ORDER NO. AD9105135C2

Service Manual

Stereo Integrated Amplifier

Amplifier

SU-VX700

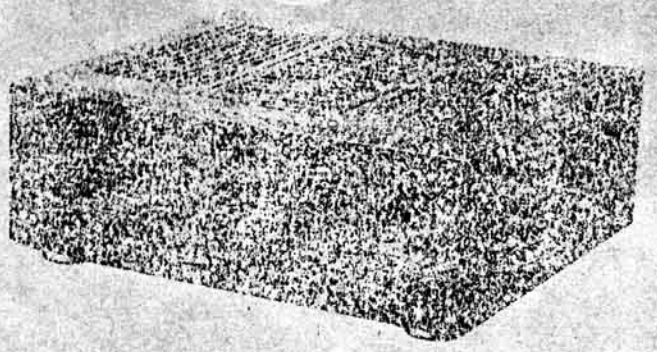

Color

(K)	Black Type

Areas

Country Code	Area	Color
(E)	Continental Europe	(K)
(EB)	Great Britain	
(EG)	F.R. Germany & Italy	

SPECIFICATIONS
(DIN 45 500)

MAIN AMP. SECTION
(POWER AMP. DIRECT Input)

20 Hz ~ 20 kHz continuous power output	
both channels driven	2 × 90 W (8 Ω)
1 kHz continuous power output	
both channels driven (THD 1%)	2 × 100 W (8 Ω)
	2 × 135 W (4 Ω)
63 Hz ~ 12.5 kHz continuous power output	
both channels driven (THD 0.7%)	2 × 90 W (8 Ω)
	2 × 125 W (4 Ω)
Total harmonic distortion	
rated power at 20 Hz ~ 20 kHz	0.007% (8 Ω)
half power at 20 Hz ~ 20 kHz	0.005% (8 Ω)
half power at 1 kHz	0.0009% (8 Ω)
	0.002% (4 Ω)
Intermodulation distortion (50 Hz: 7 kHz = 4:1, SMPTE)	
rated power	0.007 % (8 Ω)
Residual hum and noise	0.2 mV
Damping factor	80 (8 Ω), 40 (4 Ω)
Headphones output level/impedance	585 mV/330 Ω
Load impedance	
A or B, BI-WIRING	4 ~ 16 Ω
A and B	8 ~ 16 Ω

PRE AMP. SECTION

Input sensitivity/impedance	
PHONO MM	2.5 mV/47 kΩ
MC	250 μV/220 Ω
TUNER, CD, AUX, TAPE 1, TAPE 2/DAT	150 mV/22 kΩ
POWER AMP. DIRECT	1 V/18 kΩ
Phono maximum input voltage (1 kHz, RMS)	
MM	170 mV
MC	15 mV
S/N (Rated power 4 Ω)	
PHONO MM	79 dB (86 dB, IHF '66)
MC	68 dB (69 dB, IHF '66)
TUNER, CD, AUX, TAPE 1, TAPE 2/DAT	97 dB (100 dB, IHF '66)
POWER AMP. DIRECT	106 dB (115 dB, IHF '66)
S/N at −26 dB power (4 Ω)	
PHONO MM	77 dB
MC	67 dB
TUNER, CD, AUX, TAPE 1, TAPE 2/DAT	81 dB
S/N at 50 mW power (4 Ω)	
PHONO MM	75 dB
MC	67 dB
TUNER, CD, AUX, TAPE 1, TAPE 2/DAT	79 dB
Frequency response	
PHONO MM	RIAA standard curve ±0.8 dB (30 Hz ~ 15 kHz)
TUNER, CD, AUX, TAPE 1, TAPE 2/DAT	3 Hz ~ 100 kHz (+0, −3 dB)
	+0 dB, −0.2 dB (30 Hz ~ 20 kHz)
POWER AMP. DIRECT	3 Hz ~ 120 kHz (+0, −3 dB)
	+0 dB, −0.2 dB (20 Hz ~ 20 kHz)
Tone controls	
BASS	50 Hz, +10 ~ −10 dB
TREBLE	20 kHz +10 ~ −10 dB
Muting	−20 dB
Subsonic filter	20 Hz, −12 dB/oct
Loudness control (volume at −30 dB)	50 Hz, +9 dB
Output voltage/impedance	
TAPE 1, TAPE 2/DAT REC OUT	150 mV
Channel balance (AUX 250 Hz ~ 6.3 kHz)	±1 dB
Channel separation (AUX 1 kHz)	50 dB

GENERAL

Power consumption	590 W
Power supply	
For Great Britain:	AC 50 Hz/60 Hz, 240 V
For Others:	AC 50 Hz/60 Hz, 230 V
Dimensions (W × H × D)	430 × 158 × 429 mm (16-15/16" × 6-7/32" × 16-29/32")
Weight	14.0 kg (30.3 lb.)

Notes:

1. Specifications are subject to change without notice. Weight and dimensions are approximate.
2. Total harmonic distortion is measured by the digital spectrum analyzer.

Technics

■ SCHEMATIC DIAGRAM (Parts list on pages 25~27.)

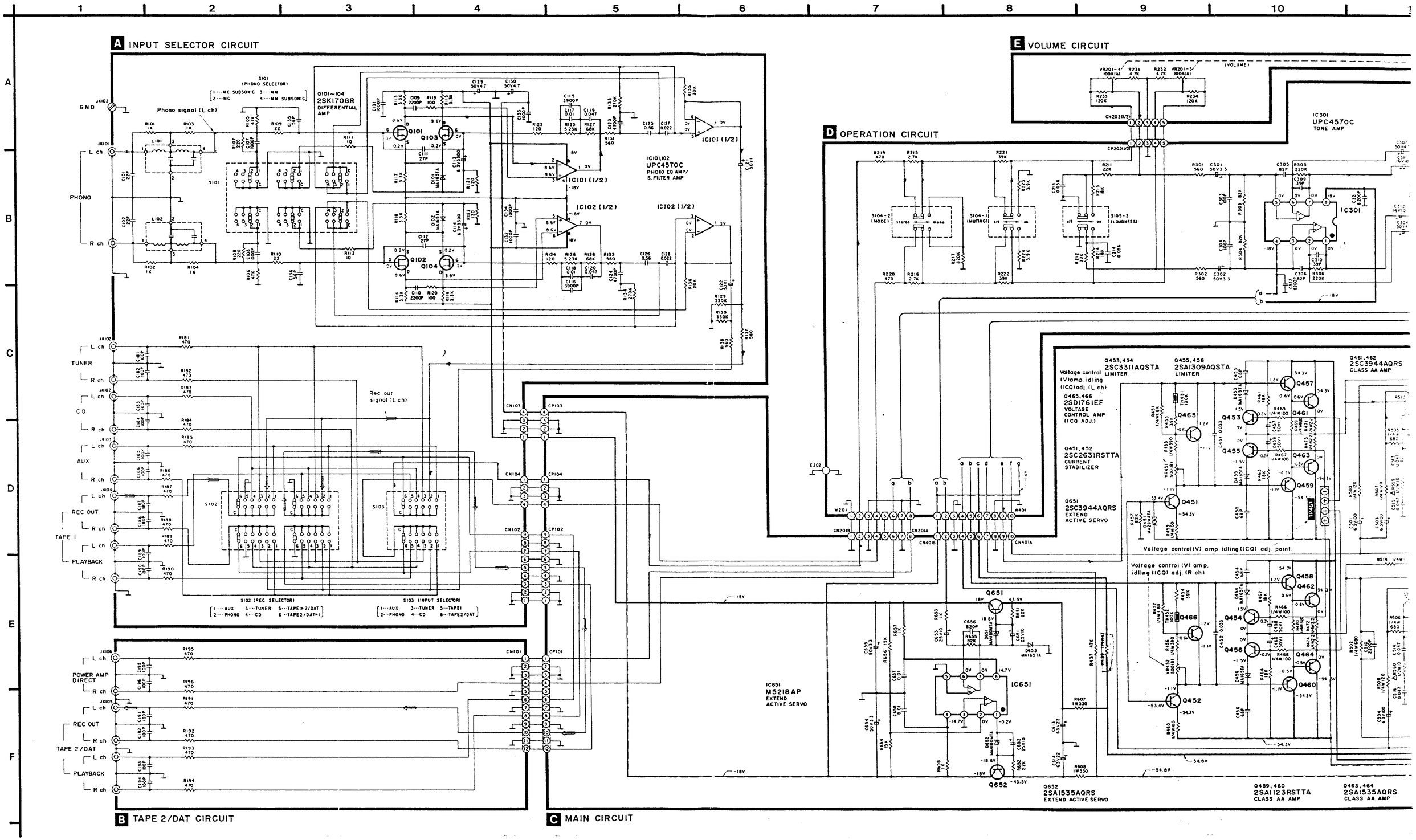

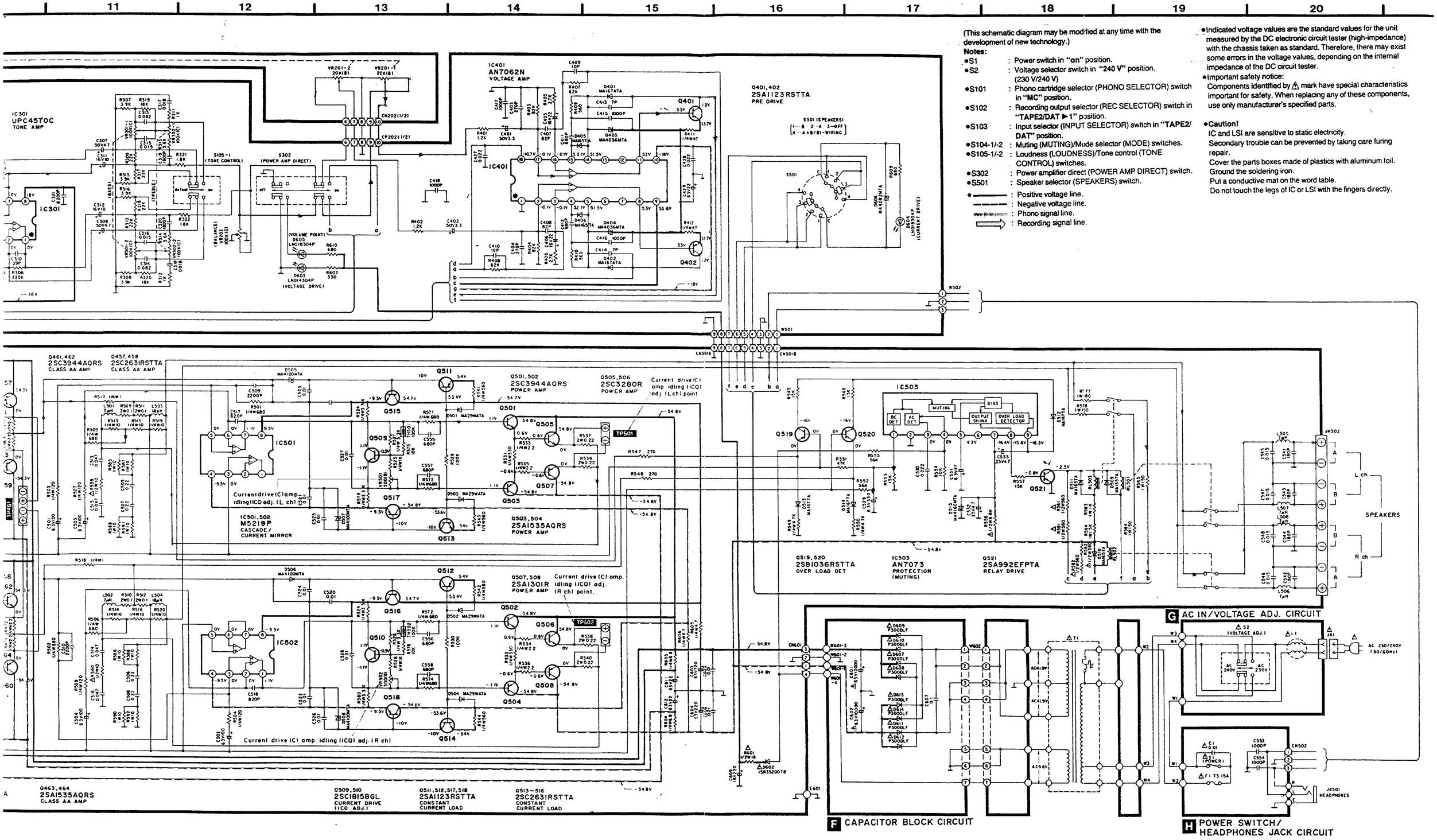

(This schematic diagram may be modified at any time with the development of new technology.)

Notes:

- •S1 : Power switch in "on" position.
- •S2 : Voltage selector switch in "240 V" position. (230 V/240 V)
- •S101 : Phono cartridge selector (PHONO SELECTOR) switch in "MC" position.
- •S102 : Recording output selector (REC SELECTOR) switch in "TAPE2/DAT ▶1" position.
- •S103 : Input selector (INPUT SELECTOR) switch in "TAPE2/DAT" position.
- •S104-1/-2 : Muting (MUTING)/Mude selector (MODE) switches.
- •S105-1/-2 : Loudness (LOUDNESS)/Tone control (TONE CONTROL) switches.
- •S302 : Power amplifier direct (POWER AMP DIRECT) switch.
- •S501 : Speaker selector (SPEAKERS) switch.
- ●——— : Positive voltage line.
- ——— : Negative voltage line.
- ——— : Phono signal line.
- ⇨ : Recording signal line.

- •Indicated voltage values are the standard values for the unit measured by the DC electronic circuit tester (high-impedance) with the chassis taken as standard. Therefore, there may exist some errors in the voltage values, depending on the internal impedance of the DC circuit tester.
- •Important safety notice:
  Components identified by ⚠ mark have special characteristics important for safety. When replacing any of these components, use only manufacturer's specified parts.
- •Caution!
  IC and LSI are sensitive to static electricity.
  Secondary trouble can be prevented by taking care furing repair.
  Cover the parts boxes made of plastics with aluminum foil.
  Ground the soldering iron.
  Put a conductive mat on the word table.
  Do not touch the legs of IC or LSI with the fingers directly.

PRINTED CIRCUIT BOARDS (Parts list on pages 25~27.)

C MAIN P.C.B.

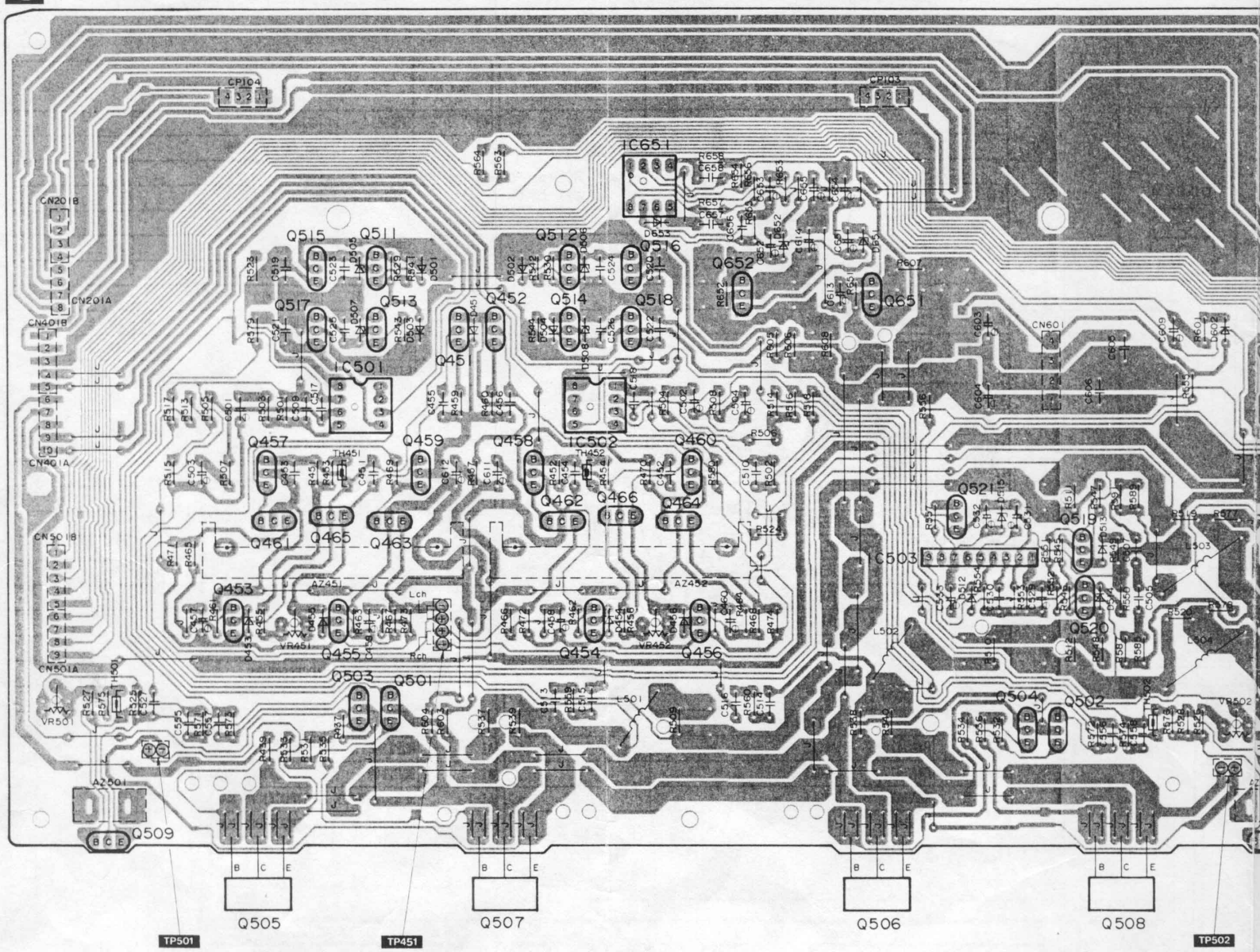

G AC IN/VOLTAGE ADJ. P.C.B.

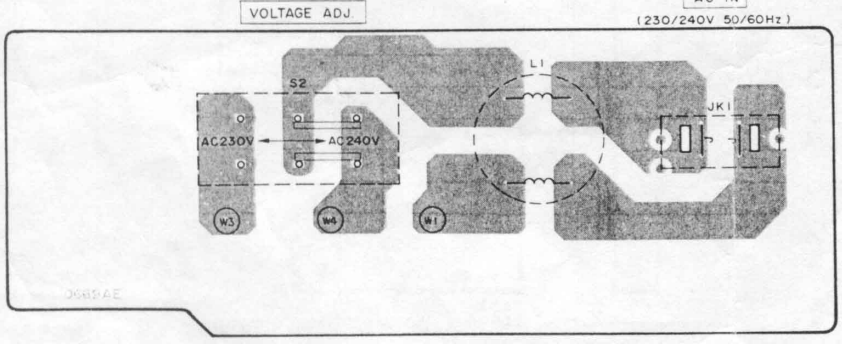

6 7 8 9 10 11

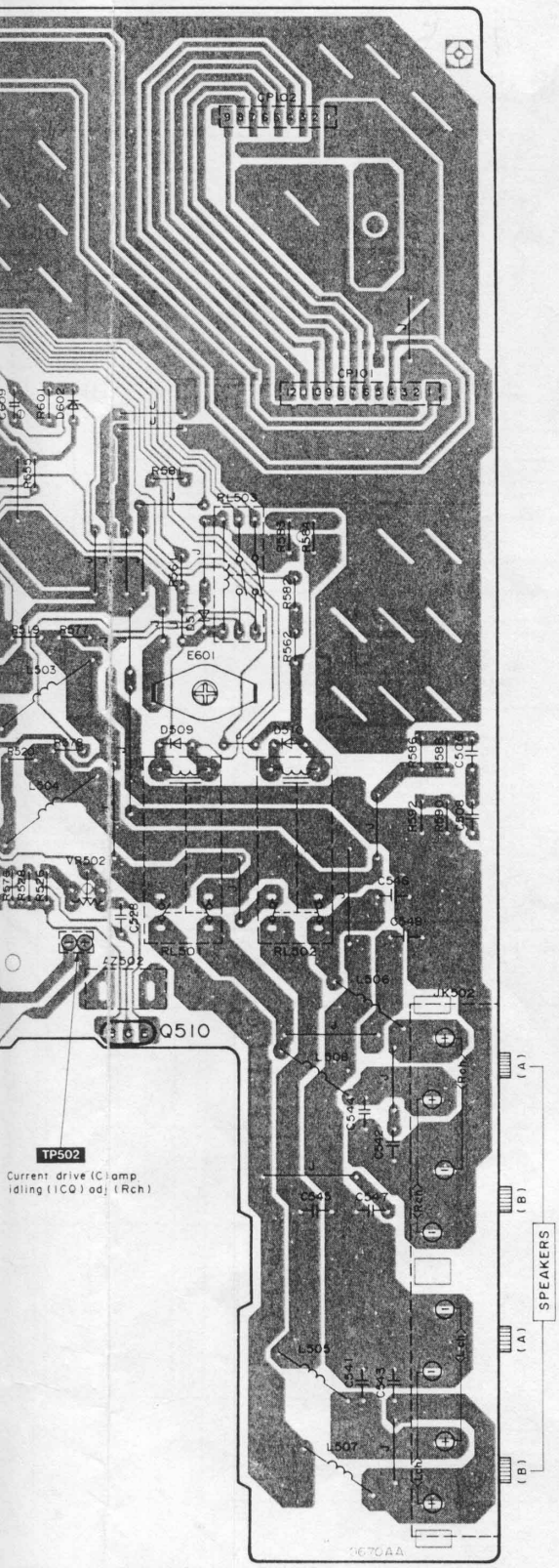

A INPUT SELECTOR P.C.B.

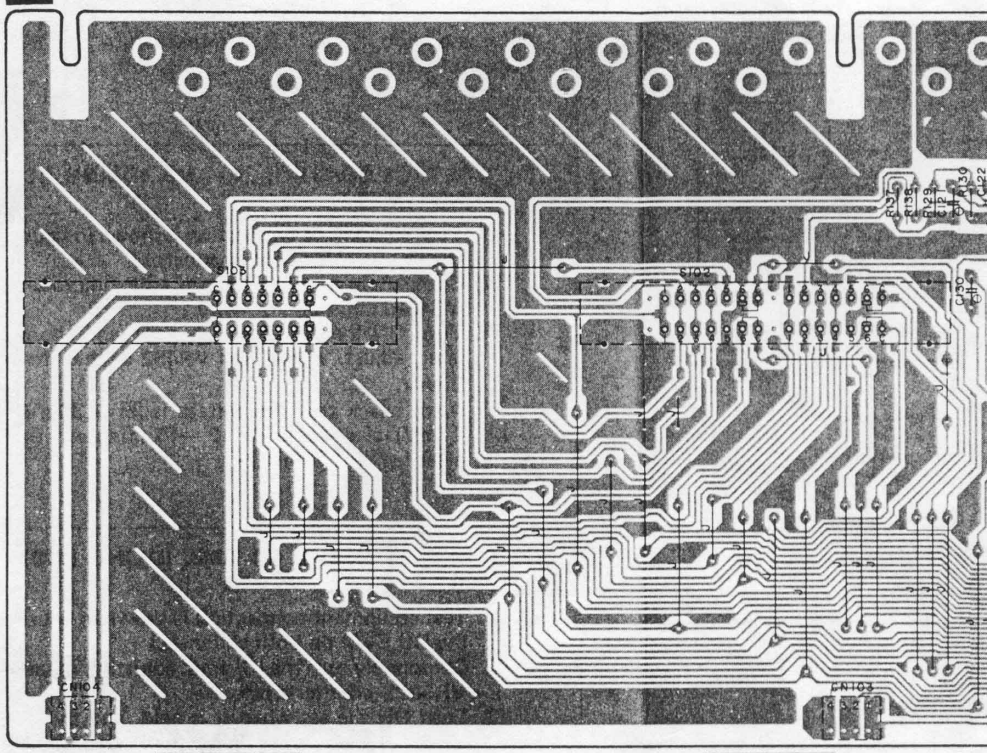

(S103) INPUT SELECTOR
1···AUX 3···TUNER 5···TAPE1
2···PHONO 4···CD 6···TAPE2/DAT

(S102) REC SELECTOR
1···AUX 3···TUNER 5···TAPE1▶2/DAT
2···PHONO 4···CD 6···TAPE2/DAT▶1

D OPERATION P.C.B.

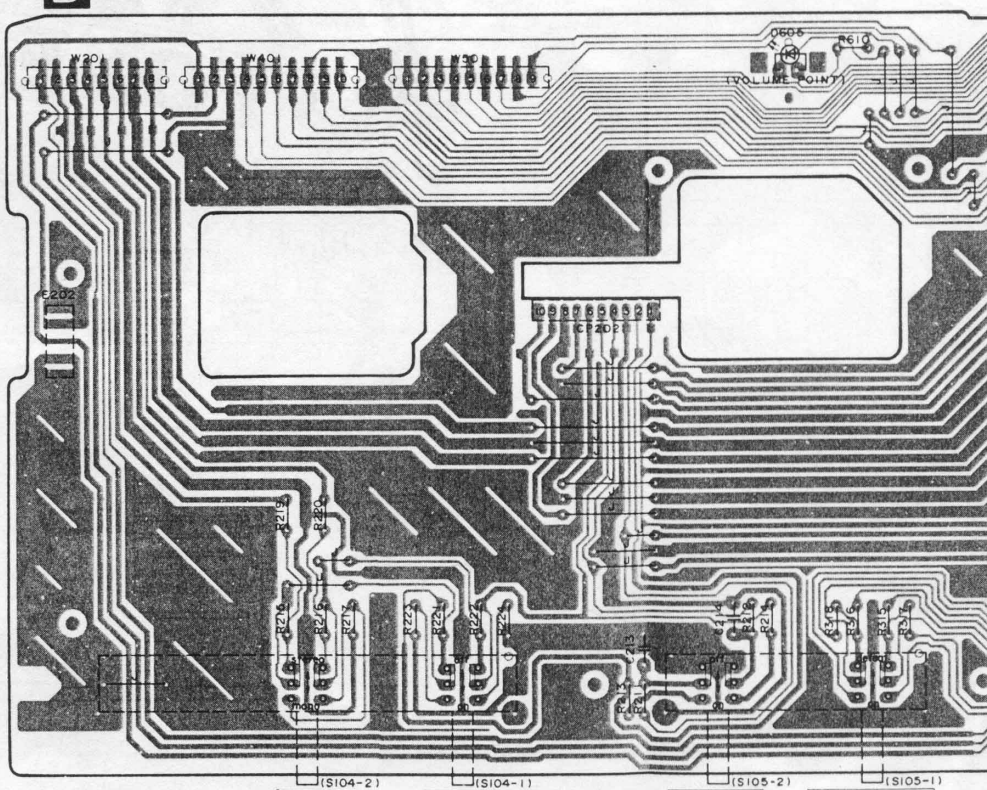

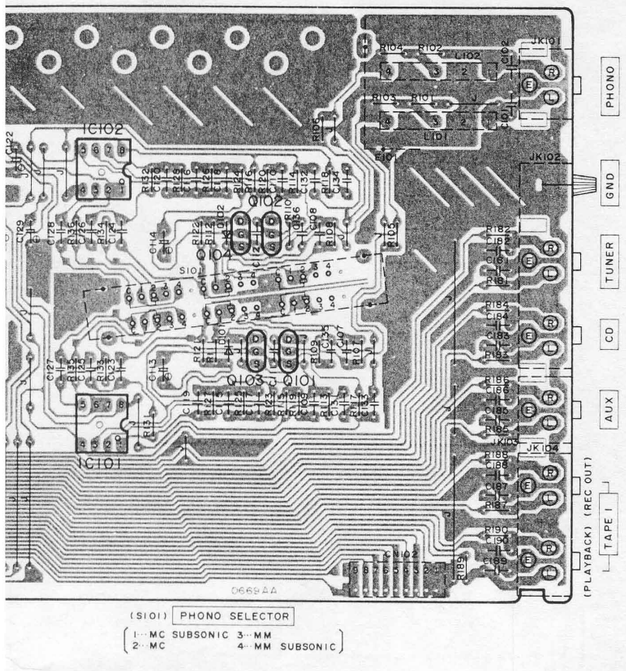

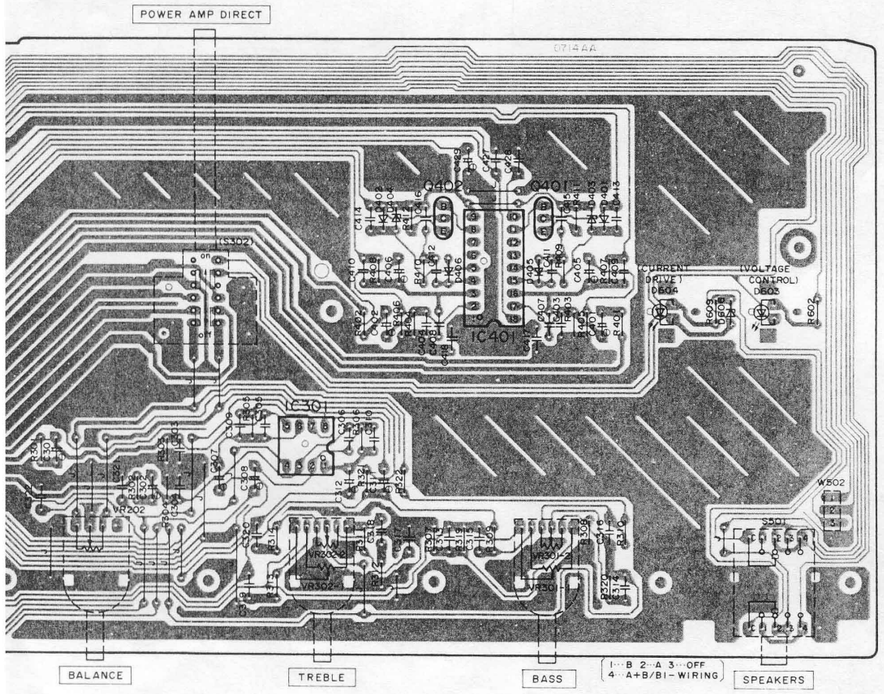

F CAPACITOR BLOCK P.C.B.

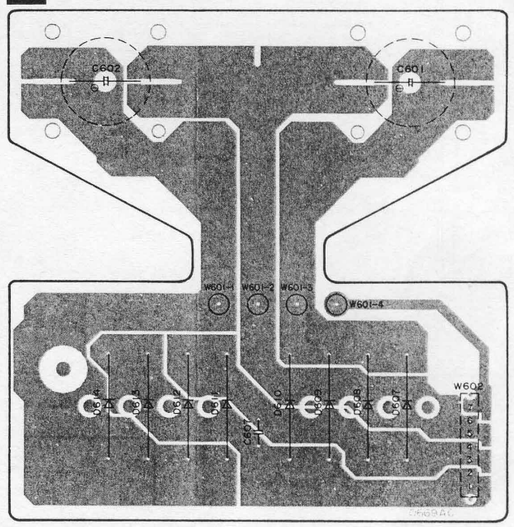

E VOLUME P.C.B.

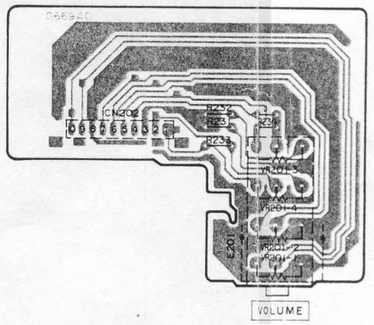

B TAPE2/DAT P.C.B.

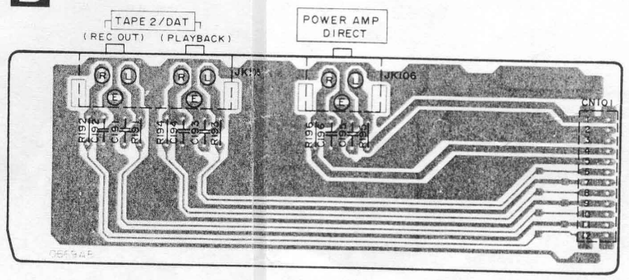

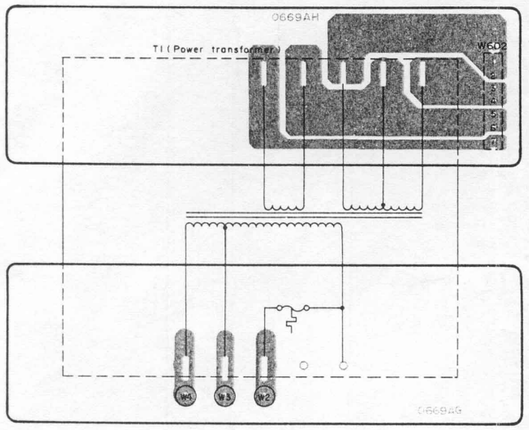

H POWER SWITCH/HEADPHONES JACK P.C.B.

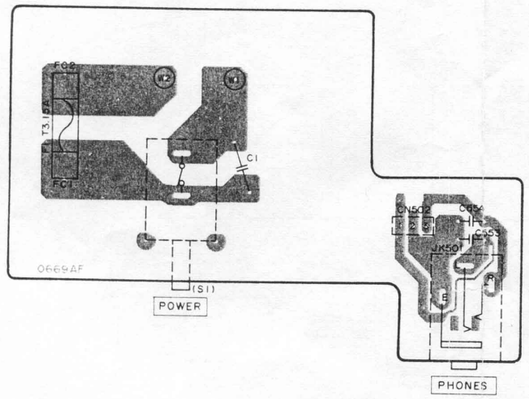

•Terminal guide of IC's, transistors and diodes

M5218AP	M5219P	UPC4570C 8 pin AN7062N 18 pin
AN7073	2SA1309AQSTA 2SB1036RSTTA 2SC3311AQSTA	
2SA992EFPTA 2SA1123RSTTA 2SC1815BGL 2SC2631RSTTA		2SK170GR
2SA1535AQRS 2SC3944AQRS 2SD1761EF		2SA1301R 2SC3280R
1SR35200TB MA165TA MA167TA MA167ATA MA29WATA		MA4036MTA MA4082MTA
MA4100MTA MA4160MTA MA4180MTA	P300DLF	LN014304P LN018304P

■ WIRING CONNECTION DIAGRAM

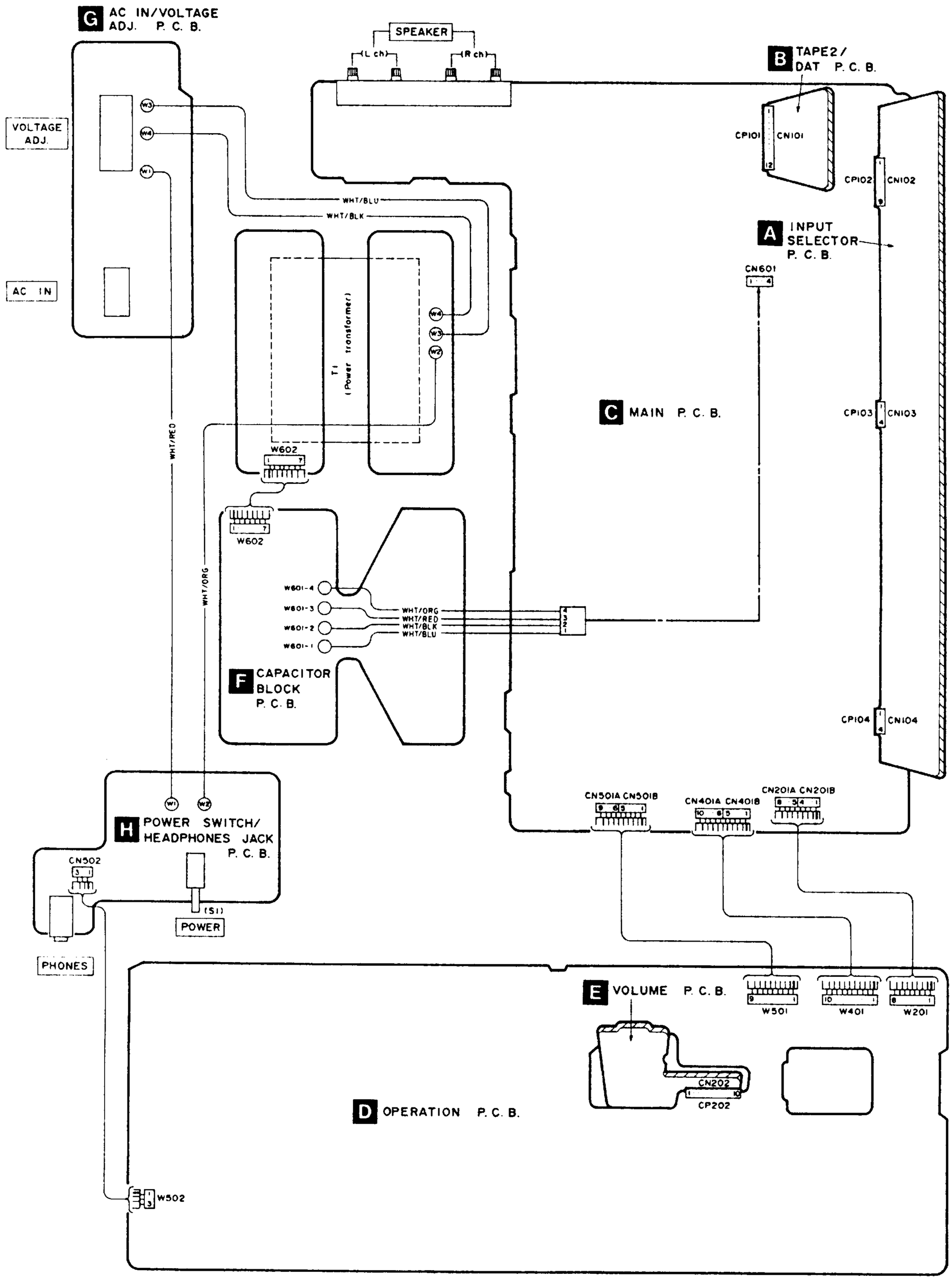

■ CONTENTS

	Page
BEFORE REPAIR AND ADJUSTMENT	2
PROTECTION CIRCUITRY	2
ACCESSORY	2
LOCATION OF CONTROLS	3, 4
CONNECTIONS	4~6
DISASSEMBLY INSTRUCTIONS	7~10
SCHEMATIC DIAGRAM	11~14
PRINTED CIRCUIT BOARDS	15~18
WIRING CONNECTION DIAGRAM	19
BLOCK DIAGRAM	20
MEASUREMENTS AND ADJUSTMENTS	21
REPLACEMENT PARTS LIST	22, 25~27
CABINET PARTS LOCATION	23, 24
PACKING	25

■ BEFORE REPAIR AND ADJUSTMENT

(1) Turn off the power supply. Using a 10Ω, 10 W resistor, shortcircuit both ends of power supply capacitors (C601, C602) in order to discharge the voltage.

(2) Before turning on the power switch of the unit.

A. Connect the voltage controller to the primary side.

B. Connect the AC ampere meter to the primary side or connect the DC voltage meter to the "±B" circuit of the secondary side.

C. Turn the VR of ICQ (VR451, VR452, VR501 and VR502) to minimum (counterclockwise).

D. After setting the output to zero of the voltage controller, turn on the power switch of the unit.
And increase the output of voltage controller gradually.
Then, check carefully whether the current value of primary side become more than following value or whether the DC voltage of secondary side is increasing slowly.

E. If the value of current is increasing unusually or the DC voltage is not increasing, lower the output level of voltage controller immediately.

●The current value of the primary side at no signal. (Confirm the power supply voltage of each area and provided voltage of the unit.)

Power supply voltage		AC 230 V	AC 240 V
Consumed current	50 Hz	110~210 mA	100~200 mA
	60 Hz	——	——

■ PROTECTION CIRCUITRY

The protection circuitry of the amplifier may have operated if either of the following conditions is noticed:
●No sound is heard when the power is turned on.
●Sound stops during a performance.
The function of this circuitry is to prevent circuitry damage if, for example, the positive and negative speaker connection wires are "shorted", or if speaker systems with an impedance less than the indicated rated impedance of the amplifier are used.

If this occurs, follow the procedure outlined below:
1. Turn off the power.
2. Determine the cause of the problem and correct it.
3. Turn on the power once again.

Note:
When the protection circuitry functions, the unit will not operate unless the power is first turned off and then on again.

■ ACCESSORY

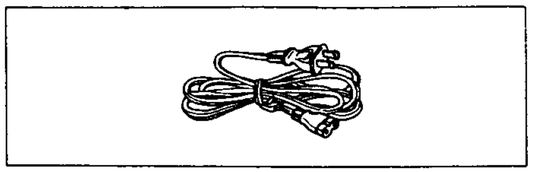

●AC power supply cords 1
<SFDAC05E03> For (E), (EG) areas.
<SJA193> For (EB) area only.

■ BLOCK DIAGRAM

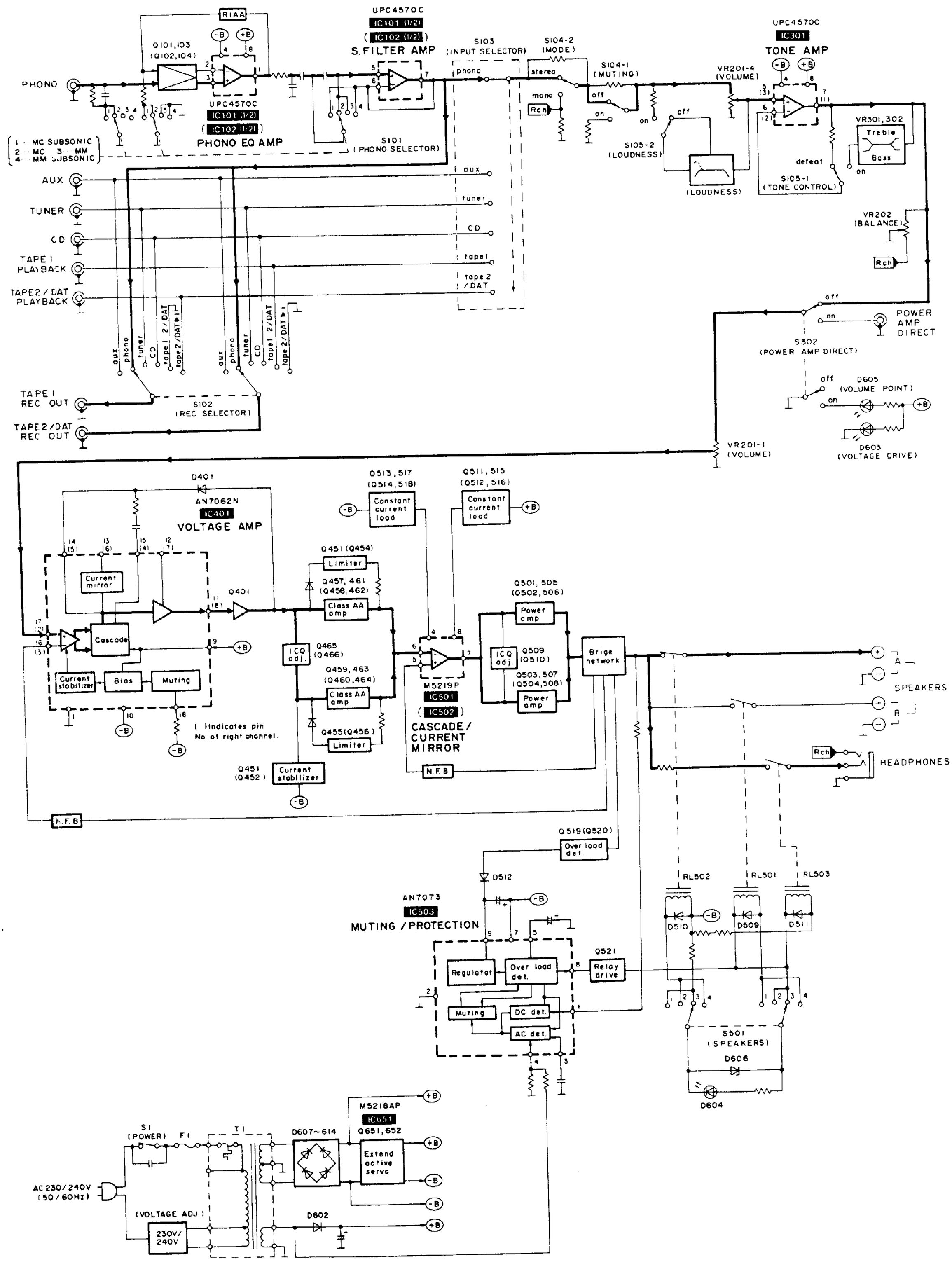

■ MEASUREMENTS AND ADJUSTMENTS

•ADJUSTMENT

Control positions and equipment used.

- Volume knob . . . . . ∞ (Minimum)
- Speaker selector . . . . . off
- AC and DC electronic voltmeter (EVM)

(1) VOLTAGE CONTROL (V) AMP. IDLING (ICQ) ADJUSTMENT

1. Test equipment connection is shown in figure. (Connect the DC EVM on both channels.)
2. Completely turn the (V) amp. adjusting volumes **(VR451, VR452)** counter-clockwise.
3. Turn ON the set when it is cold, and about 5 ~ 7 sec. later, adjust **VR451** and **VR452** so that the voltage is **25mV**.
   Also, check that the voltage is **25 ~ 30mV** (standard: **27mV**) after lapse of **10 –15 minutes.** (Below **50mV** after lapse of **20min.**).

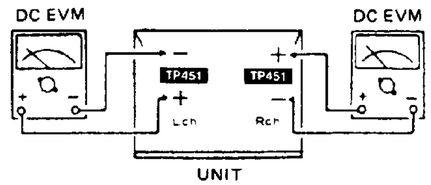

(2) CURRENT DRIVE (C) AMP. IDLING (ICQ) ADJUSTMENT

1. Test equipment connection is shown in figure. (Connect the DC EVM on both channels.)
2. Completely turn the (C) amp. adjusting volumes **(VR501, VR502)** counter-clockwise.
3. Turn ON the set when it is cold, and the "VOLTAGE CONTROL (V) AMP. IDLING (ICQ) ADJUSTMENT" later, adjust **VR501** and **VR502** so that the voltage is **3mV**.
   Also, check that the voltage is **4 ~ 7mV** (standard: **5mV**) after lapse of **10 – 15 minutes.** (Below **15mV** after lapse of **20 min.**).

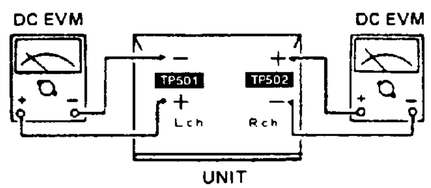

•ADJUSTMENT POINTS

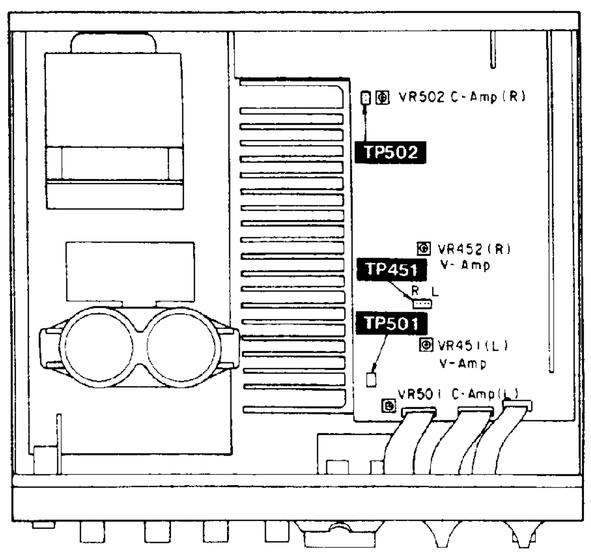

TP502 (C-amp)

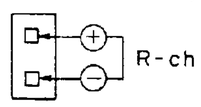

TP451 (V-amp)

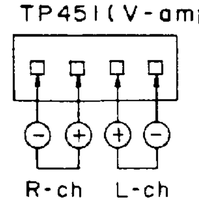

TP501 (C-amp)

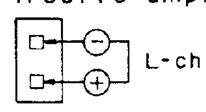

■ REPLACEMENT PARTS LIST

Notes : • Important safety notice:
Components identified by ⚠ mark have special characteristics important for safety. When replacing any of these components use only manufacturer's specified parts.
• The parenthesized indications in the Remarks columns specify the areas. (Refer to the cover page for area.)
Parts without these indications can be used for all areas.

Ref. No.	Part No.	Part Name & Description	Remarks
		CABINET PARTS LIST	
1	RGK0397-K	UPPER PLATE	
2	RGW0122-K	KNOB, VOLUME	
3	RGW0123-K	KNOB, REC. /INPUT	
4	RGW0124-K	KNOB, TONE/PHONO/S. P. SEL.	
5	RKM0172-K	CABINET	
6	SJPA11-1	SHORT PIN	
7	SNE2129-1	SCREW	
8	XTBS3+8JFZ1	SCREW	
9	XTW3+8T	SCREW	
10	RWJ3908170QQ	CABLE ASS'Y(8P) (W201)	
11	RWJ3910170QQ	CABLE ASS'Y(10P) (W401)	
12	RWJ3909170QQ	CABLE ASS'Y(9P) (W501)	
13	RWJ3907150QQ	CABLE ASS'Y(7P) (W602)	
14	RGR0124A-A	REAR PANEL	(E)
14	RGR0124A-C	REAR PANEL	(EB)
14	RGR0124A-B	REAR PANEL	(EG)
15	RGU0030	BUTTON, POWER	
16	RGU0609-K	BUTTON	
17	RHN90001	NUT	
18	RFKJUVX800EK	BOTTOM BOARD ASS'Y	
18-1	RKA0009-1	FOOT	
19	RKU0036	BOTTOM PLATE	
20	RMA0476	ANGLE	
21	RMA0477	ANGLE	
22	RMA0478	ANGLE	
23	RMA0484	ANGLE	
24	RMQ0239	ANGLE	
25	RMQ0240	ANGLE	
26	RMQ0255	ANGLE	
27	RSQ0019	REMOTE SWITCH(INPUT)	
28	RSQ0020	REMOTE SWITCH(REC.)	
29	RSQ0021	REMOTE SWITCH(PHONO)	
30	RGK0393-K	VOLUME ORNAMENT	
31	RGK0394-A	RING	
32	RFKGUVX700EK	FRONT PANEL ASS'Y	
33	RGK0398-K	SIDE ORNAMENT(R)	
34	RGK0399-K	SIDE ORNAMENT(L)	
35	RGL0134-C	ORNAMENT	
37	RGL0136-C	ORNAMENT	
38	RGU0611-K	BUTTON, DIRECT	
39	RMR0460-K	HOLDER	
40	RMR0461-K	HOLDER	
41	XTBS26+8J	SCREW	
42	SHE187-2	SPACER	

Ref. No.	Part No.	Part Name & Description	Remarks
43	SHR9814	CLUMPER	
44	SJS9231A	AC INLET COVER	
45	SNE2117-1	SCREW	
46	XTB3+20JFZ	SCREW	
47	XTB4+10FFZ	SCREW	
48	XTWS3+8T	SCREW	
51	RWJ3903070XK	CABLE ASS'Y(3P) (W502)	
52	RJS1A3404	SOCKET(4P)	
53	SJS5331	SOCKET(3P)	
55	SJT783	TERMINAL	
56	RJT053	TERMINAL	
57	SUS227	SPRING (AZ501, 502)	
		PACKING MATERIALS	
P1	RPG0941	PACKING CASE	
P2	RPN0511	PAD	
P3	SPH223	PROTECTION SHEET(A)	
P4	SPH6434	PROTECTION SHEET(B)	
P5	SPSD152	ACCESSORY BOX	
P6	SPB1061	PROTECTION COVER(MANUAL)	
		ACCESSORIES	
A1	RQF1147	INSTRUCTIONS MANUAL ASS'Y	(E)
A1	RQF1148	INSTRUCTIONS MANUAL ASS'Y	(EB)
A1	RQF1149	INSTRUCTIONS MANUAL ASS'Y	(EG)
A1-1	RFKSUVX800EK	INSTRUCTIONS MANUAL ASS'Y	(E)
A1-1	RQT1060-B	INSTRUCTIONS MANUAL	(EB)
A1-1	RQT1061-D	INSTRUCTIONS MANUAL	(EG)
A1-2	RQA0013	WARRANTY CARD	
A1-3	RQCB0169	SERVICE CENTER LIST	
A2	SFDAC05E03	AC POWER SUPPLY CORD	⚠(E, EG)
A2	SJA193	AC POWER SUPPLY CORD	⚠(EB)

■ CABINET PARTS LOCATION

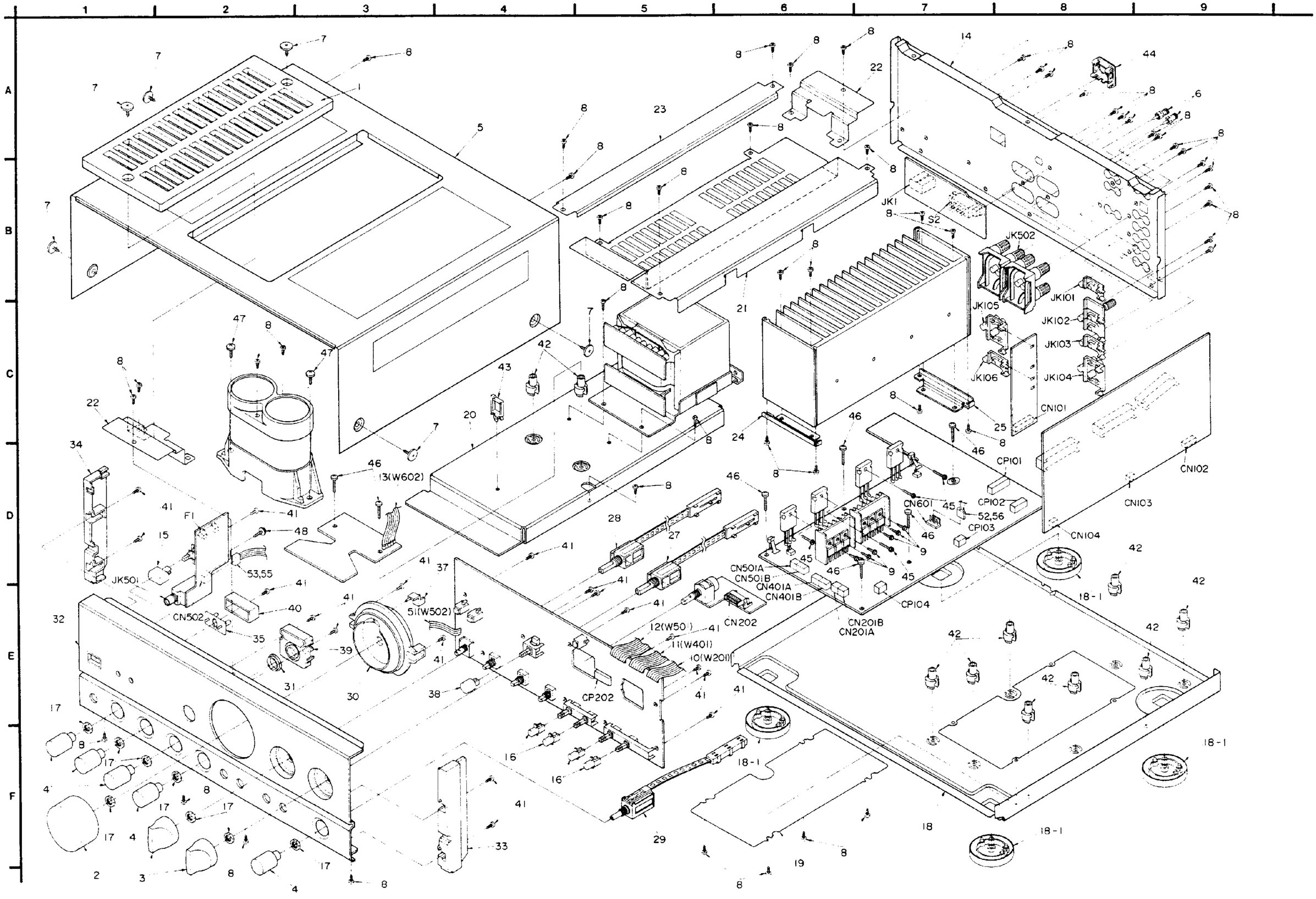

Ref. No.	Part No.	Part Name & Description	Remarks
		INTEGRATED CIRCUIT(S)	
IC101, 102	UPC4570C	I. C. PHONO/EQ. AMP.	
IC301	UPC4570C	I. C. TONE AMP.	
IC401	AN7062N	I. C. BUFFER AMP.	
IC501, 502	M5219P	I. C. ACTIVE SERVO	
IC503	AN7073	I. C. POWER AMP.	
IC651	M5218AP	I. C. BUFFER AMP.	
		TRANSISTOR(S)	
Q101-104	2SK170GR	TRANSISTOR	
Q401, 402	2SA1123RSTTA	TRANSISTOR	
Q451, 452	2SC2631RSTTA	TRANSISTOR	
Q453, 454	2SC3311A-Q	TRANSISTOR	
Q455, 456	2SA1309A-R	TRANSISTOR	
Q457, 458	2SC2631RSTTA	TRANSISTOR	
Q459, 460	2SA1123RSTTA	TRANSISTOR	
Q461, 462	2SC3944AQRS	TRANSISTOR	
Q463, 464	2SA1535AQRS	TRANSISTOR	
Q465, 466	2SD1761EF	TRANSISTOR	
Q501, 502	2SC3944AQRS	TRANSISTOR	
Q503, 504	2SA1535AQRS	TRANSISTOR	
Q505, 506	2SC3280R	TRANSISTOR	
Q507, 508	2SA1301R	TRANSISTOR	
Q509, 510	2SC1815BG	TRANSISTOR	
Q511, 512	2SA1123RSTTA	TRANSISTOR	
Q513-516	2SC2631RSTTA	TRANSISTOR	
Q517, 518	2SA1123RSTTA	TRANSISTOR	
Q519, 520	2SB1036R	TRANSISTOR	
Q521	2SA992EFPTA	TRANSISTOR	
Q651	2SC3944AQRS	TRANSISTOR	
Q652	2SA1535AQRS	TRANSISTOR	
		DIODE(S)	
D101, 102	MA165	DIODE	
D401, 402	MA167	DIODE	
D403, 404	MA4036MTA	DIODE	
D405, 406	MA165	DIODE	
D451	MA29WA	DIODE	
D453-456	MA165	DIODE	
D501-504	MA29WA	DIODE	
D505-508	MA4100MTA	DIODE	
D509-511	MA165	DIODE	
D512-514	MA167	DIODE	
D515	MA4160M	DIODE	
D602	1SR35200TB	DIODE	⚠
D603	LN014304P	L. E. D.	
D604, 605	LN018304P	L. E. D.	
D606	MA4082MTA	DIODE	

Ref. No.	Part No.	Part Name & Description	Remarks
D607-614	P300DLF	DIODE	⚠
D651, 652	MA4180-M	DIODE	
D653	MA165	DIODE	
		VARIABLE RESISTOR(S)	
VR201	RRV16J02A	V. R. VOLUME CONTROL	
VR202	EVJ02QFA2G15	V. R. BALANCE	
VR301, 302	EVJYA1FA2C15	V. R. BASS/TREBLE CONT.	
VR451, 452	EVNDXAA00B52	V. R. ICQ ADJ. (V-AMP.)	
VR501, 502	EVNDXAA00B52	V. R. ICQ ADJ. (C-AMP.)	
		THERMISTOR(S)	
TH451, 452	ERTD2ZHL104T	THERMISTOR	
TH501, 502	ERTD2ZHL104T	THERMISTOR	
		COIL(S)	
L1	SLQZ650MH49	COIL	⚠
L101, 102	SLM1Z33	COIL	
L501, 502	SLQY07G-40	COIL	
L503, 504	SLQY18G-10	COIL	
L505-508	SLQY07G-40	COIL	
		TRANSFORMER(S)	
T1	RTP1Q5E005-W	POWER TRANSFORMER	⚠
		FUSE(S)	
F1	XBA2C31TB0	FUSE, 250V T3.15A	⚠
		SWITCH(ES)	
S1	ESB8249V	SW, POWER	⚠
S2	ESD26200A	SW, VOLTAGE SELECTOR	⚠
S101	RSS4F001-A	SW, PHONO SELECTOR	
S102	RSS6D001	SW, REC SELECTOR	
S103	RSS6B001	SW, INPUT SELECTOR	
S104	ESB68133	SW, MUTING/MODE	
S105	ESB68130	SW, LOUDNESS/TONE	
S302	RSP2D008-A	SW, POWER AMP DIRECT	
S501	RSR4B004-A	SW, SPEAKER SELECTOR	
		CONNECTOR(S)	
CN101	RJU057W012	SOCKET(12P)	
CN102	RJU057W009	SOCKET(9P)	
CN103, 104	RJU057W004	SOCKET(4P)	
CN202	RJU003K010M1	SOCKET(10P)	
CN502	SJT3321	CONNECTOR(3P)	

Ref. No.	Part No.	Part Name & Description	Remarks
CN601	RJP1A3404	CONNECTOR(4P)	
CN201A	RJS1A1704	SOCKET(4P)	
CN401A	RJS1A1705	CONNECTOR(5P)	
CN501A	RJS1A1704	SOCKET(4P)	
CN201B	RJS1A1704	SOCKET(4P)	
CN401B	RJS1A1705	CONNECTOR(5P)	
CN501B	RJS1A1705	CONNECTOR(5P)	
CP101	RJT057W012	CONNECTOR(12P)	
CP102	RJT057W009	CONNECTOR(9P)	
CP103, 104	RJT057W004	CONNECTOR(4P)	
CP202	RJT003K010M1	CONNECTOR(10P)	
		JACK(S)	
JK1	SJS8231-1B	AC INLET	⚠
JK101	SJF3068N	PHONO JACK	
JK102	SJF3067N	TUNER/CD JACK	

Ref. No.	Part No.	Part Name & Description	Remarks
JK103	SJF3068N	AUX JACK	
JK104	SJF3069N	TAPE1 JACK	
JK105	SJF3069N	TAPE2 JACK	
JK106	SJF3068N	POWER AMP DIRECT JACK	
JK501	QJA0455ZC-A	HEADPHONES JACK	
JK502	RJH4801-1	SPEAKER TERMINAL	
		FUSE HOLDER(S)	
FC1, 2	EYF52BC	FUSE HOLDER	
		RELAY(S)	
RL501, 502	SSY134	RELAY	
RL503	RSY0009-0	RELAY	

Notes : • Capacity valuse are in microfarads (uF) unless specified otherwise, P=Pico-farads(pF) F=Farads(F)
• Resistance values are in ohms, unless specified otherwise, 1K=1,000(OHM) , 1M=1,000k(OHM)

Ref. No.	Part No.	Values & Remarks
		RESISTORS
R101-104	ERDS2TJ102	1/4W 1K
R105, 106	ERDS2TJ473	1/4W 47K
R107, 108	ERDS2TJ221	1/4W 220
R109, 110	ERDS2TJ220T	1/4W 22
R111, 112	ERDS2TJ100	1/4W 10
R113-118	ERDAS3G332T	1/4W 3.3K
R119, 120	ERDS2TJ101	1/4W 100
R121-124	ERDAS3G121	1/4W 120
R125, 126	ERDS2TKF5231	1/4W 5.23K
R127, 128	ERDS2TKG6802	1/4W 68K
R129, 130	ERDS2TJ334	1/4W 330K
R131, 132	ERDAS3G561	1/4W 560
R133, 134	ERDS2TJ274	1/4W 270K
R135, 136	ERDS2TJ203T	1/4W 20K
R137, 138	ERDAS3G561	1/4W 560
R181-196	ERDAS3G471T	1/4W 470
R211, 212	ERDAS3G223T	1/4W 22K
R213, 214	ERDS2TJ183T	1/4W 18K
R215, 216	ERDS2TJ272T	1/4W 2.7K
R217	ERDS2TJ824	1/4W 820K
R219, 220	ERDAS3G471T	1/4W 470
R221, 222	ERDAS3G393T	1/4W 39K
R223, 224	ERDAS3G392T	1/4W 3.9K
R231, 232	ERDAS3G472T	1/4W 4.7K
R233, 234	ERDAS3G124T	1/4W 120K

Ref. No.	Part No.	Values & Remarks
R301, 302	ERDAS3G561	1/4W 560
R303, 304	ERDS2TJ823T	1/4W 82K
R305, 306	ERDS2TJ224T	1/4W 220K
R307, 308	ERDS2TJ392T	1/4W 3.9K
R309, 310	ERDS2TJ223	1/4W 22K
R311, 312	ERDS2TJ102	1/4W 1K
R313, 314	ERDS2TJ562	1/4W 5.6K
R315, 316	ERDAS3G392T	1/4W 3.9K
R317, 318	ERDAS3G223T	1/4W 22K
R319, 320	ERDS2TJ183T	1/4W 18K
R321, 322	ERDAS3G182	1/4W 1.8K
R401, 402	ERDS2TJ122	1/4W 1.2K
R403, 404	ERDS2TJ823T	1/4W 82K
R405, 406	ERDAS3G272T	1/4W 2.7K
R407, 408	ERDAS3G823T	1/4W 82K
R409, 410	ERDS2TJ561	1/4W 560
R411, 412	ERDFS2VJ470T	1/4W 47
R437	ERDS2TJ473	1/4W 47K
R439	ERDFS2VJ470T	1/4W 47
R451, 452	ERDFS2VJ182T	1/4W 1.8K
R453, 454	ERDS2TJ393	1/4W 39K
R455, 456	ERDFS2VJ391T	1/4W 390
R457	ERDS2TJ823T	1/4W 82K
R459, 460	ERDFS2VJ101T	1/4W 100
R461-464	ERDS2TJ183T	1/4W 18K
R465-468	ERDFS2VJ101T	1/4W 100
R469, 470	ERDFS2VJ821T	1/4W 820
R471-474	ERDFS2VJ2R2T	1/4W 2.2

Ref. No.	Part No.	Values & Remarks
R501, 502	ERDFS2VJ681T	1/4W 680
R503, 504	ERDFS2VJ121T	1/4W 120
R505, 506	ERDFS2VJ681T	1/4W 680
R507, 508	ERDFS2VJ121T	1/4W 120
R509-512	ERF2EXKR10	2W 0.1
R513-516	ERDFS2VJ100T	1/4W 10
R517, 518	ERDFS2VJ1R0T	1/4W 1
R519, 520	ERDFS2VJ100T	1/4W 10
R523, 524	ERDFS2VJ332T	1/4W 3.3K
R525, 526	ERDFS2VJ102T	1/4W 1K
R527, 528	ERDFS2VJ332T	1/4W 3.3K
R529, 530	ERDS2TJ104	1/4W 100K
R531, 532	ERDFS2VJ331T	1/4W 330
R533-536	ERDFS2VJ2R2T	1/4W 2.2
R537-540	ERF2EXKR22	2W 0.22
R541-544	ERDFS2VJ561T	1/4W 560
R545, 546	ERDS2TJ153	1/4W 15K
R547, 548	ERDFS2VJ271T	1/4W 270
R549, 550	ERDFS2VJ472T	1/4W 4.7K
R551	ERDS2TJ473	1/4W 47K
R552	ERDS2TJ563	1/4W 56K
R553	ERDS2TJ153	1/4W 15K
R554	ERDS2TJ103	1/4W 10K
R555	ERDS2TJ563	1/4W 56K
R556	ERDS1FVJ682T	1/2W 6.8K ⚠
R557	ERDS2TJ153	1/4W 15K
R559, 560	ERDS1FVJ100T	1/2W 10 ⚠
R561, 562	ERDS1FVJ561T	1/2W 560 ⚠

SU-VX700

Ref. No.	Part No.	Values & Remarks
R563, 564	ERG1SJ151E	1W 150
R571-574	ERDFS2VJ681T	1/4W 680
R575, 576	ERDS2TJ103	1/4W 10K
R577, 578	ERG1SJ181E	1W 180
R579, 580	ERDFS2VJ332T	1/4W 3.3K
R581, 582	ERDS1FVJ561T	1/2W 560 ⚠
R583	ERG1SJ102E	1W 1K
R584	ERG1SJ152E	1W 1.5K
R585-592	ERG1SJ100E	1W 10
R601	ERDS1FVJ180T	1/2W 18 ⚠
R602	ERDS2TJ331	1/4W 330
R603, 604	ERDFS2VJ6R8T	1/4W 6.8
R605, 606	ERDFS2VJ4R7T	1/4W 4.7
R607, 608	ERG1SJ331E	1W 330
R609, 610	ERDS2TJ681	1/4W 680
R651, 652	ERDS2TJ223	1/4W 22K
R653	ERDS2TJ102	1/4W 1K
R654	ERDS2TJ153	1/4W 15K
R655	ERDS2TJ823T	1/4W 82K
R656	ERDS2TJ153	1/4W 15K
R657, 658	ERDS2TJ102	1/4W 1K
		CAPACITORS
C1	ECKWNS103ZVS	500V 0.01U ⚠
C101, 102	ECBT1H220J5	50V 22P
C107, 108	ECQB1H102KF3	50V 1000P
C109, 110	ECQB1H222JF3	50V 2200P
C111, 112	ECBT1H270JU5	50V 27P
C113, 114	ECA0JAP332E	6.3V 3300P
C115, 116	ECQB1H392JF3	50V 3900P
C117, 118	ECQB1H103JF3	50V 0.01U
C119, 120	ECQV1H473JZ3	50V 0.047U
C121, 122	ECA1HPXS010B	50V 1U
C123, 124	ECQB1H472JF3	50V 4700P
C125, 126	ECQV1H564JZ3	50V 0.56U
C127, 128	ECQB1H223JF3	50V 0.022U
C129, 130	ECA1HPXS4R7B	50V 4.7U
C131-134	ECQB1H102KF3	50V 1000P
C135, 136	ECBT1H560J5	50V 56P
C181-186	ECCR1H101K5	50V 100P
C187, 188	ECCR1H181K5	50V 180P
C189, 190	ECCR1H101K5	50V 100P
C191, 192	ECBT1H181KB5	50V 180P
C193-196	ECCR1H101K5	50V 100P
C213, 214	ECQV1H563JZ3	50V 0.056U
C301, 302	ECA1HPXS3R3B	50V 3.3U
C303, 304	ECBT1H101KB5	50V 100P
C305, 306	ECBT1H820KB5	50V 82P
C307, 308	ECA1HPXS4R7B	50V 4.7U
C309, 310	ECBT1H390J5	50V 39P
C311, 312	ECA1CPXS100B	16V 10U

Ref. No.	Part No.	Values & Remarks
C313, 314	ECQV1H823JZ	50V 0.082U
C315, 316	ECQB1H153JF3	50V 0.015U
C317, 318	ECQB1H183JF3	50V 0.018U
C319, 320	ECQB1H182JF3	50V 1800P
C321, 322	ECQB1H822JF3	50V 8200P
C401, 402	ECA1HPXS3R3B	50V 3.3U
C403, 404	ECBT1H271KB5	50V 270P
C405, 406	ECA1CPXS220B	16V 22U
C407, 408	ECBT1H820KB5	50V 82P
C409, 410	ECBT1H100J5	50V 10P
C411, 412	ECBA1H681KB5	50V 680P
C413, 414	ECCV2HD70D	500V 7P
C415-418	ECBT1H102KB5	50V 1000P
C427, 428	ECQB1H223JF3	50V 0.022U
C429	ECA1JAP220B	63V 22U
C451, 452	ECKR1H3332F5	50V 0.033U
C453-456	ECCV2H680K	500V 68P
C457-460	ECEA1HKA010B	50V 1U
C501-504	ECA0JPXS101B	6.3V 100U
C505-508	ECQM1H224JZ	50V 0.22U
C509, 510	ECQB1H222JF3	50V 2200P
C513-516	ECKR1H4732F5	50V 0.047U
C517, 518	ECBT1H821KB5	50V 820P
C519-528	ECKR1H103ZF5	50V 0.01U
C529	ECEA0JKA331Q	6.3V 330U
C530	ECFR1E223KR	25V 0.022U
C531	ECEA0JKA470B	6.3V 47U
C532, 533	ECEA1EKA4R7B	25V 4.7U
C541-544	ECCR1H181K5	50V 180P
C545-548	ECQB1H153KF3	50V 0.015U
C553, 554	ECKT1H102KB	50V 1000P
C555-558	ECBA1H681KB5	50V 680P
C601, 602	ECED1JM103T	63V 10000U ⚠
C603, 604	ECA1JPXS221E	63V 220U
C605, 606	ECKR1H103JZ3	50V 0.01U
C607	ECQE2104KF3	100V 0.1U
C609	ECA1CM221B	16V 220U
C611-614	ECA1JAP220B	63V 22U
C651-653	ECA1EPXS100B	25V 10U
C654, 655	ECA1HPXS3R3B	50V 3.3U
C656	ECBT1H821KB5	50V 820P
C657, 658	ECKR1H103ZF5	50V 0.01U

■ PACKING

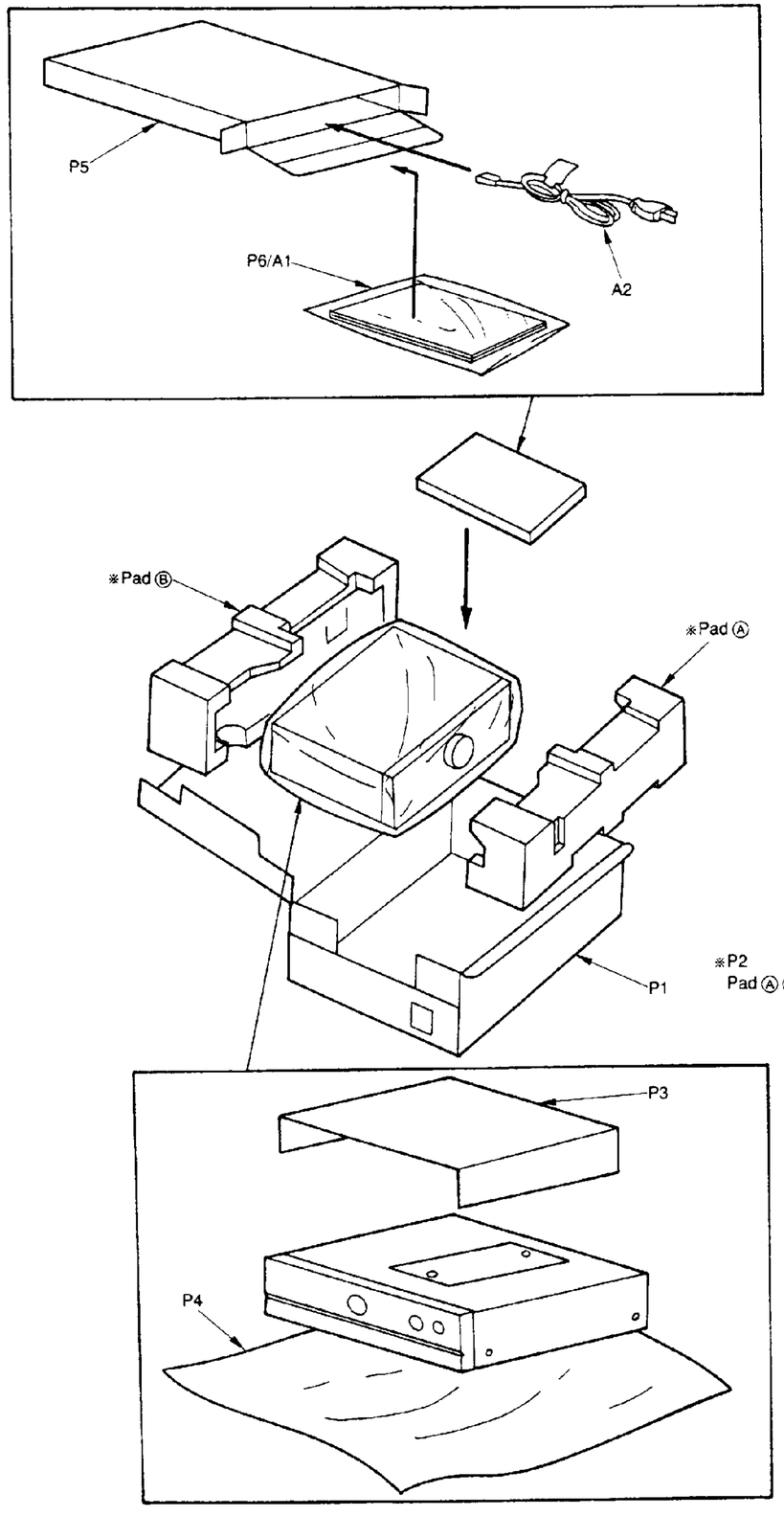

Printed in Japan
F910509000FF/HH/TN

■ LOCATION OF CONTROLS

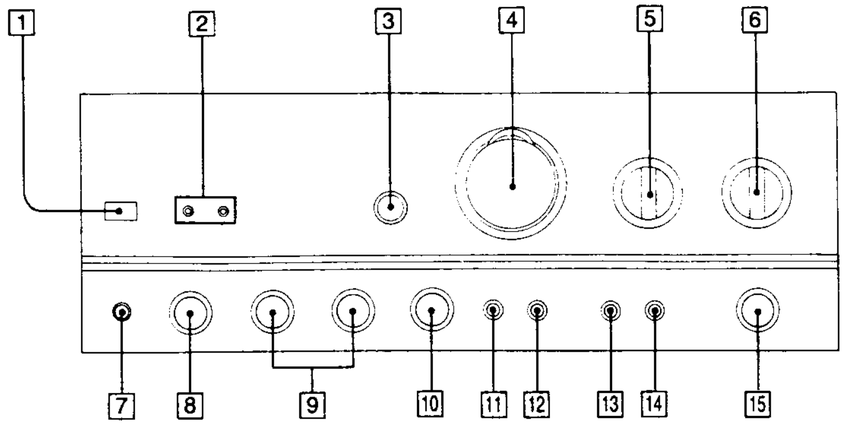

1 Power switch (POWER)

2 Operation indicators (AMPLIFIER OPERATION MONITOR)
These indicators illuminate to indicate the operating condition of this unit.
VOLTAGE CONTROL:
When the power is switched ON, this indicator illuminates when the unit is in the operation condition.
CURRENT DRIVE:
When the power is switched ON, this indicator illuminates after about 4 seconds when the unit is in the operation condition.
If an abnormal condition in the circuitry is detected, such as DC voltage appearing in the output, or a short-circuit of the positive (+) and negative (−) wires from the speaker terminals, the protection circuit functions and this indicator does not illuminate.

3 Power amplifier direct switch (POWER AMP DIRECT)
This switch is used to listen to the sound from a component connected to the "POWER AMP DIRECT" terminals.
When this switch is pressed inward to the "ON" position, a superior level of tone quality can be obtained, because the signals from the component connected to the "POWER AMP DIRECT" terminals are sent directly to the volume control and power amplifier section of this unit. The tone control circuit, balance control, loudness switch, muting switch and mode selector are bypassed.

4 Volume control/indicator (VOLUME)
There are two types of volume scale indications: one for when the extended direct drive selector (for SU-VX800) or the power amplifier direct switch (for SU-VX700) is OFF, and one for when it is ON (Indicator will illuminate.).

5 Recording output selector (REC SELECTOR)
This selector is used to select the sound source to be recorded by the connected tape deck 1 and/or tape deck 2 (or DAT).

6 Input selector (INPUT SELECTOR)
This selector is used to select the sound source to be heard, such as a disc, radio broadcast, etc.

7 Headphones jack (PHONES)

8 Speaker selector (SPEAKERS)
This selector is used to select the speaker systems to be used.
OFF: No sound will be heard from the speaker systems.
A: Sound can be heard from the speaker systems connected to the "A" terminals.
B: Sound can be heard from the speaker systems connected to the "B" terminals.
A+B/BI-WIRING: Sound can be heard simultaneously from the speaker systems connected to the "A" terminals and the "B" terminals. Or, if bi-wired speaker systems are connected, sound can be heard from them.

9 Tone controls (BASS/TREBLE)
The bass control is used to adjust the low-frequency sound range, and the treble control is used to adjust the high-frequency sound range.

10 Balance control (BALANCE)
This control is used to adjust the left/right volume balance.

11 Tone control switch (TONE CONTROL)
This switch is used to set the tone control circuit (bass, treble) ON or OFF.

12 Loudness switch (LOUDNESS)
This switch is used when listening to music at a low volume level. Auditory perception of sound in the low frequency range falls off at low volume, but when the switch is set to the "ON" position, this deficiency is compensated for, so that the full impact of the musical performance can be enjoyed.

13 Muting switch (MUTING)
This switch is used to temporarily reduce the volume level (approx. 1/10).
The effect activates when setting this switch to the "ON" position.

14 Mode selector (MODE)
This selector is used to select stereo or monaural operation.

15 Phono cartridge selector (PHONO SELECTOR)
This selector should be set to the position which corresponds to the type of cartridge used on the turntable.
The "SUBSONIC" position is used to eliminate ultra-low-frequency noise such as motor "rumble" and unusual vibration of the woofer cone caused by a warped disc, etc.

■ CONNECTIONS

Connection to speaker systems

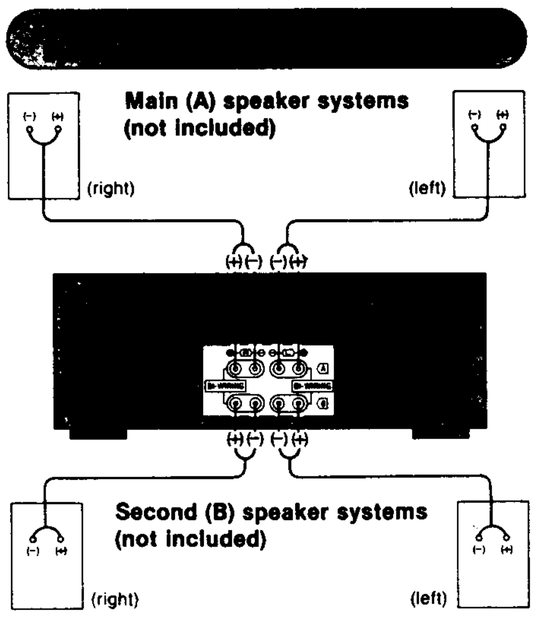

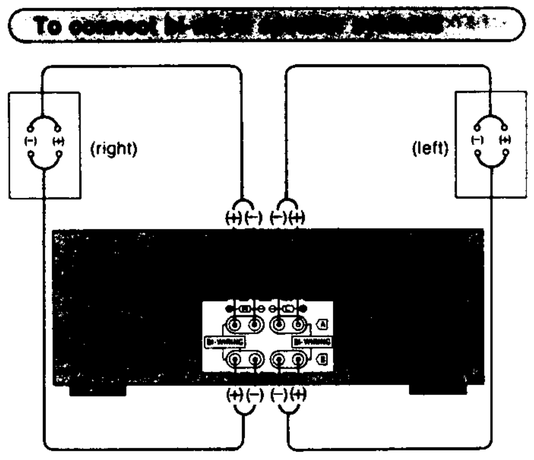

Note: Connect only bi-wired speaker systems in this way.

To connect the AC power supply cord (included)

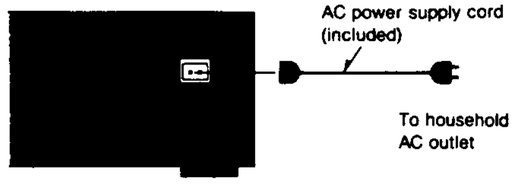

Notes:
- Connect the AC power supply cord (included) after all other cables and cords are connected.
- The configuration of the AC outlet and AC power supply cord differs according to area.

For United Kingdom

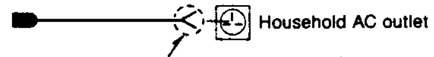

Fit a suitable plug to the AC power supply cord.

To connect to each terminals

Make connections to each component in the system by using stereo connection cables (not included).

Stereo connection cable White (L) Red (R)

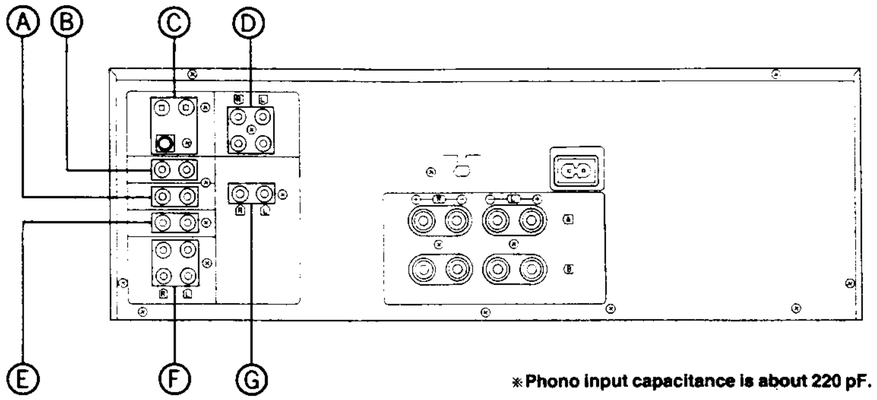

***Phono input capacitance is about 220 pF.**

Ⓐ "CD" terminals

Connect a compact disc player.

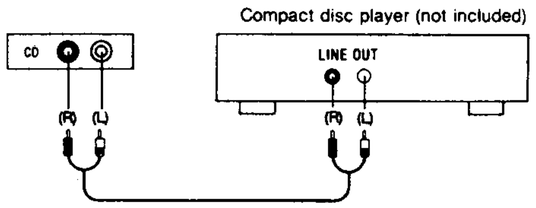

Ⓒ "PHONO" terminals

Connect a turntable. See "Using the short-circuit pins", below.

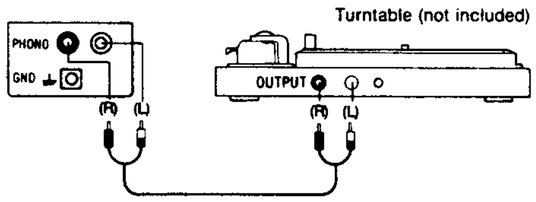

■ "GND" terminal

This terminal is for use with a turntable which has a ground wire.

Using the short-circuit pins (included)
Short-circuit pins are inserted into the "PHONO" terminals to reduce noise.
Remove the pins before connecting a turntable and reinsert the pins if the turntable is later disconnected. Never connect a short-circuit pin to a "REC OUT" terminal or any terminal other than those above.

Ⓑ "TUNER" terminals

Connect a tuner.

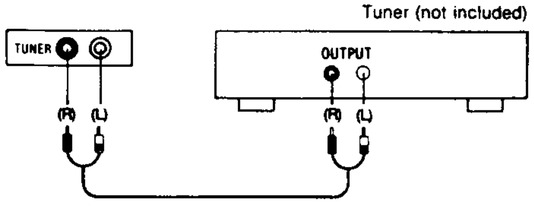

Ⓓ

Connect a second tape deck or a digital audio tape deck (DAT).

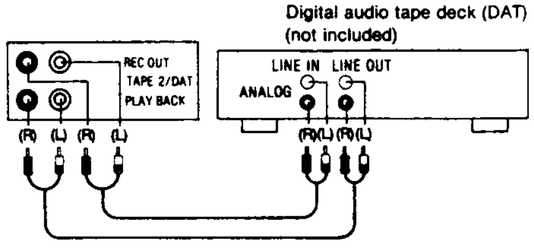

Ⓔ "AUX" terminals

Connect a component such as a video disc player (audio only connectable), etc.

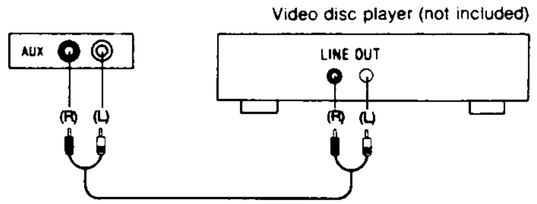

Ⓕ "TAPE 1" terminals

Connect a first tape deck.

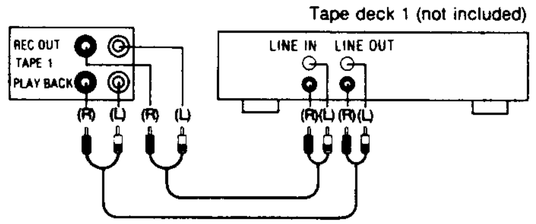

Ⓖ "POWER AMP DIRECT" terminals

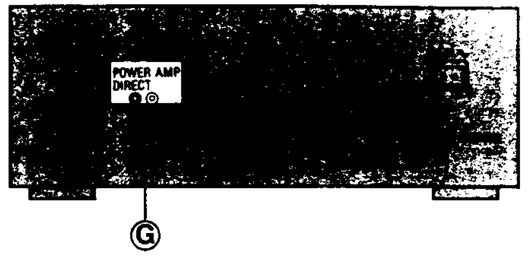

Connect a compact disc player, a digital audio tape deck, or a D/A converter.
A superior level of tone quality can be obtained, because the signal from these terminals are sent directly to the volume control and power amplifier section of this unit.
The sounds from a component connected to these terminals cannot be recorded.

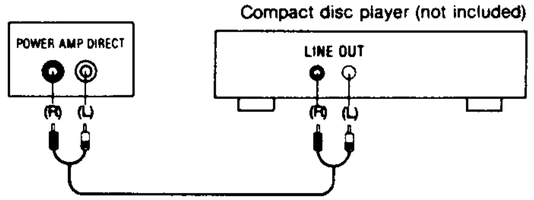

•Replacement of the Foot.

1. Remove the 4 heat melted posts on the chassis with a pair of nippers or similar tool.
2. To replace the foot (RKA0009-1) on the chassis, melt the 4 posts with a soldering iron.

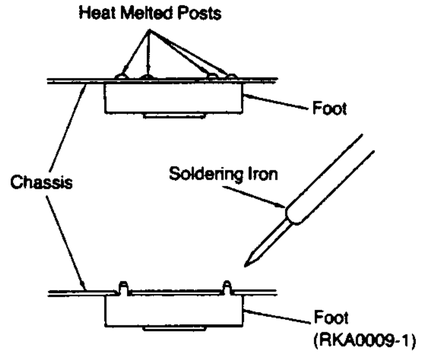

■ DISASSEMBLY INSTRUCTIONS

"ATTENTION SERVICER"
Some chassis components may have sharp edges. Be careful when disassembling and servicing.

Ref. No. 1 — Removal of the cabinet

Procedure 1

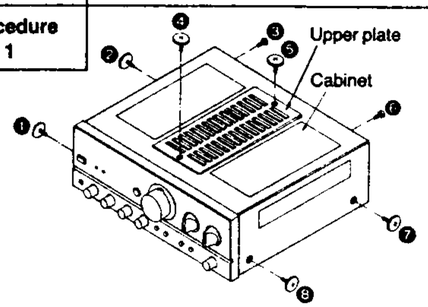

•Remove the 8 screws (❶~❽).
Attention:
When removing the cabinet from the unit, please don't forget to remove the 2 screws (❹, ❺) of the upper plate.
Unless you remove the 2 screws (❹, ❺), it may change shape of the cabinet.

Ref. No. 2 — Removal of the Upper Plate

Procedure 1→2

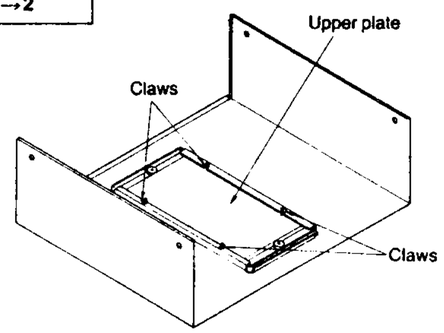

•Release the 4 claws.

Ref. No. 3 — Removal of the P.C.B. angle

Procedure 1→3

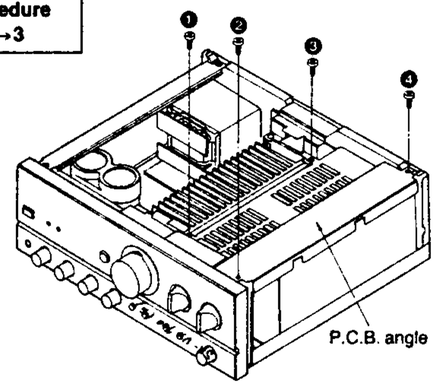

•Remove the 4 screws (❶~❹).

Ref. No. 4 — Removal of the side angle

Procedure 1→4

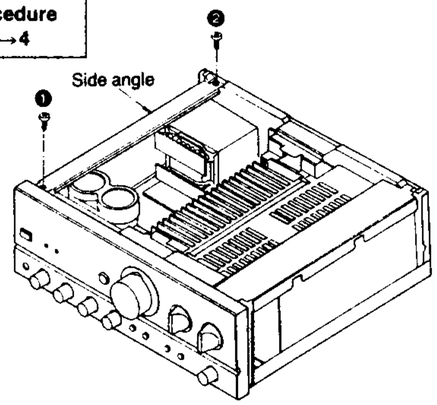

•Remove the 2 screws (❶, ❷).

Ref. No. 5 — Removal of the angle (A) and angle (B)

Procedure 1→3→5

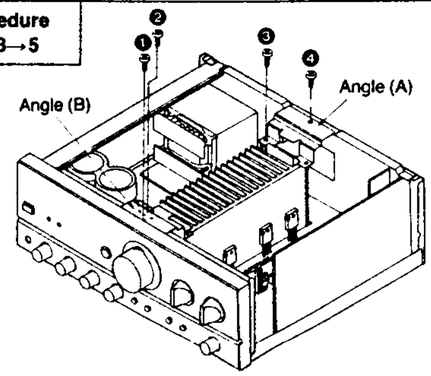

•Remove the 4 screws (❶~❹).

Ref. No. 6 — Removal of the capacitor block P.C.B.

Procedure 1→4→6

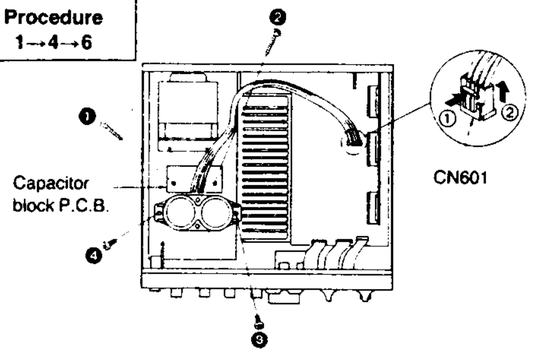

1. Remove the 1 connector (CN601).
2. Remove the 4 screws (❶~❹).

Ref. No. 7 — Removal of the power transformer

Procedure 1→4→7

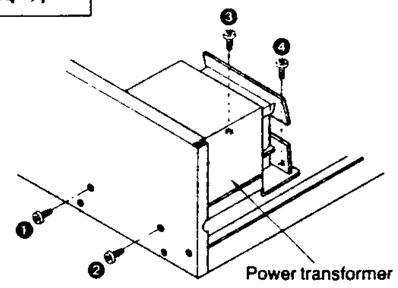

•Remove the 4 screws (❶~❹).

Ref. No. 8 — Removal of the front panel ass'y

Procedure 1→3→4→5→8

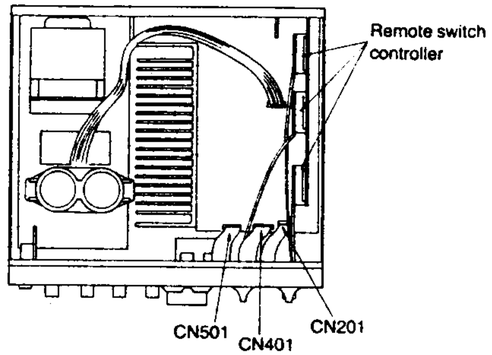

1. Remove the remote switch controller.
2. Remove the 3 flat cables (CN201, CN401, CN501).

■ Removal of the remote switch controller

•Remove the 4 claws.

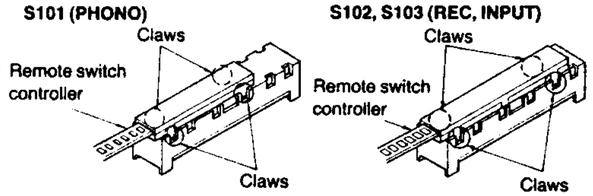

■ Replacing of the remote switch controller

1. Turn the selector knobs to the arrows.
2. Put the switch slider of switch to end and put in the remote switch controller.

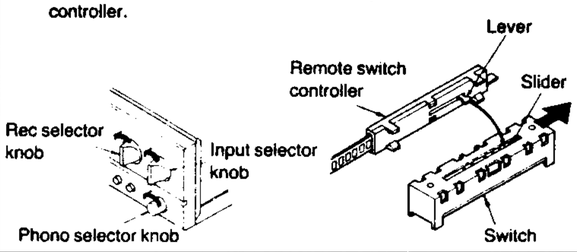

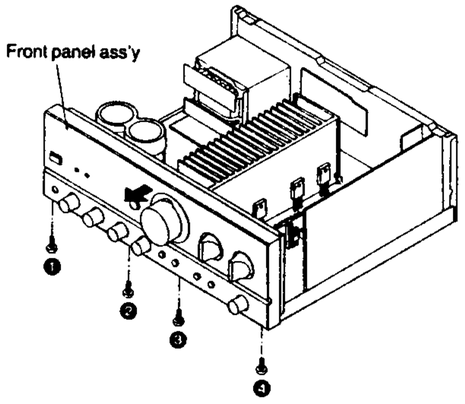

3. Remove the 4 screws (❶~❹).
4. Remove the front panel ass'y in the direction of arrow.

Ref. No. 9 — Removal of the power switch/headphones jack P.C.B.

Procedure 1→3→4→5→8→9

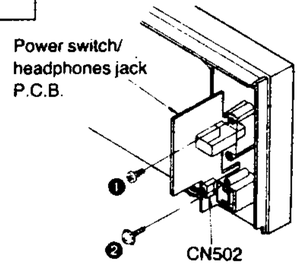

1. Remove the 1 connector (CN502).
2. Remove the 2 screws (❶, ❷).

Ref. No. 10 — Removal of the volume P.C.B.

Procedure 1→3→4→5→8→9

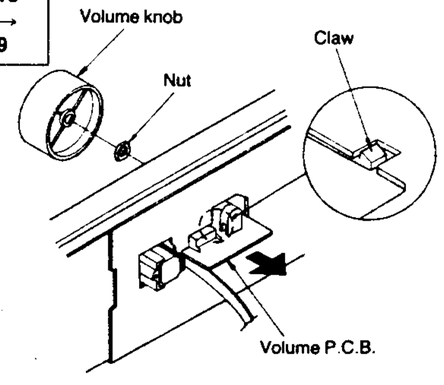

1. Pull out the volume knob.
2. Remove the nut.
3. Release the 1 claw.

Ref. No. 11	Removal of the remote switch controller

Procedure
1→3→4→5→8→11

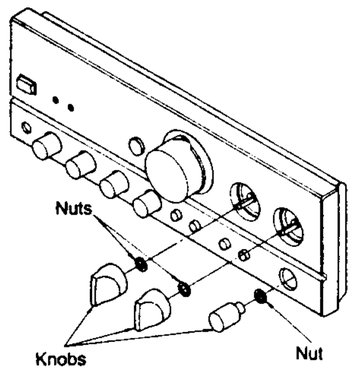

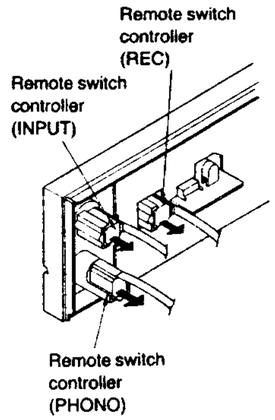

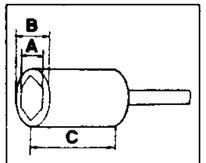

A: 11 mm
B: 16 mm
C: longer than 22 mm
•Use a wrench of the dimensions shown in the illustration above to remove nuts.

1. Pull out the 3 knobs.
2. Remove the 3 nuts.
3. Remove the remote switch controller in the direction of arrow.

Ref. No. 12	Removal of the operation P.C.B.

Procedure
1→3→4→5→8→9→10→12

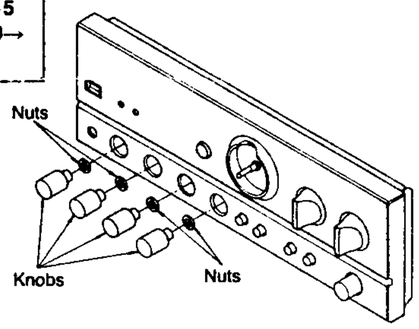

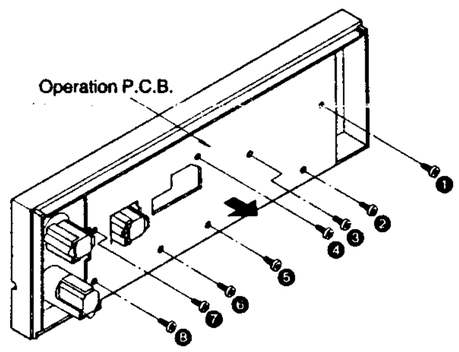

1. Pull out the 4 knobs.
2. Remove the 4 nuts.
3. Remove the 8 screws (❶~❽).
4. Remove the operation P.C.B. in the direction of arrow.

Ref. No. 13	Removal of the AC IN/VOLT ADJ. P.C.B.

Procedure
1→13

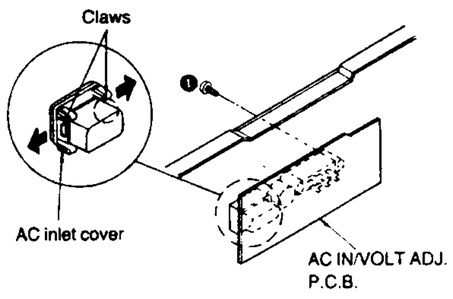

1. Remove the 1 screw (❶).
2. Release the 2 claws of AC inlet cover.

Ref. No. 14	Removal of the rear panel

Procedure
1→13→14

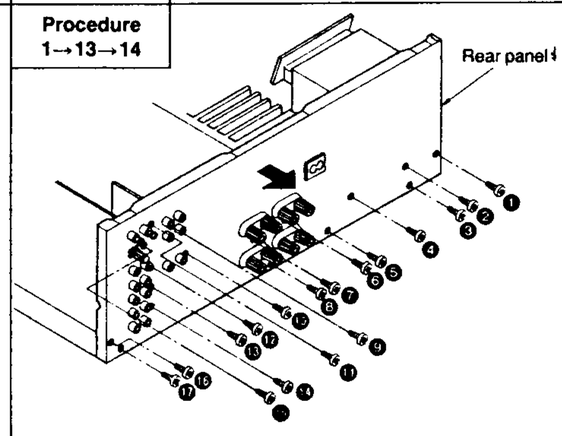

1. Remove the 17 screws (❶~⓱).
2. Remove the rear panel in the direction of arrow.

Ref. No. 15	Removal of the input select P.C.B.

Procedure
1→13→14→15

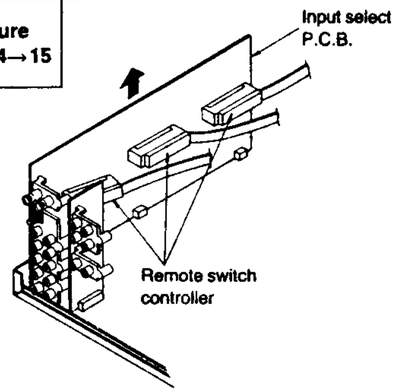

1. Remove the remote switch controller.
2. Remove the input select P.C.B. in the direction of arrow.

Ref. No. 16	Removal of the tape 2/DAT P.C.B.

Procedure
1→13→14→16

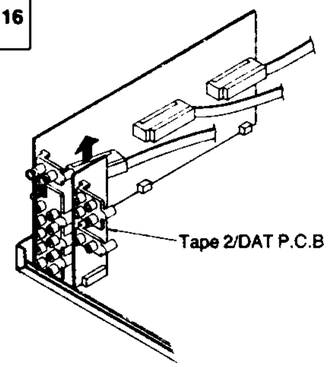

•Remove the tape 2/DAT P.C.B. in the direction of arrow.

Ref. No. 17	Removal of the main P.C.B.

Procedure
1→13→14→15→16→17

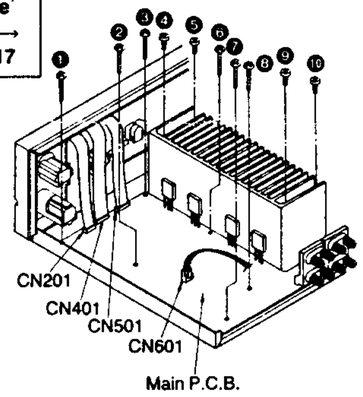

1. Remove the 3-flat cables (CN201, CN401, CN501).
2. Remove the 1 connector (CN601).
3. Remove the 10 screws (❶~❿).

Ref. No. 18	Removal of the power transistor

Procedure
1→3→18

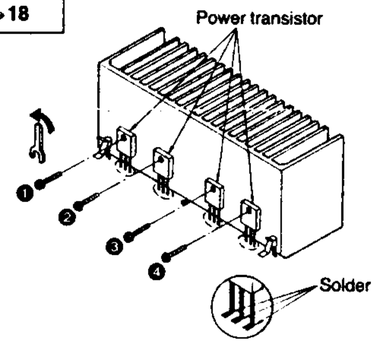

1. Unsolder the power transistor.
2. Remove the 4 screws (❶~❹).
•When mounting the power transistor, apply silicon thermal compound (SZZ0L15) to the rear of the power transistor.

Ref. No. 19	Check of the main P.C.B.

Procedure
1→19

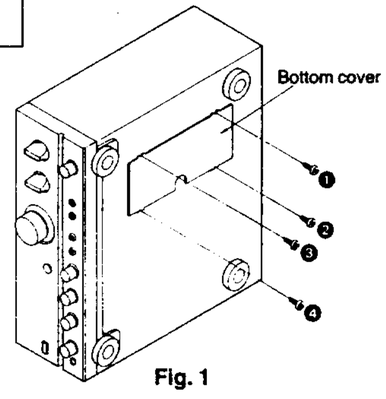

Fig. 1

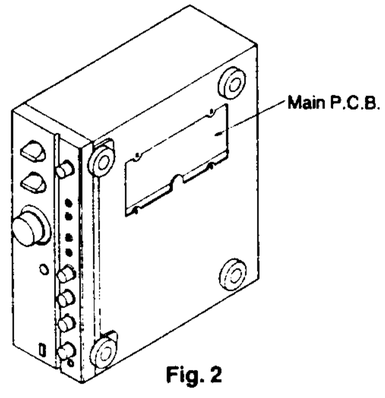

Fig. 2

1. Remove the 4 screws (❶~❹).
2. When checking the soldered surface of the digital P.C.B. and replacing the parts, do as shown in the Fig. 2.