SERVICE MANUAL

ES-5030R

AUDIO & VIDEO SURROUND AMPLIFIER

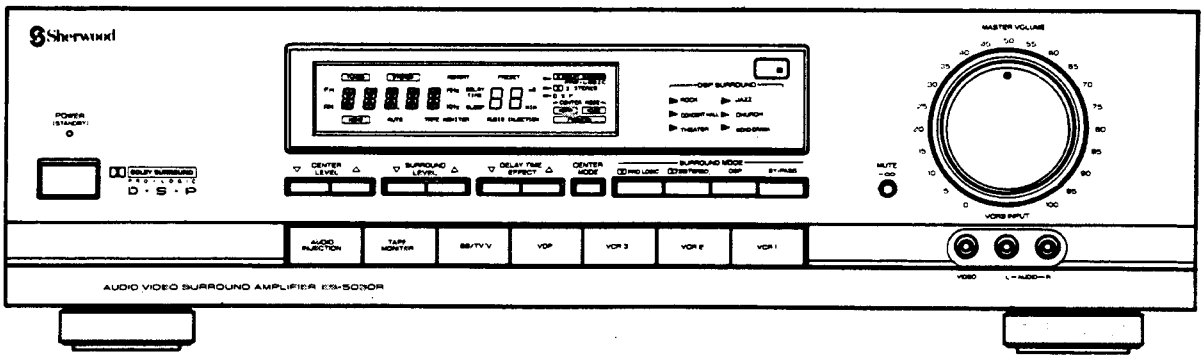

■ CONTENTS

Safety Precautions 2
Specifications 3
Circuit Description 4
Block Diagram 7
Wiring Diagram 9
Exploded View I (Cabinet & Chassis) 11
Exploded View II (Commander) 13
Cabinet & Chassis Parts List 14
Printed Circuit Boards 15
Electircal Parts List 21
Semiconductor Lead Identification & Internal Diagram 26
Voltage Chart 34
Transistors Lead Identifications 36
Schematic Diagram I 37
Schematic Diagram II 39
Schematic Diagram III 41

www.manualscenter.com

Sherwood

SAFETY PRECAUTIONS

WARNING

Service Should not be attempted by anyone unfamiliar with the necessary precautions on this player. The following precautions are necessary during servicing.

1. Many electrical and mechanical parts in this player have special safety characteristics that often pass unnoticed and the protection afforded by them cannot necessarily be obtained by using replacement components rated for higher voltage, wattage, etc. Replacement parts that have these special safety characteristics are identified in this manual and its supplements: electrical components having such features are identified by ⚠ in the schematic diagram and the parts list.

   Before replacing any of these components, read the parts list in this manual carefully. The use of substitute replacement parts that do not have the same safety characterstics as specified in the parts list may create shock, fire, or other hazards.

2. Before returning the set to the customer, always do an AC leakage current check on the exposed metal parts of the cabinet, such as terminals, screw heads, metal overlays, etc., to be sure the set is safe to operate without danger of electrical shock.
   Plug the AC line cord directly into a 120 V AC outlet**(120 V AC version only).** (Do not use a line isolation transformer during this check.)
   Use an AC voltmeter, having 5000 Ω per volt or greater sensitivity, in the following manner: Connect a 1500 Ω 10 watt resistor paralleled by a 0.15 μF 150 V AC capacitor, between a known good earth ground (water pipe, conduit, etc.) and the exposed metal parts, one at a time. Measure the AC voltage across the combination of a 1500 Ω resistor and a 0.15 μF capacitor. Reverse the AC plug at the AC outlet and repeat AC voltage measurements for each exposed metal part. Voltage measured must not exceed 0.75 V RMS. This corresponds to 0.2 mA AC.
   Any value exceeding this limit constitutes a potential shock hazard and must be corrected immediately.

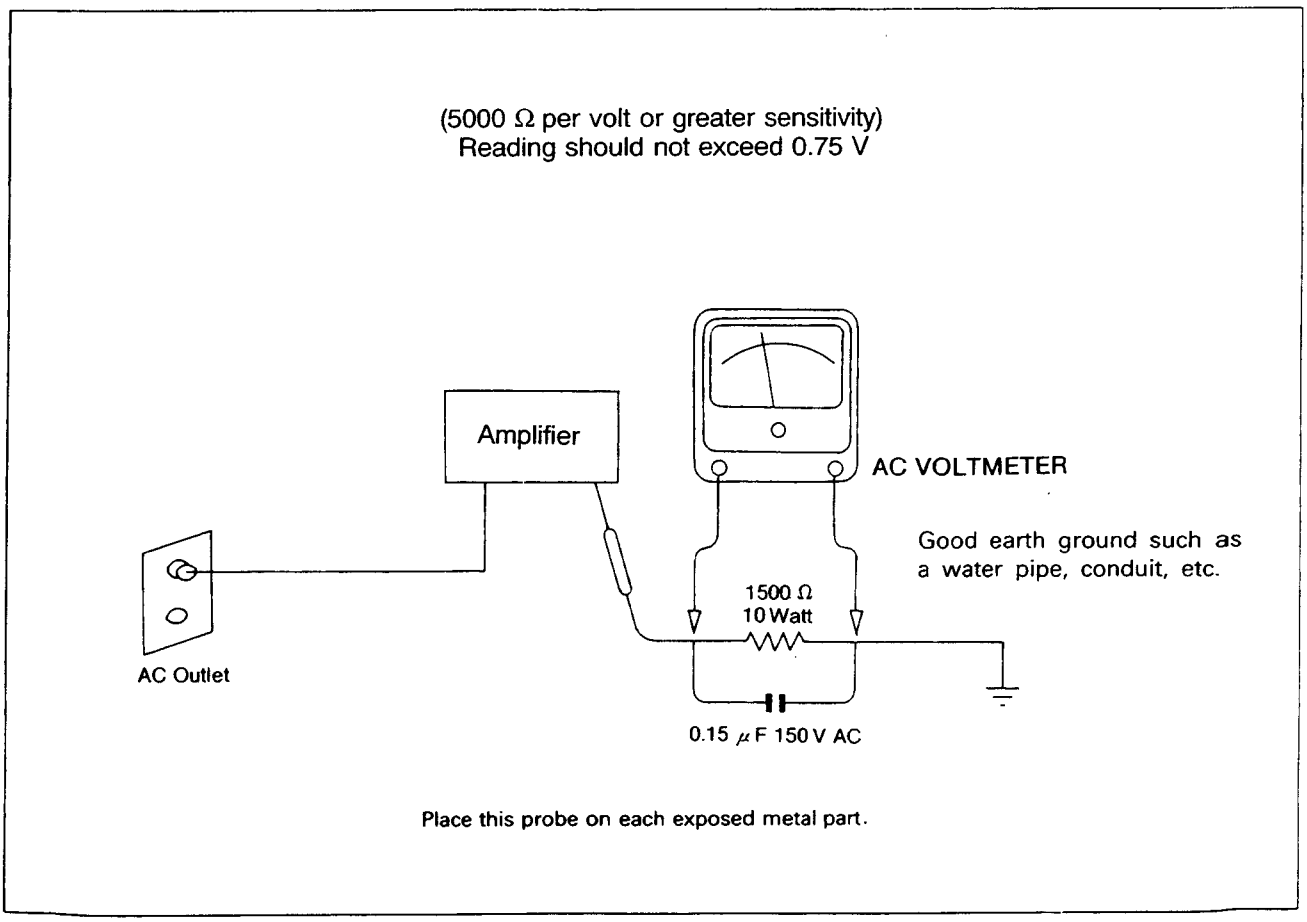

SPECIFICATIONS

Front output	• Front output sensitivity at 1 V output 1 kHz, 47 kΩ ..... 150 mV • Frequency response(-3 dB) ..... 10 Hz~55 kHz • Total harmonic distortion ..... 0.005% • Signal to noise ratio(1HF-A weighted) ..... 95 dB
DSP/Dolby Prologic	• RMS output power Center amp ..... 50 W Rear amp ..... 25 W+25 W • Frequency response(-3 dB) Center Channel Normal ..... 100 Hz~15 kHz Wide ..... 30 Hz~15 kHz Rear channel ..... 100 Hz~6.2 kHz • Total Harmonic distortion Center channel at 50 W 1 kHz, 8 Ω ..... 0.05% Rear channel at 25 W 1 kHz, 8 Ω ..... 0.5% • Signal to noise ratio(1HF-A weighted) Center channel ..... 83 dB Rear channel ..... 68 dB • Pre output at input sensitivity 210 mV Center channel ..... 1.5 V Rear channel ..... 1.5 V
VIDEO	• Input impedance ..... 75 Ω • Frequency response(-3 dB) ..... 5 Hz~10 MHz • Signal to noise ..... 55 dB
General	• Power requirement ..... 230 W • Dimension ..... (W)440 × (H)110 × (D)280 mm • Weight ..... 6.5 kg • Power requirements: A : 120 V 60 Hz for American/Canadian version B : 120/220 V, 60/50 Hz for mult-voltage version(switchable) C : 230 V 50 Hz for general European version D : 230 V 50 Hz German/Italian version E : 240 V 50 Hz for U.K/Austalian version F : 230 V 50 Hz for Swiss/Scandinabian version

www.manualscenter.com

Note: Component and circuitry are subject to modification to insure best operation under differing local conditions. This manual is based on the American(A) standard, and provides information on regional circuit modification through use of alternate schematic diagrams or wiring diagram, and information on regional component variations through use of parts list. Design and specifictions subject to change without notice for improvement.

CIRCUIT DESCRIPTION

Pin Assignment of μ-processor, MC μPD75212

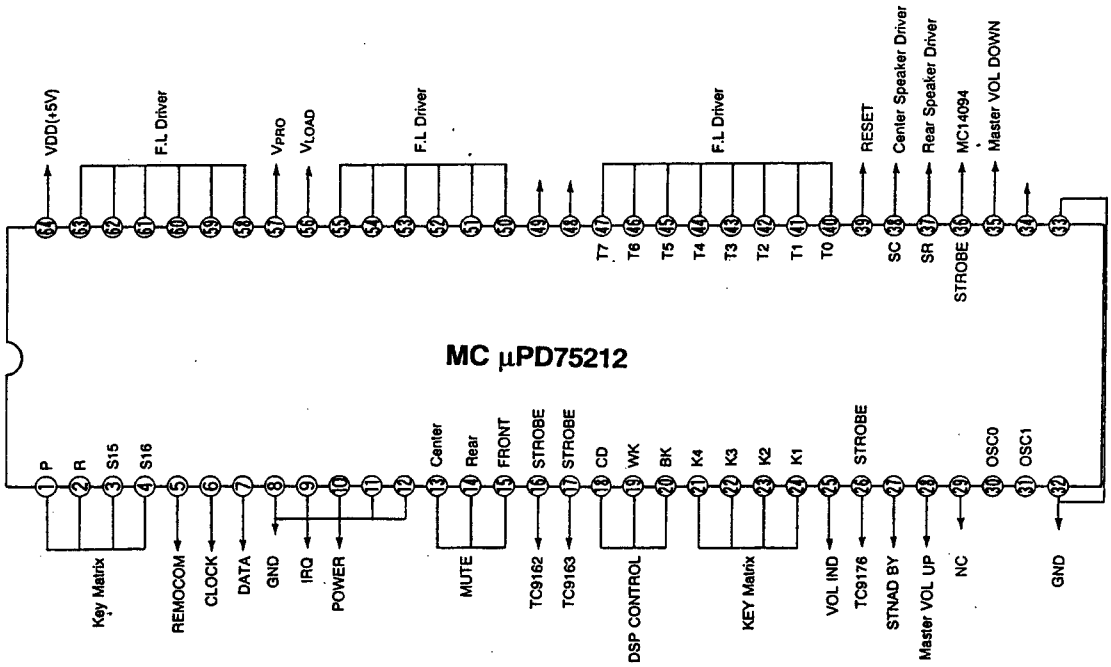

Key Matrix

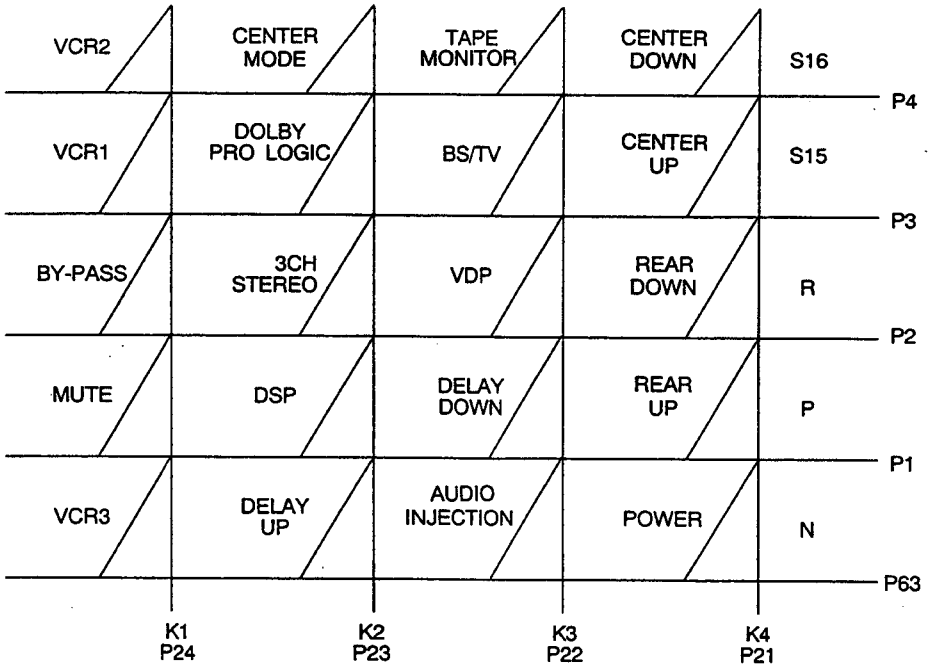

www.manualscenter.com

Functions Assigned(IC701: μPD75212)

No.	Terminal	operating chart	Remarks
1~4	Key Matrix		
5	Remote Control Data IN	5V 0V	
6	Clock		
7	Data		
8	GND		
9	IRQ		
10	Power		
11	GND		
12	GND		
13	Center Mute	5V 0V	
14	Rear Mute	5V 0V	
15	Front Mute	5V 0V	
16	Switch IC Strobe		TC9162
17	Switch IC Strobe		TC9163
18	DSP CD Data Control		YM7306C
19	DSP WK Data Control		YM7306C
20	DSP BK Data Control		YM7306C
21~24	Key Matrix	5V 0V	
25	Volume IND		
26	Electric V.R Strobe		TC9176
27	Standby		
28	Motor Volume Drive up		TA7291S
29	NC	5V 0V	
30	OSC0		
31	OSC1		
32	GND		
33	GND		
34	NC		
35	Motor Volume Drive Down	5V 0V	TA72913
36	VIDEO/DSP Functions LED Driver		MC14094
37	Rear Speaker Control		
38	Center Speaker Control		
39	Reset		
40~47	LCD Driver		
48	N.C		
49	N.C		
50~55	LCD Driver		
56	V_{LOAD}		
57	V_{PRE}		
58~63	Key Matrix		
64	VDD(+5V)		

Block Diagram

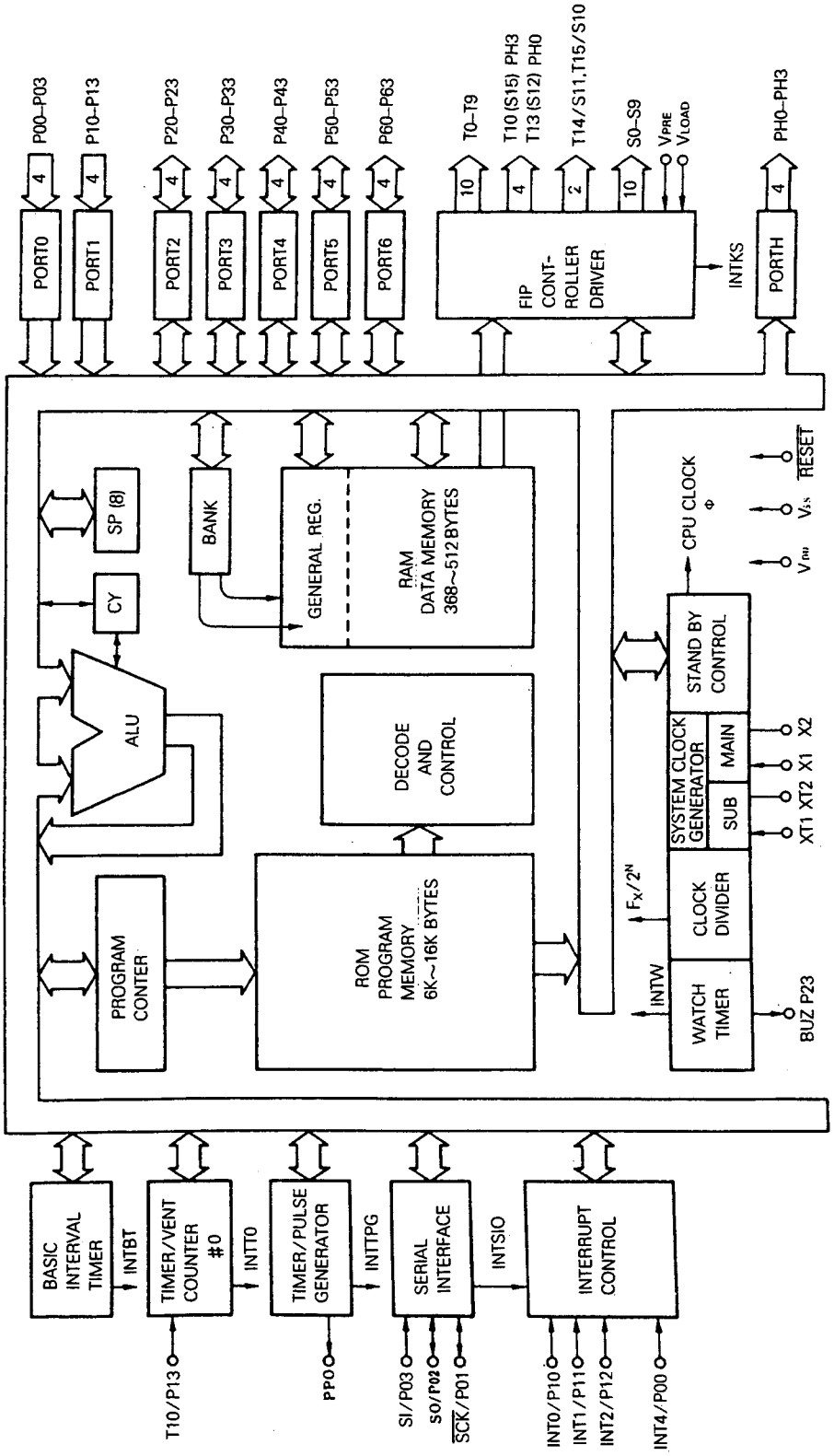

www.manualscenter.com

BLOCK DIAGRAM

Model No. : ES-5030R

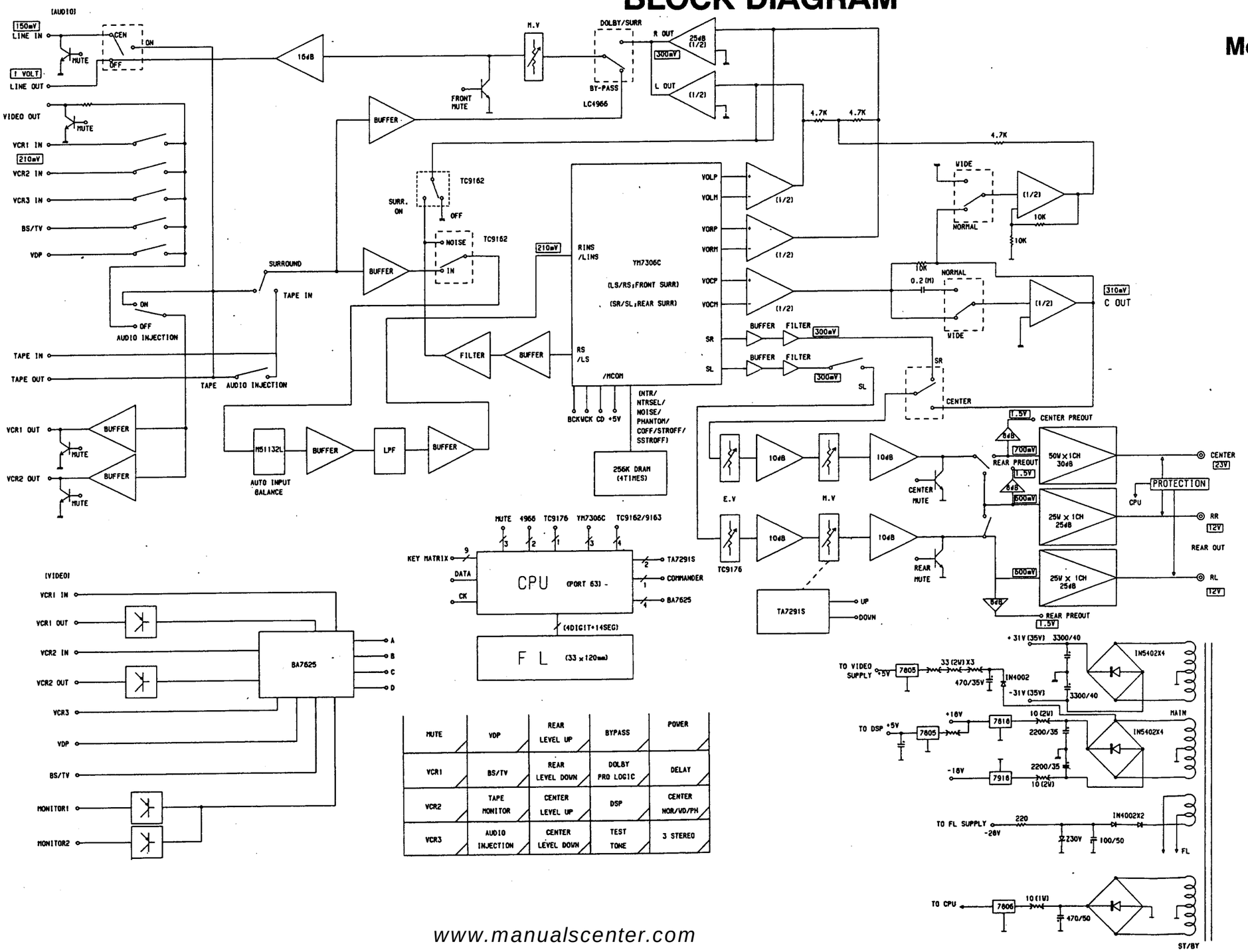

www.manualscenter.com

WIRING DIAGRAM

Model No. : ES-5030R

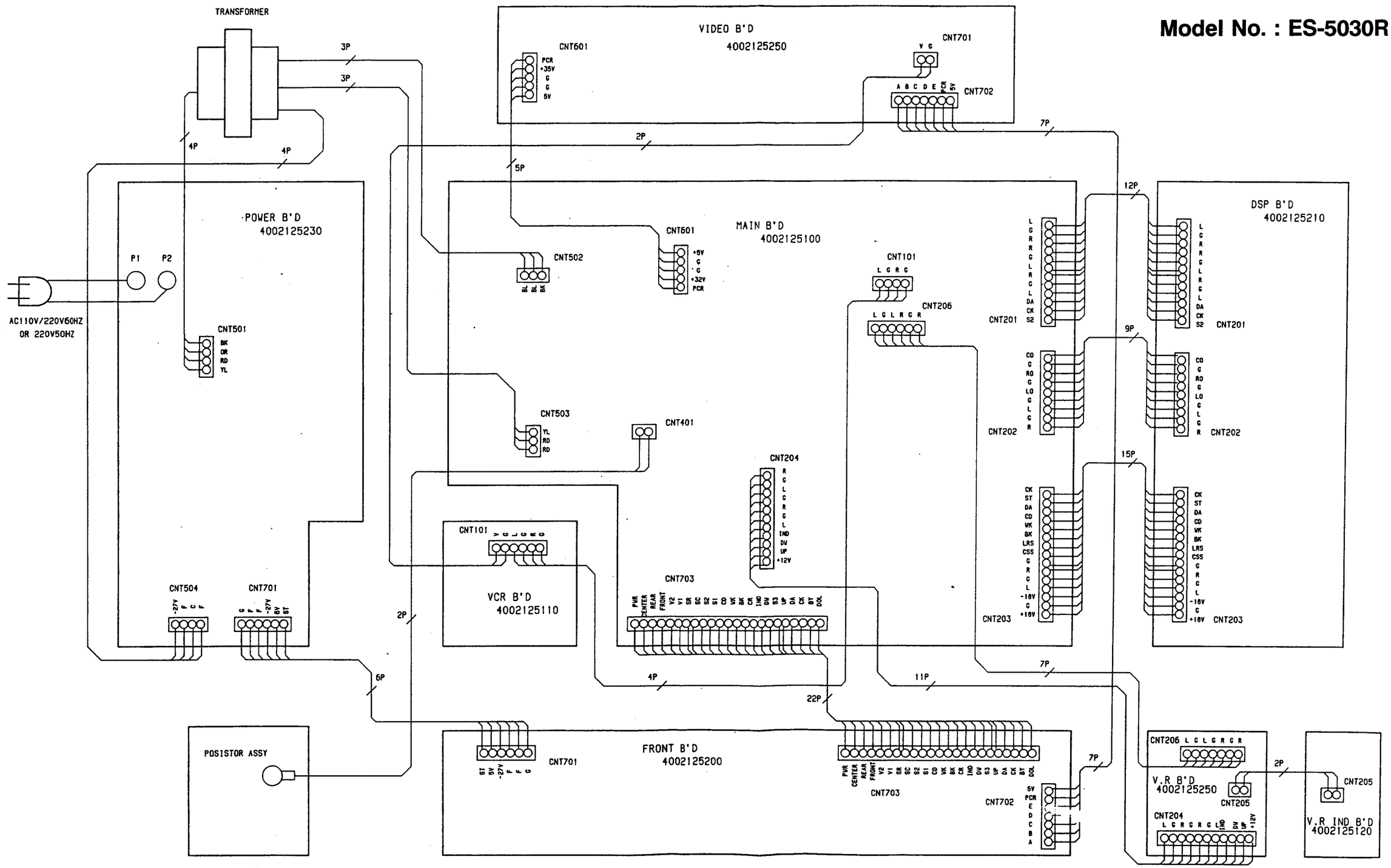

www.manualscenter.com

EXPLODED VIEW I (CABINET & CHASSIS)

Model No. : ES-5030R

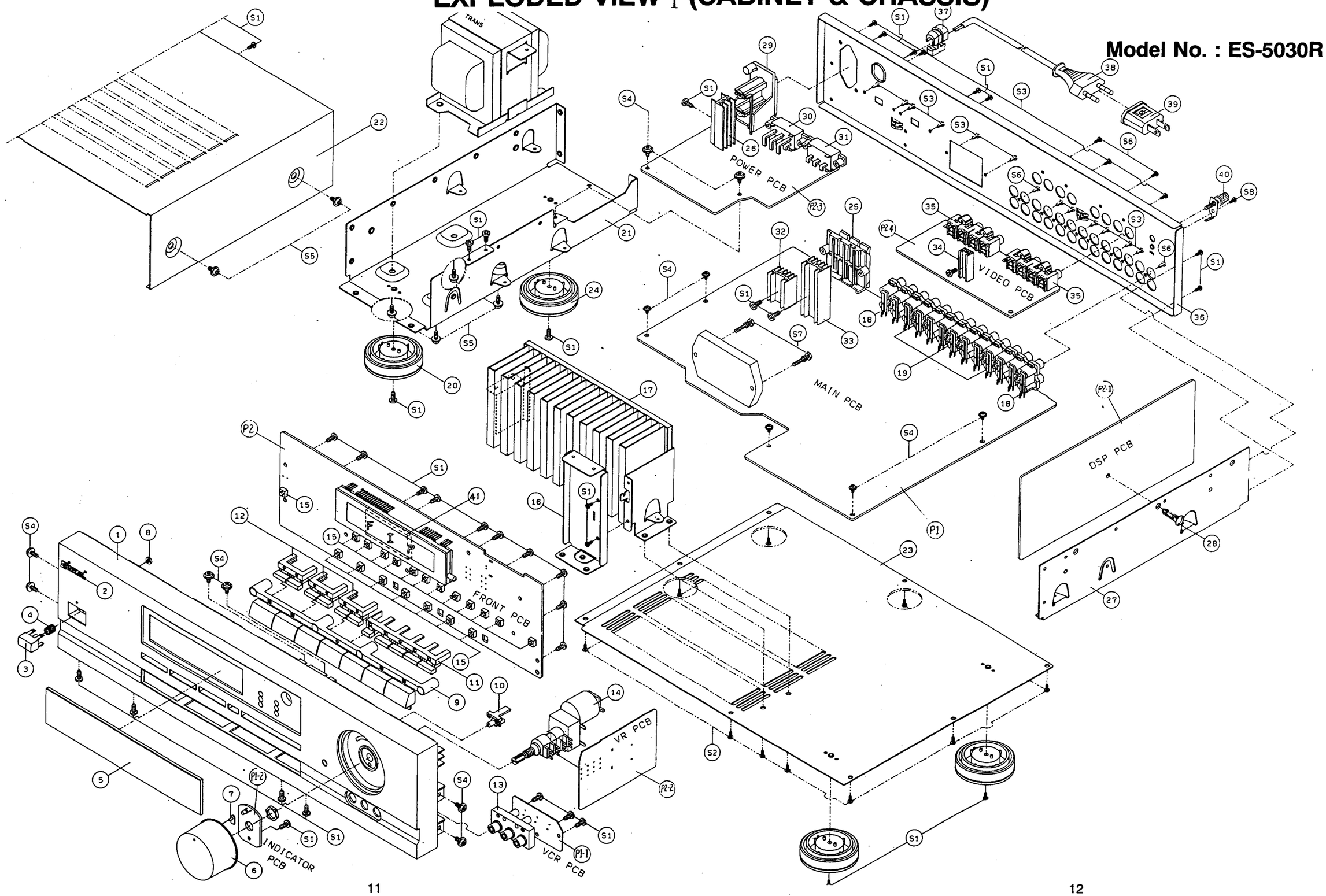

www.manualscenter.com

EXPLODED VIEW Ⅱ (COMMANDER)

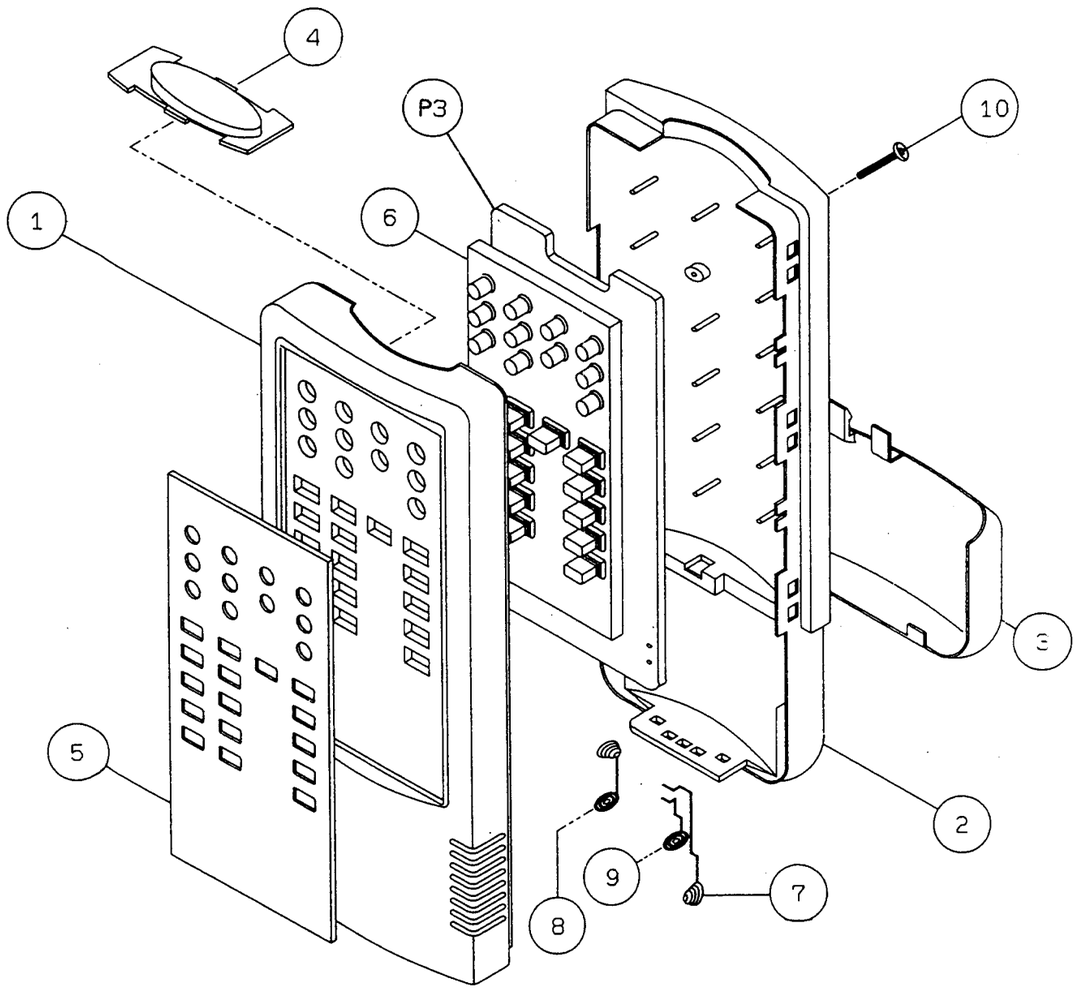

Ref. No.	Description	Mfr. Parts No.	Q'ty
1	Cover Top, ABS, Black	048581000611	1
2	Cover Bottom, ABS, Black	048581000711	1
3	Cover Battery, ABS, Black	048583003711	1
4	Cover Upper, ACRYL, Wine	8555030610	1
5	Function Plate, PVC, DOM	048552003361	1
5	Function Plate, PVC, A,B,C,D,E,F	048552003362	1
6	Rubber Tact, Rubber	048722000761	1
P-25	Spring Battery(D)	6555605610	1
8	Spring Battery(B), SUS	6555605320	1
P25	Spring Battery(D)	6555605410	1
10	Screw PH2 × 10 ZNB	8019120103	1
P3	PCB Remocon	4005011300	1

www.manualscenter.com

CABINET & CHASSIS PARTS LIST

Ref. No.	Part No.	Description	Q'ty	Version
PACKAGE				
	9722036710	Cushion Poly	1	
	9715000120	Film Soft PE	1	
	049605254710	Box Carton	1	
ACCESSORIES				
	4328200510	Cord RCA 2P	1	
	9017036620	INSTRUCTION Manual	1	A
CABINET				
1	048501029511	Panel Front, ABS, Black	1	Dom
	048501029512	Panel Front, ABS, Black	1	A,B,C,D,E,F
2	048535034011	Badge, ABS	1	Dom
	048535033911	Badge, ABS	1	A,B,C,D,E,F
3	8545074330	Power Knob, ABS	1	
4	6555004380	Spring	1	
5	048555036113	Display Window, Acrly	1	Dom
	048555036114	Display Window, Acrly	1	A,B,C,D,E,F
6	8543033210	Rotary Knob, ABS	1	
7	8555047310	Indicator, Acryl	1	
8	8545082010	Indicator Power, Acryl	1	
9	048543051611	Button Tact(7Key), ABS	1	Dom
	048543051612	Button Tact(7Key), ABS	1	A,B,C,D,E,F
10	8545112310	Button Mute, ABS	1	
11	8543051510	Button Tact(5Key), ABS	1	
12	8543051410	Button Tact(2Key), ABS	3	
16	6503028310	Heat Sink BKT. Secc	1	
17	7502007310	Heat Sink AL	1	
20	046033102611	Foot, Al	2	Dom
	046033102511	Foot, (HS), ABS	2	A,B,C,D,E,F
21	6122621310	Frame Left, SECC	1	
22	046122027521	Cover TOP, SECC	1	
23	6122419010	Button Cover, SECC	1	
24	046033102511	Foot, (HS), ABS	2	Dom,B,C,D,E,F
	6033102510	Foot, (Black), ABS	2	A
27	6123205410	Frame Right, SECC	1	
28	6528301910	Fastner, Nylon	1	
36	046102036511	Back Chassis, SECC	1	Dom
	046102036521	Back Chassis, SECC	1	A
	046102036531	Back Chassis, SECC	1	B
	046102036541	Back Chassis, SECC	1	C
	046102036551	Back Chassis, SECC	1	D
	046102036561	Back Chassis, SECC	1	E
	046102036571	Back Chassis, SECC	1	F
37	6513000310	Stopper Cord	1	Dom
	6518000710	Stopper Cord	1	A
	6518000111	Stopper Cord	1	B,C,D,E,F
38 ⚠	4308000810	Cord AC Power	1	Dom
⚠	4308001410	Cord AC Power	1	A
⚠	4308000430	Cord AC Power	1	B,C,D,F
⚠	4308003610	Cord AC Power	1	E
39 ⚠	4428300310	Adapter AC Plug	1	Dom
40	4408104910	Terminal GND	1	
TRANS	2828000307	Transformer, 110/220V 50/60Hz	1	
P1	4002125100	PCB Main	1	
P1-1	4002125110	PCB VCR	1	
P1-2	4002125120	PCB Indicator	1	
P2	4002125200	PCB Front	1	
P2-1	4002125210	PCB DSP	1	
P2-2	4002125220	PCB VR	1	
P2-3	4002125230	PCB Power	1	
P2-4	4002125240	PCB Video	1	

Ref. No.	Part No.	Description	Q'ty	Version
S1	8109230083	Screw #2BTC 3x8B	38	
S2	8109230063	Screw #2BTC 3x6B	10	
S3	8119130103	Screw #1PT 3x10B	16	
S4	8159230081	Screw #2WPTC 3x8Y	14	
S5	8159440083	Screw #WSAM 4x8B	8	
S6	8155000710	Screw Ground	4	
S7	8099130161	Screw HEX MSPW 3x16Y	2	
S8	8119240061	Screw #2PTC 4x6Y	1	

PRODUCT SAFETY NOTICE

Each precaution in this manual should be follower during servicing. Components identified with the IEC symbol ⚠ in the parts list and the safety can be of special significance. When replacing a component identified with ⚠, use only the replacement parts designated, or parts with the same ratings of resistance, wattage or voltage that are designated in the parts list in this manual. Leakage-current or resistance measurements must be made to determine that exposed parts are acceptably insulated from the supply circuit before returning the product to the customer.

PRINTED CIRCUIT BOARDS

MAIN P.C.BOARD

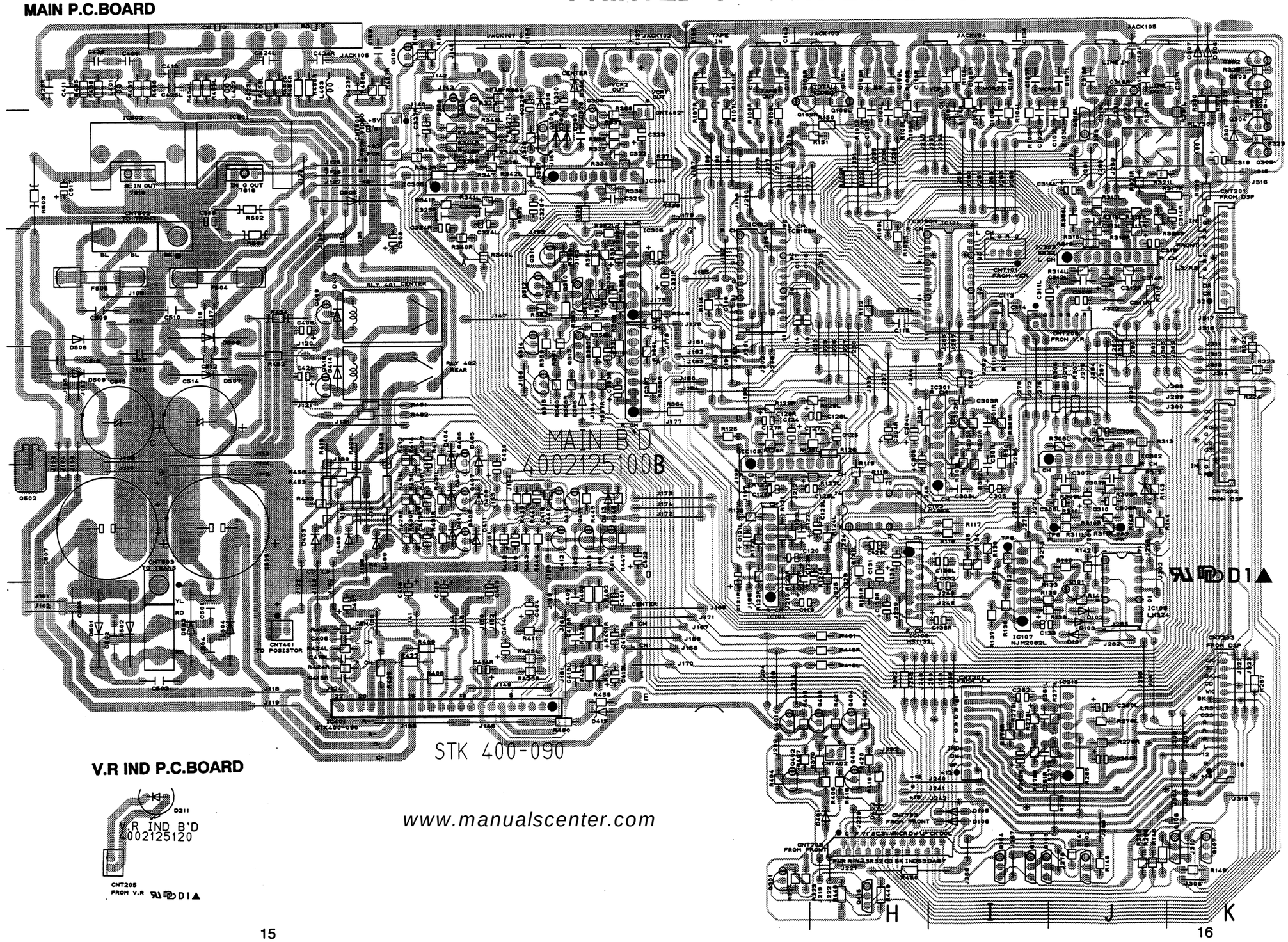

V.R IND P.C.BOARD

www.manualscenter.com

FRONT P.C.BOARD

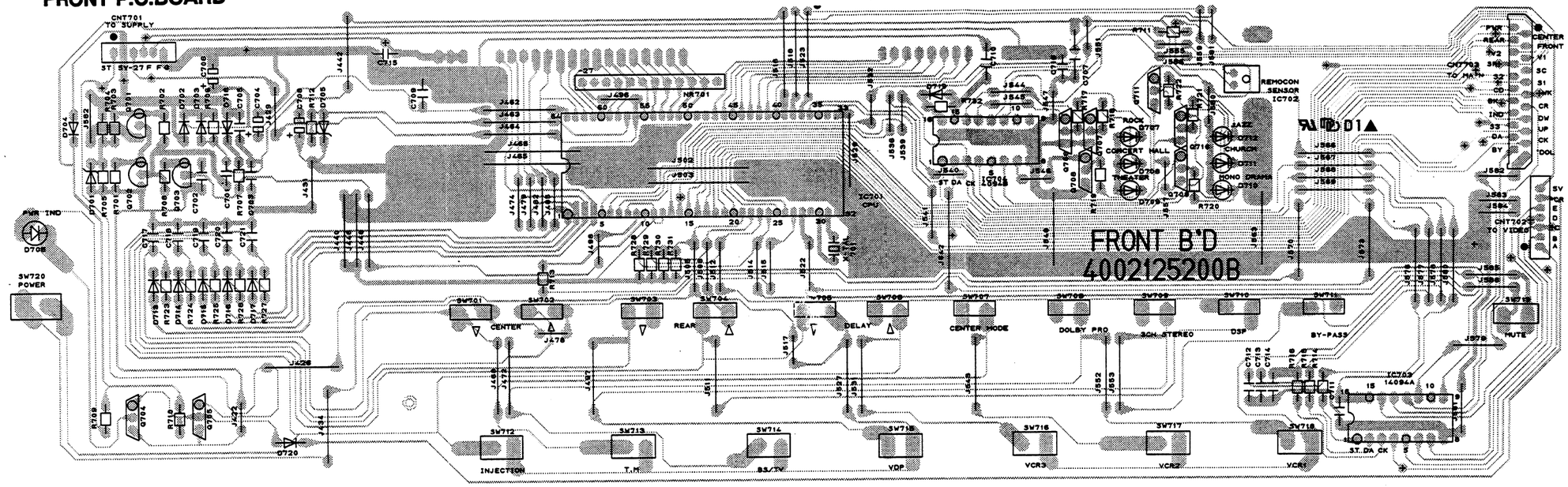

www.manualscenter.com

DSP P.C.BOARD

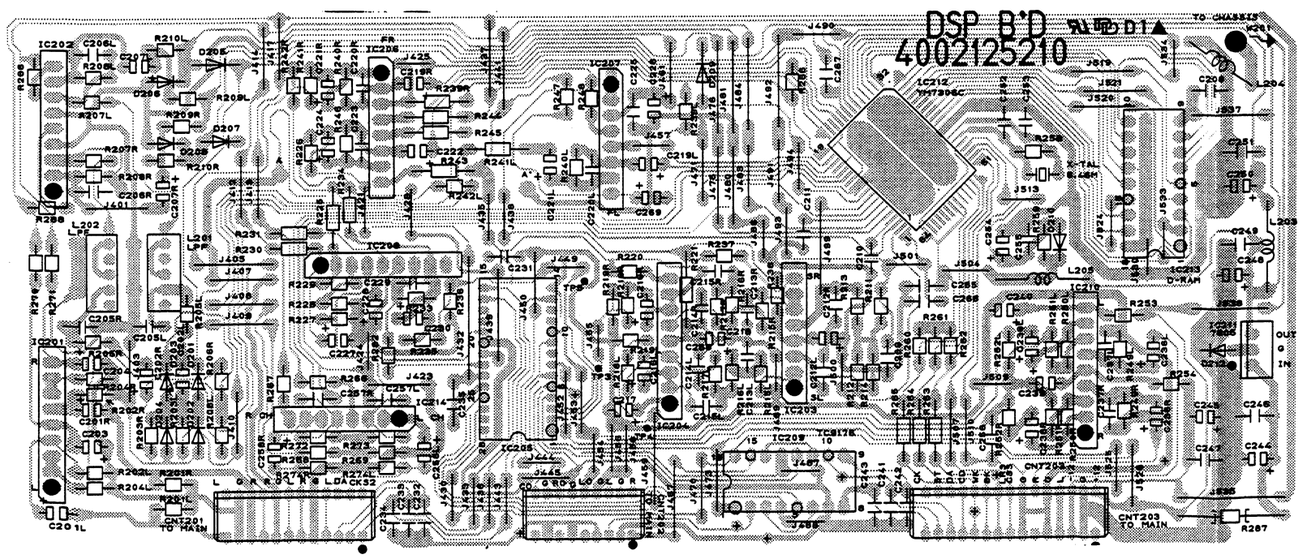

POWER P.C.BOARD

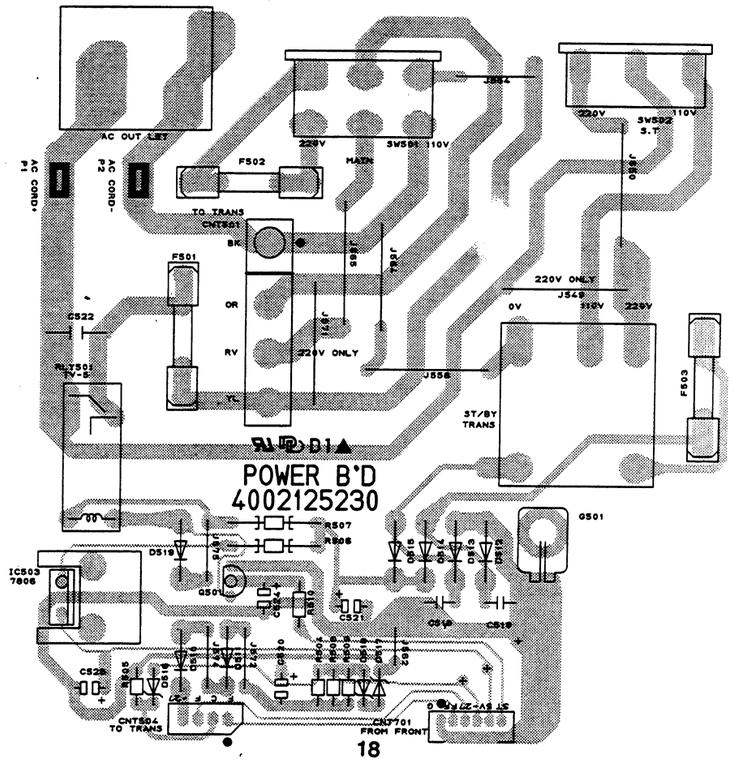

VIDEO P.C.BOARD

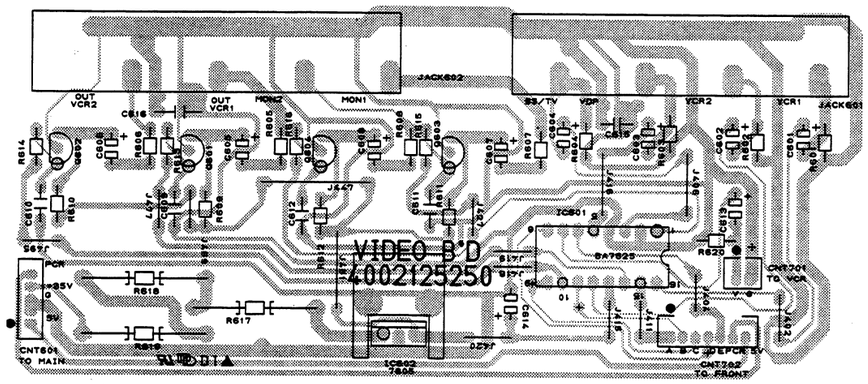

VR P.C.BOARD

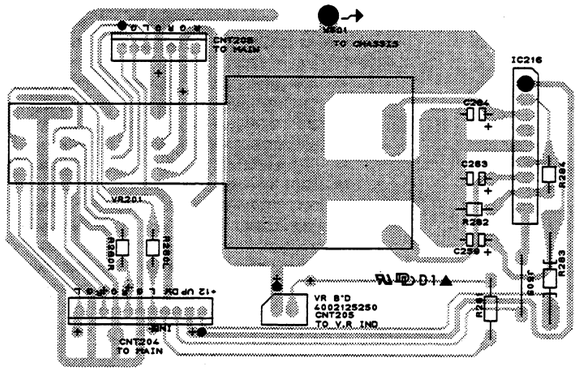

VCR P.C.BOARD

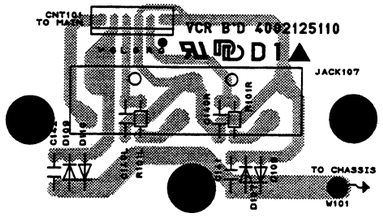

COMMANDER P.C.BOARD

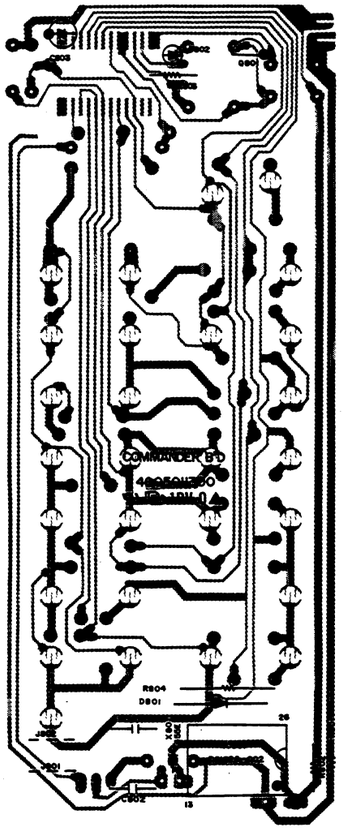

www.manualscenter.com

ELECTRICAL PARTS LIST

Ref. No.	Part No.	Description					Q'ty	Version
P1	054021010018	ASS'Y P.C.B MAIN						
18	4438108110	Jack RCA 4P					2	
19	4438103210	Jack RCA 6P					3	
25	4408107410	Terminal Speaker					1	
32	7505206120	Heat Sink REG TR, AL					1	
33	7505206130	Heat Sink REG TR, AL					1	
	4255001010	Clip, Fuse					4	
	4855000111	Pipe Ceramic					8	
C102L/R	3519101935	Ceramic Tubular	100 pF	50V	J		2	
C103L/R	3519101935	Ceramic Tubular	100 pF	50V	J		2	
C104L/R	3519101935	Ceramic Tubular	100 pF	50V	J		2	
C105L/R	3519101935	Ceramic Tubular	100 pF	50V	J		2	
C106L/R	3519101935	Ceramic Tubular	100 pF	50V	J		2	D
C107L/R	3519101935	Ceramic Tubular	100 pF	50V	J		2	D
C108L/R	3519101935	Ceramic Tubular	100 pF	50V	J		2	D
C109L/R	3519101935	Ceramic Tubular	100 pF	50V	J		2	D
C110L/R	3519101935	Ceramic Tubular	100 pF	50V	J		2	D
C111L/R	3519101935	Ceramic Tubular	100 pF	50V	J		2	D
C112L/R	3519101935	Ceramic Tubular	100 pF	50V	J		2	D
C113	3519101935	Ceramic Tubular	100 pF	50V	J		1	
C114	3519101935	Ceramic Tubular	100 pF	50V	J		1	
C115	3519102935	Ceramic Tubular	1000 pF	50V	J		1	
C116/117	3519101935	Ceramic Tubular	100 pF	50V	J		2	
C118	3519102935	Ceramic Tubular	1000 pF	50V	J		1	
C119/120	3479210071	Electrolytic SA	10 uF	50V	M		2	
C121L/R	3479222971	Electrolytic SA	2.2 uF	50V	M		2	
C122L/R	3519056935	Ceramic Tubular	5.6 pF	50V	K		2	
C123L/R	3479210071	Electrolytic SA	10 uF	50V	M		2	
C124/125	3479210071	Electrolytic SA	10 uF	50V	M		2	
C126L/R	3479222971	Electrolytic SA	2.2 uF	50V	M		2	
C127L/R	3519056935	Ceramic Tubular	5.6 pF	50V	K		2	
C128L/R	3479210071	Electrolytic SA	10 uF	50V	M		2	
C129L/R	3479210071	Electrolytic SA	10 uF	50V	M		2	
C130-132	3479222071	Electrolytic SA	22 uF	50V	M		3	
C133	3479210071	Electrolytic SA	10 uF	50V	M		1	
C134/135	3519104935	Ceramic Tubular	0.1 uF	50V	J		2	
C136L/R	3479210071	Electrolytic SA	10 uF	50V	M		2	
C137-139	3519104935	Ceramic Tubular	0.1 uF	50V	J		3	
C301L/R	3679272120	Mylar	0.0027 uF	100V	J		2	
C302L/R	3619391110	Poly	390 pF	50V	J		2	
C303L/R	3679682120	Mylar	0.0068 uF	100V	J		2	
C304L/R	3479210071	Electrolytic SA	10 uF	50V	M		2	
C305/306	3479210071	Electrolytic SA	10 uF	50V	M		2	
C307L/R	3519391130	Ceramic Tubular	390 pF	50V	J		2	
C308L/R	3479233871	Electrolytic SA	0.33 uF	50V	M		2	
C309/310	3479210071	Electrolytic SA	0.15 uF	50V	M		2	
C311L/R	3479222971	Electrolytic SA	2.2 uF	50V	M		2	
C313L/R	3519221935	Ceramic Tubular	220 pF	50V	J		2	
C314L/R	3479210071	Electrolytic SA	10 uF	50V	M		2	
C315/316	3479222071	Electrolytic SA	22 uF	50V	M		2	
C317L/R	3519101935	Ceramic Tubular	100 pF	50V	J		2	D
C319L/R	3519101935	Ceramic Tubular	100 pF	50V	J		2	D
C319	3479222971	Electrolytic SA	2.2 uF	25V	M		1	
C320	3479210071	Electrolytic SA	0.15 uF	50V	M		1	
C321/322	3519391130	Ceramic Tubular	390 pF	50V	J		2	
C323	3479247971	Electrolytic SA	4.7 uF	50V	M		1	
C324L/R	3479210071	Electrolytic SA	0.15 uF	50V	M		2	
C325L/R	3519391130	Ceramic Tubular	390 pF	50V	J		2	
C326L/R	3519470935	Ceramic Tubular	47 pF	50V	K		2	
C327L/R	3479247971	Electrolytic SA	4.7 uF	50V	M		2	
C328	3519104935	Ceramic Tubular	0.1 uF	50V	J		1	
C329	3479210141	Electrolytic SG	100 uF	25V	M		1	
C330	3479222041	Electrolytic SA	22 uF	25V	M		1	
C331L/R	3479247971	Electrolytic SA	4.7 uF	50V	M		2	

Ref. No.	Part No.	Description					Q'ty	Version
C332L/R	3479210071	Electrolytic SA	10 uF	50V	M		2	
C333L/R	3479210071	Electrolytic SA	10 uF	50V	M		2	
C334	3479222971	Electrolytic SA	2.2 uF	50V	M		1	
C401	3479222971	Electrolytic SA	2.2 uF	50V	M		1	
C402	3519471935	Ceramic Tubular	470 pF	50V	J		1	
C403	3479247021	Electrolytic SA	47 uF	50V	M		1	
C404	3479210071	Electrolytic SA	10	50V	M		1	
C405	3479247021	Electrolytic SA	47 uF	50V	M		1	
C406	3509109130	Ceramic Disc	10 pF	50V	J		1	
C407	3479247971	Electrolytic SA	4.7 uF	50V	M		1	
C408	3479210971	Electrolytic SA	1 uF	50V	M		1	
C409	3679473120	Mylar	0.047 uF	100V	J		1	
C410/411	3519223935	Ceramic Tubular	2200 pF	50V	J		2	D
C412L/R	3479222971	Electrolytic SA	2.2 uF	50V	M		2	
C413L/R	3519471935	Ceramic Tubular	470 pF	50V	J		2	
C414L/R	3479222971	Electrolytic SA	2.2 uF	50V	M		2	
C415L/R	3509109130	Ceramic Disc	10 pF	50V	K		2	
C416	3479247021	Electrolytic SA	47 uF	50V	M		1	
C417	3479247971	Electrolytic SA	4.7 uF	50V	M		1	
C418	3479247971	Electrolytic SA	4.7 uF	50V	M		1	
C419	3479222071	Electrolytic SA	22 uF	50V	M		1	
C420	3479210071	Electrolytic SA	10 uF	50V	M		1	
C421	3479210971	Electrolytic SA	1 uF	50V	M		1	
C422	3479347121	Electrolytic SG	470 uF	10V	M		1	
C423	3679473120	Mylar	0.047 uF	100V	J		1	
C424L/R	3519223935	Ceramic Tubular	2200 pF	50V	J		2	D
C425	3519223935	Ceramic Tubular	2200 pF	50V	J		1	D
C426	3679473120	Mylar	0.047 uF	100V	J		1	
C427	3479247021	Electrolytic SA	47 uF	10V	M		1	
CNT201	4428550120	Wafer 12P					1	
CNT202	4428550090	Wafer 9P					1	
CNT203	4428550150	Wafer 15P					1	
CNT204	4428525610	Wafer 11P					1	
CNT206	4428516610	Wafer 7P					1	
CNT101	4428516310	Wafer 4P					1	
CNT502	4428525790	Wafer 3P					1	
CNT503	4428525790	Wafer 3P					1	
CNT601	4428516410	Wafer 5P					1	
CNT703	4428526345	Wafer 22P					1	
D101-103	2058322101	1N4148					3	
D104	2258599103	Zener, UZ5.1BSB					1	
D105-107	2058322101	1N4148					3	
D301-309	2058322101	1N4148					9	
D401-411	2058322101	1N4148					12	
D412	2258100135	1N4002					1	
D413	2258522120	Zener, UZ13.0BSB					1	
D414	2258100135	1N4002					1	
D415	2258522108	Zener, UZ4.3BSB					1	
D501-504⚠	2058100136	1N5402					4	
D505	2258100135	1N4002					1	
D506-509⚠	2058100136	1N5402					3	
IC101	2168007122	TC9163N					1	
IC102	2168007121	TC9162N					1	
IC103	2138017108	LC4966					1	
IC104/105	2168206103	KIA4559S					2	
IC106	2138015100	M51132L					1	
IC107	2168220139	NJM2082L					1	
IC108	2168000113	LM324					1	
IC301/302	2168206103	KIA4559S					2	
IC303	2168220140	M5532L					1	
IC304-307	2168206103	KIA4559S					4	
IC401	2178317138	STK400-090					1	
IC402	2168601106	GL7818					1	
IC502	2168600106	KA7918					1	

Ref. No.	Part No.	Description					Q'ty	Version
L401-403	2648001010	Coil, Inductor 0.5uH					3	
Q101	2218207106	2SD117Y					1	
Q102/103	2208222105	DTA114YS, Switching, PNP, Silicon					2	
Q104-107	2208622106	DTC114YS, Switching, NPN, silicon					4	
Q108	2208206105	BKTA1266Y/KTA1015Y.Switching,PNP,silicon					1	
Q109L/R	2208606112	KTD1302, Muting, NPN, silicon					2	
Q301	2208206105	BKTA1266Y/KTA1015Y.Switching,PNP,silicon					1	
Q302-308	2208606112	KTD1302, Muting, NPN, silicon					7	
Q309/310	2208222105	DTA114YS, Switching, PNP, Silicon					2	
Q311/312	2208606112	DTD1302, Muting, NPN, silicon					2	
Q313	2208222105	DTA114YS, Switching, PNP, Silicon					1	
Q314/315	2208606112	KTD1302, Muting, NPN, silicon					2	
Q316L/R	2208622108	DTC114TS, Switching, NPN, silicon					2	
Q401	2208606112	KTD1302, Muting, NPN, silicon					1	
Q402	2208206105	BKTA1266Y/KTA1015Y.Switching,PNP,silicon					1	
Q403/404	2208606112	KTD1302, Muting, NPN, silicon					2	
Q405	2208206105	BKTA1266Y/KTA1015Y.Switching,PNP,silicon					1	
Q406-409	2208606104	KTC1815Y/BKTC3198Y,Switching,NPN,silicon					4	
Q410	2208206105	BKTA1266Y/KTA1015Y.Switching,PNP,silicon					1	
Q411/412	2208606104	KTC1815Y/BKTC3198Y,Switching,NPN,silicon					2	
Q413/414	2208606112	KTD1302, Muting, NPN, silicon					2	
Q415	2208222105	DTA114YS, Switching, PNP, Silicon					1	
R101L/R	3069471970	Carbon Film	470 ohm	1/5W	J		2	
R102L/R	3069332970	Carbon Film	3.3k ohm	1/5W	J		2	
R103L/R	3069471970	Carbon Film	470 ohm	1/5W	J		2	
R104L/R	3069471970	Carbon Film	470 ohm	1/5W	J		2	
R105L/R	3069471970	Carbon Film	470 ohm	1/5W	J		2	
R106L/R	3069471970	Carbon Film	470 ohm	1/5W	J		2	
R107L/R	3069471970	Carbon Film	470 ohm	1/5W	J		2	
R108L/R	3069471970	Carbon Film	470 ohm	1/5W	J		2	
R109L/R	3069333970	Carbon Film	33k ohm	1/5W	J		2	
R110-115	3069102970	Carbon Film	1k ohm	1/5W	J		6	
R116-118	3069104970	Carbon Film	100k ohm	1/5W	J		3	
R119-121	3069101970	Carbon Film	100 ohm	1/5W	J		3	
R122L/R	3069473970	Carbon Film	47k ohm	1/5W	J		2	
R123L/R	3069472970	Carbon Film	4.7k ohm	1/5W	J		2	
R124L/R	3069104970	Carbon Film	100k ohm	1/5W	J		2	
R125/126	3069101970	Carbon Film	100 ohm	1/5W	J		2	
R127L/R	3069473970	Carbon Film	47k ohm	1/5W	J		2	
R128L/R	3069472970	Carbon Film	4.7k ohm	1/5W	J		2	
R129L/R	3069104970	Carbon Film	100k ohm	1/5W	J		2	
R130	3069221970	Carbon Film	220 ohm	1/5W	J		1	
R131L/R	3069103970	Carbon Film	10k ohm	1/5W	J		2	
R132/133	3069103970	Carbon Film	10k ohm	1/5W	J		2	
R134/135	3069223970	Carbon Film	20k ohm	1/5W	J		2	
R136	3069103970	Carbon Film	10k ohm	1/5W	J		1	
R137	3069183970	Carbon Film	18k ohm	1/5W	J		1	
R138	3069103970	Carbon Film	10k ohm	1/5W	J		1	
R139	3069474970	Carbon Film	470k ohm	1/5W	J		1	
R140	3069106970	Carbon Film	10M ohm	1/5W	J		1	
R141	3069104970	Carbon Film	100k ohm	1/5W	J		1	
R142	3069103970	Carbon Film	10k ohm	1/5W	J		1	
R143	3069911970	Carbon Film	910 ohm	1/5W	J		1	
R144/145	3069103970	Carbon Film	10k ohm	1/5W	J		2	
R146/147	3069104970	Carbon Film	100k ohm	1/5W	J		2	
R148-151	3069102970	Carbon Film	1k ohm	1/5W	J		4	
R152	3069103970	Carbon Film	10k ohm	1/5W	J		1	
R153	3069332970	Carbon Film	3.3k ohm	1/5W	J		1	
R301L/R	3069103970	Carbon Film	10k ohm	1/5W	J		2	
R302L/R	3069822970	Carbon Film	8.2k ohm	1/5W	J		2	
R303L/R	3069822970	Carbon Film	8.2k ohm	1/5W	J		2	
R304/305	3069101970	Carbon Film	100 ohm	1/5W	J		2	
R306/307	3069103970	Carbon Film	10k ohm	1/5W	J		2	
R308L/R	3069102970	Carbon Film	1k ohm	1/5W	J		2	

Ref. No.	Part No.	Description					Q'ty	Version
R309L/R	3069153970	Carbon Film	15k ohm	1/5W	J		2	
R310	3069101970	Carbon Film	100 ohm	1/5W	J		1	
R311L/R	3069104970	Carbon Film	100k ohm	1/5W	J		2	
R312/313	3069101970	Carbon Film	100 ohm	1/5W	J		2	
R314L/R	3069333970	Carbon Film	33k ohm	1/5W	J		2	
R315L/R	3069622970	Carbon Film	6.2k ohm	1/5W	J		2	
R316L/R	3069751970	Carbon Film	750 ohm	1/5W	J		2	
R317L/R	3069103970	Carbon Film	10k ohm	1/5W	J		2	
R318/319	3069101970	Carbon Film	100 ohm	1/5W	J		2	
R320	3069391970	Carbon Film	390 ohm	1/5W	J		1	
R321L/R	3069202970	Carbon Film	2k ohm	1/5W	J		2	
R322	3069102970	Carbon Film	1k ohm	1/5W	J		1	
R323	3069332970	Carbon Film	3.3k ohm	1/5W	J		1	
R324	3069103970	Carbon Film	10k ohm	1/5W	J		1	
R325	3069105970	Carbon Film	1M ohm	1/5W	J		1	
R326	3069103970	Carbon Film	10k ohm	1/5W	J		1	
R327/328	3069332970	Carbon Film	3.3k ohm	1/5W	J		2	
R329	3069103970	Carbon Film	10k ohm	1/5W	J		1	
R330	3069474970	Carbon Film	470k ohm	1/5W	J		1	
R332	3069102970	Carbon Film	1k ohm	1/5W	J		1	
R333	3069473970	Carbon Film	47k ohm	1/5W	J		1	
R334	3069622970	Carbon Film	6.2k ohm	1/5W	J		1	
R335	3069432970	Carbon Film	4.3k ohm	1/5W	J		1	
R336	3069104970	Carbon Film	100k ohm	1/5W	J		1	
R337	3069102970	Carbon Film	1k ohm	1/5W	J		1	
R338/339	3069101970	Carbon Film	100 ohm	1/5W	J		2	
R340L/R	3069102970	Carbon Film	1k ohm	1/5W	J		2	
R341L/R	3069473970	Carbon Film	47k ohm	1/5W	J		2	
R342L/R	3069622970	Carbon Film	6.2k ohm	1/5W	J		2	
R343L/R	3069432970	Carbon Film	4.3k ohm	1/5W	J		2	
R344L/R	3069104970	Carbon Film	100k ohm	1/5W	J		2	
R345L/R	3069102970	Carbon Film	1k ohm	1/5W	J		2	
R346/347	3069101970	Carbon Film	100 ohm	1/5W	J		2	
R348	3069202970	Carbon Film	2k ohm	1/5W	J		1	
R349/350	3069101970	Carbon Film	100 ohm	1/5W	J		2	
R351	3069104970	Carbon Film	100k ohm	1/5W	J		1	
R352L/R	3069122970	Carbon Film	1.2k ohm	1/5W	J		2	
R353	3069105970	Carbon Film	1M ohm	1/5W	J		1	
R354	3069471970	Carbon Film	470 ohm	1/5W	J		1	
R355/356	3069332970	Carbon Film	3.3k ohm	1/5W	J		2	
R357L/R	3069104970	Carbon Film	100k ohm	1/5W	J		2	
R358L/R	3069122970	Carbon Film	1.2k ohm	1/5W	J		2	
R359	3069332970	Carbon Film	3.3k ohm	1/5W	J		1	
R360	3069332970	Carbon Film	3.3k ohm	1/5W	J		1	
R361	3069105970	Carbon Film	1M ohm	1/5W	J		1	
R362	3069471970	Carbon Film	470 ohm	1/5W	J		1	
R363/364	3069101970	Carbon Film	100 ohm	1/5W	J		2	
R365L/R	3069104970	Carbon Film	100k ohm	1/5W	J		2	
R366	3069332970	Carbon Film	3.3k ohm	1/5W	J		1	
R367	3069105970	Carbon Film	1M ohm	1/5W	J		1	
R368/369	3069102970	Carbon Film	1k ohm	1/5W	J		2	
R370/371	3069335970	Carbon Film	3.3M ohm	1/5W	J		2	
R401/402	3069102970	Carbon Film	1k ohm	1/5W	J		2	
R403	3069273970	Carbon Film	27k ohm	1/5W	J		1	
R404	3069106970	Carbon Film	10M ohm	1/5W	J		1	
R405	3069102970	Carbon Film	1k ohm	1/5W	J		1	
R406/407	3069103970	Carbon Film	10k ohm	1/5W	J		2	
R408/409	3069101970	Carbon Film	100 ohm	1/5W	J		2	
R410	3069273970	Carbon Film	27k ohm	1/5W	J		1	
R411	3069821970	Carbon Film	820 ohm	1/5W	J		1	
R412	3069152970	Carbon Film	1.5k ohm	1/5W	J		1	
R413	3059278682	Cement	0.27 ohm	3W	1			
R414	3069473970	Carbon Film	47k ohm	1/5W	J		1	
R415	3069153970	Carbon Film	15k ohm	1/5W	J		1	

Ref. No.	Part No.	Description					Q'ty	Version
R416L/R	3069102970	Carbon Film	1k ohm	1/5W	J		2	
R417L/R	3069102970	Carbon Film	1k ohm	1/5W	J		2	
R418	3069106970	Carbon Film	10M ohm	1/5W	J		1	
R419/420	3069103970	Carbon Film	10k ohm	1/5W	J		2	
R421/422	3069102970	Carbon Film	1k ohm	1/5W	J		2	
R423L/R	3069273970	Carbon Film	27k ohm	1/5W	J		2	
R424L/R	3069243970	Carbon Film	24k ohm	1/5W	J		2	
R425L/R	3069102970	Carbon Film	1k ohm	1/5W	J		2	
R426/427	3069101970	Carbon Film	100 ohm	1/5W	J		2	
R428L/R	3069122970	Carbon Film	1.2k ohm	1/5W	J		2	
R429L/R	3059278682	Cement	0.27 ohm	3W			2	
R430L/R	3069473970	Carbon Film	47k ohm	1/5W	J		2	
R431L/R	3069153970	Carbon Film	15k ohm	1/5W	J		2	
R432	3069103970	Carbon Film	10k ohm	1/5W	J		1	
R433	3069123970	Carbon Film	12k ohm	1/5W	J		1	
R434	3029331472	Mylar	330 ohm	1W			1	
R435-438	3069100970	Carbon Film	10 ohm	1/5W	J		4	
R439/440	3069223970	Carbon Film	22k ohm	1/5W	J		2	
R441	3069102970	Carbon Film	1k ohm	1/5W	J		1	
R442	3069101970	Carbon Film	100 ohm	1/5W	J		1	
R443	3069103970	Carbon Film	10k ohm	1/5W	J		1	
R444/445	3069473970	Carbon Film	47k ohm	1/5W	J		2	
R446	3069513970	Carbon Film	51k ohm	1/5W	J		1	
R447	3069152970	Carbon Film	1.5k ohm	1/5W	J		1	
R448/449	3069103970	Carbon Film	10k ohm	1/5W	J		2	
R450	3069123970	Carbon Film	12k ohm	1/5W	J		1	
R451	3069103970	Carbon Film	10k ohm	1/5W	J		1	
R452	3029331472	Mylar	330 ohm	1W			1	
R453	3069123970	Carbon Film	12k ohm	1/5W	J		1	
R454-457	3069220970	Carbon Film	22 ohm	1/5W	J		4	
R458	3069123970	Carbon Film	12k ohm	1/5W	J		1	
R459	3069102970	Carbon Film	1k ohm	1/5W	J		1	
R460	3069822970	Carbon Film	8.2k ohm	1/5W	J		1	
R501/502	3029220572	Mylar	22 ohm	2W			2	
R503	3029100572	Mylar	10 ohm	2W			1	
F504/505	5508202830	Fuse, NB 3.5A 120V					2	
CNT401	2438012200	Ass'y Posistor, PTH9M04BE222 2F333					1	
RLY301	5528001020	Relay, RZ 12V					1	
RLY401/402	5528001630	Relay, OSA-SS-224DM5					2	
F504/505	⚠5508202830	Fuse, NB 3.5A 120V					2	
A-A	152622101013	Wire 100mm					1	
B-B	152622101613	Wire 160mm					1	
C-C	152622022413	Wire 240mm					1	
H-H	152624030844	Wire 80mm					1	
G-G	152624020643	Wire 60mm					1	
G502	4235007310	Terminal Ground					1	
P1-1	**054021010019**	**ASS'Y P.C.B VCR**						
13	4438109810	VCR Jack 3P					1	
C104L/R	3519101935	Ceramic Tubular	100 pF	50V	J		2	
C141/142	3519104935	Ceramic Tubular	0.1 uF	50V	K		2	
R101L/R	3069471970	Carbon Film	470 ohm	1/5W	J		2	
D107-110	2058322101	1N4148, Rectifier					4	
CNT101	435206248532	Lead Ass'y 6P 240 mm					1	
W101	152624101258	Lug HI - WP #24BK LF 120 0.5/0.5					1	
P1-2	**054021010020**	**ASS'Y P.C.B INDICATOR**						
D211	2371124701	LED SLR-34URCF25					1	
CNT205	435102123181	Lead Ass'y 2P 180mm					1	
P2	**054021010021**	**ASS'Y P.C.B FRONT**						
15	4658003710	Switch Tact					20	
41	6715015560	Sponge					1	
C701	3679103120	Mylar	0.01	100V	J		1	

Ref. No.	Part No.	Description					Q'ty	Version
C702	3519101935	Ceramic Tubular	100 pF	50V	J		1	
C703	3519102935	Ceramic Tubular	1000 pF	50V	J		1	
C704	3479310121	Electrolytic SG	100 uF	0V	M		1	
C705	3519102935	Ceramic Tubular	1000 pF	50V	J		1	
C706	3438147312	Electrolytic SA	0.047 uF	5.5V	M		1	
C708	3479210071	Electrolytic SA	10 uF	50V	M		1	
C709	3519103935	Ceramic Tubular	0.01 uF	50V	J		1	
C710/711	3519104935	Ceramic Tubular	0.1 uF	50V	K		2	
C712	3519102935	Ceramic Tubular	1000 pF	50V	J		1	
C713/714	3519101935	Ceramic Tubular	100 pF	50V	J		2	
C715/716	3679473120	Mylar	0.047 uF	100V	J		2	
C717-721	3519101935	Ceramic Tubular	100 pF	50V	J		5	
CNT701	436206243332	Lead Ass'y 6P 240 mm					1	
CNT702	436207263332	Lead Ass'y 7P 260 mm					1	
CNT703	4428526346	Wafer 5P, FPC					1	
D701	2258599103	Zener, UZ5.1BSB					1	
D702-704	2058322101	1N4148, Rectifier					3	
D705	2258599107	Zener, UZ9.1BSC					1	
D706-712	2371124701	LED SLR-34URCF25					7	
D713-718	2058322101	1N4148, Rectifier					6	
IC701	2138313206	CPU, uPD 75212ACW-A77					1	
IC702	2408000131	Remote Sensor					1	
IC703/704	2138009115	MC14094					2	
R701	3069391970	Carbon Film	390 ohm	1/5W	J		1	
R702	3069562970	Carbon Film	5.6k ohm	1/5W	J		1	
R703	3069391970	Carbon Film	390 ohm	1/5W	J		1	
R704	3069390970	Carbon Film	39 ohm	1/5W	J		1	
R705	3069105970	Carbon Film	1M ohm	1/5W	J		1	
R706	3069103970	Carbon Film	10k ohm	1/5W	J		1	
R707	3069223970	Carbon Film	22k ohm	1/5W	J		1	
R708	3069473970	Carbon Film	47k ohm	1/5W	J		1	
R709	3069391970	Carbon Film	390 ohm	1/5W	J		1	
R710/711	3069103970	Carbon Film	10k ohm	1/5W	J		2	
R712	3069682970	Carbon Film	6.8k ohm	1/5W	J		1	
R713-716	3069102970	Carbon Film	1k ohm	1/5W	J		4	
R717-722	3069391970	Carbon Film	390 ohm	1/5W	J		6	
R723-727	3069102970	Carbon Film	1k ohm	1/5W	J		5	
R728-731	3069123970	Carbon Film	12k ohm	1/5W	J		4	
Q701	2028106106	KTA 817A					1	
Q702/703	2208606104	KTC1815Y/BKTC3198Y, Switching, NPN, silicon					2	
Q704-711	2208622106	DTC114YS, Switching, NPN, silicon					8	
FL	2328130925	FL, FIP 11CM9					1	
X701	3938101880	Resonator, CTS 4.19M GW					1	
CNT703	4118622159	Card Cable, 22P 150mm					1	
P2-1	**05402101002**	**ASS'Y P.C.B DSP**					**2**	
C201L/R	3479210071	Electrolytic SA	10 uF	50V	M		2	
C202L/R	3479210071	Electrolytic SA	10 uF	50V	M		2	
C203/204	3479210071	Electrolytic SA	10 uF	50V	M		2	
C205L/R	3679102120	Mylar	0.001 uF	100V	J		2	
C206L/R	3519121935	Ceramic Tubular	120 pF	50V	J		2	
C207L/R	3479210071	Electrolytic SA	10 uF	50V	M		2	
C208/209	3519104935	Ceramic Tubular	0.1 uF	50V	K		2	
C210/211	3619332110	Poly	3300 pF	50V	J		2	
C212L/R	3519820935	Ceramic Tubular	82 pF	50V	K		2	
C213L/R	3679272120	Myla	0.0027 uF	100V	J		2	
C214L/R	3619391110	Poly	390 pF	50V	J		2	
C215L/R	3679682120	Mylar	0.0068 uF	100V	J		2	
C216L/R	3479210071	Electrolytic SA	10 uF	50V	M		2	
C217/218	3479210071	Electrolytic SA	10 uF	50V	M		2	
C219L/R	3479210071	Electrolytic SA	10 uF	50V	M		2	
C220L/R	3509680130	Ceramic Disc	68 pF	50V	J		2	
C221L/R	3479210071	Electrolytic SA	10 uF	50V	M		2	
C222	3479210071	Electrolytic SA	10 uF	50V	M		1	

Ref. No.	Part No.	Description				Q'ty	Version
C223	3509391130	Ceramic Disc	390 pF	50V	J	1	
C224	3479210071	Electrolytic SA	10 uF	50V	M	1	
C225	3519104935	Ceramic Tubular	0.1 uF	50V	K	1	
C226	3479310121	Electrolytic SG	100 uF	10V	M	1	
C227/228	3479210071	Electrolytic SA	10	50V	M	2	
C229	3509680130	Ceramic Disc	68 pF	50V	J	1	
C230	3479210071	Electrolytic SA	10 uF	50V	M	1	
C232/233	3519101935	Ceramic Tubular	100 pF	50V	J	2	
C234	3519102935	Ceramic Tubular	1000 pF	50V	J	1	
C235	3069224120	Mylar	0.22 uF	100V	J	1	
C236L/R	3479222872	Electrolytic SA	0.22 uF	50V	M	2	
C237L/R	3509391130	Ceramic Disc	390 pF	50V	J	2	
C238L/R	3479210071	Electrolytic SA	10 uF	50V	M	2	
C239/240	3479210071	Electrolytic SA	10 uF	50V	M	2	
C241	3519102935	Ceramic Tubular	1000 pF	50V	J	1	
C242/243	3519101935	Ceramic Tubular	100 pF	50V	J	2	
C244/245	3479322141	Electrolytic SG	220 uF	25V	M	2	
C246/247	3519104935	Ceramic Tubular	0.1 uF	50V	K	2	
C248	3479322121	Electrolytic SG	220 uF	10V	M	1	
C249	3519104935	Ceramic Tubular	0.1 uF	50V	K	1	
C250	3479322121	Electrolytic SG	220 uF	10V	M	1	
C251	3519104935	Ceramic Tubular	0.1 uF	50V	K	1	
C252/253	3509229130	Ceramic Disc	22 pF	50V	J	2	
C254	3479247971	Electrolytic SA	4.7 uF	50V	M	1	
C255/256	3519104935	Ceramic Tubular	0.1 uF	50V	K	2	
C257L/R	3519121935	Ceramic Tubular	120 pF	50V	J	2	
C258L/R	3479210071	Electrolytic SA	10 uF	50V	M	2	
C260L/R	3479222872	Electrolytic SA	0.22 uF	50V	M	2	
C261L/R	3519391130	Ceramic Tubular	390 pF	100V	J	2	
C262L/R	3479210071	Electrolytic SA	10 uF	50V	M	2	
C265/267	3519104935	Ceramic Tubular	0.1 uF	50V	K	2	
C268	3479210071	Electrolytic SA	10 uF	50V	M	1	
C269	3479210071	Electrolytic SA	10 uF	50V	M	1	
CNT201	4428560120	Wafer 12P				1	
CNT202	4428560090	Wafer 9P				1	
CNT203	4428560150	Wafer 15P				1	
D201-210	2058322101	1N4148, Rectifier				10	
D212	2058322101	1N4148, Rectifier				1	
IC201/202	2168206103	KIA4559S/KIA75559S, Headphone Amp.				2	
IC203	2168220139	NJM2082L				1	
IC204	2168206103	KIA4559S/KIA75559S, Headphone Amp.				1	
IC205	2168007121	TC9162N				1	
IC206/207	2168220139	NJM2082L				2	
IC208	2168206103	KIA4559S/KIA75559S, Headphone Amp.				1	
IC209	2138007124	TC9176P				1	
IC210	2168206103	KIA4559S/KIA75559S, Headphone Amp.				1	
IC211	2168601101	GL7805. Reguartor				1	
IC212	2138000195	YM7306C				1	
IC213	2138402115	41C464P-08, D RAM				1	
IC214	2168220139	NJM2082L				1	
IC215	2168206103	KIA4559S/KIA75559S, Headphone Amp.				1	
L201/202	2658301130	LPF 257BLR-K5013N				2	
L203/204	2648701110	Bead Core 6ϕ				2	
R201L/R	3069104970	Carbon Film	100k ohm	1/5W	J	2	
R202L/R	3069473970	Carbon Film	47k ohm	1/5W	J	2	
R203L/R	3069104970	Carbon Film	100k ohm	1/5W	J	2	
R204L/R	3069101970	Carbon Film	100 ohm	1/5W	J	2	
R205L/R	3069472970	Carbon Film	4.7k ohm	1/5W	J	2	
R206L/R	3069104970	Carbon Film	100k ohm	1/5W	J	2	
R207L/R	3069472970	Carbon Film	4.7k ohm	1/5W	J	2	
R208L/R	3069103970	Carbon Film	10k ohm	1/5W	J	2	
R209L/R	3069103970	Carbon Film	10k ohm	1/5W	J	2	
R210L/R	3069[illegible]970	Carbon Film	100 ohm	1/5W	J	2	
R211	3069[illegible]970	Carbon Film	5.6k ohm	1/5W	J	1	

Ref. No.	Part No.	Description				Q'ty	Version
R212/213	3069335970	Carbon Film	3.3M ohm	1/5W	J	2	
R214	3069472970	Carbon Film	4.7k ohm	1/5W	J	1	
R215L/R	3069103970	Carbon Film	10k ohm	1/5W	J	2	
R216L/R	3069822970	Carbon Film	8.2k ohm	1/5W	J	2	
R217L/R	3069822970	Carbon Film	8.2k ohm	1/5W	J	2	
R218L/R	3069101970	Carbon Film	100 ohm	1/5W	J	2	
R219L/R	3069104970	Carbon Film	100k ohm	1/5W	J	2	
R220/221	3069101970	Carbon Film	100 ohm	1/5W	J	2	
R222-224	3069102970	Carbon Film	1k ohm	1/5W	J	3	
R225/226	3069103970	Carbon Film	10k ohm	1/5W	J	2	
R227	3069105970	Carbon Film	1M ohm	1/5W	J	1	
R228/229	3069103970	Carbon Film	10k ohm	1/5W	J	2	
R230/231	3069101970	Carbon Film	100 ohm	1/5W	J	2	
R232	3069912970	Carbon Film	9.1k ohm	1/5W	J	1	
R233/234	3069103970	Carbon Film	10k ohm	1/5W	J	2	
R235	3069101970	Carbon Film	100 ohm	1/5W	J	1	
R236	3069104970	Carbon Film	100k ohm	1/5W	J	1	
R237/238	3069101970	Carbon Film	100 ohm	1/5W	J	2	
R239L/R	3069103970	Carbon Film	10k ohm	1/5W	J	2	
R240L/R	3069103970	Carbon Film	10k ohm	1/5W	J	2	
R241L/R	3069103970	Carbon Film	10k ohm	1/5W	J	2	
R242	3069472970	Carbon Film	4.7k ohm	1/5W	J	1	
R243/244	3069101970	Carbon Film	100 ohm	1/5W	J	2	
R246	3069103970	Carbon Film	10k ohm	1/5W	J	1	
R247/248	3069101970	Carbon Film	100 ohm	1/5W	J	2	
R249L/R	3069473970	Carbon Film	47k ohm	1/5W	J	2	
R250L/R	3069622970	Carbon Film	6.2k ohm	1/5W	J	2	
R251L/R	3069272970	Carbon Film	2.7k ohm	1/5W	J	2	
R253L/R	3069103970	Carbon Film	10k ohm	1/5W	J	2	
R253/254	3069101970	Carbon Film	100 ohm	1/5W	J	2	
R255-257	3069102970	Carbon Film	1k ohm	1/5W	J	3	
R258	3069105970	Carbon Film	1M ohm	1/5W	J	1	
R259	3069103970	Carbon Film	10k ohm	1/5W	J	1	
R260-262	3069104970	Carbon Film	100k ohm	1/5W	J	3	
R263-265	3069102970	Carbon Film	1k ohm	1/5W	J	3	
R266/267	3069101970	Carbon Film	100 ohm	1/5W	J	2	
R268	3069562970	Carbon Film	5.6k ohm	1/5W	J	1	
R269	3069472970	Carbon Film	4.7k ohm	1/5W	J	1	
R270/271	3069101970	Carbon Film	100 ohm	1/5W	J	2	
R272/273	3069335970	Carbon Film	3.3M ohm	1/5W	J	2	
R274L/R	3069473970	Carbon Film	47k ohm	1/5W	J	2	
R275	3069101970	Carbon Film	100 ohm	1/5W	J	1	
R276L/R	3069224970	Carbon Film	220k ohm	1/5W	J	2	
R277L/R	3069622970	Carbon Film	6.2k ohm	1/5W	J	2	
R278L/R	3069302970	Carbon Film	3k ohm	1/5W	J	2	
R279L/R	3069473970	Carbon Film	47k ohm	1/5W	J	2	
R285/286	3069101970	Carbon Film	100 ohm	1/5W	J	2	
R287	3029330472	Metal Film	33 ohm	1W	J	1	
R288	3069101970	Carbon Film	100 ohm	1/5W	J	1	
W201	152624101258	Lug HI - WP #24BK LF 120 0.5/0.5				1	
P2-2	**054021010023**	**ASS'Y P.C.B VOLUME**					
14	3208061010	Motor VR				1	
C259	3479310141	Electrolytic SG	100	25V	M	1	
C263/264	3479310121	Electrolytic SG	100	10V	M	2	
CNT204	435211168732	Lead Ass'y 11P 160mm				1	
CNT205	4426508210	Wafer 2P				1	
CNT206	435207208232	Lead Ass'y 7P 200mm				1	
W501	152624101258	Lug HI - WP #24BK LF 120 0.5/0.5				1	
IC216	2168007204	TA7291S, Motor Control				1	
R280L/R	3069102970	Carbon Film	1k ohm	1/5W	J	2	
R281	3069391970	Carbon Film	390 ohm	1/5W	J	1	
R282	3069392970	Carbon Film	3.9k ohm	1/5W	J	1	
R283	3029470472	Metal Film	47 ohm	1W	J	1	

Ref. No.	Part No.	Description				Q'ty	Version
R284	3069103970	Carbon Film	10k ohm	1/5W	J	1	
VR201	3208061010	VR 47K,Rotary with Nut, Volume				1	
P2-3	**054021010024**	**ASS'Y P.C.B POWER**					
26 ⚠	7505206220	Heat Sink REG TR, AL				1	
29 ⚠	4448103910	AC Outlet 1P				1	Dom
⚠	4448103210	AC Outlet 1P				1	A
⚠	4448103610	AC Outlet 1P				1	B,C,D,F
30 ⚠	4618006510	Voltage Selector 6P				1	Dom,B
31 ⚠	4618006610	Voltage Selector 3P				1	Dom,B
	2828072607	Stand-by Transformer				1	
C501-505	3509103450	Ceramic Disc	0.01 uF	400V	J	5	D
C506/507	3419533230	Electrolytic HS	3300 uF	50V	M	2	
C508	3479347169	Electrolytic SG	470 uF	35V	M	1	
C509-513	3509103450	Ceramic Disc	0.01 uF	400V	J	5	D
C514/515	3409322267	Electrolytic SG	2200 uF	35V	M	2	
C516/C517	3479222971	Electrolytic SA	2.2 uF	50V	M	2	
C518/C519	3679473120	Mylar	0.047 uF	100V	J	2	
C520	3479310171	Electrolytic SG	100 uF	50V	M	1	
C521	3409347169	Electrolytic SG	470 uF	35V	M	1	
C522	3549472407	Ceramic Disc	0.0047 uF	400V	J	1	
C523	3479222071	Electrolytic SA	22 uF	50V	M	1	
C524	3479210971	Electrolytic SA	1 uF	50V	M	1	
CNT501	4428525800	Wafer 4P				1	
CNT504	4428505610	Wafer 4P				1	
CNT701	4428516510	Wafer 6P				1	
IC503	2168601110	GL7805. Reguartor				1	
R504	3069621970	Carbon Film	620 ohm	1/5W	J	1	
R505	3069153970	Carbon Film	15k ohm	1/5W	J	1	
R506/507	3029100472	Metal Film	10 ohm	1W	J	2	
R508/509	3069621970	Carbon Film	620 ohm	1/5W	J	2	
R510	3069332970	Carbon Film	3.3k ohm	1/5W	J	1	
D510-515	2258100135	1N4002, Switching				6	
D516	2258599105	DZ6.2BM. Zener				1	
D517/518	2258599109	Zener, UZ15.0BSC				2	
D519	2258100135	1N4002, Switching				1	
Q501	2208606114	TR, MPSA06, Switching, NPN, silicon				1	
RLY501	5528001620	OST-S-112DM(TV-5)				1	
P1/P2	4225001410	Pin Solder				2	
G501	4235007310	Terminal ground				1	
F501 ⚠	5508202503	Fuse NB 2.5A 250V, 5.2x20				1	
F502 ⚠	5508202230	Fuse NB 1.5A 250V, 5.2x20				1	
F503 ⚠	5508201430	Fuse 315mA NB 125V, Normal Blow				1	
P2-4	**054021010025**	**ASS'Y P.C.B VIDEO**					
34	7505206210	Heat Sink REG TR, AL				1	
35	4438113310	Video Jack 4P				2	
C601-604	3479333061	Electrolytic SG	33	35V	M	4	
C605-608	3479347121	Electrolytic SG	470 uF	10V	M	4	
C613	3479333061	Electrolytic SG	33 uF	35V	M	1	
C614	3479210971	Electrolytic SA	1 uF	50V	M	1	
CNT601	436205103332	Lead Ass'y 5P 10 mm				1	
CNT701	4428516110	Wafer 2P				1	
CNT702	4428516610	Wafer 7P				1	
IC601	2168027106	BA7625, VIdeo Control	1				
IC602	2168601101	GL7805. Reguartor	1				
R601-608	3069750970	Carbon Film	75 ohm	1/5W	J	8	
R609-612	3069151970	Carbon Film	150 ohm	1/5W	J	4	
R613-616	3069101970	Carbon Film	100 ohm	1/5W	J	4	
R617-619	3029330572	Metal Film	33 ohm	2W	J	3	
R620	3069750970	Carbon Film	75 ohm	1/5W	J	1	
Q601-604	2208206105	BKTA1266Y/KTA1015Y. Switching, PNP, silicon					

Ref. No.	Part No.	Description				Q'ty	Version
P3	**054021010026**	**ASS'Y P.C.B COMMANDER**					
X-TAL	3908101300	X-Tal, 8.4672 MHz				1	
C801/802	3519101935	Ceramic Tubular	100 pF	50V	J	2	
C803	3479247021	Electrolytic SA	47 uF	10V	M	1	
D801	2028322101	1N4148, Rectifier				1	
D802	2408001100	ELZ-K-OEC				1	
IC801	2138013122	uPD6122-002				1	
Q801	2208606112	KTD1302, Muting, NPN, silicon				1	
R801/802	3069224970	Carbon Film	220k ohm	1/5W	J	2	
R803	3069229970	Carbon Film	2.2 ohm	1/5W	J	1	
R804	3069102970	Carbon Film	1k ohm	1/5W	J	1	
X805	3938001001	Resonator, CSB455E				1	
7	6555605610	Spring Battery (C)				1	
9	6555605410	Spring Battery (D)				1	

SEMICONDUCTOR LEAD IDENTIFICATION & INTERNAL DIAGRAM

TC9163N(NJU7312L) : IC101

Pin No	Terminal	Description
1	VSS	Negative power supply terminal(-15V)
2	VDP	Input/output terminals
3	VCR1	Audio signal (left channel)
4	VCR2	Audio signal (left channel)
5	L COM1	Audio signal (left channel)
6	VCR2	VCR1 Record out terminals
7	VDP	Audio signal (left channel)
8	Line in	Audio signal (left channel)
9	L COM2	
10	Audio Injection	
11	Audio Injection	
12	L COM3	
13	Strobe	Serial contreol terminal
14	Ground	

Pin No.	Terminal	Description
15	Clock	Serial control terminal
16	Data	Serial control terminal
17	R COM3	
18	Audio Injection	
19	Audio Injection	
20	R COM2	
21	Line in	Input/output terminals of audio signal (right channel)
22	VDP	
23	VCR2	
24	R COM1	
25	VCR2	
26	VCR1	
27	VDP	
28	VDD	Positive power supply terminal(+15V)

Block Diagram

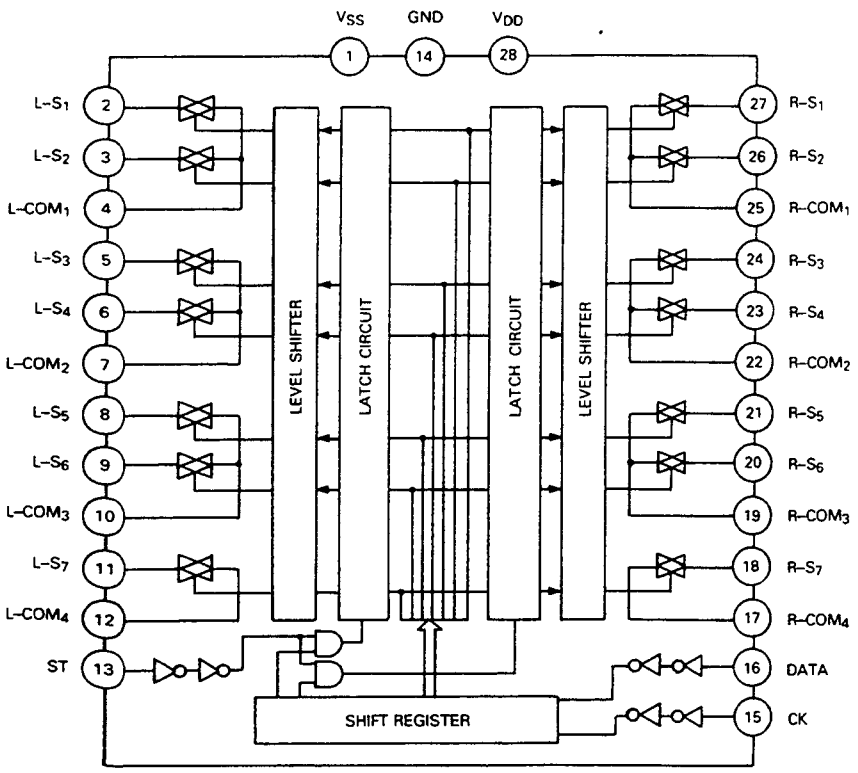

Pin Assignment

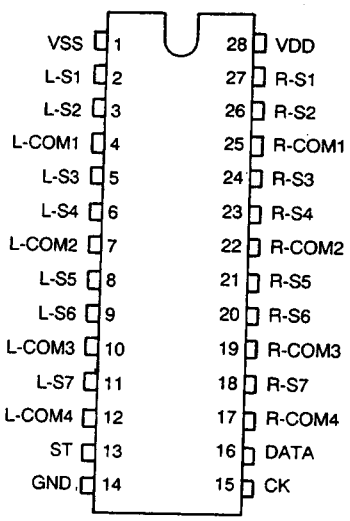

www.manualscenter.com

TC9162N(NJU7311L) : IC201,IC205

Pin No	Terminal	Description
1	VSS	Negative power supply terminal(-15V)
2	Center in	From SSM-2126 pin No.25
3	Stadium R CH	From IC113
4	Center.Rear R CH out	To TC9176 pin No. 14
5	Stadium L CH/Theater	From IC113
6	Prologic	From SSM-2126 pin No.30
7	rear L CH	To TC9176 pin No. 3
8	Center out	To Center AMP in
9	Rear R CH out	To rear AMP in
10	Center rear R CH in	From IC116
11	Rear L CH in	From IC116
12	Rear R CH out	To rear AMP
13	Strobe	Serial contreol terminal
14	Ground	

Pin No.	Terminal	Description
15	Clock	Serial control terminal
16	Data	
17	Prologic in	To IC107
18	Dolby in	From IC111 pin No.8
19	Front R CH out	To CNT105
20	Prologic R CH in	From SSM-2126 pin No.26
21	By-Pass R CH in	
22	Front L CH out	To CNT105
23	Prologic L CH in	From SSM-2126 pin No.24
24	By-Pass L CH in	
25	Delay in	To IC107
26	Stadium in	From IC113
27	Theater in	From IC113
28	VDD	Positive power supply terminal(+15V)

Block Diagram

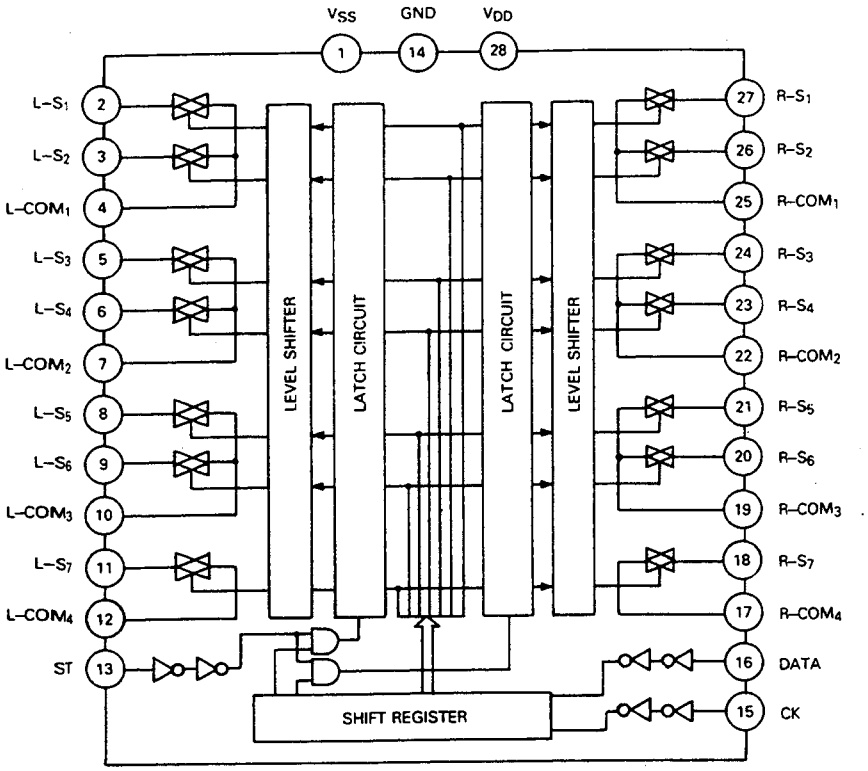

Pin Assignment

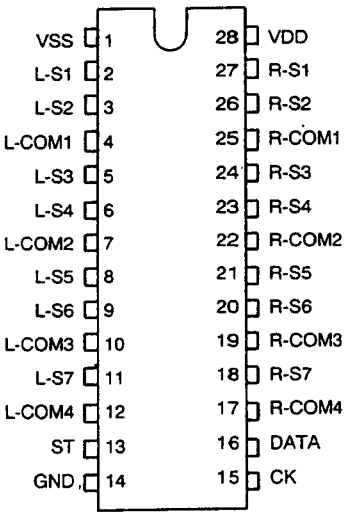

TC9176P : IC209

Block Diagram

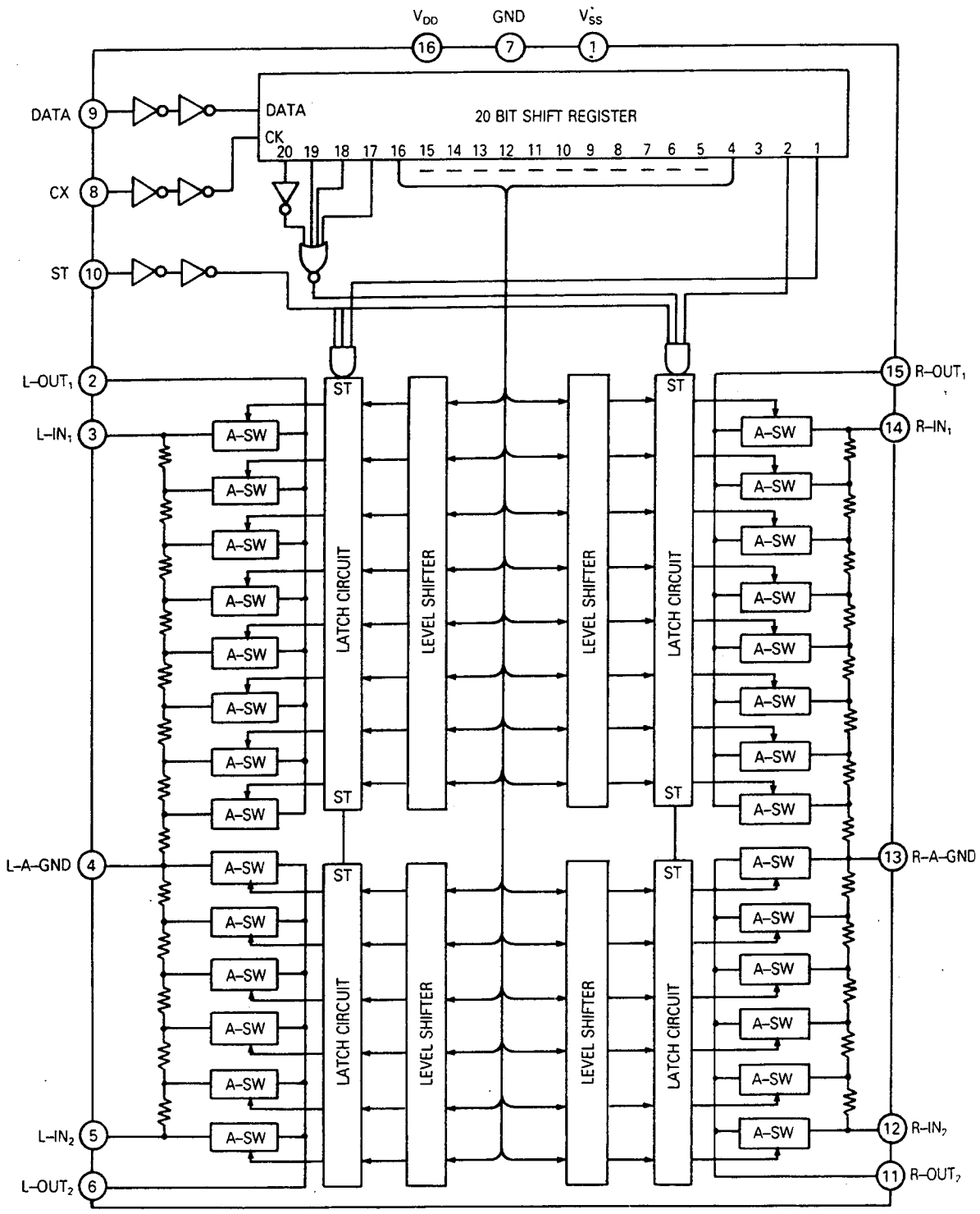

www.manualscenter.com

BA7625A : IC601

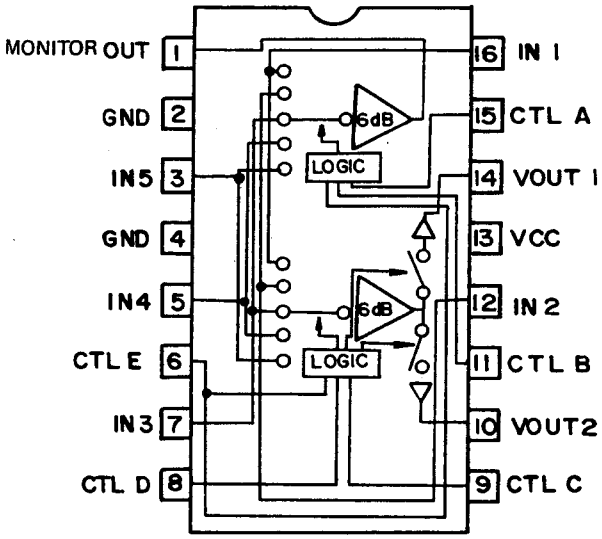

LM324 : IC108

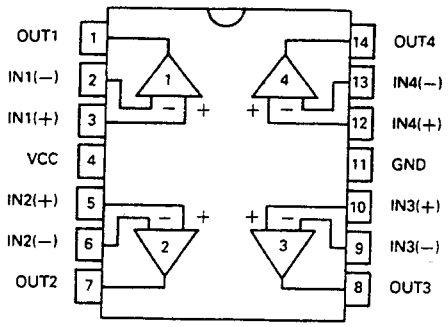

NJM2082L : IC107,IC203,IC206,IC207,IC214

Block Diagram

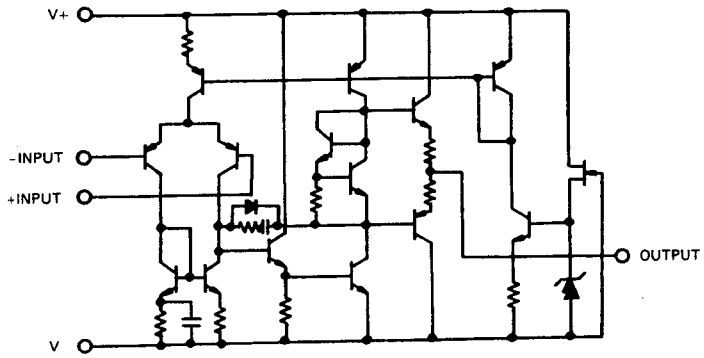

Pin Assignment

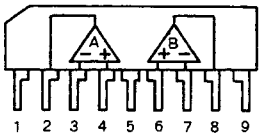

1. V I
2. A OUTPUT
3. A INPUT
4. A I INPUT
5. V
6. B I INPUT
7. B INPUT
8. B OUTPUT
9. V I

M51132L : IC106

Block Diagram

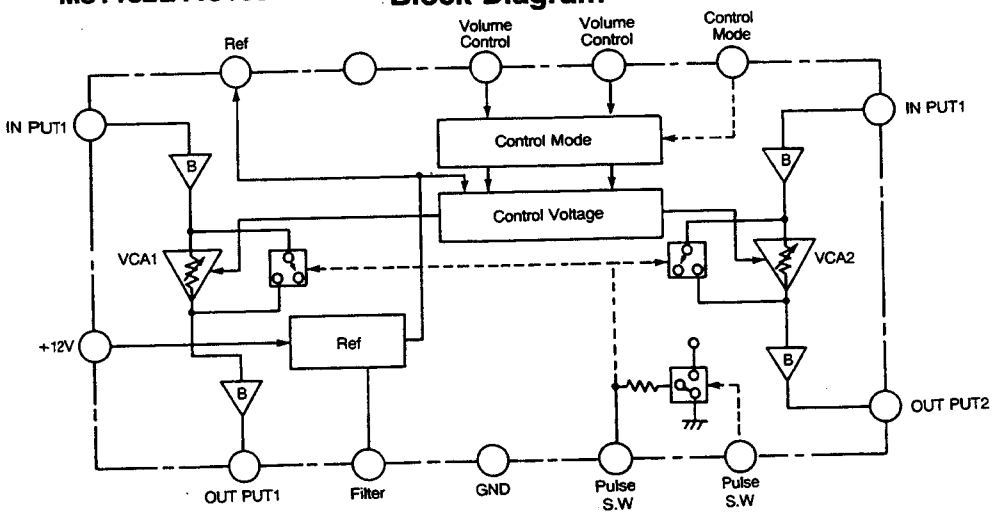

Pin Assignment

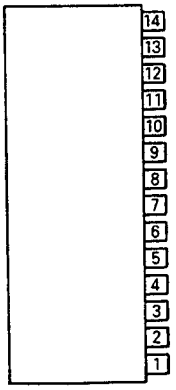

www.manualscenter.com

YM7306C : IC212 Pin Assignment

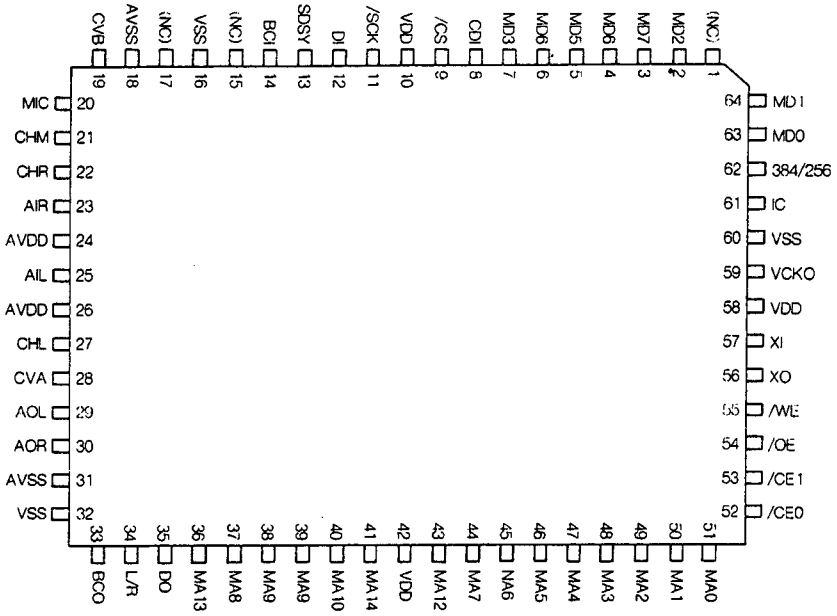

Block Diagram

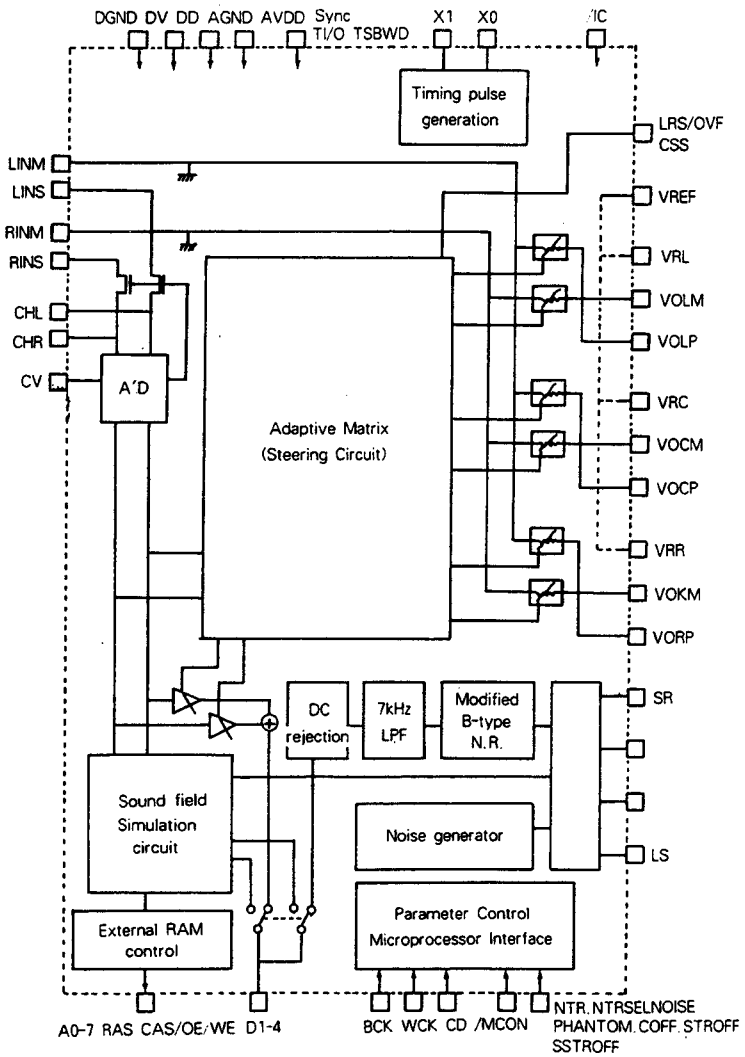

www.manualscenter.com

STK400-090 : IC401 **Block Diagram**

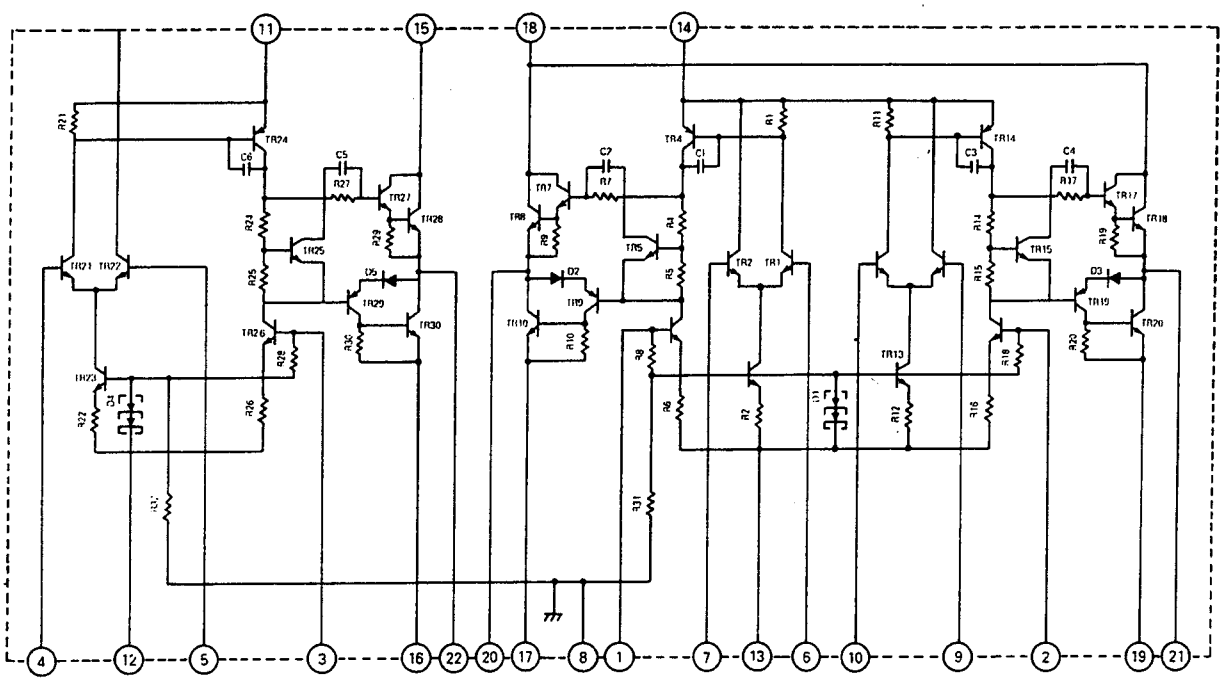

TA7291S : IC119 **Block Diagram**

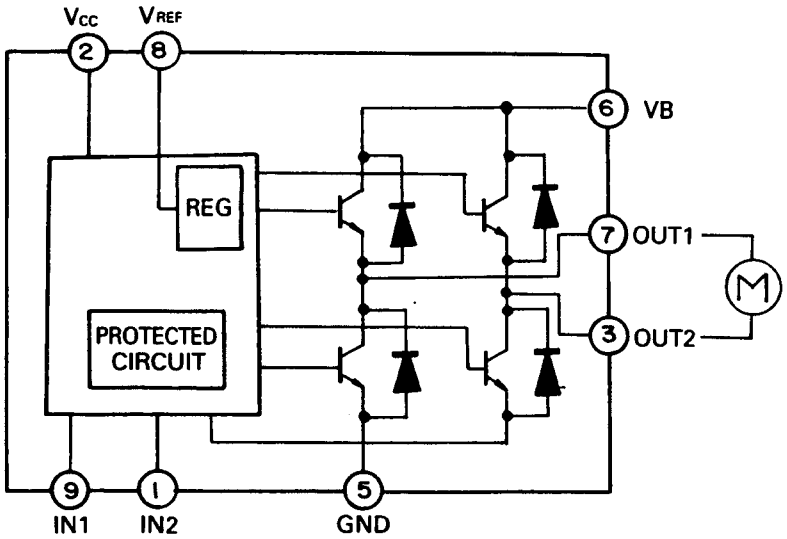

LC4966 : IC103 Block Diagram

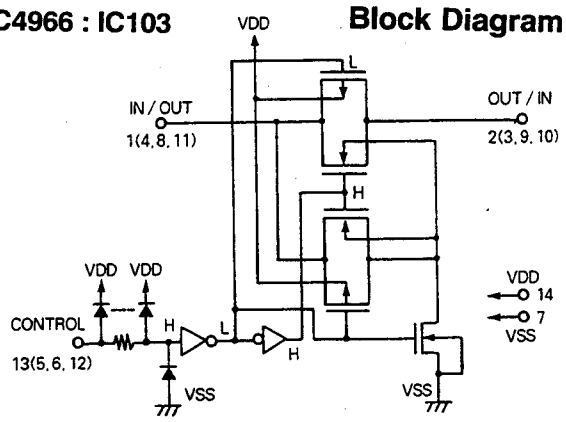

49966B : IC503, IC504 Pin Assignment

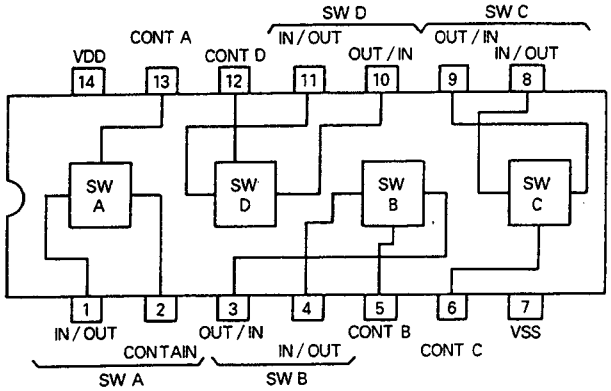

MC14094B : IC702,704 Block Diagram

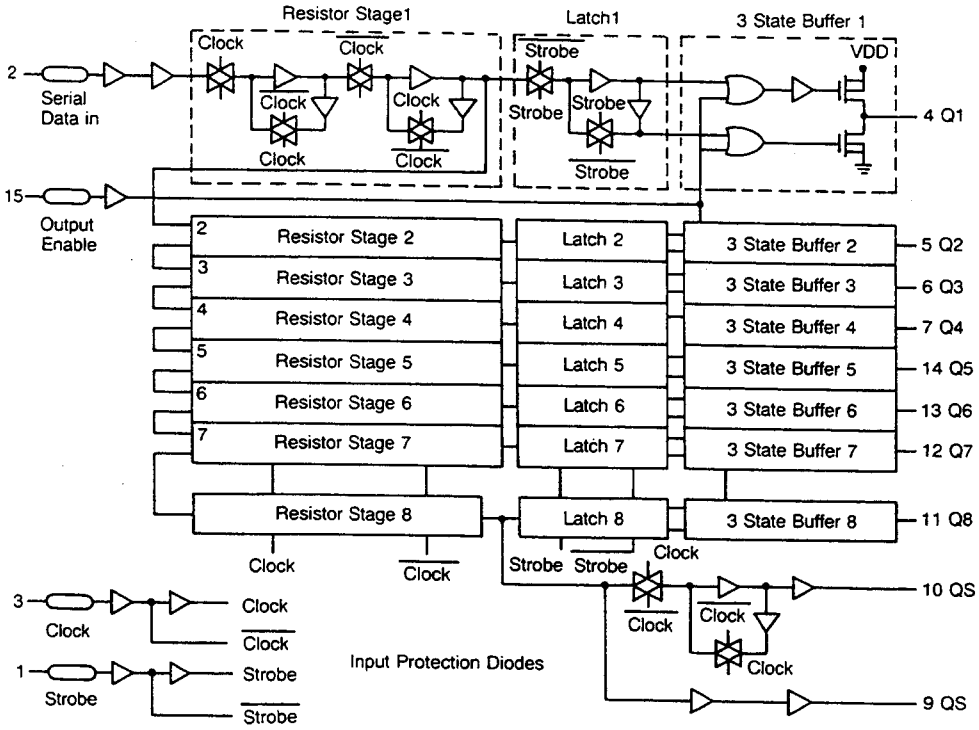

www.manualscenter.com

LM324 : IC108 **Block Diagram**

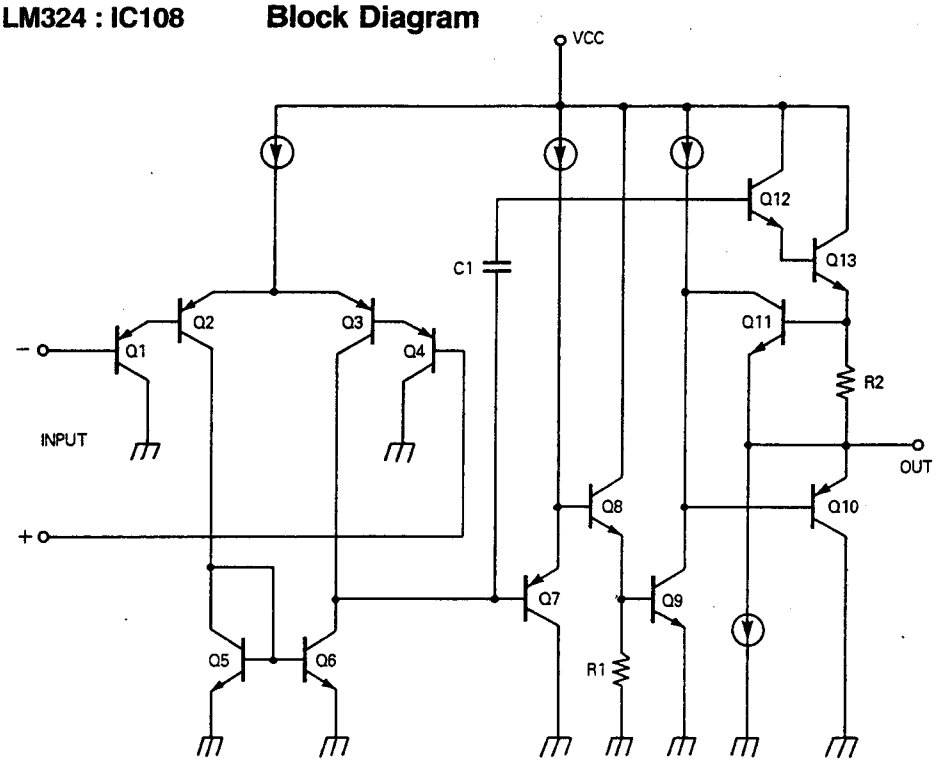

GM71C464A-80 : IC213 **Pin Assignment**

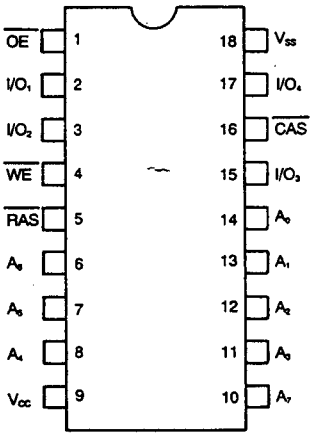

A0~A7	Address Inputs
$\overline{RAS}$	Row Address Strobe
$\overline{CAS}$	Column Address Strobe
$\overline{WE}$	Write Enable
$\overline{OE}$	Output Enable
I/O1~I/O4	Data Input, Output
V_{CC}	+5V Supply
V_{SS}	Ground

KIA4559S : IC104,105,201,202,204,208,210,215
IC301,302,303,304,305,306,307 **Pin Assignment**

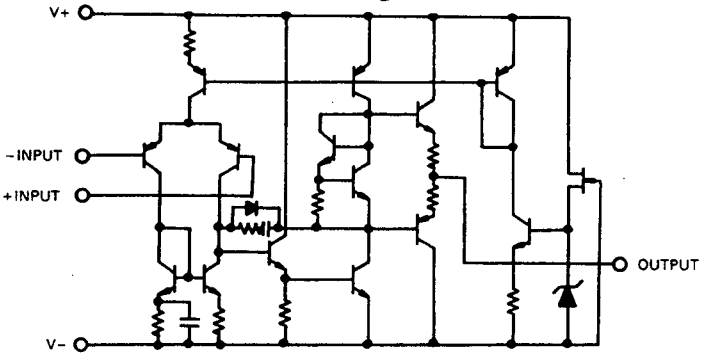

VOLTAGE CHART

IC's

unit:[V]

PART	REF	DEVICE	1	2	3	4	5	6	7	8	9	10	11	12	13	14	15	16	17	18	19	20
	IC101	TC9163	-18	0	0	0	0	0	0	0	0	0	0	0	0	0	2.6	0	0	0	0	0
			21	22	23	24	25	26	27	28												
				0	0	0	0	0	0	0	28	-										
	IC102	TC9162	-18	0	0	0	0	0	0	0	0	0	0	0	0	0	0	0	0	0	0	0
			21	22	23	24	25	26	27	28												
Main B'D	IC103	LC4966	0	0	0	0	17.6	17.6	-18	0	0	0	0	-18	-18	18						
	IC104	KKTA4559S	18	0	0	0	-18	0	0	0	18											
	IC105	KTA4559S	18	0	0	0	-18	0	0	0	18											
	IC106	M51132L	14	6.5	5.7	5.7	14	0	0	5.6	0	2.8	0	5.6	5.7	6.5						
	IC107	NJM2082S	5.6	5.6	5.6	18	4	3	2.3	18												
	IC108	LM324	5.6	5.6	5.6	18	0	2.5	-18	5.6	5.6	5.6	-18	5.6	2.5	17						
	IC201	KIA4559S	17	0	0	-17	0	0	0	18												
	IC202	KIA4559S	18	0	0	-18	0	0	0	18												
	IC203	NJM2082L	2.8	2.8	2	-18	5	5.4	5.4	5.4	18											
	IC204	KIA4559S	18	2.6	2.6	2.6	-18	5.3	5.3	5.3	18											
	IC205	TC9162	-18	0	0	0	0	0	0	0	0	0	0	0.1	0	0	2.6	2.5	0	0	0	0
			21	22	23	24	25	26	27	28												
DSP B'D			6	0	0	0	0	0	0	18												
	IC206	NJM2082L	2.8	28.	2.8	-18	2.8	2.8	2.8	17												
	IC207	NJM2082L	2.8	28.	2.8	-18	2.8	2.8	2.8	17												
	IC208	KIA4559S	17	0	0	0	-18	0	0	0	18											
	IC209	TC9176	-18	0	0	0	0	0	0	4.5	0	0	0	0	0	0	0	18				
	IC210	KIA4559S	18	0	0	0	-18	0	0	0	18											
	IC212	YM7306C	5.6	2	5.7	2.8	2.8	2.8	2.8	5.7	5.2	2.8	0	0	2.3	5.6	5.5	2.8	5.6	4.3	2.8	5.6
			21	22	23	24	25	26	27	28	29	30	31	32	33	34	35	36	37	38	39	40
			2.8	2.8	5.6	4.3	5.7	5.6				2.8	2.8	2.8	2.3	2	0.9	3.7	5.2	2.3	3.2	3.3
			41	42	43	44	45	46	47	48	49	50	51	52	53	54	55	56	57	58	58	60
			2.6	3	0	0	2.5	2.8	5.7	0	4.8	5.6	4.8	0	0	5.6	5.6	5.6	5.6	5.7	5.7	5.6
			61	62	63	64																
			5.6	5.6	5.7	5.7																
	IC213	GM71C464A-80	2.4	1.6	2.3	5.2	0.9			2.8	5.7		2.8	2.8	2.3	2	0.9	3.7	0.8	0		
	IC214	NJM2082L	5.7	5.7	5.7	-18	5.7	5.7	5.7	1.8												
	IC215	KIA4559S	18	0	0	0	-18	0	0	0	18											
V.R B'D	IC216	TA7291S	18	0	0	0	-18	0	0	0	18											
	IC301	KIA4559S	18	0	0	0	-18	0	0	0	18											
	IC302	KIA4559S	18	0	0	0	-18	0	0	0	18											
	IC303	KIA4559S	17	0	0	0	-17	0	0	0	17											
	IC304	KIA4559S	18	0	0	0	-18	0	0	0	18											
	IC305	KIA4559S	28	0	0	0	-18	0	0	0	18											
Main B'D	IC306	KIA4559S	18	0	0	0	-18	0	0	0	18											
	IC307	KIA4559S	18	0	0	0	-18	0	0	0	18											
	IC401	STK400-090	-30	-30	-40	0	0	0	0	0	0	0	41	-41	-31	30	42	-42	-32	31	-32	0
			21	22																		
			0	0																		
Video B'D	IC601	BA7625	0.6	0	2	0	2	5	2	0	0	0.6	0	4.9	5	1.8	0	2				
	IC701	CPU	-26	-22	-26	-22	5	4.7	0	0	5.3	0	0	0	0	0	0.1	0	0	0	0	4.8
			21	22	23	24	25	26	27	28	29	30	31	32	33	34	35	36	37	38	39	40
			0	0	0	0	4,2	0	4.7	0	4.8	2.1	2.3	0	0	4.8	0	0	4.8	4.8	4.8	-26
Front B'D			41	42	43	44	45	46	47	48	49	50	51	52	53	54	55	56	57	58	59	60
			-26	-26	-26	-26	-26	-26	-26	-26	-29	-12	-16	-23	-16	-12	-16	-36	-9	-19	-29	-19
			61	62	63	64																
			-22	-19	-19	4.8																
	IC703	MC14094B	0	0	4.7	0	0	0	0	0	5	0	4.9	4.9	0	5	5	5				
	IC704	MC14094B	0	4.9	4.7	0	0	0	0	0	0	0	0	4.2	0	0	5	0				

TRANSISTORS

unit:[V]

Part	Ref.No.	Device	E	C	B	Ref.No	Device	E	C	B
	Q101	2SK117	6.2	-17	5.3	Q601	A1015	1.36	0	0.6
	Q102	A114YS	18	18	0	Q602	A1015	1.36	0	0.6
	Q103	A114YS	18	-18	18	Q603	A1015	1.36	0	0.6
	Q104	C114YS	0	0	4.8	Q604	A1015	1.36	0	0.6
	Q105	C114YS	0	18	0	Q701	KTA817A	5.6	0.98	5
	Q106	C114YS	5	4.8	5	Q702	C1815	0	0	0.78
	Q107	C114YS	5	4,8	5	Q703	C1815	0	5.3	0.1
	Q108	A1015	5	0	5	Q704	C114YS	0	3.7	0
	Q109L/R	D1302	0	0	0	Q705	C114YS	0	0	4.7
	Q301	A1015	0.1	-5.4	0	Q706	C114YS	0	3.7	0
	Q302	D1302	-0.2	0	-5.6	Q707	C114YS	0	3.7	0
	Q303	D1302	-0.2	0	-5.6	Q708	C114YS	0	3.7	0
	Q304	D1302	-0.1	0	-5.6	Q709	C114YS	0	3.7	0
	Q305	D1302	-0.1	0	-5.6	Q710	C114YS	0	3.7	0
	Q306	D1302	0	0	-6.3	Q711	C114YS	0	3.7	0
	Q307	D1302	0	0	-6.3					
	Q308	D1302	0	0	-6.3					
Main/	Q309	A114YS	17.7	-16.4	17.6					
Front	Q310	A114YS	2.9	2.9	0					
	Q311	D1302	0	0	0.6					
	Q312	D1302	0	0	0.6					
	Q313	Q114YS	0	-16.7	0					
	Q314	D1302	0	0	-16.7					
	Q315	D1302	0	0	-16.7					
	Q316L/R	C114TS	0	0	0					
	Q401	D1302	0	0	-6.3					
	Q402	A1015	0	-6.3	0					
	Q403	D1302	0	0	-6.3					
	Q404	D1302	0	0	-6.3					
	Q405	A1015	0	-6.3	0					
	Q406	C1815	0	18	0					
	Q407	C1815	0	18	0					
	Q408	C1815	0	18	0					
	Q409	C1815	0	0	0.7					
	Q410	A1015	18	0	18					
	Q411	C1815	0	18	0					
	Q412	C1815	0	8.2	0					
	Q413	D1302	0	0	0					
	Q414	D1302	0	0	0					
	Q415	A114YS	8.2	0	8.2					
	Q416	C1815	0	0	0.67					
	Q501	A06	0	0	0.7					

TRANSISTORS LEAD & IDENTIFICATION

TRANSISTOR	FRONT VIEW	BOTTOM VIEW
DTC114YS DTA114YS DTC114YS	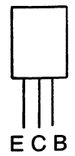	
KIA1015 KTC1815 KTP1302	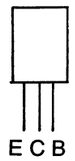	
KTA817A	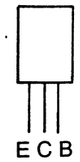	
2SK117	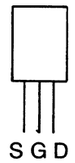	
A06	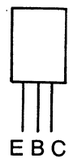	

TERMINAL NAME

B→BASE
C→COLLECTOR
E→EMITTER

S→ SOURCE
G→GATE
D→DRAIN

www.manualscenter.com

SCHEMATIC DIAGRAM I

Model No. : E 030R

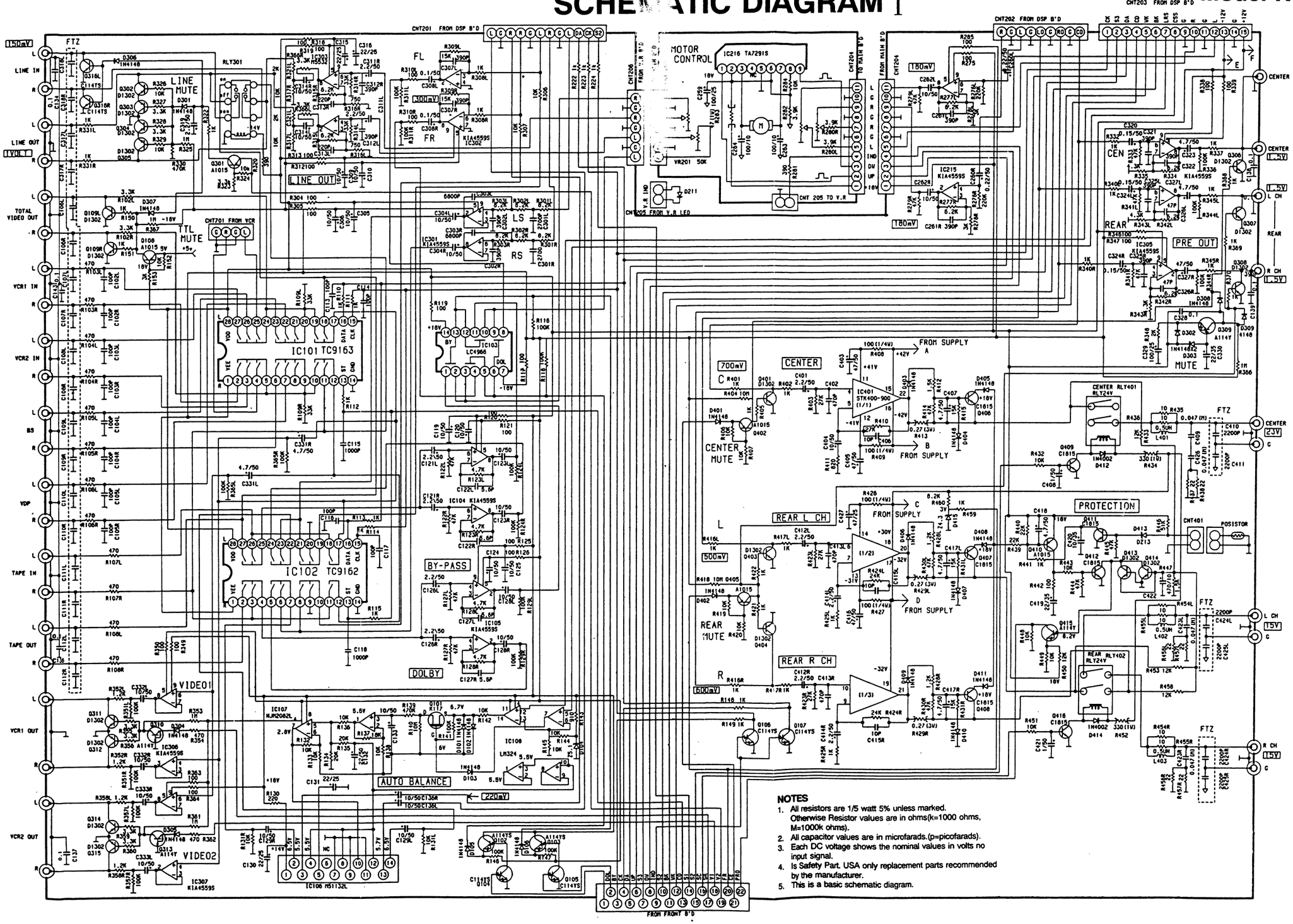

NOTES

1. All resistors are 1/5 watt 5% unless marked. Otherwise Resistor values are in ohms(k=1000 ohms, M=1000k ohms).
2. All capacitor values are in microfarads.(p=picofarads).
3. Each DC voltage shows the nominal values in volts no input signal.
4. Is Safety Part. USA only replacement parts recommended by the manufacturer.
5. This is a basic schematic diagram.

www.manualscenter.com

SCHEMATIC DIAGRAM Ⅱ

Model No. : ES-5030R

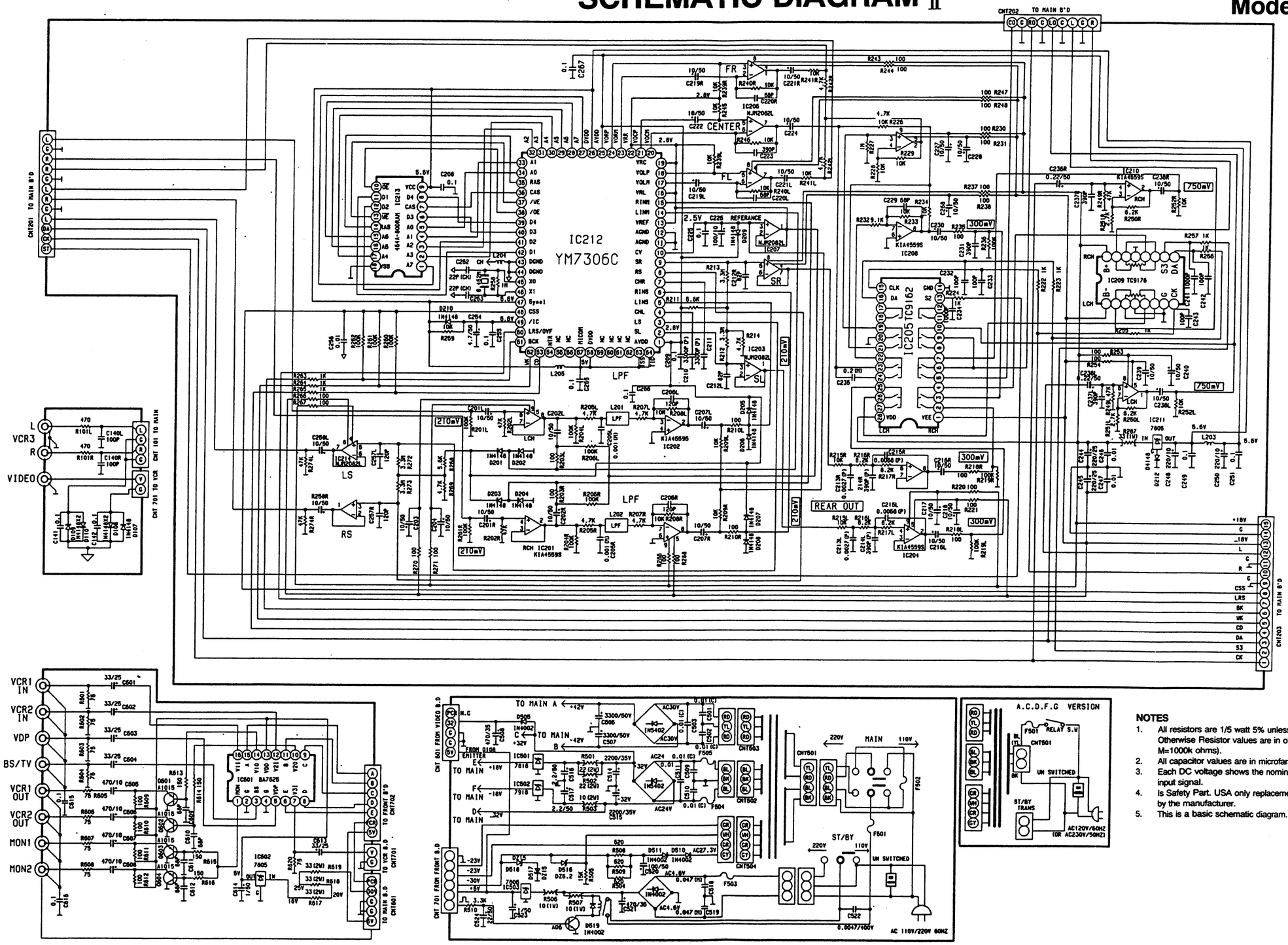

NOTES

1. All resistors are 1/5 watt 5% unless marked. Otherwise Resistor values are in ohms(k=1000 ohms, M=1000k ohms).
2. All capacitor values are in microfarads.(p=picofarads).
3. Each DC voltage shows the nominal values in volts no input signal.
4. Is Safety Part. USA only replacement parts recommended by the manufacturer.
5. This is a basic schematic diagram.

www.manualscenter.com

SCHEMATIC DIAGRAM Ⅲ

Model No. : ES-5030R

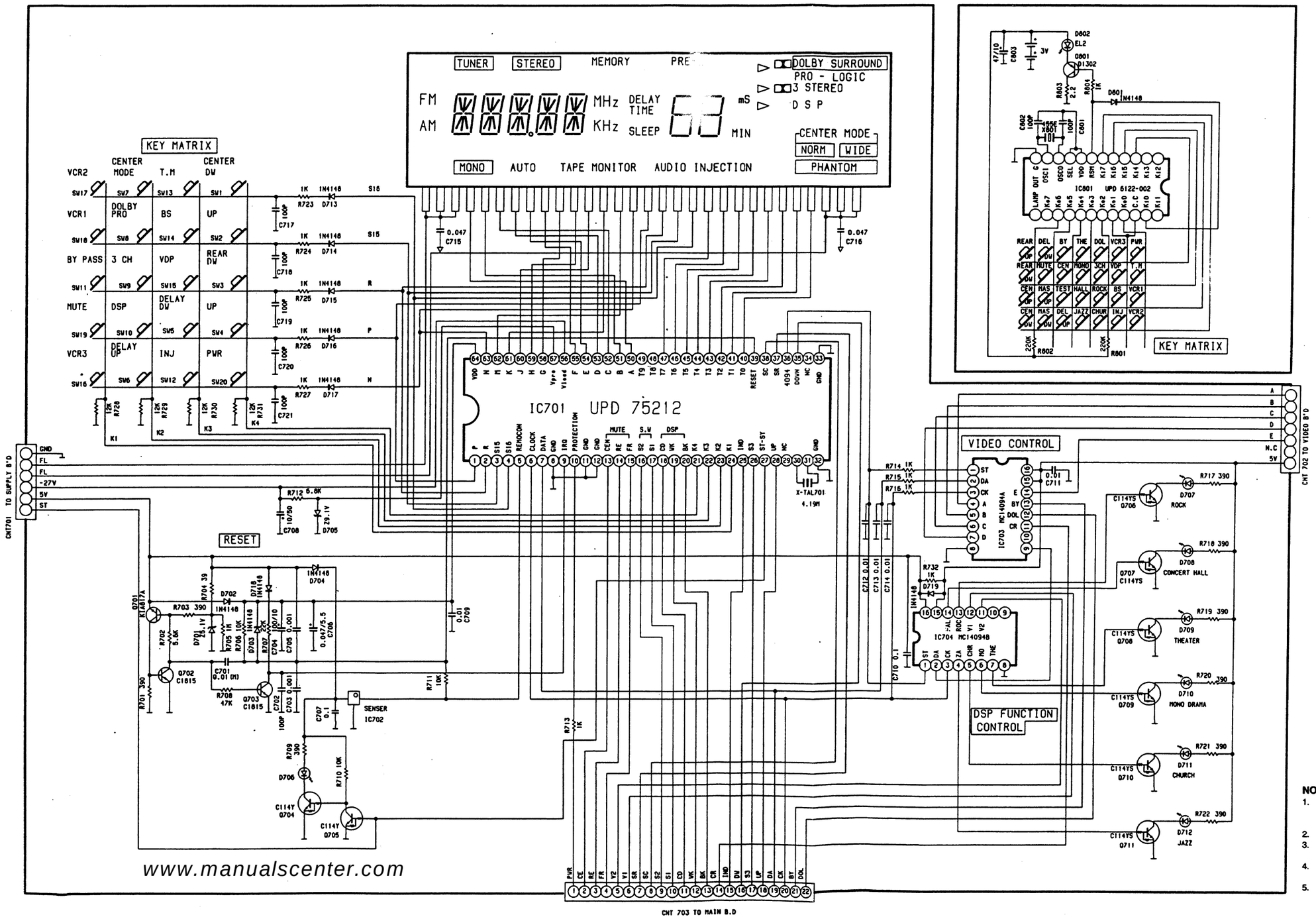

www.manualscenter.com

NOTES

1. All resistors are 1/5 watt 5% unless marked. Otherwise Resistor values are in ohms(k=1000 ohms, M=1000k ohms).
2. All capacitor values are in microfarads.(p=picofarads).
3. Each DC voltage shows the nominal values in volts no input signal.
4. Is Safety Part. USA only replacement parts recommended by the manufacturer.
5. This is a basic schematic diagram.