PION-01886

PIONEER®
The future of sound and vision.

Service Manual

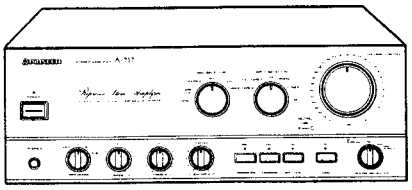

ORDER NO.
ARP1437

STEREO AMPLIFIER

A-717

MODEL A-717 COMES IN FIVE VERSIONS DISTINGUISHED AS FOLLOWS:

Type	Power requirement	Export destination
HEZ	AC220V,240V (Switchable)	West Germany
HE	AC220V,240V (Switchable)*	European continent
HB	AC220V,240V (Switchable)*	United Kingdom
KUC	AC120V only	U.S.A. and Canada
SD/G	AC110V,120V-127V,220V,240V (Switchable)	U.S. Military

*Change the primary fuse (FU1) of the power supply assembly.

•This service manual is applicable to the HEZ type.
•As to the other types, please refer to additional service manual.

CONTENTS

1.SPECIFICATIONS 2
2.PANEL FACILITIES 3
3.EXPLODED VIEWS AND PARTS LIST 5
4.PACKING 9
5.SCHEMATIC DIAGRAM 10
6.P.C. BOARDS CONNECTION DIAGRAM 13
7.ELECTRICAL PARTS LIST 21

PIONEER ELECTRONIC CORPORATION 4-1, Meguro 1-Chome, Meguro-ku, Tokyo 153, Japan
PIONEER ELECTRONICS SERVICE INC. P.O. Box 1760, Long Beach, California 90801 U.S.A.
PIONEER ELECTRONICS OF CANADA, INC. 505 Cochrane Drive, Markham, Ontario L3R 8E3 Canada
PIONEER ELECTRONIC [EUROPE] N.V. Keetberglaan 1, 2740 Beveren, Belgium
PIONEER ELECTRONICS AUSTRALIA PTY. LTD. 178-184 Boundary Road, Braeside, Victoria 3195, Australia TEL: [03] 580-9911

www.manualscenter.com

LINE VOLTAGE SELECTION

1.Disconnect the AC power cord
2.Remove the Bonnet case
3.Change the position of the FU1 on the power supply assembly as follows.

Voltage	Fuse FU1 Position
220V	①
240V	②

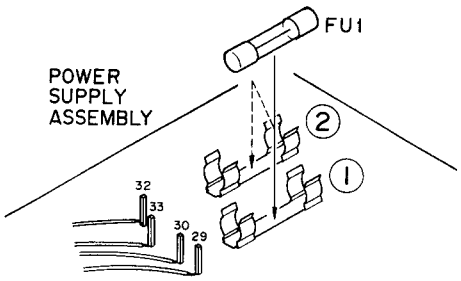

1. SPECIFICATIONS

Dauerleistung (beide Kanäle)
20 Hz bis 20 kHz, 0,003% Klirr, an 8 Ohm ... 95W + 95W
20 Hz bis 20 kHz, 0,005% Klirr, an 4 Ohm ..... 140W + 140W
Dauerleistung nach DIN (beide Kanäle)
1 kHz, 1% Klirr, an 8 Ohm ..... 100W + 100W
1 kHz, 1% Klirr, an 4 Ohm ..... 150W + 150W
Leistungsbandbreite
Dämpfungsfaktor
(1 kHz/20 Hz bis 20 kHz) an 8 Ohm 200/70
Dynamikleistung (mit EIA-Dynamik-Testsignal)
8 Ohm ..... 120W + 120W
4 Ohm ..... 180W + 180W
2 Ohm ..... 250W + 250W
Klirrfaktor (gemessen mit Tonspektrumanalysator)
20 Hz bis 20 kHz, 95W, an 8 Ohm 0,003%
Eingangsempfindlichkeit/-impedanz
PHONO (MM) ..... 2,5 mV/50 kOhm
PHONO (MC) ..... 0,2 mV/100 Ohm
CD, TUNER, LINE, TAPE ..... 150 mV/50 kOhm
PHONO-Übersteuerungsgrenze
1 kHz, 0,008% Klirr (MM/MC) ..... 200 mV/19 mV
Ausgangspegel/-impedanz
TAPE REC, ADAPTOR OUTPUT ..... 150 mV/2,2 kOhm
Frequenzgang
PHONO (MM), 20 Hz bis 20 kHz ..... ±0,2 dB
PHONO (MC), 20 Hz bis 20 kHz ..... ±0,3 dB
CD, TUNER, LINE, TAPE, 1 Hz bis 150 kHz ..... $^{+0}_{-3}$ dB

Klangregler
BASS ..... ±8 dB (100 Hz)
TREBLE ..... ±8 dB (10 kHz)
Loudness (Lautstärkeregler: −40 dB) ... +5 dB (100 Hz)/+3 dB (10 kHz)
Subsonicfilter ..... 17 Hz (12 dB/Okt.)
Fremdspannungsabstand (IHF kurzgeschlossen, A-Netzwerk)
PHONO (MM: 5 mV, MC: 0,5 mV Eingang) ..... 95 dB/77 dB
CD, TUNER, LINE, TAPE ..... 108 dB
Fremdspannungsabstand (DIN, Dauerleistung/50 mW)
PHONO (MM) ..... 74 dB/65 dB
CD, TUNER, LINE, TAPE ..... 92 dB/66 dB

Stromversorgung/Allgemeines

Netzanschluß ..... 220V ~, 50/60 Hz
Leistungsaufnahme 820W
Abmessungen (B × T × H) ..... 420 × 435 × 162 mm
Gewicht ..... 19 kg

Zubehör

Bedienungsanleitung 1

- Änderungen der technischen Daten und des Designs zum Zwecke der Verbesserung vorbehalten.

2. FRONT PANEL FACILITIES

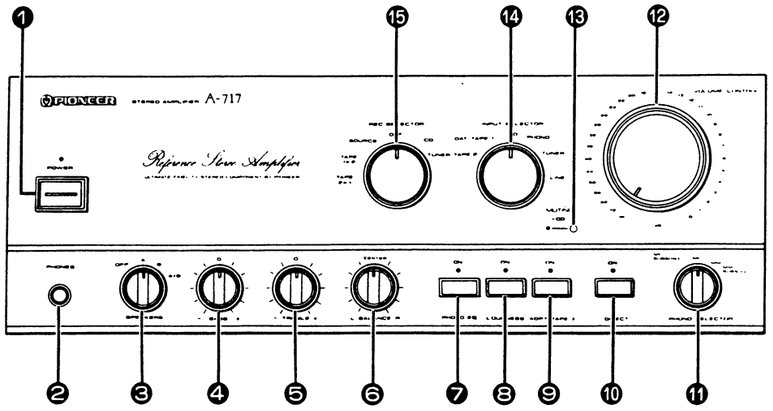

1 POWER switch/indicator
Press to turn power to the unit ON and OFF.

2 PHONES jack
When using headphones, insert the plug into this jack.

3 SPEAKERS selector switch
Use this switch to listen to the speaker systems connected to the SPEAKERS terminals.

OFF:
Released position: No sound is heard from the speaker system. Set to this position when listening with headphones.

A:
For reproduction of sound with the speaker systems connected to the SPEAKERS A terminals.

B:
For reproduction of sound with the speaker systems connected to the SPEAKERS B terminals.

A + B:
For reproduction of sound with the speaker systems connected to SPEAKERS A and B terminals.

4 BASS tone control
Use to adjust the low-frequency tone. The center position is the flat (normal) position. When turned to the right, low-frequency tones are emphasized; when turned to the left, low-frequency tones are de-emphasized.

NOTE:
This function does not operate when the DIRECT switch is in the ON position.

5 TREBLE tone control
Use to adjust the high-frequency tone.
The center position is the flat (normal) position. When turned to the right, high-frequency tones are emphasized; when turned to the left, high-frequency tones are de-emphasized.

NOTE:
This function does not operate when the DIRECT switch is in the ON position.

6 BALANCE control
Should normally be left in the center position. Adjust balance if the sound is louder from one of the speakers. If the right side is louder, turn toward the LEFT position and if the left side is louder turn toward the RIGHT position.

NOTE:
This function does not operate when the DIRECT switch is in the ON position.

7 PHONO EQ switch/indicator
When not using a phono input, turn the phono equalizer power circuit off in order to prevent it from collecting noise during playback of other sources.

ON:
The indicator lights: Always set to this position when using a phono input. Immediately after turning ON, audio signal will be muted for several seconds until circuit operation becomes stable.

OFF:
The indicator goes off: Set to this position when not using a phono input.

8 LOUDNESS switch/indicator
Use when listening at low value levels.

ON:
The indicator lights: Boosts low and high frequencies to give added punch to playback even at low volume.

OFF:
The indicator goes off: Should normally be left in this position.

NOTE:
This switch does not operate when the DIRECT switch is in the ON position.

9 ADPT 1/TAPE 3 switch/indicator
Use this switch to listen to tape playback, or to listen to the sounds being recorded during tape recording.

ON:
The indicator lights: Press when listening to the playback sound of the tape deck or the adaptor connected to the ADPT 1/TAPE 3 PLAY terminals, or to monitor the sound being recorded on the tape deck connected to the ADPT 1/TAPE 3 REC terminals.

OFF:
The indicator goes off: Normally leave the switch in this position.

NOTE:
When the DIRECT switch is set to ON, this function does not operate and no signal is output at the ADPT 1/TAPE 3 REC terminals.

10 DIRECT switch/indicator
Use this switch/indicator when you do not wish to pass the output from input terminal equipment through the various frequency adjusting circuits and adaptor terminals (ADPT 1/TAPE 3, ADPT 2, BASS, TREBLE, BALANCE, LOUDNESS).

ON:
When the switch is in this position, the indicator lights and the signals input from the input terminals are reproduced without passing through the various frequency adjusting circuits. This results in flat, pure sound which is a more faithful reproduction of the input source

OFF:
When the switch is in this position, the indicator goes out and the signal passes through the various frequency adjusting circuits.

11 PHONO SELECTOR switch
Set in accordance with the type of cartridge used in your record turntable.

MM:
Set to this position when using a moving magnet cartridge, or a moving coil cartridge with high output of 1 mV or more.

MC:
Set to this position when using a moving coil catridge.

MM SUBSONIC/MC SUBSONIC:
Subsonic filter for moving coil or moving magnet cartridges to cut ultralow frequency noise less than 7 Hz generated when playing a warped record.
When using a high-output moving coil cartridge, set this switch to MM or MM SUBSONIC.

12 VOLUME CONTROL
Use to adjust volume level

NOTE:
This unit is equipped with a circuit that attenuates the effect of tone and loudness controls as volume is turned up.

13 MUTING switch/indicator
Use to temporarily cut sound volume.

ON:
The indicator lights. The sound volume will be cut off.

OFF:
The indicator goes off: The sound will return to its previous volume.

14 INPUT SELECTOR switch
Use to select playback source.

LINE:
Set to this position when listening to the programs from a component connected to the LINE terminals.

TUNER:
Set to this position when listening to AM or FM broadcasts with a tuner.

PHONO:
Set to this position when listening to record playback on a turntable.

CD:
Set to this position when listening to a compact disc playback with a CD player.

DAT/TAPE 1:
For playback with a tape deck or digital audio tape deck connected to the DAT/TAPE 1 terminals

TAPE 2:
For playback with a tape deck connected to the TAPE 2 terminals.

15 REC SELECTOR switch
Switch to select recording signal. When set at other than SOURCE or OFF position, signals of other equipment can be recorded during playback on the equipment selected by INPUT SELECTOR switch.

TUNER:
To record the equipment of TUNER terminals.

CD:
To record the equipment of CD terminals.

OFF:
In this position, nothing from the REC terminals of DAT/TAPE 1 and TAPE 2 will be output. Select it when not recording, the tape deck will be disconnected, improving sound quality

SOURCE:
To record the equipment selected by INPUT SELECTOR switch.

TAPE:
1 ► 2 — To record (copy) from the tape deck of DAT/TAPE 1 terminals, over to the tape deck of TAPE 2 terminals
2 ► 1 — To record (copy) from the tape deck of TAPE 2 terminals, over to the tape deck of DAT/TAPE 1 terminals.

NOTE:
The REC SELECTOR switch has no effect on the ADPT 1/TAPE 3 terminals recording output.

www.manualscenter.com

PION-01886 / DRUCK 1

3. EXPLODED VIEWS AND PARTS LIST

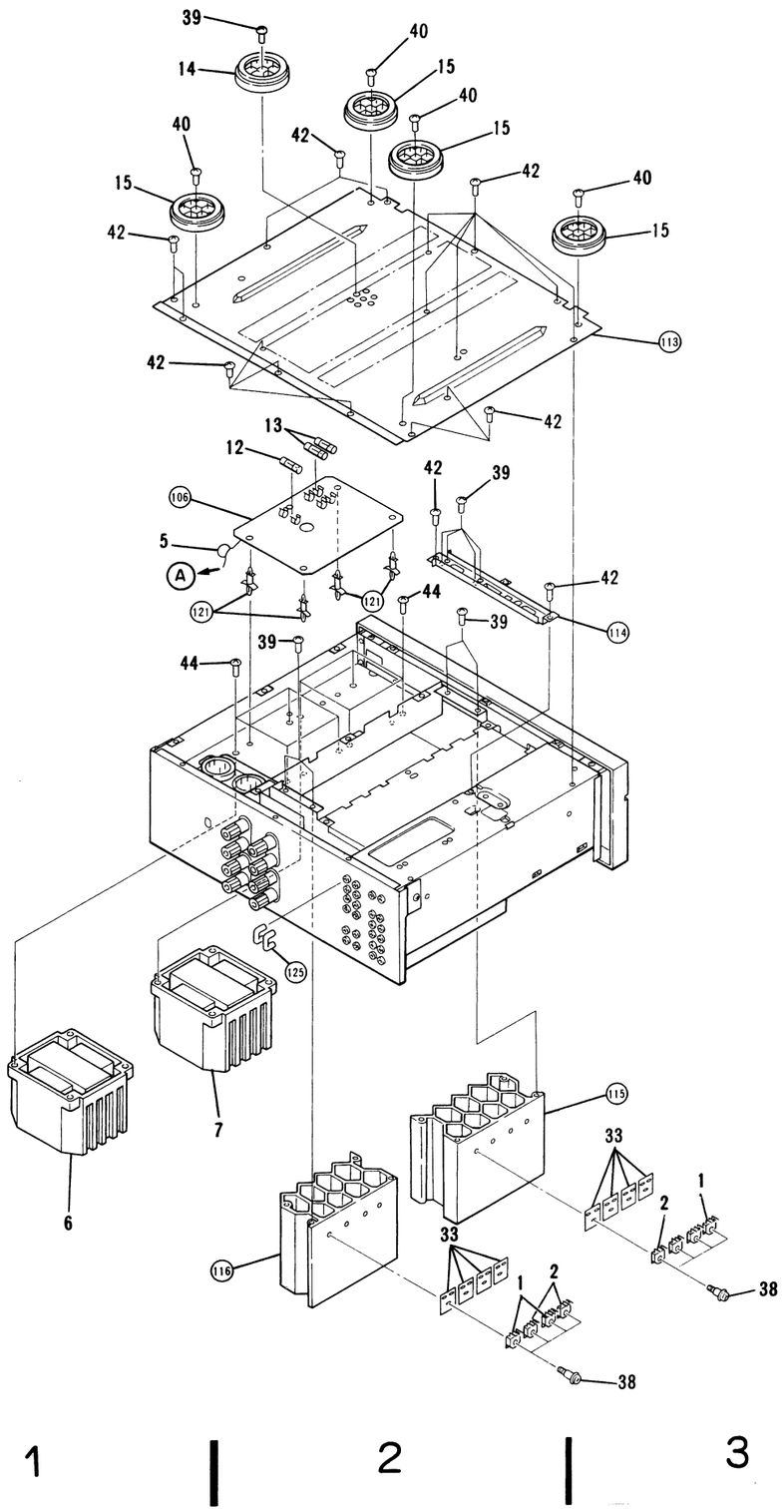

NOTES:

- *Parts without part number cannot be supplied.*
- *The ⚠ mark found on some component parts indicates the importance of the safety factor of the part. Therefore, when replacing, be sure to use parts of identical designation.*
- *For your parts Stock Control, the fast moving items are indicated with the marks ★★ and ★.*
  ★★ GENERALLY MOVES FASTER THAN ★
  This classification shall be adjusted by each distributor because it depends on model number, temperature, humidity, etc.
- *Parts marked by "◉" are not always kept in stock. Their delivery time may be longer than usual or they may be unavailable.*

Parts List of Exterior

Mark	No.	Parts No.	Description
⚠★★	1	2SA1265N	Transistor(Q3,Q4,Q5,Q6)
⚠★★	2	2SC3182N	Transistor(Q1,Q2,Q7,Q8)
⚠	3	ACH1045	Electrolytic capacitor (C3 22,000μF/63V×2)
	4	CCDSL101J500	Ceramic capacitor(C4,C5)
	5	CKDYB472K50	Ceramic capacitor(C1,C2,C6)
⚠★	6	ATS1087	Power transformer (AC220V/240V,T1)
⚠★	7	ATS1088	Power transformer (AC220V/240V,T2)
⚠★★	8	ASG−553	Push switch(POWER,S1)
★★	9	ASU1003	Remote slide rotary switch (REC SELECTOR,S3)
★★	10	ASU1005	Remote slide rotary switch (INPUT SELECTOR,S2)
★★	11	ASU1007	Remote slide rotary switch (PHONO SELECTOR,S4)
⚠★★	12	AEK−400	Fuse(FU1 T4A/250V)
⚠★★	13	AEK−407	Fuse(FU2 FU3 T400mA/250V)
	14	AMR1158	Leg assembly
	15	AMR1159	Leg assembly
	16	ANK1029	Shield plate
	17	ANK1031	Volume holder
	18	AAB1036	Rotary knob L(VOLUME)
	19	AAB1038	Rotary knob M (REC,INPUT SELECTOR)
	20	AAB1040	Rotary knob S (PHONO SELECTOR, BALANCE,TREBLE,BASS, SPEAKERS B)
	21	AAD1016	Tact Knob B
	22	AAD1168	Power knob (POWER)
	23	AAD1162	Push knob (LOUDNESS, ADPT1/TAPE3)
	24	AAD1164	Direct knob (DIRECT)
	25	AAM−030	Name plate
	26	AMB1200	Panel base
	27	AMR1160	LED Lens
	28	ANB1105	Front panel
	29	ANE1075	Bonnet case
	30	ABE1009	Washer
	31	ABH1033	Coil spring A
	32	ABH1034	Coil spring B
	33	AEC−818	Mica sheet
	34	AEC−882	Strain relief
	35	AMR1161	Joint arm
	36	AMR1178	Joint
	37	ANL1007	Long shaft assembly
	38	ABA−297	Screw
	39	ABA−298	Screw
	40	ABA1004	Screw
	41	ABA1006	Screw
	42	ABA1009	Screw
	43	ABA1011	Screw
	44	ABA1034	Screw
	45	ABA1035	Screw
	46	ABN−065	Shaft nut
	47	.....	
	48	ADG1019	AC Power cord
	49	BBZ40P080FZK	Screw
	50	NK90FUC	Nut
	51	VMZ30P060FCU	Screw
	52	AWZ1472	Tone AMP assembly
	53	AWZ1480	Power AMP assembly
	54	AWZ1853	PHONO AMP assembly
	101		Input selector assembly
	102		REC Out assembly
	103		Speaker switch assembly
	104		Main volume assembly
	105		Speaker terminal assembly
	106		Power supply assembly
	107		Headphone assembly
	108		Terminal (GND)
	109		Trans frame
	110		Right frame
	111		Rear panel
	112		Panel stay
	113		Bottom plate
	114		Heat sink holder
	115		Heat sink
	116		Heat sink
	117		Spacer
	118		Cushion rubber
	119		Binder
	120		Binder
	121		Boss
	122		Pin gromet
	123		Spacer
	124		Binder
	125		Jumper plug
	126		Cord (GND)

Exterior

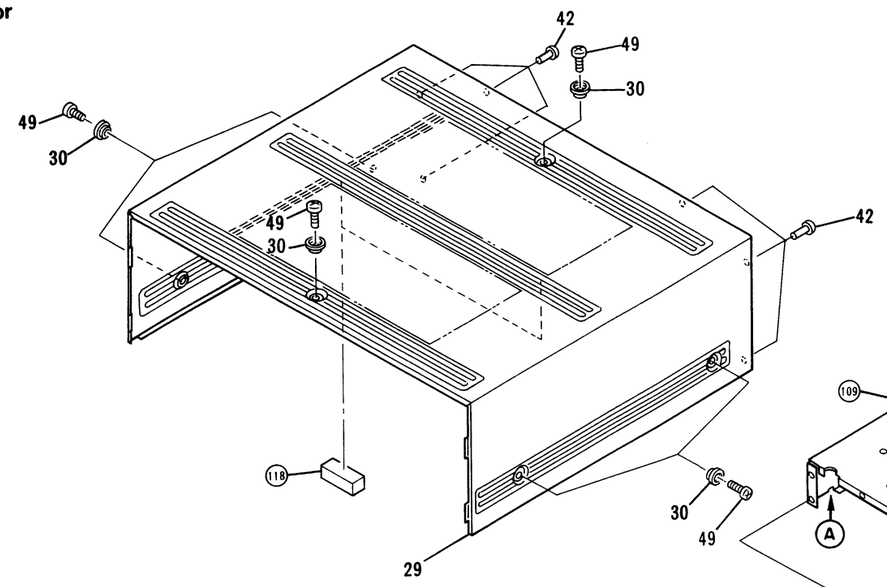

Before any repair of the SP terminal assembly, remove the rear panel.
(For the removal of the rear panel, the bottom plate must be detached, and remove the capacitor(No.4) from the screw(No.45) as shown in exploded views.

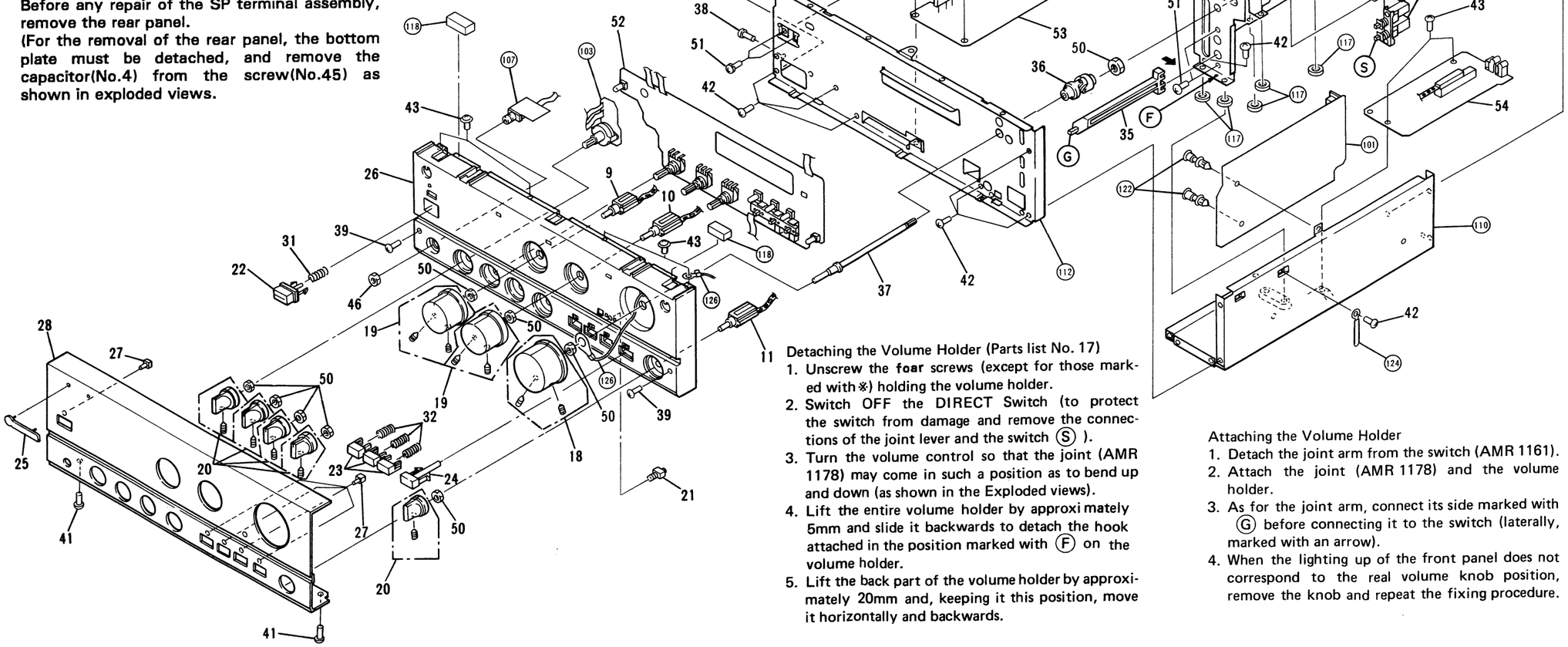

Detaching the Volume Holder (Parts list No. 17)

1. Unscrew the **four** screws (except for those marked with ※) holding the volume holder.
2. Switch OFF the DIRECT Switch (to protect the switch from damage and remove the connections of the joint lever and the switch (S)).
3. Turn the volume control so that the joint (AMR 1178) may come in such a position as to bend up and down (as shown in the Exploded views).
4. Lift the entire volume holder by approxi mately 5mm and slide it backwards to detach the hook attached in the position marked with (F) on the volume holder.
5. Lift the back part of the volume holder by approximately 20mm and, keeping it this position, move it horizontally and backwards.

Attaching the Volume Holder

1. Detach the joint arm from the switch (AMR 1161).
2. Attach the joint (AMR 1178) and the volume holder.
3. As for the joint arm, connect its side marked with (G) before connecting it to the switch (laterally, marked with an arrow).
4. When the lighting up of the front panel does not correspond to the real volume knob position, remove the knob and repeat the fixing procedure.

www.manualscenter.com

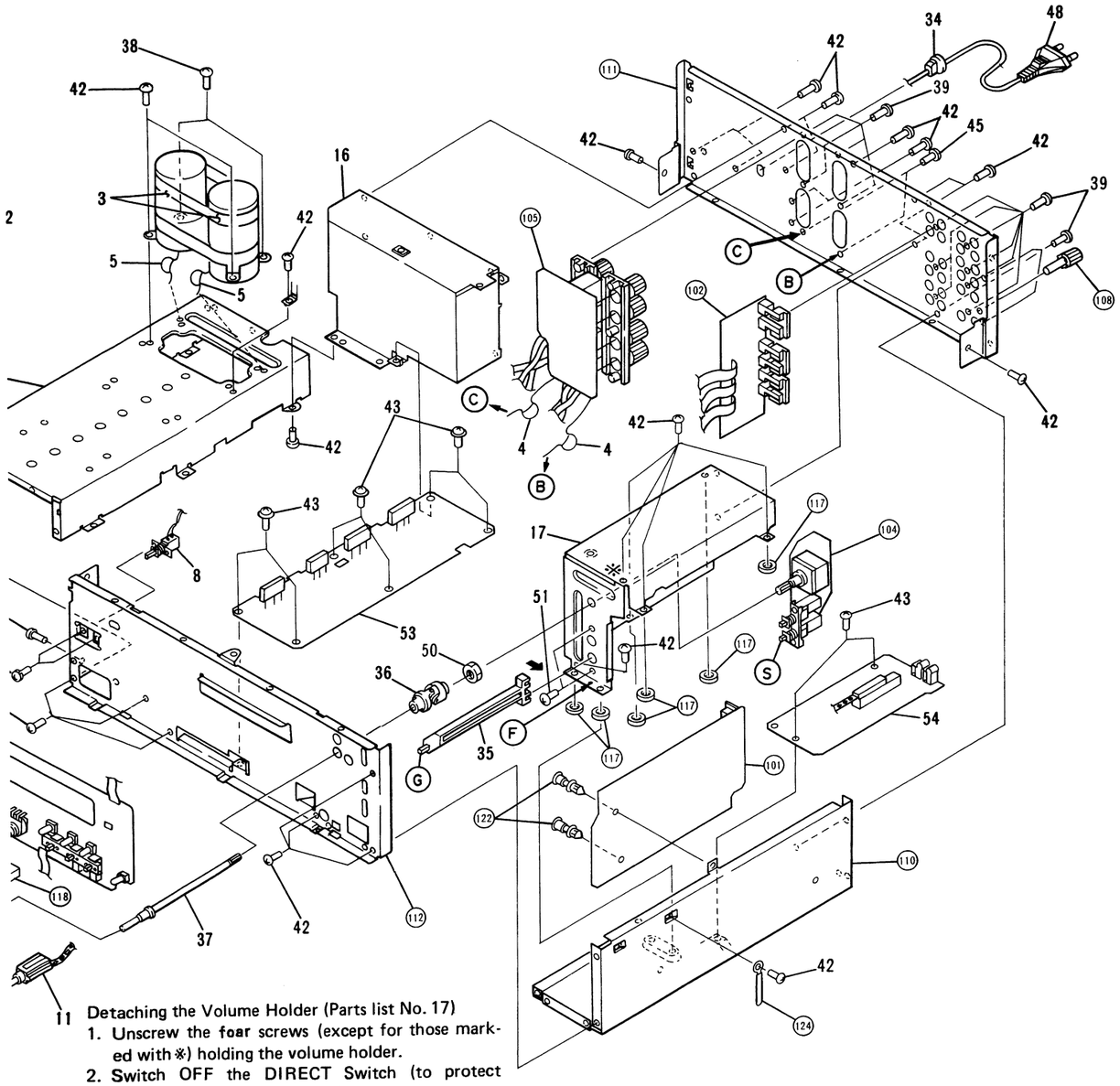

Detaching the Volume Holder (Parts list No. 17)

1. Unscrew the four screws (except for those marked with ※) holding the volume holder.
2. Switch OFF the DIRECT Switch (to protect the switch from damage and remove the connections of the joint lever and the switch (S)).
3. Turn the volume control so that the joint (AMR 1178) may come in such a position as to bend up and down (as shown in the Exploded views).
4. Lift the entire volume holder by approxi mately 5mm and slide it backwards to detach the hook attached in the position marked with (F) on the volume holder.
5. Lift the back part of the volume holder by approximately 20mm and, keeping it this position, move it horizontally and backwards.

Attaching the Volume Holder

1. Detach the joint arm from the switch (AMR 1161).
2. Attach the joint (AMR 1178) and the volume holder.
3. As for the joint arm, connect its side marked with (G) before connecting it to the switch (laterally, marked with an arrow).
4. When the lighting up of the front panel does not correspond to the real volume knob position, remove the knob and repeat the fixing procedure.

4. PACKING

PARTS LIST OF PACKING

Mark	No.	Parts No.	Description
	1	AHA1070	Front rear pad
	2	AHD1240	Packing case
	3	ARC1047	Operating instruction (German)
	101		Packing sheet

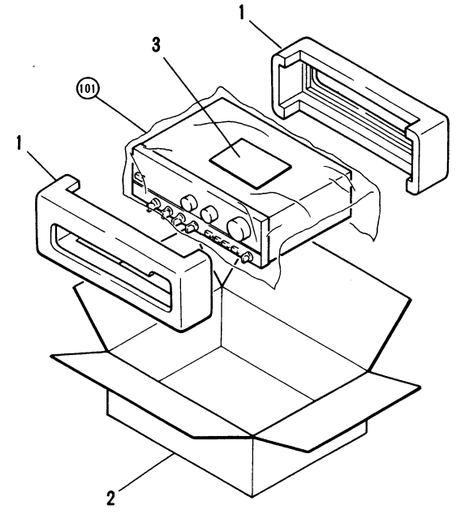

External Appearance of Transistors and ICs

2SC1845
2SA992

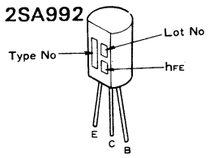

2SC2603
2SA1115

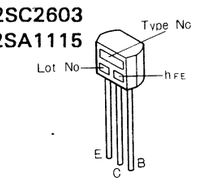

2SC2458
2SA1048

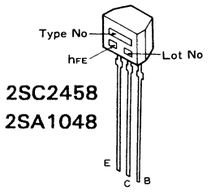

2SA1145
2SC2705

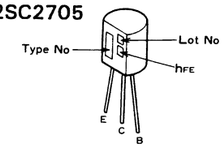

M5F78M24L

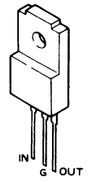

M5F79M24L

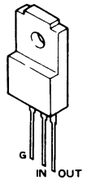

2SK369

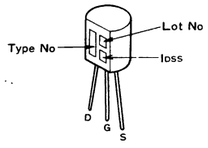

2SK389

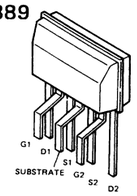

2SC2235

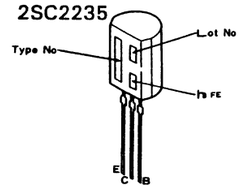

PA0016

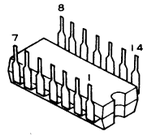

M5220P

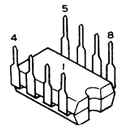

2SC2238
2SA968

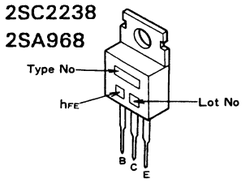

2SA1265N
2SC3182N

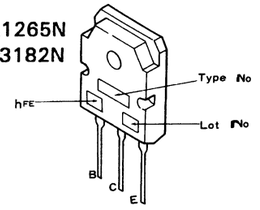

2SC3327

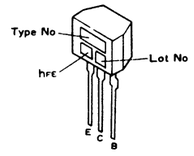

M74LS74AP

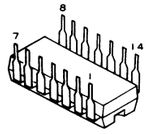

5. SCHEMATIC DIAGRAM

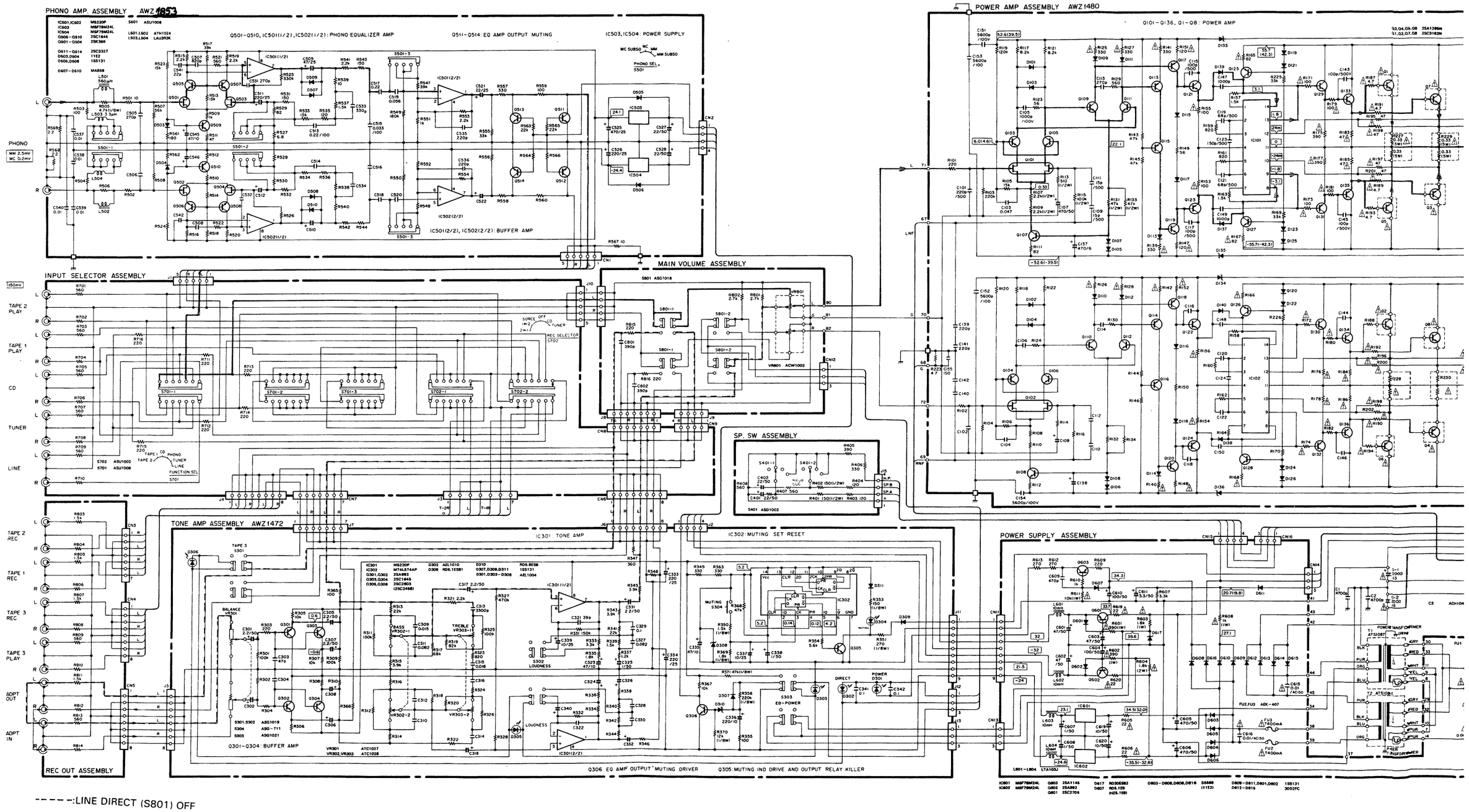

www.manualscenter.com

NOTE:
The indicated semiconductors are representative ones only. Other alternative semiconductors may be used and are listed in the parts list.

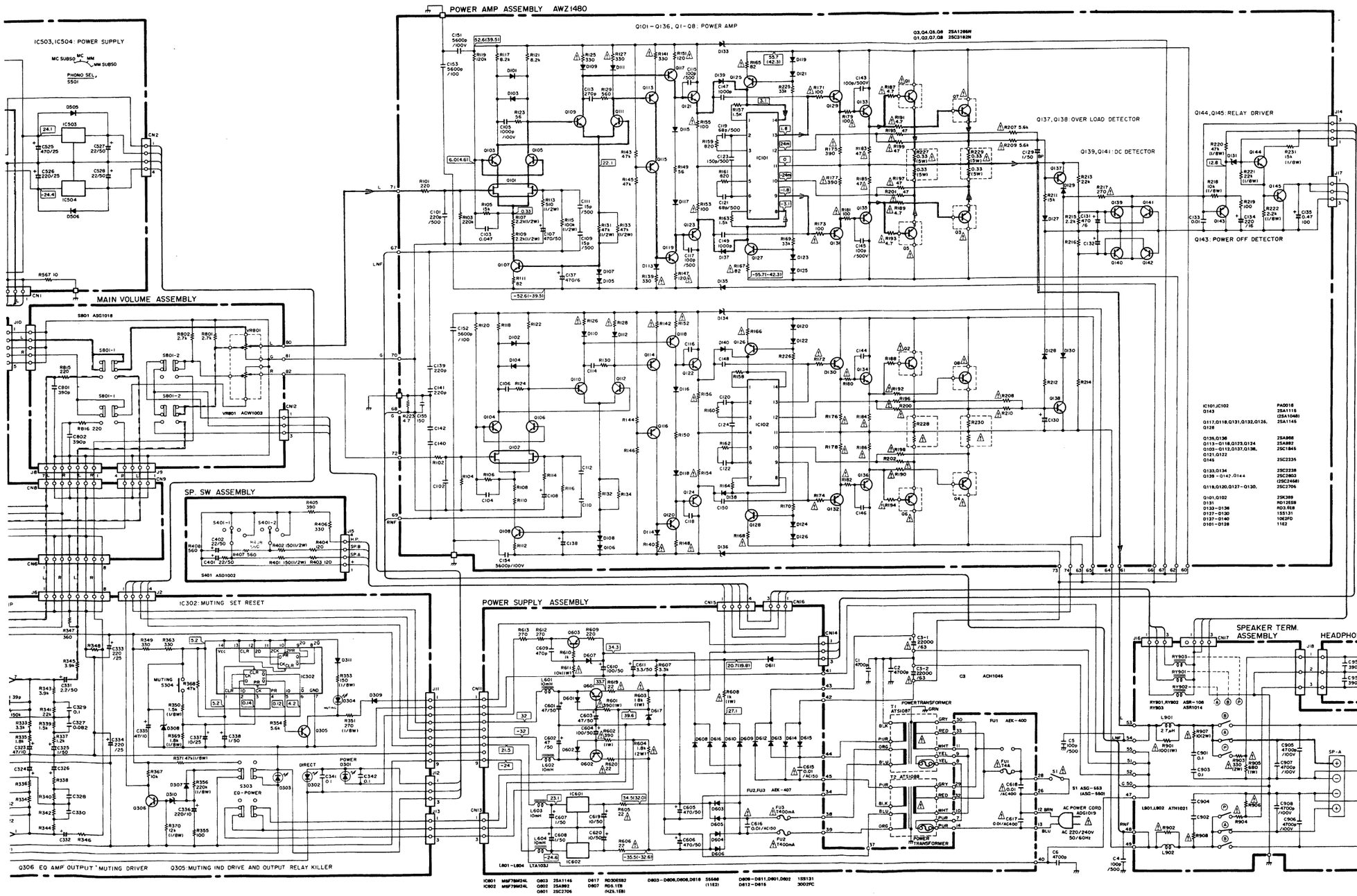

1 RESISTORS:
Indicated in Ω, ¼W, ½W, ±5% tolerance unless otherwise noted k : kΩ, M : MΩ, (F) : ±1%, (G) : ±2%, (K) : ±10% (M); ±20% tolerance

2 CAPACITORS:
Indicated in capacity (μF)/voltage (V) unless otherwise noted p : pF
Indication without voltage is 50V except electrolytic capacitor

3 VOLTAGE, CURRENT:
: Signal voltage at (130W +130W 4Ω) out (1KHz)
: DC voltage (V) at no input signal
Value in ( ) is DC voltage at rated power
mA : DC current at no input signal

4 OTHERS:
: Signal route
The △ mark found on some component parts indicates the importance of the safety factor of the part. Therefore, when replacing, be sure to use parts of identical designation

5. SWITCHES

TONE AMP ASSEMBLY
S301: TAPE 3 (ON–OFF)
S302: LOUDNESS (ON–OFF)
S303: EQ. POWER (ON–OFF)
S304: MUTING (ON–OFF)

SPEAKER SWITCH ASSEMBLY
S401: SPEAKERS A, B (OFF–A–B–A+B)

PHONO AMP ASSEMBLY
S501: PHONO SEL. (MC/MM–MC–MM–MM/MM)

INPUT SELECTOR ASSEMBLY
S701: FUNCTION SEL. (TA2–TA1–CD–PHONO–TUNER–LINE)
S702: REC. SEL. (2←1–1←2–SOURCE–OFF–CD–TUNER)

MAIN VOLUME ASSEMBLY
S801: DIRECT (ON–OFF)
S1 : POWER (ON–OFF)

The underlined indication the switch position

www.manualscenter.com

6. P.C.BOARDS CONNECTION DIAGRAM

REC OUT ASSEMBLY

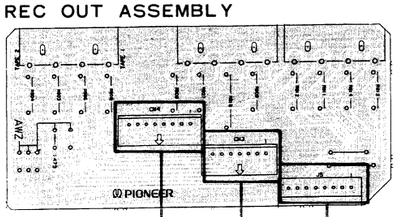

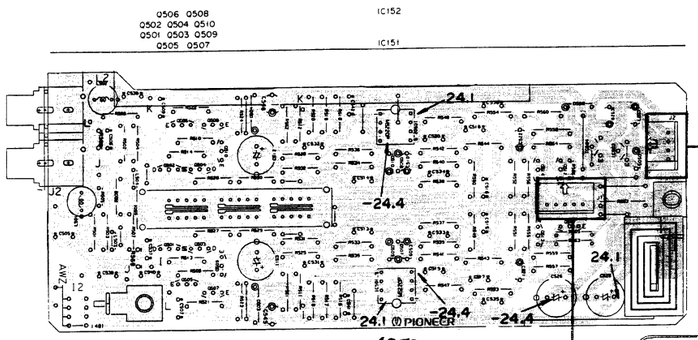

PHONO AMP. ASSEMBLY AWZ 1853

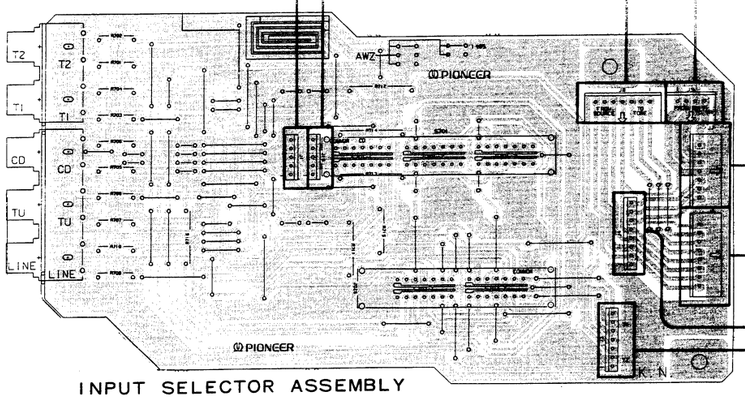

INPUT SELECTOR ASSEMBLY

POWER AMP. ASSEMBLY AWZ1480

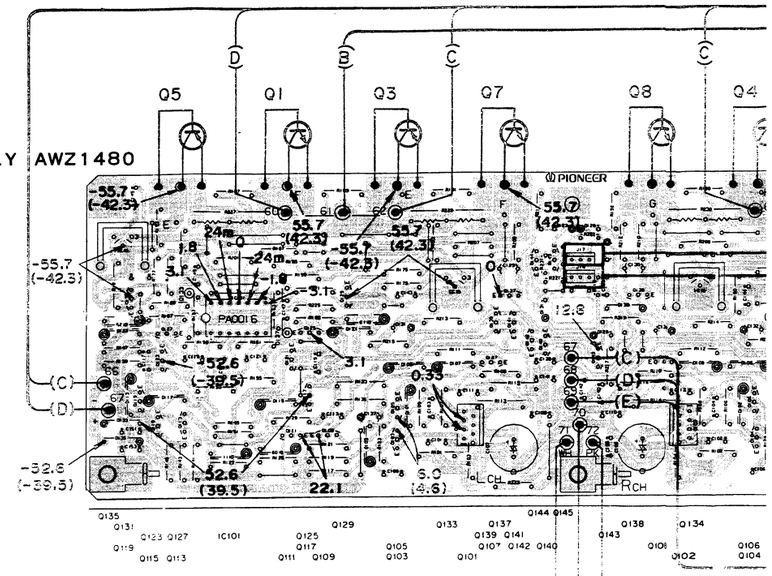

MAIN VOLUME ASSEMBLY

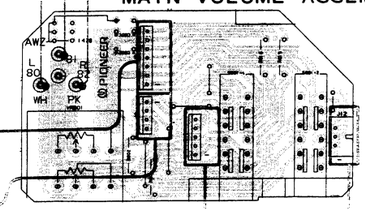

HEADF

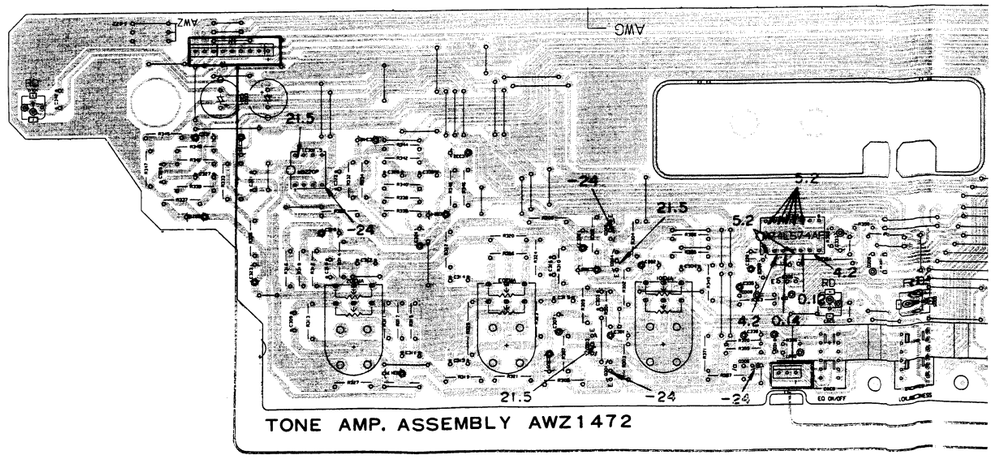

TONE AMP. ASSEMBLY AWZ1472

www.manualscenter.com

7 8 9 10 11 12

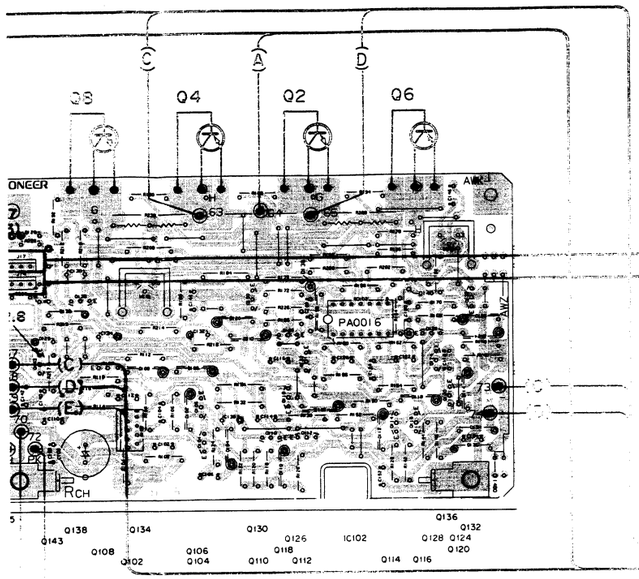

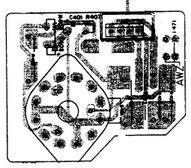

SP. SW. ASSEMBLY

C6
4700p

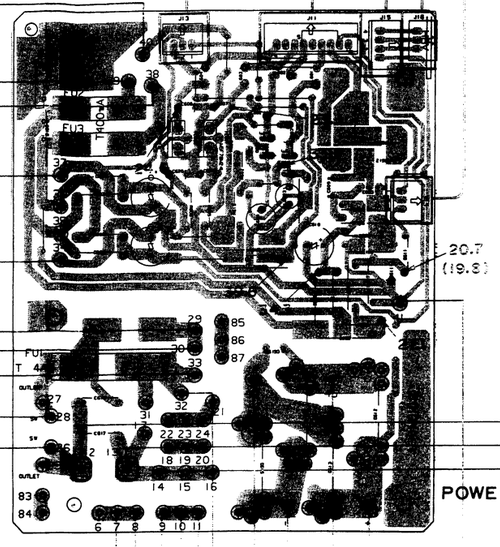

POWER SUPPLY ASSEMBLY

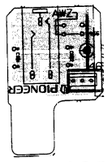

HEADPHONE ASSEMBLY

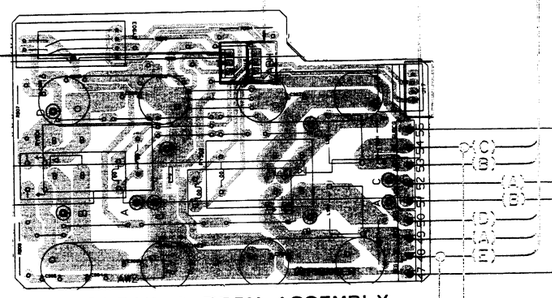

SPEAKER TERM. ASSEMBLY

C4
1000p
/500

C5
100p
/500

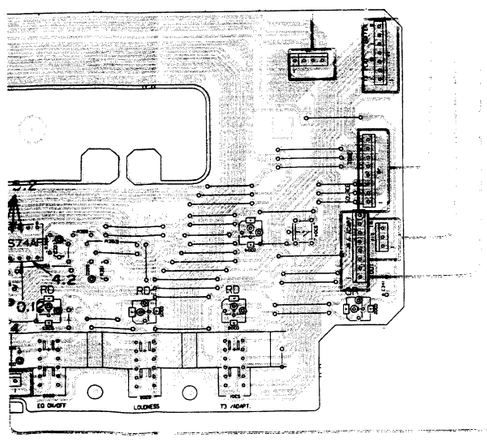

www.manualscenter.com

AC POWER CORD
AC 220/240V
50/60Hz

C1
4700p

C2
4700p

C3-1
22000
/63

C3-1
22000
/63

NOTE

1. This P.C.B connection diagram is viewed from the parts mounted side.
2. The parts which have been mounted on the board can be replaced with those shown with the corresponding wiring symbols listed in the following Table.

P.C.B. pattern diagram indication	Corresponding part symbol	Part Name
Q504 E C B	E C B or E C B	Transistor
Q215	or	Radiator type transistor
D203	D203	Diode
R237	R237	Resistor
C513	C	Capacitor (Polarity)
C518	C	Capacitor (Non-polarity)

Others

P.C.B. pattern diagram indication	Part Name
IC	IC
S	Switch
RY	Relay
L	Coil
F	Filter
VR	Variable resistor or Semi-fixed resistor

3. The capactor terminal marked with ⊖(double circles) shows negatine termianl.
4. The diode terminal marked with ⊖(double circles) shows cathode side.
5. The transistor terminal to which E is affixed shows the emitter.

A B C D

7 8 9 10 11 12 16

7. ELECTRICAL PARTS LIST

NOTES:

- *Parts without part number cannot be supplied.*
- *Parts marked by "◉" are not always kept in stock. Their delivery time may be longer than usual or they may be unavailable.*
- *The ⚠ mark found on some component parts indicates the importance of the safety factor of the part. Therefore, when replacing, be sure to use parts of identical designation.*
- *For your parts Stock Control, the fast moving items are indicated with the marks ★★ and ★.*
  ★★ GENERALLY MOVES FASTER THAN ★
  This classification shall be adjusted by each distributor because it depends on model number, temperature, humidity, etc.
- *When ordering resistors, first convert resistance values into code form as shown in the following examples.*

Ex. 1 When there are 2 effective digits (any digit apart from 0), such as 560 ohm and 47k ohm (tolerance is shown by J = 5%, and K = 10%).

560Ω	*56 × 10¹*	*561*	*RD1/4PS 5 6 1 J*
47kΩ	*47 × 10³*	*473*	*RD1/4PS 4 7 3 J*
0.5Ω	*0R5*		*RN2H 0 R 5 K*
1Ω	*010*		*RS1P 0 1 0 K*

Ex. 2 When there are 3 effective digits (such as in high precision metal film resistors).

5.62kΩ	*562 × 10¹*	*5621*	*RN1/4SR 5 6 2 1 F*

Miscellaneous Parts List

P.C. BOADE ASSEMBLIES

Mark	Symbol & Description	Part No.
	Tone AMP assembly	AWZ1472
	Power AMP assembly	AWZ1480
	PHONO AMP assembly	AWZ1481
	Input selector assembly	
	REC Out assembly	
	Speaker switch assembly	
	Main volume assembly	
	Power supply assembly	
	Speaker terminal assembly	
	Headphone assembly	

OTHERS

Mark	Symbol & Description	Part No.
⚠★★	Q3,Q4,Q5,Q6	2SA1265N
⚠★★	Q1,Q2,Q7,Q8	2SC3182N
⚠	C3 Electrolytic capacitor (22,000μF/63V × 2)	ACH1045
	C4,C5 Ceramic capacitor	CCDSL101J500
	C1,C2,C6 Ceramic capacitor	CKDYB472K50
⚠★	T1 Power transformer (220V/240V)	ATS1087
⚠★	T2 Power transformer (220V/240V)	ATS1088
⚠★★	S1 Push switch (POWER)	ASG−553 (ASG−550)
⚠★★	FU1 Fuse (T4A/250V)	AEK−400
⚠★★	FU2,FU3 Fuse (T400mA/250V)	AEK−407
⚠	AC power cord	ADG1019
★★	S3 Remote slide rotary switch (REC SELECTOR)	ASU1003
★★	S2 Remote slide rotary switch (INPUT SELECTOR)	ASU1005
★★	S4 Remote slide rotary switch (PHONO SELECTOR)	ASU1007

Tone AMP Assembly (AWZ1472)

SEMICONDUCTORS

Mark	Symbol & Description	Part No.
★★	IC301	M5220P
★★	IC302	M74LS74AP
★★	Q301,Q302	2SA992
★★	Q303,Q304	2SC1845
★★	Q305,Q306	2SC2603 (2SC2458)
★	D301,D303−D306 LED (POWER,TAPE3/ADPT LOUDNESS)	AEL1004
★	D302 LED (DIRECT)	AEL1010
★	D308	RD5.1ESB1
★	D310	RD5.6ESB
★	D307,D309,D311	1SS131

SWITCHES

Mark	Symbol & Description	Part No.
★★	S301,S302 Push switch (TAPE3,LOUDNESS)	ASG1019
★★	S304 Tact switch (MUTING)	ASG−711
★★	S303 Push switch (EQ−POWER)	ASG1021

CAPACITORS

Mark	Symbol & Description	Part No.
	C303,C304	CCCSL470J50 (CCDSL470J50)
	C321,C322	CCDSL390J50
	C325,C326,C338	CEAS010M50
	C337,C339,C340	CEAS100M25
	C317,C318,C331,C332	CEAS2R2M50
	C336	CEAS221M10
	C333,C334	CEAS221M25
	C323,C324,C335	CEAS470M10
	C301,C302,C305−C308	CEXA2R2M50
	C329,C330,C341,C342	CFTXA104J50
	C309,C310	CFTXA153J50
	C315,C316	CFTXA183J50
	C311,C312,C327,C328	CFTXA823J50
	C313,C314	CQMA332K50

RESISTORS

Mark	Symbol & Description	Part No.
★★	VR301 Variable resistor (250KΩ × 2:BALANCE)	ATC1027
★★	VR302,VR303 Variable resistor (100KΩ × 2:BASS,TREBLE)	ATC1028
	R350,R351,R353,R368−R371	RD1/8PM□□□J
	Other resistor	RD1/4PM□□□J

Power AMP Assembly (AWZ1480)

SEMICONDUCTORS

Mark	Symbol & Description	Part No.
★★	IC101,IC102	PA0018
★★	Q143	2SA1115 (2SA1048)
★★	Q117,Q118,Q131,Q132,Q125, Q126	2SA1145
★★	Q135,Q136	2SA968
★★	Q113−Q116,Q123,Q124	2SA992
★★	Q103−Q112,Q137,Q138, Q121,Q122	2SC1845
★★	Q145	2SC2235
★★	Q133,Q134	2SC2238
★★	Q139,Q140−Q142	2SC2603 (2SC2458)
★★	Q119,Q120,Q127−Q130,	2SC2705
★★	Q101,Q102	2SK389
★	D131	RD12ESB
★	D133−D136	RD3.0EB
★	D127−D130	1SS131
★	D137−D140	10E2FD
★	D101−D126	11E2

CAPACITORS

Mark	Symbol & Description	Part No.
	C109−C112	CMA150J500
	C101,C102	CMA221J500
	C113,C114	CCDSL271J50
	C123,C124	CMA151J500
	C139−C142	CCDSL221J50
	C119−C122	CMA680J500
	C129,C130	CEANP010M50
	C135	CEASR47M100
	C134	CEAS221M16
	C131,C137,C138,C132	CEAS471M6
	C107,C108	CEXA471M50
	C103,C104	CFTXA473J50
	C105,C106	CQMXA102J100
	C133	CKCYF103Z50 (CKDYF103Z50)
	C151−C154	CQMXA562J100
	C155	CCDSL151J50
	C147−C150	CKDYB102K50
	C115−C118,C143−C146	CMA101J500

RESISTORS

Mark	Symbol & Description	Part No.
⚠	R227−R230 (0.33Ω × 2.5W)	ACN−139
	R107−R110,R131−R134	RD1/2PM□□□J
⚠	R147−R152,R165−R168, R171−R178,R183−R194, R207−R210,R217	RD1/4PMF□□□J
	R113−R116	RDR1/2PM□□□
	R101−R104	RDR1/4PM□□□
⚠	R125−R128,R139−R142, R149,R150,R153−R156, R179−R182,R195−R202	RFA1/4PS101J
	R218,R220−R222,R231	RD1/8PM□□□J
	Other resistors	RD1/4PM□□□J

Phono AMP Assembly (AWZ1853)

SEMICONDUCTORS

Mark	Symbol & Description	Part No.
★★	IC501,IC502	M5220P
★★	IC503	M5F78M24L
★★	IC504	M5F79M24L
★★	Q505−Q510	2SC1845
★★	Q501−Q504	2SK369
★★	Q511−Q514	2SC3327
★	D503,D504	11E2
★	D505,D506	1SS131
★	D507−D510	MA859

SWITCH

Mark	Symbol & Description	Part No.
★★	S501 Remote slide switch (PHONO SELECTOR)	ASU1008

PION-01886 / DRUCK 9

COILS

Mark	Symbol & Description	Part No.
	L501,L502 Inductor (560μH)	ATH1024
	L503,L504 Inductor (3.3μH)	LAU3R3K

CAPACITORS

Mark	Symbol & Description	Part No.
	C541,C542	CCDSL220J50
	C535,C536	CCDSL221J50
	C505,C506,C531,C532	CCDSL271J50
	C521,C522	CEXA220M25
	C511,C512,C526	CEXA221M25
	C509,C510	CEXA470M25
	C525	CEXA471M25
	C519,C520	CFTXA563J50
	C515,C516	CQPXA333J2A
	C517,C518	CFTXA224J50
	C507,C508	CQSA821J50
	C533,C534	CKCYB331K50 (CKDYB331K50)
	C545,C546	CEAS470M10
	C527,C528	CEXA220M50
	C537–C540	CKCYF103Z50 (CKDYF103Z50)
	C513,C514	CQPXA224J2A

RESISTORS

Mark	Symbol & Description	Part No.
	R501–R504,R507,R508, R527–R544	RDR1/4PM□□□J
	R505,R506,R563–R566, R568,R569	RD1/8PM□□□J
	Other resistors	RD1/4PM□□□J

OTHERS

Mark	Symbol & Description	Part No.
	1P pin jack (PHONO:RED)	AKB1027
	1P pin jack (PHONO:WHITE)	AKB1028

Input Selector Assembly

SWITCH

Mark	Symbol & Description	Part No.
★★	S702 Remote slide switch (REC SELECTOR)	ASU1002
★★	S701 Remote slide switch (FUNCTION SELECTOR)	ASU1006

RESISTORS

Mark	Symbol & Description	Part No.
	R701–R704,R707–R710, R713–R716	RD1/4PM□□□J
	R705,R706,R711,R712	RDR1/4PM□□□J

OTHERS

Mark	Symbol & Description	Part No.
	4P pin jack (TAPE1,TAPE2 PLAY)	AKB1007
	6P pin jack (CD,TUNER,LINE IN)	AKB1029

REC Out Assembly

RESISTORS

Mark	Symbol & Description	Part No.
	R803–R814	RD1/4PM□□□J

OTHERS

Mark	Symbol & Description	Part No.
	4P pin jack (TAPE1 REC,TAPE2 REC,TAPE3 REC,TAPE3 PLAY)	AKB1009

Speaker Switch Assembly

SWITCH

Mark	Symbol & Description	Part No.
★★	S401 Rotary switch (SPEAKER A,B)	ASD1002

CAPACITORS

Mark	Symbol & Description	Part No.
	C401,C402	CEAS220M50

RESISTORS

Mark	Symbol & Description	Part No.
	R401,R402	RD1/2PM151J
	R407,R408	RD1/4PMF561J
	Other resistors	RD1/4PM□□□J

Main Volume Assembly

SWITCH

Mark	Symbol & Description	Part No.
★★	S801 Push switch (LINE DIRECT)	ASG1018

CAPACITORS

Mark	Symbol & Description	Part No.
	C801,C802	CKCYB391K50 (CKDYB391K50)

RESISTORS

Mark	Symbol & Description	Part No.
★★	VR801 Variable resistors (60KΩ×2:VOLUME)	ACW1003
	R815,R816	RD1/4PM□□□J
	R801,R802	RDR1/4PM□□□J

Power Supply Assembly

SEMICONDUCTORS

Mark	Symbol & Description	Part No.
★★	IC601	M5F78M24L
★★	IC602	M5F79M24L
★★	Q603	2SA1145
★★	Q602	2SA992
★★	Q601	2SC2705
★	D617	RD30ESB2
★	D607	RD5.1EB (HZ5.1EB)
★	D603–D606,D608,D616	S5566 (11E2)
★	D609–D611,D601,D602	1SS131
★	D612–D615	30D2FC

COILS

Mark	Symbol & Description	Part No.
	L601–L604 Inductor (10mH)	LTA103J

CAPACITORS

Mark	Symbol & Description	Part No.
⚠	C617,C618 (0.01μF/AC400V)	ACG1003
⚠	C615,C616 (0.01μF/AC150V)	ACG1005
	C607,C608	CEAS010M50
	C619,C620	CEAS100M50
	C604,C610	CEAS101M50
	C611	CEAS3R3M50
	C605,C606	CEXA471M50
	C609	CKCYB471K50 (CKDYB471K50)
	C601–C603	CEAS470M50

RESISTORS

Mark	Symbol & Description	Part No.
⚠	R605,R606,R619,R620	RD1/4PMFL220J
⚠	R608	RS1LMF102J
⚠	R611	RS1PMF103J
⚠	R601,R602	RS1PMF391J
⚠	R603,R604	RS2LMF182J
	Other resistors	RD1/4PM□□□J

Speaker Terminal Assembly

RELAIES

Mark	Symbol & Description	Part No.
★★	RY901,RY902 Relay(SPEAKER PROTECTION)	ASR–106
★★	RY903 Relay (HEADPHONE PROTECTION)	ASR1014

COILS

Mark	Symbol & Description	Part No.
	L901,L902 Inductor (2.7mH)	ATH1021

CAPACITORS

Mark	Symbol & Description	Part No.
	C901–C904	CFTXA104J50
	C905–C908	CQMXA472J100

RESISTORS

Mark	Symbol & Description	Part No.
⚠	R901,R902	RS1LMF101J
⚠	R905,R906	RS1PMF681J
⚠	R907,R908	RS2LMF100J
⚠	R903,R904	RS2LMF331J

Headphone Assembly

CAPACITORS

Mark	Symbol & Description	Part No.
	C951,C952	CQMA392K50

OTHERS

Mark	Symbol & Description	Part No.
	Headphone jack (PHONOS)	AKN1002

www.manualscenter.com

PION-01886 / DRUCK 10

ADDITIONAL

Service Manual

PIONEER®
The future of sound and vision.

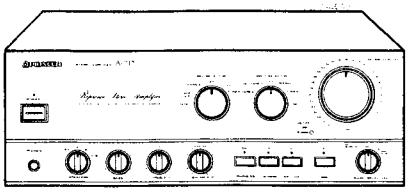

ORDER NO.
ARP1684

STEREO AMPLIFIER

A-717

- **Refer to the service manual ARP1437, A-717.**
- **This manual is applicable to the HEZ, HE, HB, SD/G and KUC types.**
- **This service manual includes the most up-to-date informations.**

PIONEER ELECTRONIC CORPORATION 4-1, Meguro 1-Chome, Meguro-ku, Tokyo 153, Japan
PIONEER ELECTRONICS SERVICE INC. P.O. Box 1760, Long Beach, California 90801 U.S.A.
PIONEER ELECTRONICS OF CANADA, INC. 505 Cochrane Drive, Markham, Ontario L3R 8E3 Canada
PIONEER ELECTRONIC [EUROPE] N.V. Keetberglaan 1, 2740 Beveren, Belgium
PIONEER ELECTRONICS AUSTRALIA PTY. LTD. 178-184 Boundary Road, Braeside, Victoria 3195, Australia TEL: [03] 580-9911
© **PIONEER ELECTRONIC CORPORATION 1989**
YI JAN.1989

www.manualscenter.com

SAFETY INFORMATION

1. SAFETY PRECAUTIONS

The following check should be performed for the continued protection of the customer and service technician.

LEAKAGE CURRENT CHECK

Measure leakage current to a known earth ground (water pipe, conduit, etc.) by connecting a leakage current tester such as Simpson Model 229-2 or equivalent between the earth ground and all exposed metal parts of the appliance (input/output terminals, screwheads, metal overlays, control shaft, etc.). Plug the AC line cord of the appliance directly into a 120V AC 60Hz outlet and turn the AC power switch on. Any current measured must not exceed 0.5mA.

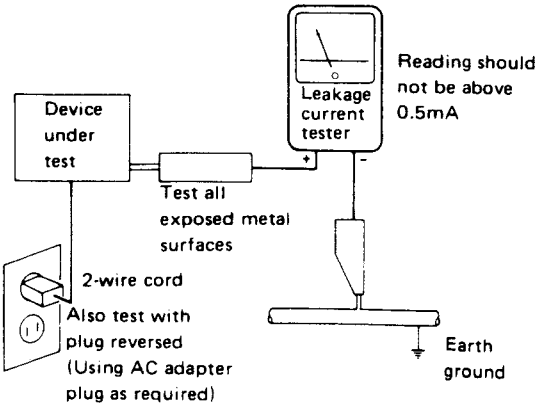

AC Leakage Test

ANY MEASUREMENTS NOT WITHIN THE LIMITS OUTLINED ABOVE ARE INDICATIVE OF A POTENTIAL SHOCK HAZARD AND MUST BE CORRECTED BEFORE RETURNING THE APPLIANCE TO THE CUSTOMER.

2. PRODUCT SAFETY NOTICE

Many electrical and mechanical parts in the appliance have special safety related characteristics. These are often not evident from visual inspection nor the protection afforded by them necessarily can be obtained by using replacement components rated for voltage, wattage, etc. Replacement parts which have these special safety characteristics are identified in this Service Manual.

Electrical components having such features are identified by marking with a ⚠ on the schematics and on the parts list in this Service Manual.

The use of a substitute replacement component which dose not have the same safety characteristics as the PIONEER recommended replacement one, shown in the parts list in this Service Manual, may create shock, fire, or other hazards.

Product Safety is continuously under review and new instructions are issued from time to time. For the latest information, always consult the current PIONEER Service Manual. A subscription to, or additional copies of, PIONEER Service Manual may be obtained at a nominal charge from PIONEER.

1. EXPLODED VIEWS AND PARTS LIST

NOTES:
- *Parts without part number cannot be supplied.*
- *The ⚠ mark found on some component parts indicates the importance of the safety factor of the part. Therefore, when replacing, be sure to use parts of identical designation.*
- *Parts marked by "◉" are not always kept in stock. Their delivery time may be longer than usual or they may be unavailable.*

Parts List of Exterior

Mark	No.	Parts No.	Description
⚠	1	2SA1265N	Transistor(Q3,Q4,Q5,Q6)
⚠	2	2SC3182N	Transistor(Q1,Q2,Q7,Q8)
⚠	3	ACH1045	Electrolytic capacitor (C3 22,000μF/63V×2)
	4	CCDSL101K500	Ceramic capacitor(C4,C5)
	5	CKDYB472K50	Ceramic capacitor(C1,C2,C6)
⚠	6	ATS1087	Power transformer (AC220V/240V,T1)
⚠	7	ATS1088	Power transformer (AC220V/240V,T2)
⚠	8	ASG−553	Push switch(POWER,S1)
	9	ASU1003	Remote slide rotary switch (REC SELECTOR,S3)
	10	ASU1005	Remote slide rotary switch (INPUT SELECTOR,S2)
	11	ASU1007	Remote slide rotary switch (PHONO SELECTOR,S4)
⚠	12	AEK−400	Fuse(FU1 T4A/250V)
⚠	13	AEK−407	Fuse(FU2 FU3 T400mA/250V)
	14	AMR1158	Leg assembly
	15	AMR1159	Leg assembly
	16	ANK1029	Shield plate
	17	ANK1031	Volume holder
	18	AAB1036	Rotary knob L(VOLUME)
	19	AAB1038	Rotary knob M (REC,INPUT SELECTOR)
	20	AAB1040	Rotary knob S (PHONO SELECTOR, BALANCE,TREBLE,BASS, SPEAKERS B)
	21	AAD1016	Tact Knob B (MUTING)
	22	AAD1168	Power knob (POWER)
	23	AAD1162	Push knob (LOUDNESS, ADPT/TAPE3)
	24	AAD1164	Direct knob (LINE DIRECT)
	25	AAM−030	Name plate
	26	AMB1200	Panel base
	27	AMR1160	LED Lens
	28	ANB1105	Front panel
		ANB1216	Front panel (MARKⅡ)
	29	ANE1075	Bonnet case
	30	ABE1009	Washer
	31	ABH1033	Coil spring A
	32	ABH1034	Coil spring B
	33	AEC−818	Mica sheet
	34	AEC−882	Strain relief

Mark	No.	Parts No.	Description
	35	AMR1161	Joint arm
	36	AMR1178	Joint
	37	ANL1007	Long shaft assembly
	38	ABA−297	Screw
	39	ABA−298	Screw
	40	ABA1004	Screw
	41	ABA1048	Screw
	42	ABA1009	Screw
	43	ABA1011	Screw
	44	ABA1034	Screw
	45	ABA1047	Screw
	46	ABN−065	Shaft nut
	47	AEH1005	Acetate tape B2
⚠	48	ADG1019	AC Power cord
	49	BBZ40P080FZK	Screw
	50	NK90FUC	Nut
	51	VMZ30P060FCU	Screw
	52	AWZ1472	Tone AMP assembly
	53	AWZ1480	Power AMP assembly
	54	AWZ1853	PHONO AMP assembly
	55	AKM1019	Plug (Pin-jack)
	101		Input selector assembly
	102		REC Out assembly
	103		Speaker switch assembly
	104		Main volume assembly
	105		Speaker terminal assembly
	106		Power supply assembly
	107		Headphone assembly
	108		Terminal (GND)
	109		Trans frame
	110		Right frame
	111		Rear panel
	112		Panel stay
	113		Bottom plate
	114		Heat sink holder
	115		Heat sink
	116		Heat sink
	117		Spacer
	118		Cushion rubber
	119		.....
	120		.....
	121		Boss
	122		Pin gromet
	123		.....
	124		Binder
	125		.....

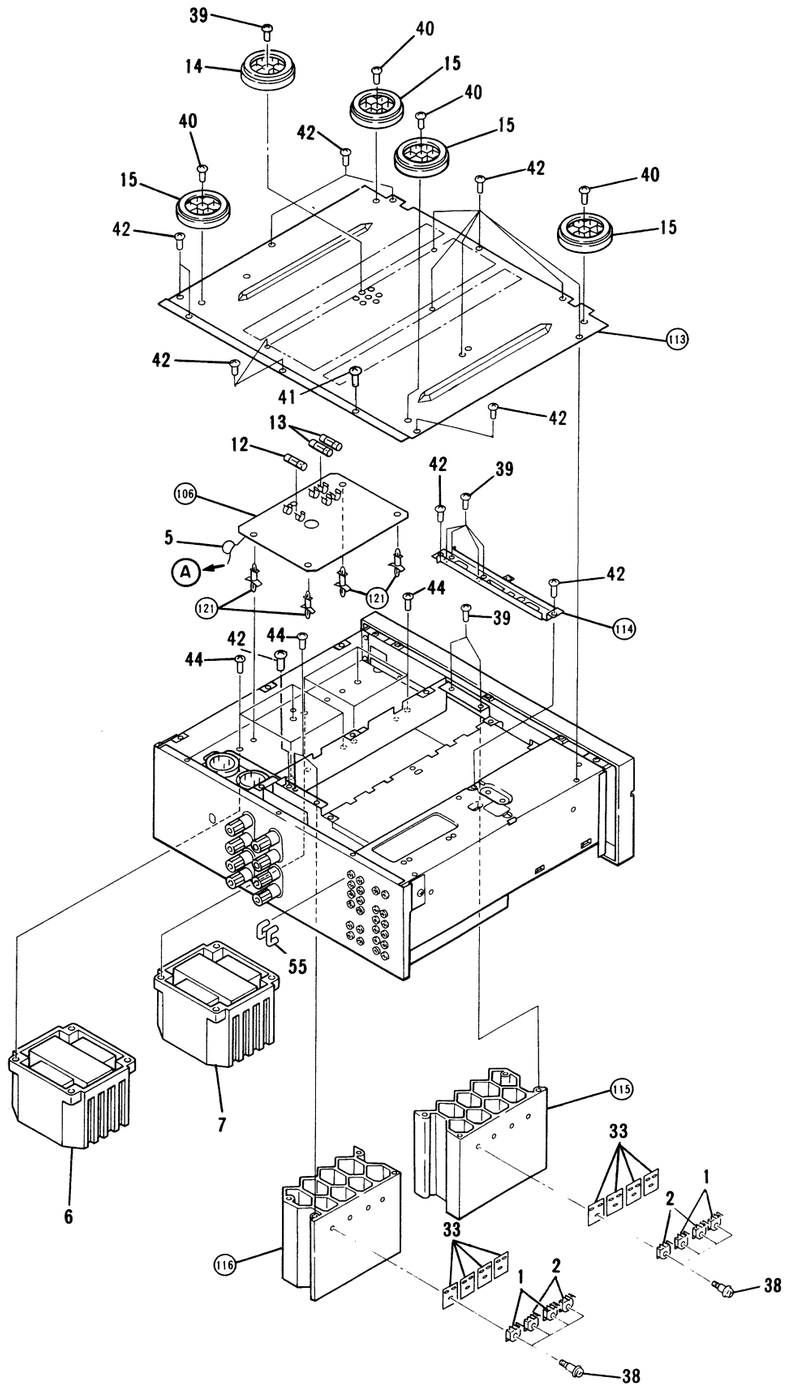

Exterior

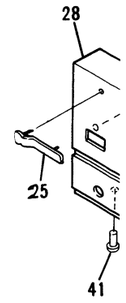

Before an
remove th
(For the r
plate mu
capacitor(
shown in

www.manualscenter.com

Exterior

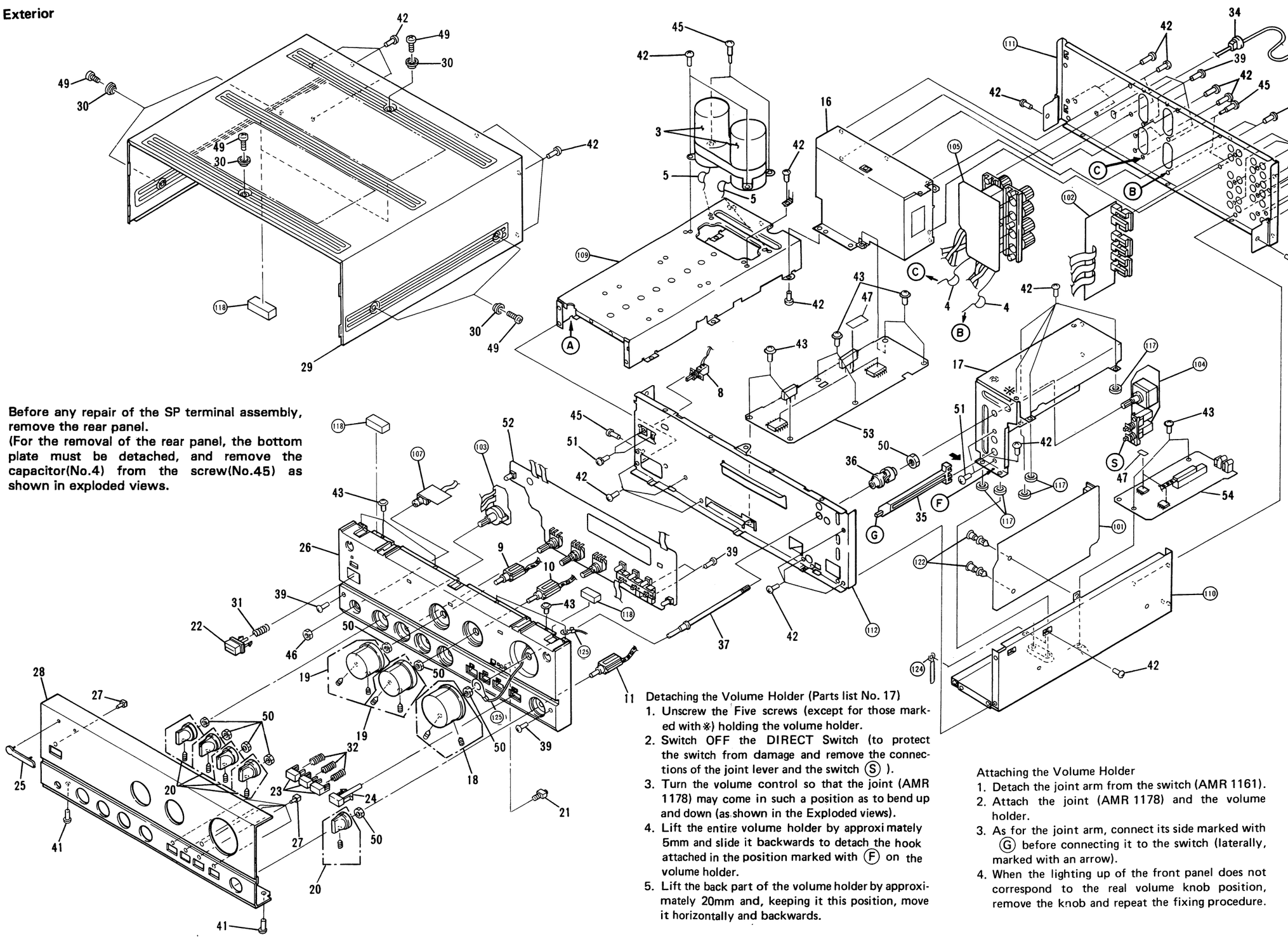

Before any repair of the SP terminal assembly, remove the rear panel.
(For the removal of the rear panel, the bottom plate must be detached, and remove the capacitor(No.4) from the screw(No.45) as shown in exploded views.

Detaching the Volume Holder (Parts list No. 17)

1. Unscrew the Five screws (except for those marked with※) holding the volume holder.
2. Switch OFF the DIRECT Switch (to protect the switch from damage and remove the connections of the joint lever and the switch Ⓢ).
3. Turn the volume control so that the joint (AMR 1178) may come in such a position as to bend up and down (as shown in the Exploded views).
4. Lift the entire volume holder by approximately 5mm and slide it backwards to detach the hook attached in the position marked with Ⓕ on the volume holder.
5. Lift the back part of the volume holder by approximately 20mm and, keeping it this position, move it horizontally and backwards.

Attaching the Volume Holder

1. Detach the joint arm from the switch (AMR 1161).
2. Attach the joint (AMR 1178) and the volume holder.
3. As for the joint arm, connect its side marked with Ⓖ before connecting it to the switch (laterally, marked with an arrow).
4. When the lighting up of the front panel does not correspond to the real volume knob position, remove the knob and repeat the fixing procedure.

2. SCHEMATIC DIAGRAMS

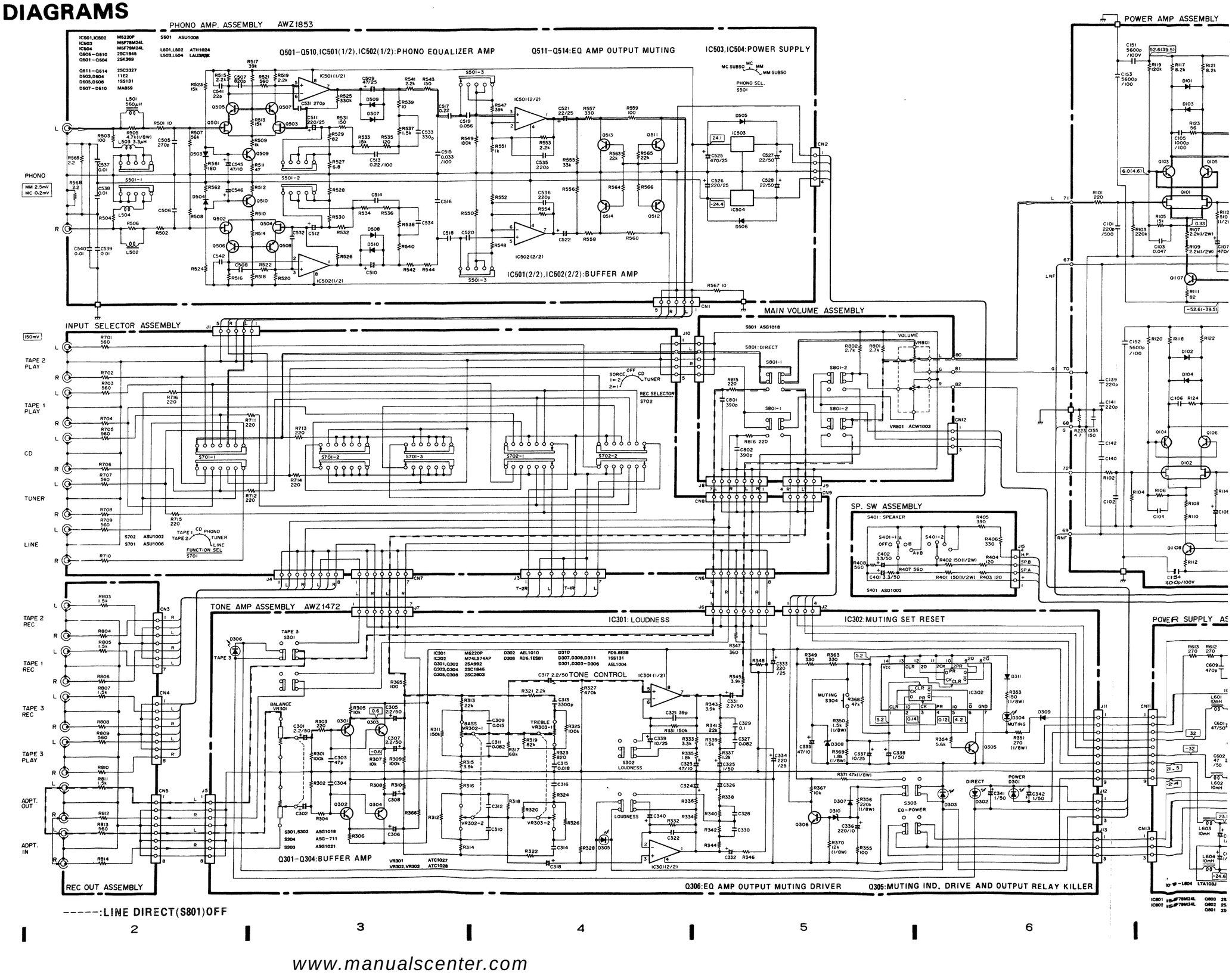

www.manualscenter.com

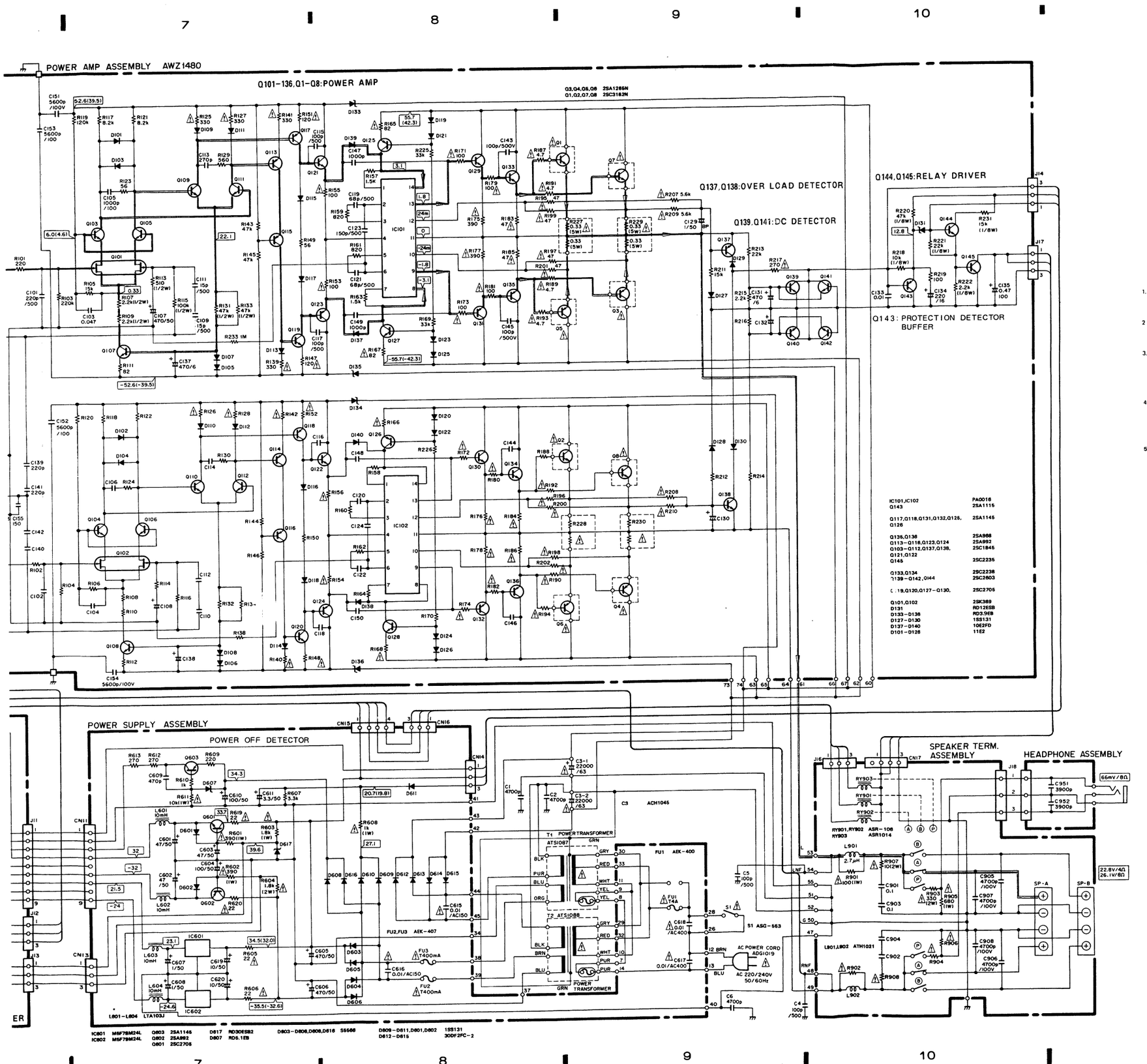

1. RESISTORS:
Indicated in Ω, ¼W, ⅛W, ±5% tolerance unless otherwise noted k : kΩ, M : MΩ, (F) : ±1%, (G) : ±2%, (K) : ±10% (M); ±20% tolerance

2. CAPACITORS:
Indicated in capacity (μF)/voltage (V) unless otherwise noted p : pF
Indication without voltage is 50V except electrolytic capacitor.

3. VOLTAGE, CURRENT:
▭ : Signal voltage at (130W +130W 4Ω) out (1KHz)
▭ : DC voltage (V) at no input signal
Value in ( ) is DC voltage at rated power.
⇦ mA : DC current at no input signal

4. OTHERS:
➡ : Signal route
The ⚠ mark found on some component parts indicates the importance of the safety factor of the part. Therefore, when replacing, be sure to use parts of identical designation.

5. SWITCHES

TONE AMP ASSEMBLY
S301: TAPE 3 (ON-OFF)
S302: LOUDNESS (ON-OFF)
S303: EQ. POWER (ON-OFF)
S304: MUTING (ON-OFF)

SPEAKER SWITCH ASSEMBLY
S401: SPEAKERS A, B (OFF-A-B-A+B)

PHONO AMP ASSEMBLY
S501: PHONO SEL. (MC/SUB-MC-MM-MM/SUB)

INPUT SELECTOR ASSEMBLY
S701: FUNCTION SEL. (TA2-TA1-CD-PHONO-TUNER-LINE
S702: REC. SEL. (2→1-1→2-SOURCE-OFF-CD-TUNER

MAIN VOLUME ASSEMBLY
S801: DIRECT (ON-OFF)
S1 : POWER (ON-OFF)

The underlined indication the switch position

www.manualscenter.com

3. P.C.BOARDS CONNECTION DIAGRAM

REC OUT ASSEMBLY

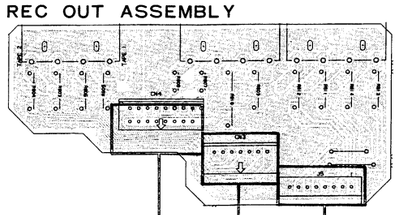

POWER AMP. ASSEMBLY AWZ1480

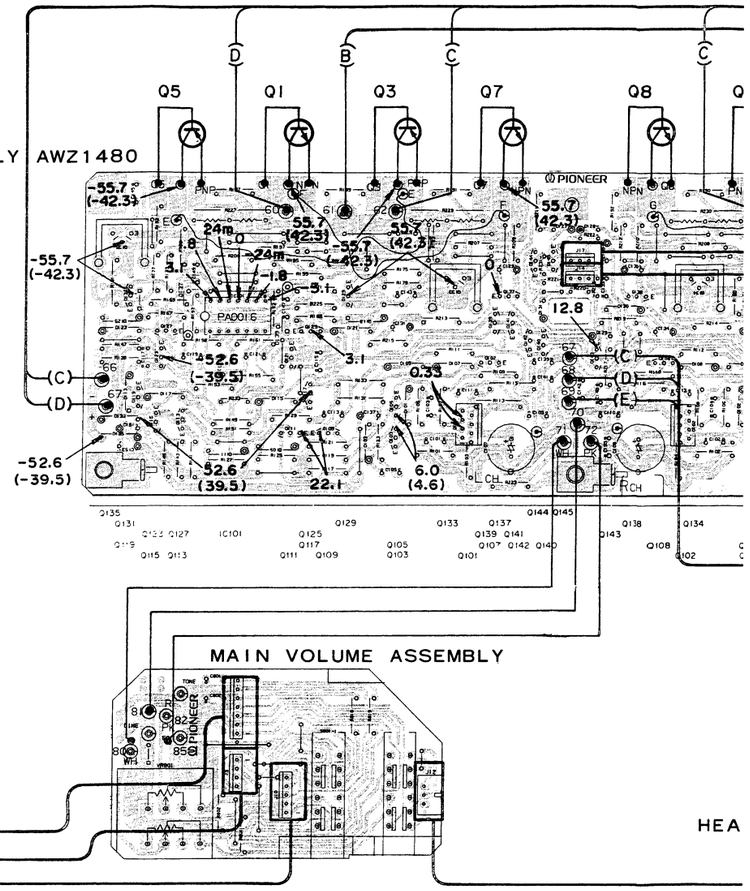

MAIN VOLUME ASSEMBLY

HEA

PHONO AMP. ASSEMBLY AWZ1853

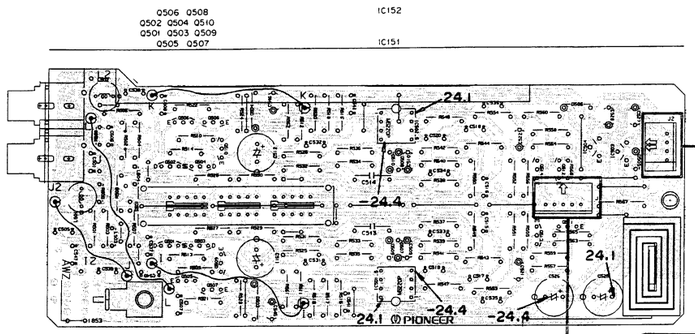

INPUT SELECTOR ASSEMBLY

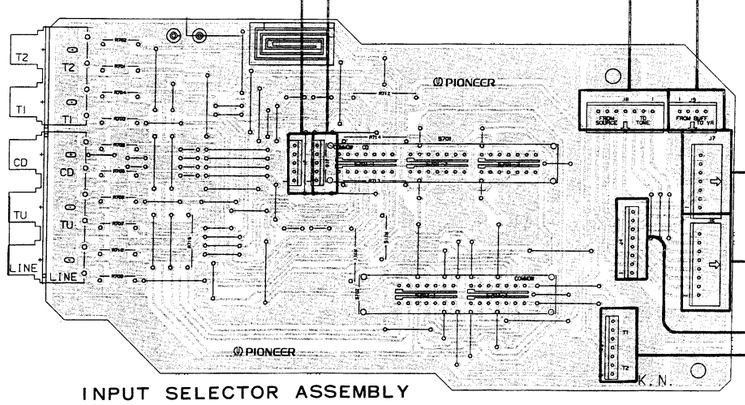

TONE AMP. ASSEMBLY AWZ1472

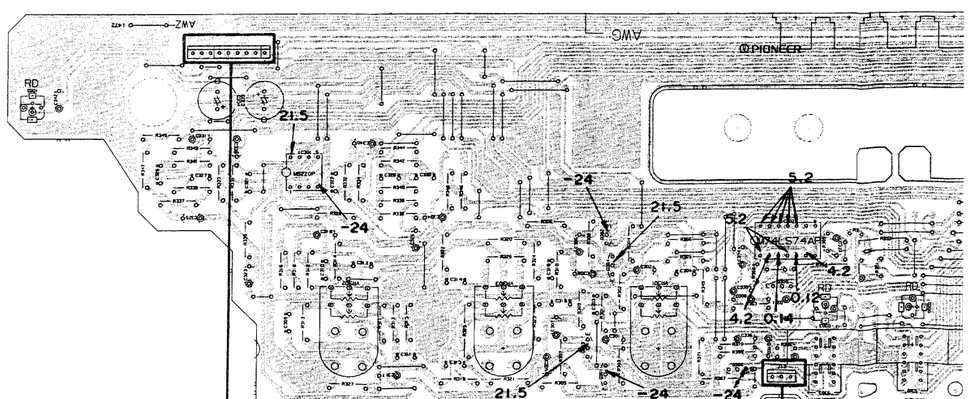

www.manualscenter.com

7 8 9 10 11 6

NOTE

1. This P.C.B connection diagram is viewed from the parts mounted side.
2. The parts which have been mounted on the board can be replaced with those shown with the corresponding wiring symbols listed in the following Table.

P.C.B. pattern diagram indication	Corresponding part symbol	Part Name
Q504		Transistor
Q215		Radiator type transistor
D203		Diode
R237		Resistor
C513		Capacitor (Polarity)
C518		Capacitor (Non-polarity)

Others

P.C.B. pattern diagram indication	Part Name
IC	IC
S	Switch
RY	Relay
L	Coil
F	Filter
VR	Variable resistor or Semi-fixed resistor

3. The capactor terminal marked with ⓞ(double circles) shows negatine termianl.
4. The diode terminal marked with ⓞ(double circles) shows cathode side.
5. The transistor terminal to which E is affixed shows the emitter.

SP. SW. ASSEMBLY

POWER SUPPLY ASSEMBLY

AC POWER CORD
AC 220/240V
50/60Hz

HEADPHONE ASSEMBLY

SPEAKER TERM. ASSEMBLY

POWER TRANSFORMER T1

POWER TRANSFORMER T2

www.manualscenter.com

7 8 9 10 11 12 14

NOTE:
This picture shows the foil side of the printed circuit.

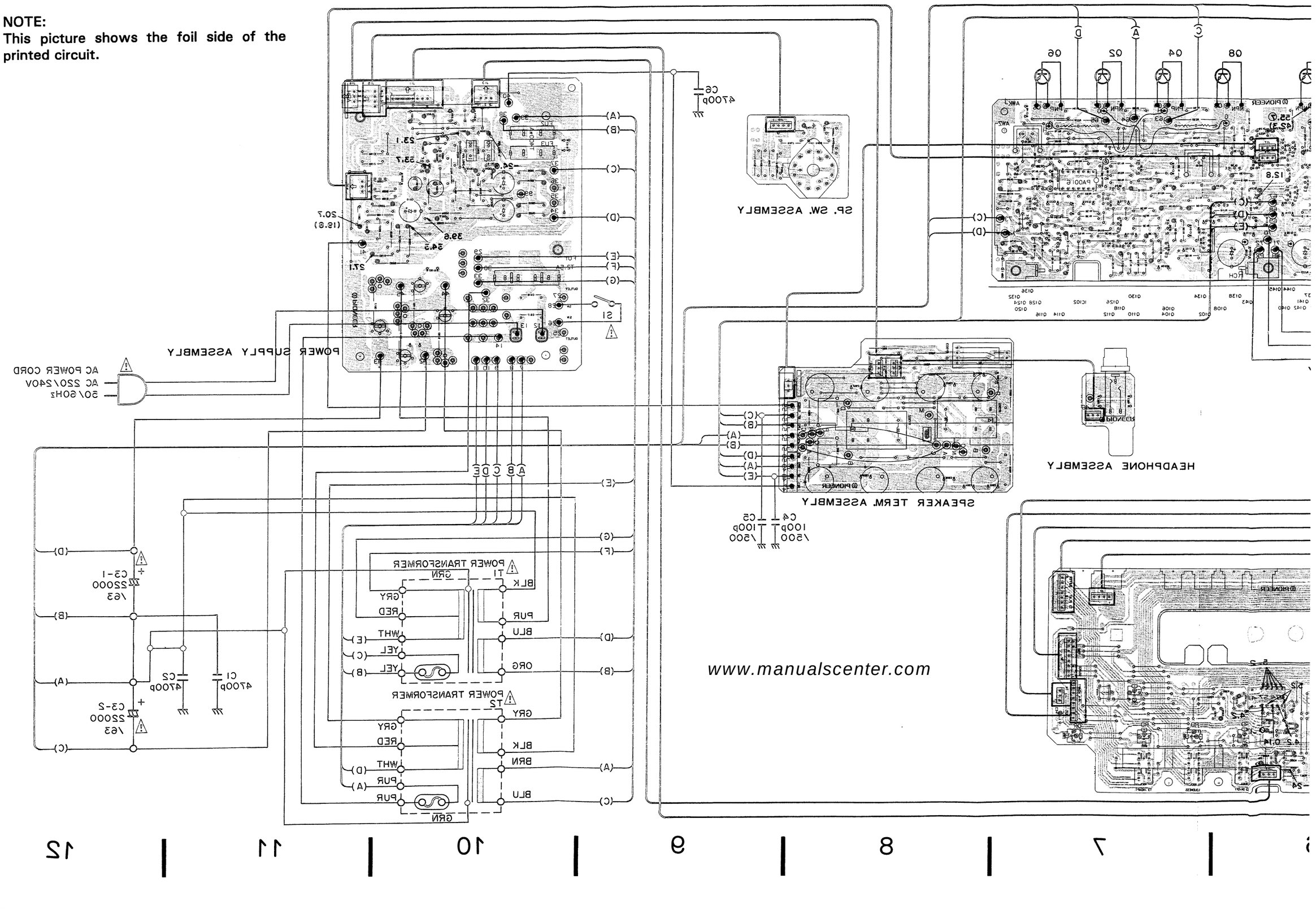

www.manualscenter.com

www.manualscenter.com

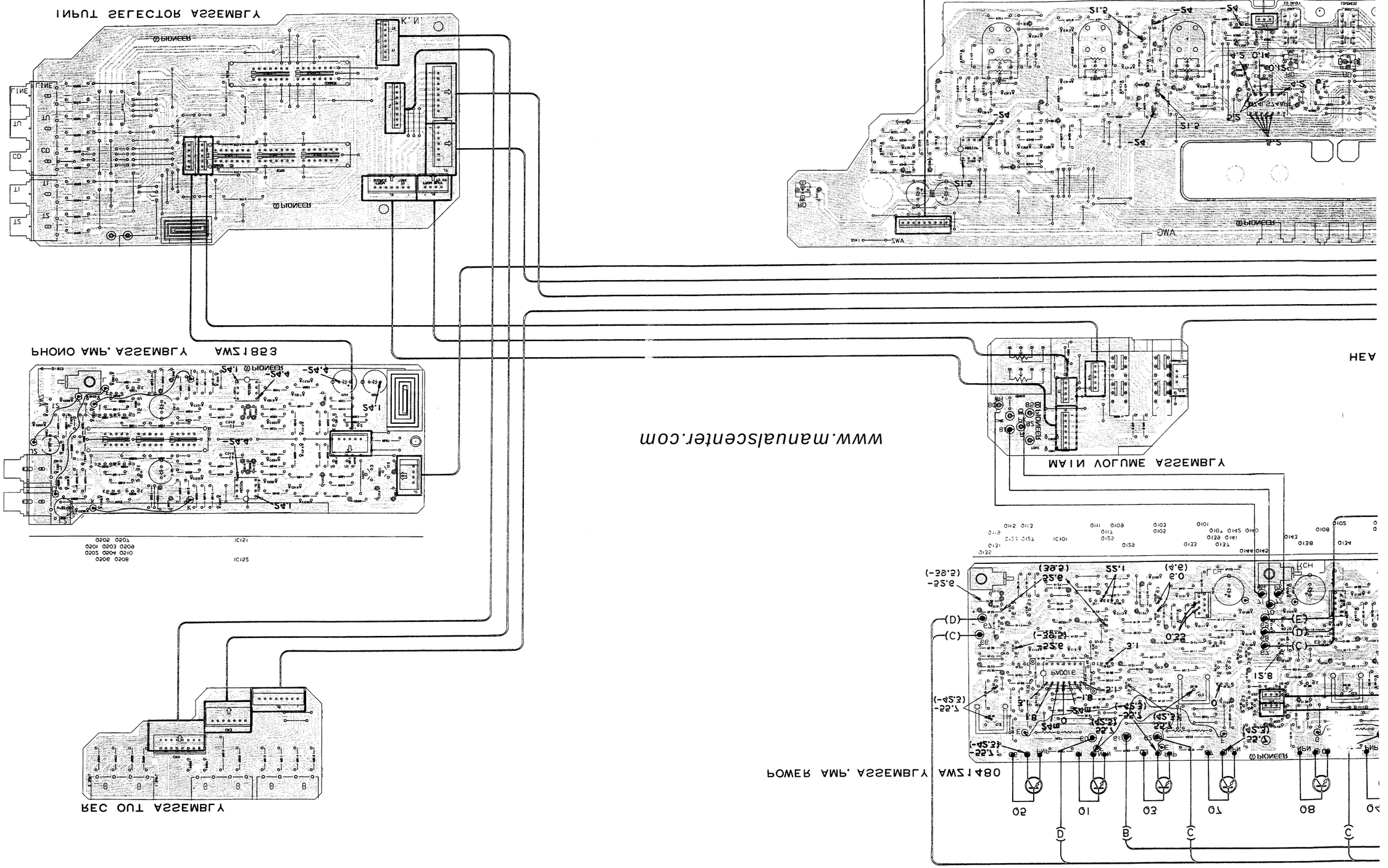

4. ELECTRICAL PARTS LIST

NOTES:

- *Parts without part number cannot be supplied.*
- *Parts marked by "◉" are not always kept in stock. Their delivery time may be longer than usual or they may be unavailable.*
- *The ⚠ mark found on some component parts indicates the importance of the safety factor of the part. Therefore, when replacing, be sure to use parts of identical designation.*
- *When ordering resistors, first convert resistance values into code form as shown in the following examples.*

Ex. 1 When there are 2 effective digits (any digit apart from 0), such as 560 ohm and 47k ohm (tolerance is shown by J = 5%, and K = 10%).

560Ω	*56 × 10¹*	*561*	*RD1/4PS 5 6 1 J*
47kΩ	*47 × 10³*	*473*	*RD1/4PS 4 7 3 J*
0.5Ω	*0R5*		*RN2H 0 R 5 K*
1Ω	*010*		*RS1P 0 1 0 K*

Ex. 2 When there are 3 effective digits (such as in high precision metal film resistors).

5.62kΩ	*562 × 10¹*	*5621*	*RN1/4SR 5 6 2 1 F*

Miscellaneous Psrts List

P.C. BOADE ASSEMBLIES

Mark	Symbol & Description	Part No.
	Tone AMP assembly	AWZ1472
	Power AMP assembly	AWZ1480
	PHONO AMP assembly	AWZ1853
	Input selector assembly	
	REC Out assembly	
	Speaker switch assembly	
	Main volume assembly	
	Power supply assembly	
	Speaker terminal assembly	
	Headphone assembly	

OTHERS

Mark	Symbol & Description	Part No.
⚠	Q3,Q4,Q5,Q6	2SA1265N
⚠	Q1,Q2,Q7,Q8	2SC3182N
⚠	C3 Electrolytic capacitor (22,000μF/63V × 2)	ACH1045
	C4,C5 Ceramic capacitor	CCDSL101K500
	C1,C2,C6 Ceramic capacitor	CKDYB472K50
⚠	T1 Power transformer (220V/240V)	ATS1087
⚠	T2 Power transformer (220V/240V)	ATS1088
⚠	S1 Push switch (POWER)	ASG−553
⚠	FU1 Fuse (T4A/250V)	AEK−400
⚠	FU2,FU3 Fuse (T400mA/250V)	AEK−407
⚠	AC power cord	ADG1019
	S3 Remote slide rotary switch (REC SELECTOR)	ASU1003
	S2 Remote slide rotary switch (INPUT SELECTOR)	ASU1005
	S4 Remote slide rotary switch (PHONO SELECTOR)	ASU1007

Tone AMP Assembly (AWZ1472)

SEMICONDUCTORS

Mark	Symbol & Description	Part No.
	IC301	M5220P
	IC302	M74LS74AP
	Q301,Q302	2SA992
	Q303,Q304	2SC1845
	Q305,Q306	2SC2603
	D301,D303−D306 LED (POWER,TAPE3/ADPT LOUDNESS)	AEL1004
	D302 LED (DIRECT)	AEL1010
	D308	RD5.1ESB1
	D310	RD5.6ESB
	D307,D309,D311	1SS131

SWITCHES

Mark	Symbol & Description	Part No.
	S301,S302 Push switch (TAPE3,LOUDNESS)	ASG1019
	S304 Tact switch (MUTING)	ASG−711
	S303 Push switch (EQ−POWER)	ASG1021

www.manualscenter.com

CAPACITORS

Mark	Symbol & Description	Part No.
	C303,C304	CCCSL470J50
	C321,C322	CCDSL390J50
	C325,C326,C338,C341,C342	CEAS010M50
	C337,C339,C340	CEAS100M25
	C317,C318,C331,C332	CEAS2R2M50
	C336	CEAS221M10
	C333,C334	CEAS221M25
	C323,C324,C335	CEAS470M10
	C301,C302,C305−C308	CEXA2R2M50
	C329,C330	CFTXA104J50
	C309,C310	CFTXA153J50
	C315,C316	CFTXA183J50
	C311,C312,C327,C328	CFTXA823J50
	C313,C314	CQMA332K50

RESISTORS

Mark	Symbol & Description	Part No.
	VR301 Variable resistor (250KΩ × 2:BALANCE)	ACT1027
	VR302,VR303 Variable resistor (100KΩ × 2:BASS,TREBLE)	ACT1028
	R350,R351,R353,R356, R368−R371	RD1/8PM□□□J
	Other resistor	RD1/4PM□□□J

Power AMP Assembly (AWZ1480)

SEMICONDUCTORS

Mark	Symbol & Description	Part No.
	IC101,IC102	PA0016
	Q143	2SA1115
	Q117,Q118,Q125,Q126,Q131, Q132	2SA1145
	Q135,Q136	2SA968
	Q113−Q116,Q123,Q124	2SA992
	Q103−Q112,Q121,Q122,Q137, Q138	2SC1845
	Q145	2SC2235
	Q133,Q134	2SC2238
	Q139,Q140−Q142,Q144	2SC2603
	Q119,Q120,Q127−Q130, Q101,Q102	2SC2705
		2SK389
	D131	RD12ESB
	D133−D136	RD3.9EB
	D127−D130	1SS131
	D137−D140	10E2FD
	D101−D126	11E2

CAPACITORS

Mark	Symbol & Description	Part No.
	C109−C112	CMA150J500
	C101,C102	CMA221J500
	C113,C114	CCDSL271J50
	C123,C124	CMA151J500
	C139−C142	CCDSL221J50
	C119−C122	CMA680J500
	C129,C130	CEANP010M50
	C135	CEASR47M100
	C134	CEAS221M16
	C131,C132,C137,C138	CEAS471M6
	C107,C108	CEXA471M50
	C103,C104	CFTXA473J50
	C105,C106	CQMXA102J100
	C133	CKCYF103Z50
	C151−C154	CQMXA562J100
	C155	CCDSL151J50
	C147−C150	CKDYB102K50
	C115−C118,C143−C146	CMA101J500

RESISTORS

Mark	Symbol & Description	Part No.
⚠	R227−R230 (0.33Ω × 2.5W)	ACN−139
	R107−R110,R131−R134	RD1/2PM□□□J
⚠	R147,R148,R151,R152,R165−R168,R171−R178,R183−R194,R207−R210,R217	RD1/4PMF□□□J
	R113−R116	RDR1/2PM□□□
	R101−R104	RDR1/4PM□□□
⚠	R125−R128,R139−R142, R149,R150,R153−R156, R179−R182,R195−R202	RFA1/4PS101J
	R138,R218,R220−R222,R231, R233	RD1/8PM□□□J
	Other resistors	RD1/4PM□□□J

Phono AMP Assembly (AWZ1853)

SEMICONDUCTORS

Mark	Symbol & Description	Part No.
	IC501,IC502	M5220P
	IC503	M5F78M24L
	IC504	M5F79M24L
	Q505−Q510	2SC1845
	Q501−Q504	2SK369
	Q511−Q514	2SC3327
	D503,D504	11E2
	D505,D506	1SS131
	D507−D510	MA859

SWITCH

Mark	Symbol & Description	Part No.
	S501 Remote slide switch (PHONO SELECTOR)	ASU1008

COILS

Mark	Symbol & Description	Part No.
	L501,L502 Inductor (560μH)	ATH1024
	L503,L504 Inductor (3.3μH)	LAU3R3K

CAPACITORS

Mark	Symbol & Description	Part No.
	C541,C542	CCDSL220J50
	C535,C536	CCDSL221J50
	C505,C506,C531,C532	CCDSL271J50
	C545,C546	CEAS470M10
	C521,C522	CEXA220M25
	C527,C528	CEXA220M50
	C511,C512,C526	CEXA221M25
	C509,C510	CEXA470M25
	C525	CEXA471M25
	C519,C520	CFTXA563J50
	C515,C516	CQPXA333J2A
	C517,C518	CFTXA224J50
	C507,C508	CQSA821J50
	C533,C534	CKCYB331K50
	C537−C540	CKCYF103Z50
	C513,C514	CQPXA224J2A

RESISTORS

Mark	Symbol & Description	Part No.
	R501−R504,R507,R508, R527−R544	RDR1/4PM□□□J
	R505,R506,R563−R566, R568,R569	RD1/8PM□□□J
	Other resistors	RD1/4PM□□□J

OTHERS

Mark	Symbol & Description	Part No.
	1P pin jack (PHONO:RED)	AKB1027
	1P pin jack (PHONO:WHITE)	AKB1028

Input Selector Assembly

SWITCH

Mark	Symbol & Description	Part No.
	S702 Remote slide switch (REC SELECTOR)	ASU1002
	S701 Remote slide switch (FUNCTION SELECTOR)	ASU1006

RESISTORS

Mark	Symbol & Description	Part No.
	R701−R704,R707−R710, R713−R716	RD1/4PM□□□J
	R705,R706,R711,R712	RDR1/4PM□□□J

OTHERS

Mark	Symbol & Description	Part No.
	4P pin jack (TAPE1,TAPE2 PLAY)	AKB1007
	6P pin jack (CD,TUNER,LINE IN)	AKB1029

REC Out Assembly

RESISTORS

Mark	Symbol & Description	Part No.
	R803−R806,R809−R814	RD1/4PM□□□J
	R807,R808	RD1/8PM□□□J

OTHERS

Mark	Symbol & Description	Part No.
	4P pin jack (TAPE1 REC,TAPE2 REC,TAPE3 REC,TAPE3 PLAY)	AKB1009

Speaker Switch Assembly

SWITCH

Mark	Symbol & Description	Part No.
	S401 Rotary switch (SPEAKER A,B)	ASD1002

CAPACITORS

Mark	Symbol & Description	Part No.
	C401,C402	CEAS3R3M50

RESISTORS

Mark	Symbol & Description	Part No.
	R401,R402	RD1/2PM151J
	R407,R408	RD1/4PMF561J
	R403−R406	RD1/4PM□□□J

Main Volume Assembly

SWITCH

Mark	Symbol & Description	Part No.
	S801 Push switch (LINE DIRECT)	ASG1018

CAPACITORS

Mark	Symbol & Description	Part No.
	C801,C802	CKCYB391K50

RESISTORS

Mark	Symbol & Description	Part No.
	VR801 Variable resistors (60KΩ×2:VOLUME)	ACW1003
	R815,R816	RD1/4PM221J
	R801,R802	RDR1/4PM272J

Power Supply Assembly

SEMICONDUCTORS

Mark	Symbol & Description	Part No.
	IC601	M5F78M24L
	IC602	M5F79M24L
	Q603	2SA1145
	Q602	2SA992
	Q601	2SC2705
	D617	RD30ESB2
	D607	RD5.1EB
	D603−D606,D608,D616	S5566
	D601,D602,D609−D611	1SS131
	D612−D615	30DF2FC−2

COILS

Mark	Symbol & Description	Part No.
	L601−L604 Inductor (10mH)	LTA103J

CAPACITORS

Mark	Symbol & Description	Part No.
⚠	C617,C618 (0.01μF/AC400V)	ACG1003
⚠	C615,C616 (0.01μF/AC150V)	ACG1005
	C607,C608	CEAS010M50
	C619,C620	CEAS100M50
	C610	CEAS101M50
	C604	CEHAQ101M50
	C611	CEAS3R3M50
	C605,C606	CEXA471M50
	C609	CKCYB471K50
	C601−C603	CEAS470M50

RESISTORS

Mark	Symbol & Description	Part No.
⚠	R605,R606,R619,R620	RD1/4PMFL220J
⚠	R608	RS1LMF102J
⚠	R611	RS1PMF103J
⚠	R601,R602	RS1PMF391J
⚠	R603,R604	RS2LMF182J
	Other resistors	RD1/4PM□□□J

Speaker Terminal Assembly

RELAIES

Mark	Symbol & Description	Part No.
	RY901,RY902 Relay(SPEAKER PROTECTION)	ASR−106
	RY903 Relay (HEADPHONE PROTECTION)	ASR1014

COILS

Mark	Symbol & Description	Part No.
	L901,L902 Inductor (2.7μH)	ATH1021

CAPACITORS

Mark	Symbol & Description	Part No.
	C901−C904	CFTXA104J50
	C905−C908	CQMXA472J100

RESISTORS

Mark	Symbol & Description	Part No.
⚠	R901,R902	RS1LMF101J
⚠	R905,R906	RS1PMF681J
⚠	R907,R908	RS2LMF100J
⚠	R903,R904	RS2LMF331J

OTHERS

Mark	Symbol & Description	Part No.
	Speaker Terminal (4P)	AKE1006

Headphone Assembly

CAPACITORS

Mark	Symbol & Description	Part No.
	C951,C952	CQMA392K50

OTHERS

Mark	Symbol & Description	Part No.
	Headphone jack (PHONOS)	AKN1002

PION-01886 / DRUCK 20

5. FOR HE, HB, SD/G AND KUC TYPES

1. CONTRAST OF MISCELLANEOUS PARTS

NOTES:

- *Parts without part number cannot be supplied.*
- *The ⚠ mark found on some component parts indicates the importance of the safety factor of the part. Therefore, when replacing, be sure to use parts of identical designation.*
- *Parts marked by "◉" are not always kept in stock. Their delivery time may be longer than usual or they may be unavailable.*

The A-717/HE, HB, SD/G and KUC types are the same as the A-717/HEZ type with the exception of the following sections.

Mark	Symbol & Description	Part No. A-717/HEZ type	A-717/HE type	A-717/HB type	A-717/SD/G type	A-717/KUC type
	Power AMP assembly	AWZ1480	AWZ1487*	AWZ1487*	AWZ1670*	AWZ1670*
	PHONO AMP assembly	AWZ1853	AWZ1488	AWZ1488	AWZ1695	AWZ1695
	Main Volume assembly	Non Supply	Non Supply	Non Supply	Non Supply	Non Supply
	REC out assembly	Non Supply	Non Supply	Non Supply	Non Supply	Non Supply
	Input Selector assembly	Non Supply	Non Supply	Non Supply	Non Supply	Non Supply
	Head Phone assembly	Non Supply	Non Supply	Non Supply	Non Supply	Non Supply
	Power Supply assembly	Non Supply	Non Supply	Non Supply	Non Supply	Non Supply
	Speaker terminal assembly	Non Supply	Non Supply	Non Supply	Non Supply	Non Supply
⚠	AC Power Cord	ADG1019	ADG1019	ADG-051	ADG1016	ADG-077
⚠	Fu1 Fuse (T4A/250)	AEK-400	AEK-400	.....	.....	.....
⚠	Fu1 Fuse (8A)	.....	.....	.....	.....	AEK1002
⚠	Fu4 Fuse (T4A/250)	.....	.....	AEK-514	.....	.....
⚠	Fu1,Fu4 Fuse (4A)	.....	.....	.....	AEK-125	.....
⚠	Fu2,Fu3 Fuse (T400mA/250V)	AEK-407	AEK-407	AEK-504	.....	.....
⚠	Fu2,Fu3 Fuse (500mA)	.....	.....	.....	AEK-136	AEK-136
	Strain relief	AEC-882	AEC-882	AEC-882	AEC-882	AEP-113
⚠	AC socket (OUTLETS 3P)	.....	.....	.....	AKP-515	AKP-515
⚠	S2 Linevoltage Selector (110V/120-127V/220V/240V)	.....	.....	.....	AKX-507	.....
	Packing case	AHD1240	AHD1240	AHD1240	AHD1307	AHD1240
	Operating instructions (German)	ARC1047	.....	.....	.....	.....
	Operating instructions (Spanish)	.....	.....	.....	ARC1065	.....
	Operating instructions (English)	.....	.....	ARB1090	ARB1090	ARB1091
	Operating instructions (English/German/French/Italian)	.....	ARE1064	.....	.....	.....
⚠	T1 Power transformer (220/240V)	ATS1087	ATS1087	ATS1087	.....	.....
⚠	T1 Power transformer (120V)	.....	.....	.....	.....	ATS1107
	T1 Power transformer (110V/120-127V/220V/240V)	.....	.....	.....	ATS1089	.....
⚠	T2 Power transformer (220/240V)	ATS1088	ATS1088	ATS1088	.....	.....
	T2 Power transformer (110V/120-127V/220V/240V)	.....	.....	.....	ATS1090	.....
⚠	T2 Power transformer (120V)	.....	.....	.....	.....	ATS1108
	C4,C5 Ceramic capacitor	CCDSL101K500	.....	.....	.....	.....
	C1,C2,C6 Ceramic capacitor	CKDTB472K50	.....	.....	.....	.....
	Spacer (For packing)	.....	.....	.....	AHB1006	.....
	Screw	ABA1047	ABA-298	ABA-298	ABA-298	ABA-298

The assembly marked with an asterisk (*) consist of parts of different numbers but are configured in the same manner.

www.manualscenter.com

2. ELECTRICAL PARTS LIST

NOTES:

- *Parts without part number cannot be supplied.*
- *Parts marked by "◉" are not always kept in stock. Their delivery time may be longer than usual or they may be unavailable.*
- *The ⚠ mark found on some component parts indicates the importance of the safety factor of the part. Therefore, when replacing, be sure to use parts of identical designation.*
- *When ordering resistors, first convert resistance values into code form as shown in the following examples.*

Ex. 1 *When there are 2 effective digits (any digit apart from 0), such as 560 ohm and 47k ohm (tolerance is shown by J = 5%, and K = 10%).*

560Ω	*56 × 10¹*	*561*	*RD1/4PS 5 6 1 J*
47kΩ	*47 × 10³*	*473*	*RD1/4PS 4 7 3 J*
0.5Ω	*0R5*		*RN2H 0 R 5 K*
1Ω	*010*		*RS1P 0 1 0 K*

Ex. 2 *When there are 3 effective digits (such as in high precision metal film resistors).*

5.62kΩ	*562 × 10¹*	*5621*	*RN1/4SR 5 6 2 1 F*

Power AMP Assembly AWZ1487 (For HE and HB types), AWZ1670 (For SD/G and KUC types)

SEMICONDUCTORS

Mark	Symbol & Description	Part No.
	IC101,IC102	PA0016
	Q143	2SA1115
	Q117,Q118,Q131,Q132,Q125, Q126	2SA1145
	Q135,Q136	2SA968
	Q113-Q116,Q123,Q124	2SA992
	Q103-Q112,Q137,Q138, Q121,Q122	2SC1845
	Q145	2SC2235
	Q133,Q134	2SC2238
	Q139-Q142,Q144	2SC2603
	Q119,Q120,Q127-Q130	2SC2705
	Q101,Q102	2SK389
	D131	RD12ESB
	D133-D136	RD3.9EB
	D127-D130	1SS131
	D137-D140	10E2FD
	D101-D126	11E2

CAPACITORS

Mark	Symbol & Description	Part No.
	C109-C112	CMA150J500
	C101,C102	CMA221J500
	C113,C114	CKCYB561K50
	C123,C124	CMA151J500
	C119-C122	CMA680J500
	C129,C130	CEANP010M50
	C135	CEASR47M100
	C134	CEAS221M16
	C131,C137,C138,C132	CEAS471M6
	C107,C108	CEXA471M50
	C103,C104	CFTXA473J50
	C105,C106	CQMXA102J100
	C133	CKCYF103Z50
	C143-C146	CMA470J500
	C147-C150	CKDYB102K50
	C115-C118	CMA101J500
	C151-C154	CEAS010M100

RESISTORS

Mark	Symbol & Description	Part No.
⚠	R227-R230 (0.33Ω × 2/5W)	ACN-139
	R107-R110,R131-R134	RD1/2PM□□□J
⚠	R147,R148,R151,R152, R165-R168,R171-R178, R183-R194,R207-R210, R217	RD1/4PMF□□□J
	R113-R116	RDR1/2PM□□□J
	R101-R104,R223	RDR1/4PM□□□J
⚠	R125-R128,R139-R142, R149,R150,R153-R156, R179-R182,R195-R202	RFA1/4PS□□□J
	R138,R218,R220-R222,R231, R233	RD1/8PM□□□J
	Other resistors	RD1/4PM□□□J

be unavail-

efore, when

own by J =

Part No.
CEXA471M50
CFTXA473J50
CQMXA102J100
CKCYF103Z50
CMA470J500
CKDYB102K50
CMA101J500
CEAS010M100

Part No.
ACN−139
RD1/2PM□□□J
RD1/4PMF□□□J
RDR1/2PM□□□J
RDR1/4PM□□□J
RFA1/4PS□□□J
RD1/8PM□□□J
RD1/4PM□□□J

Phono AMP Assembly
AWZ1488 (For HE and HB types), AWZ1695 (For SD/G and KUC types)

SEMICONDUCTORS

Mark	Symbol & Description	Part No.
	IC501,IC502	M5220P
	IC503	M5F78M24L
	IC504	M5F79M24L
	Q505−Q510	2SC1845
	Q501−Q504	2SK369
	Q511−Q514	2SC3327
	D503,D504	11E2
	D505,D506	1SS131
	D507−D510	MA859

SWITCH

Mark	Symbol & Description	Part No.
	S501 Remote slide switch (PHONO SELECTOR)	ASU1008

CAPACITORS

Mark	Symbol & Description	Part No.
	C535,C536	CCCSL221J50
	C531,C532	CCCSL271J50
	C505,C506	CCDSL221J50
	C521,C522	CEXA220M25
	C511,C512,C526	CEXA221M25
	C509,C510	CEXA470M25
	C525	CEXA471M25
	C519,C520	CFTXA563J50 (For HE and HB types)
		CFTXA224J50 (For SD/G and KUC types)
	C515,C516	CQPXA333J2A
	C517,C518	CFTXA224J50 (For HE and HB types)
		CFTXA684J50 (For SD/G and KUC types)
	C507,C508	CQSA821J50
	C533,C534	CKCYB331K50
	C545,C546	CEAS470M10
	C527,C528	CEXA220M50
	C529,C530	CFTXA103J50
	C537−C540	CKCYF103Z50
	C513,C514	CQPXA224J2A

RESISTORS

Mark	Symbol & Description	Part No.
	R501−R504,R507,R508, R527−R544	RDR1/4PM□□□J
	R563−R566, R568,R569	RD1/8PM□□□J
	Other resistors	RD1/4PM□□□J

OTHERS

Mark	Symbol & Description	Part No.
	1P pin jack (PHONO:RED)	AKB1027
	1P pin jack (PHONO:WHITE)	AKB1028

Input Selector Assembly

SWITCHES

Mark	Symbol & Description	Part No.
	S702 Remote slide switch (REC SELECTOR)	ASU1002
	S701 Remote slide switch (FUNCTION SELECTOR)	ASU1006

RESISTORS

Mark	Symbol & Description	Part No.
	R707−R710,R713−R716	RD1/4PM□□□J
	R711,R712	RDR1/4PM221J

OTHERS

Mark	Symbol & Description	Part No.
	4P pin jack (DAT/TAPE1,TAPE2 PLAY)	AKB1007
	6P pin jack (CD,TUNER,LINE)	AKB1029

REC Out Assembly

CAPACITORS

Mark	Symbol & Description	Part No.
	C813,C814	CKMYB221K50

RESISTORS

Mark	Symbol & Description	Part No.
	R803−R808,R811,R812	RD1/4PM□□□J

OTHERS

Mark	Symbol & Description	Part No.
	4P pin jack (DAT/TAPE1 REC, TAPE2 REC,ADPT1/TAPE3 REC,ADPT1/TAPE3 PLAY)	AKB1009

Main Volume Assembly

SWITCH

Mark	Symbol & Description	Part No.
	S801 Push switch (DIRECT)	ASG1018

RESISTORS

Mark	Symbol & Description	Part No.
	VR801 Variable resistors (60kΩ×2:VOLUME)	ACW1003
	R801,R802	RDR1/4PM272J

Power Supply Assembly

SEMICONDUCTORS

Mark	Symbol & Description	Part No.
	IC601	M5F78M24L
	IC602	M5F79M24L
	Q603	2SA1145
	Q602	2SA992
	Q601	2SC2705
	D617	RD30ESB2
	D607	RD5.1EB
	D603−D606,D608,D616	S5566
	D609−D611,D601,D602	1SS131
	D612−D615	30DF2FC−2

COILS

Mark	Symbol & Description	Part No.
	L601−L604 Inductor (10mH)	LTA103J

CAPACITORS

Mark	Symbol & Description	Part No.
⚠	C617,C618 (0.01μF/AC400V) (UL.CSA AC125V)	ACG1003
⚠	C615,C616 (0.01μF/AC150V)	ACG1005
	C607,C608	CEAS010M50
	C619,C620	CEAS100M50
	C610	CEAS101M50
	C611	CEAS3R3M50
	C605,C606	CEXA471M50
	C609	CKCYB471K50
	C601−C603	CEAS470M50
	C604	CEHAQ101M50

RESISTORS

Mark	Symbol & Description	Part No.
⚠	R605,R606,R619,R620	RD1/4PMFL220J
⚠	R608	RS1LMF102J
⚠	R611	RS1PMF103J
⚠	R601,R602	RS1PMF391J
⚠	R603,R604	RS2LMF182J
	Other resistors	RD1/4PM□□□J

Speaker Terminal Assembly

RELAIES

Mark	Symbol & Description	Part No.
	RY901,RY902 Relay (SPEAKER PROTECTION)	ASR−106
	RY903 Relay (HEADPHONE PROTECTION)	ASR1014

COILS

Mark	Symbol & Description	Part No.
	L901,L902 AF choke coil (0.7μH)	ATH1011

CAPACITORS

Mark	Symbol & Description	Part No.
	C901−C904	CFTXA104J50

RESISTORS

Mark	Symbol & Description	Part No.
⚠	R901,R902	RS1LMF100J
⚠	R905,R906	RS1PMF681J
⚠	R907,R908	RS2LMF100J
⚠	R903,R904	RS2LMF331J

OTHERS

Mark	Symbol & Description	Part No.
	Terminal 4P (SPEAKERS)	AKE1006

Headphone Assembly

OTHERS

Mark	Symbol & Description	Part No.
	Headphone jack (PHONES)	AKN1002

PION-01886 / DRUCK 22

3. SCHEMATIC DIAGRAM

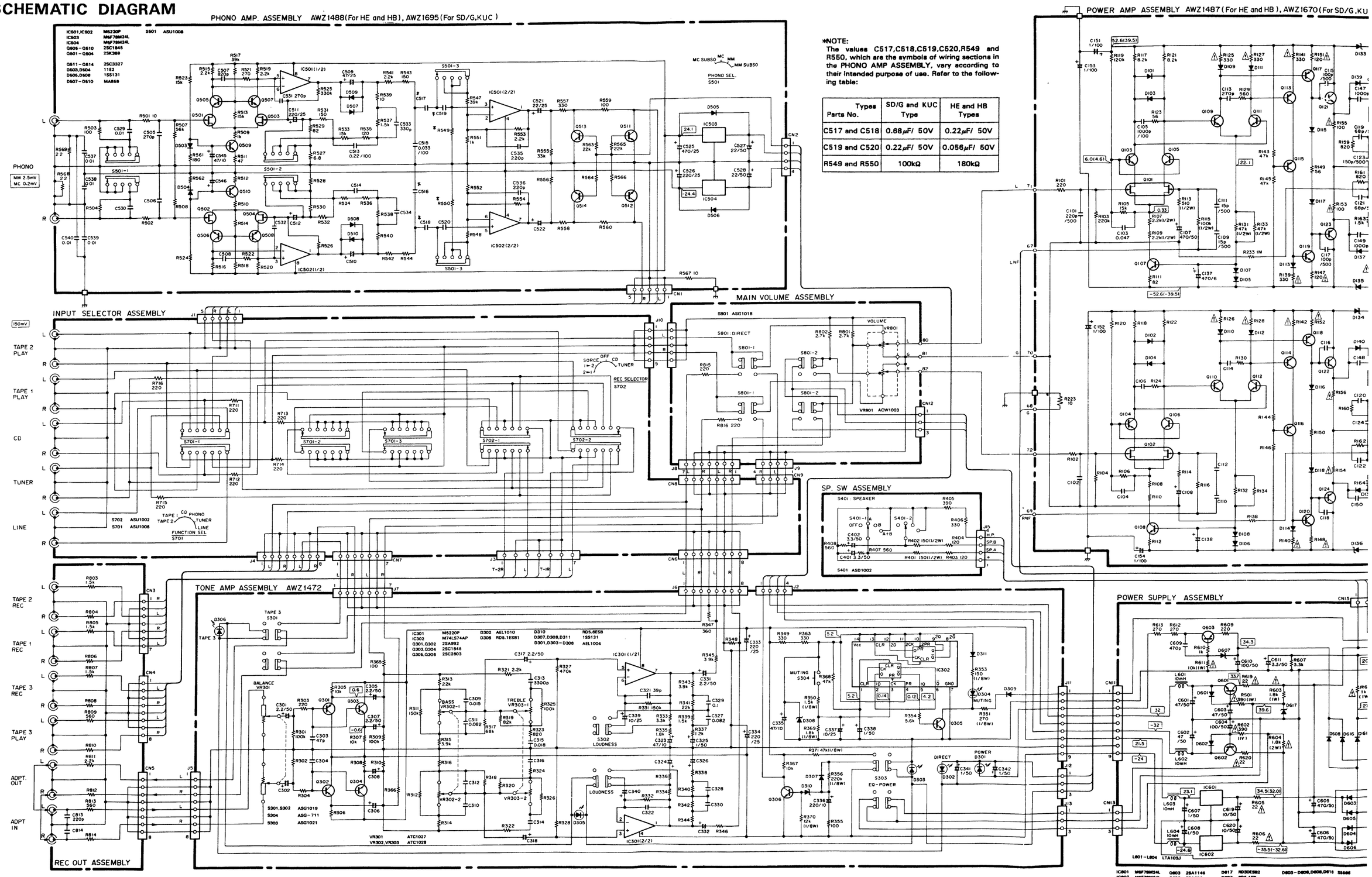

*NOTE:
The values C517,C518,C519,C520,R549 and R550, which are the symbols of wiring sections in the PHONO AMP ASSEMBLY, vary according to their intended purpose of use. Refer to the following table:

Types / Parts No.	SD/G and KUC Type	HE and HB Types
C517 and C518	0.68μF/ 50V	0.22μF/ 50V
C519 and C520	0.22μF/ 50V	0.056μF/ 50V
R549 and R550	100kΩ	180kΩ

www.manualscenter.com

PION-01886 / DRUCK 23

(For HE and HB), AWZ1670 (For SD/G, KUC)

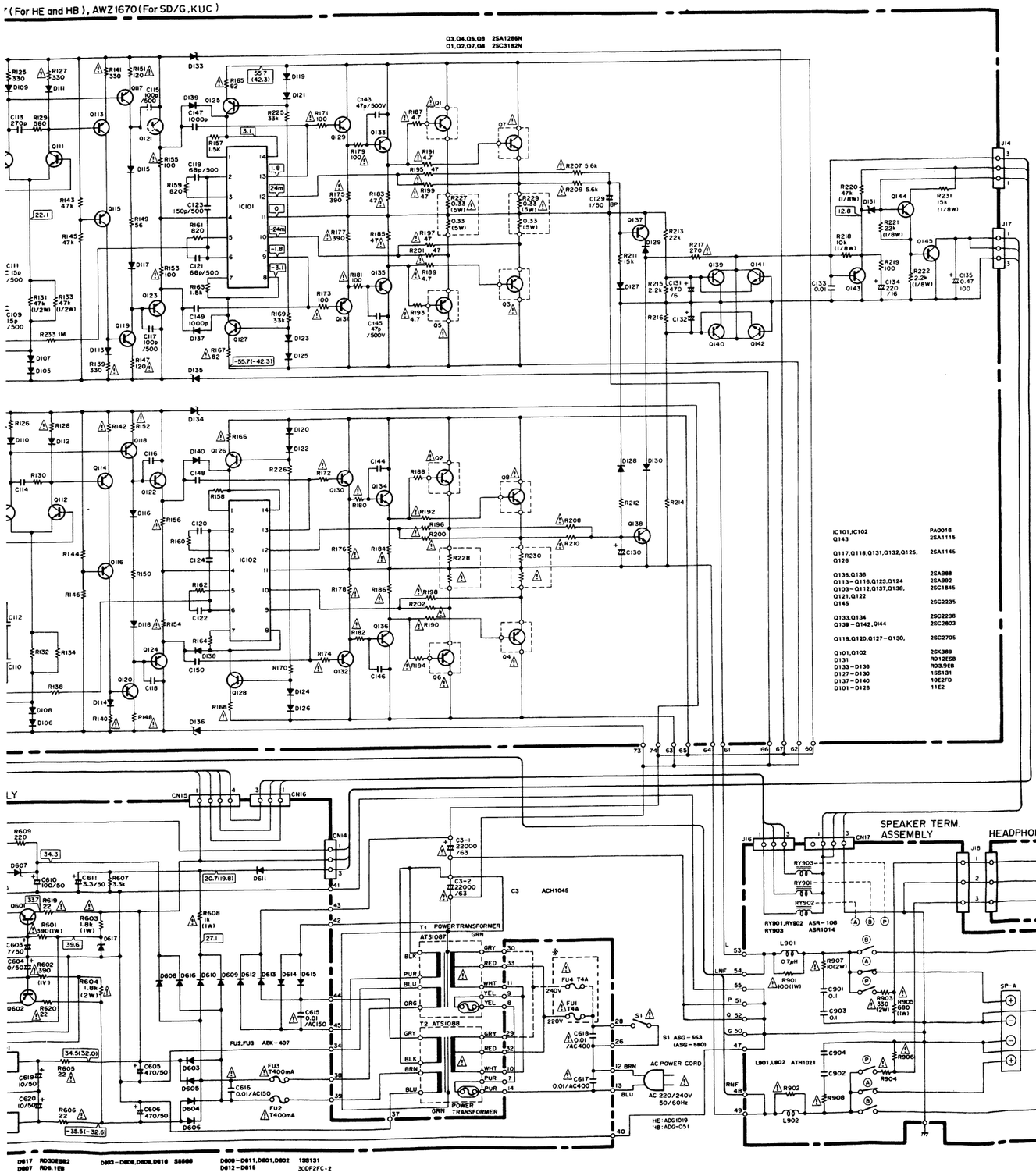

1 RESISTORS:
Indicated in Ω, ¼W, ½W, ±5% tolerance unless otherwise noted k: kΩ, M: MΩ, (F): ±1%, (G): ±2%, (K): ±10% (M): ±20% tolerance

2 CAPACITORS:
Indicated in capacity (μF)/voltage (V) unless otherwise noted p: pF
Indication without voltage is 50V except electrolytic capacitor

3 VOLTAGE, CURRENT:
: Signal voltage at (130W+130W 4Ω) out (1KHz)
: DC voltage (V) at no input signal
Value in ( ) is DC voltage at rated power
⇦ mA: DC current at no input signal

4 OTHERS:
➡ Signal route
The ⚠ mark found on some component parts indicates the importance of the safety factor of the part. Therefore, when replacing, be sure to use parts of identical designation

5. SWITCHES

TONE AMP ASSEMBLY
S301: TAPE 3 (ON-OFF)
S302: LOUDNESS (ON-OFF)
S303: EQ. POWER (ON-OFF)
S304: MUTING (ON-OFF)

SPEAKER SWITCH ASSEMBLY
S401: SPEAKERS A, B (OFF-A-B-A+B)

PHONO AMP ASSEMBLY
S501: PHONO SEL. (MC-MM-MM)

INPUT SELECTOR ASSEMBLY
S701: FUNCTION SEL. (TA2-TA1-CD-PHONO-TUNER-LINE)
S702: REC. SEL. (2→1-1→2-SOURCE-OFF-CD-TUNER

MAIN VOLUME ASSEMBLY
S801: DIRECT (ON-OFF)
S1 : POWER (ON-OFF)

The underlined indication the switch position

※Fuses enclosed in: [ ]
Fu 1 and Fu 4 are not used simultaneously but alternately depending on the line voltage applied in the particular zone where the system is used as shown in the following chart:

Line voltage	Fu 1	Fu 4
220V	Used	Not used
240V	Not used	Used

FOR KUC TYPE

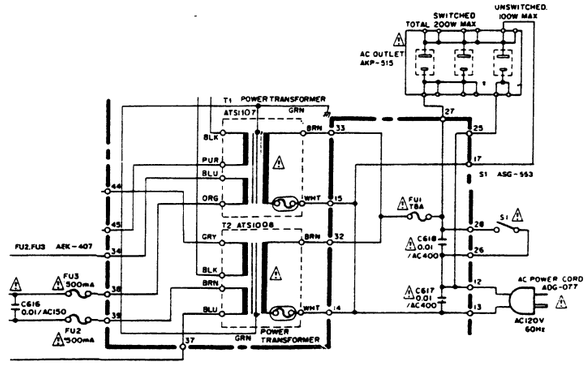

FOR SD/G TYPE

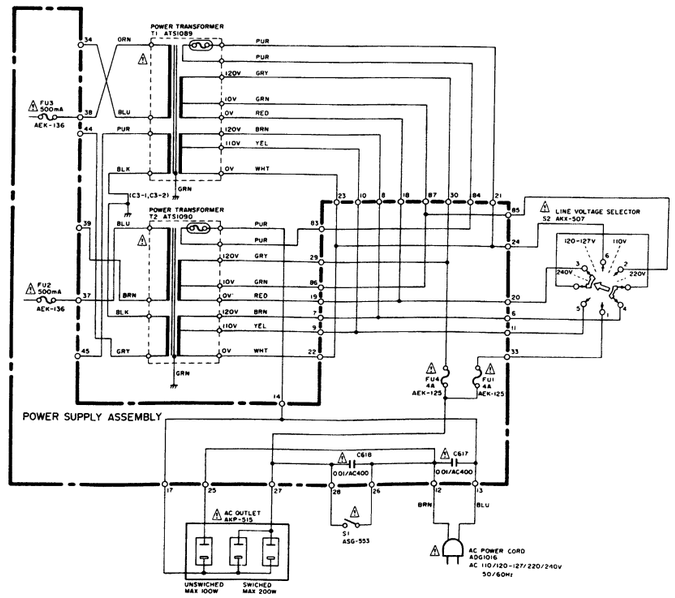

www.manualscenter.com

4. P.C. BOARD PATTERNS

POWER AMP ASSEMBLY (AWZ1487 FOR HE AND HB, AWZ1670 FOR SD/G,KUC)

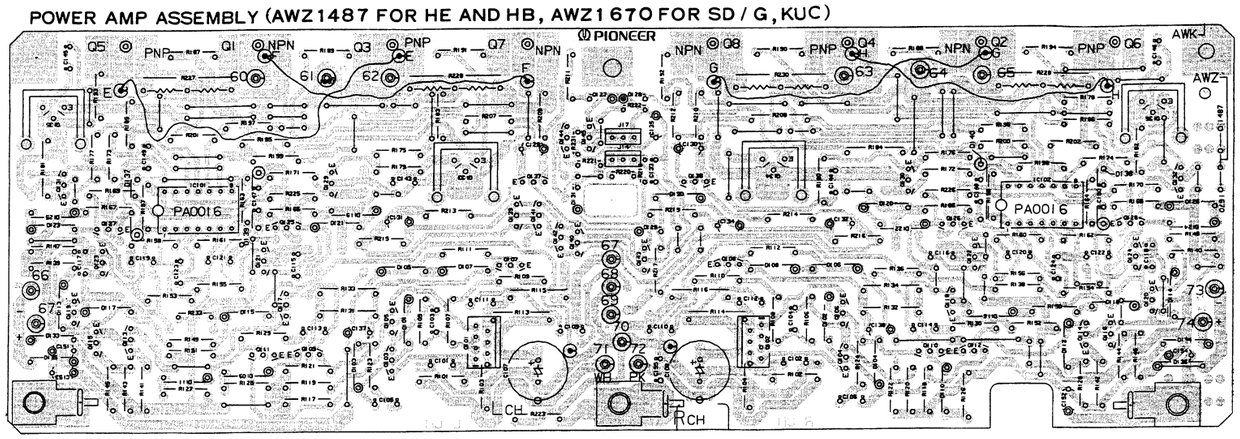

SPEAKER TERMINAL ASSEMBLY

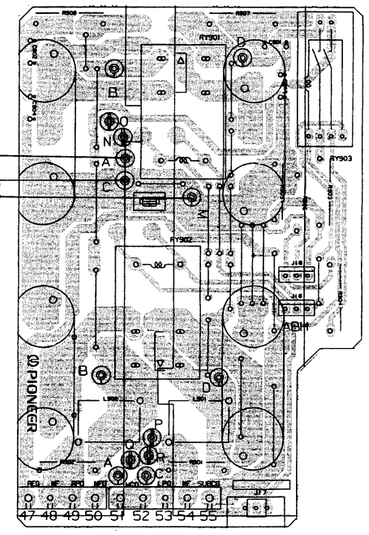

POWER AMP ASSEMBLY 68

C3 GND

NOTE

1. This P.C.B connection diagram is viewed from the parts mounted side.
2. The parts which have been mounted on the board can be replaced with those shown with the corresponding wiring symbols listed in the following Table.

P.C.B. pattern diagram indication	Corresponding part symbol	Part Name
Q504 E C B	E C B or E C B	Transistor
Q215	E C B or E C B	Radiator type transistor
D203	D203	Diode
R237	R237	Resistor
C513	C513	Capacitor (Polarity)
C518	C518	Capacitor (Non-polarity)

Others

P.C.B. pattern diagram indication	Part Name
IC	IC
S	Switch
RY	Relay
L	Coil
F	Filter
VR	Variable resistor or Semi-fixed resistor

3. The capacitor terminal marked with ⊖(double circles) shows negatine termianl.
4. The diode terminal marked with ⊖(double circles) shows cathode side.
5. The transistor terminal to which E is affixed shows the emitter.

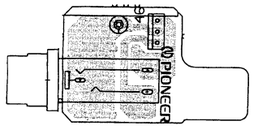

HEADPHONE ASSEMBLY

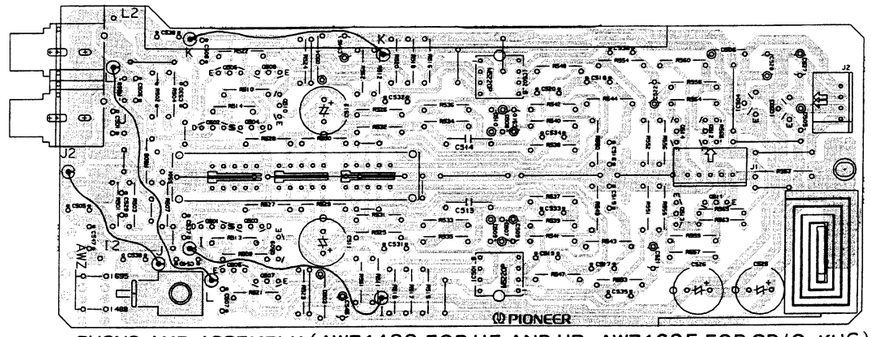

PHONO AMP ASSEMBLY (AWZ1488 FOR HE AND HB, AWZ1695 FOR SD/G,KUC)

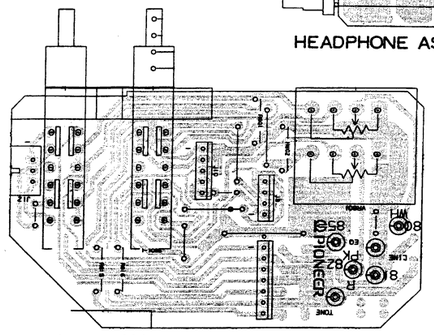

MAIN VOLUME ASSEMBLY

POWER SUPPLY ASSEMBLY

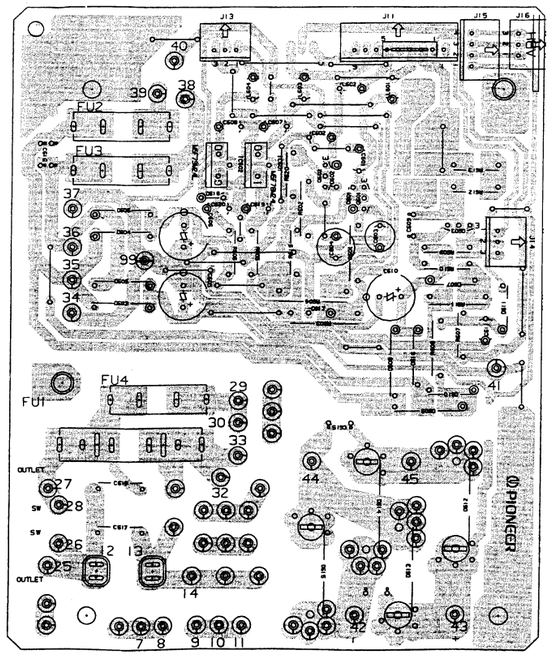

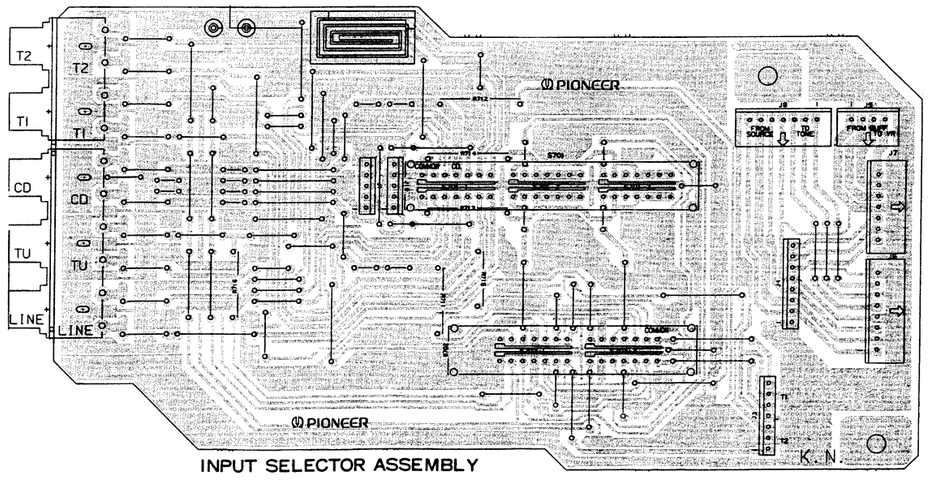

INPUT SELECTOR ASSEMBLY

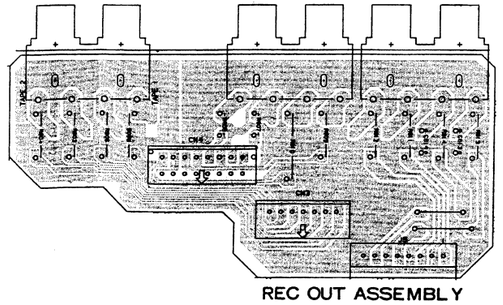

REC OUT ASSEMBLY

www.manualscenter.com

PION-01886 / DRUCK 25

www.manualscenter.com

A-717/HE,HB KUC

POWER SUPPLY ASSEMBLY

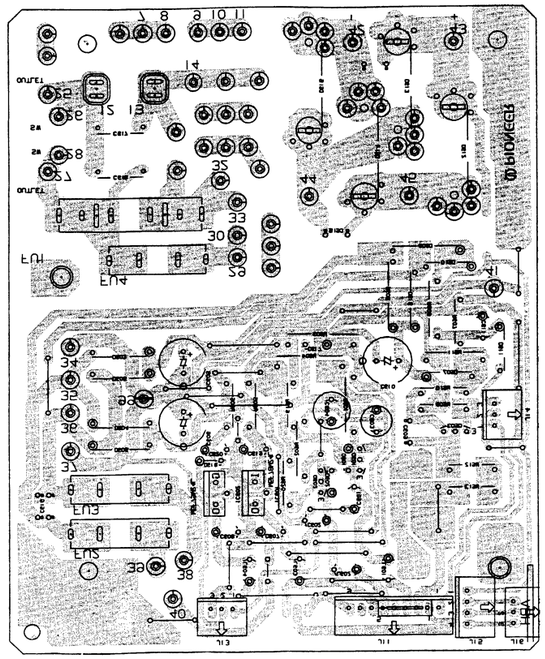

REC OUT ASSEMBLY

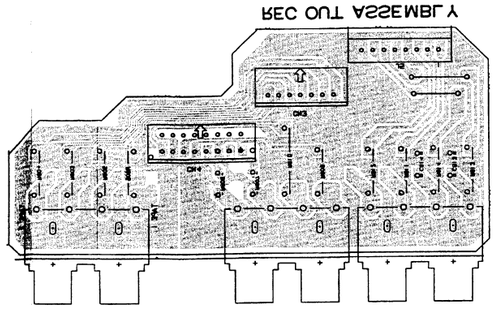

MAIN VOLUME ASSEMBLY

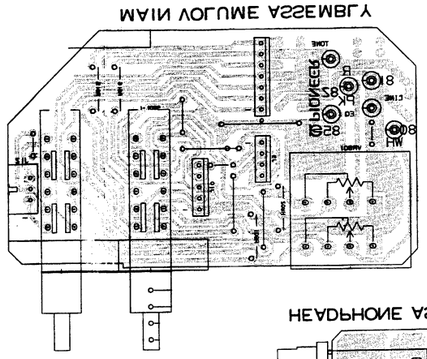

HEADPHONE ASSEMBLY

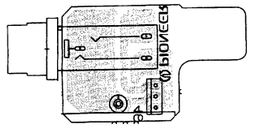

INPUT SELECTOR ASSEMBLY

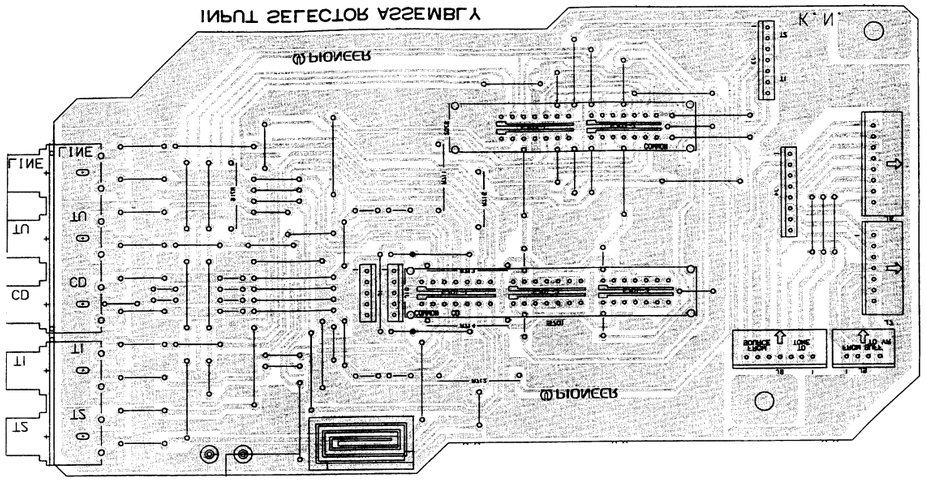

PHONO AMP ASSEMBLY (AWZ1488 FOR HE AND HB, AWZ1692 FOR SD\C,KUC)

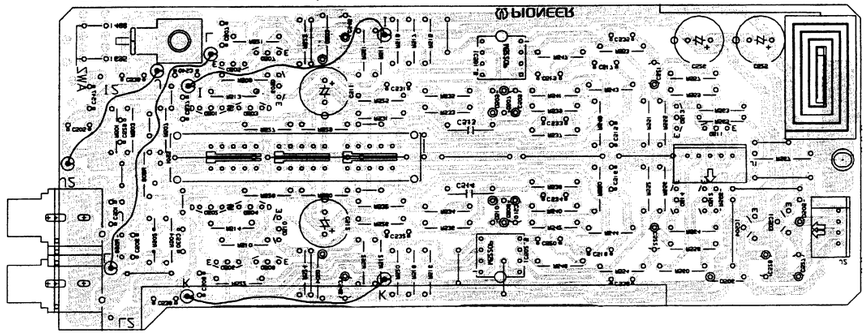

POWER AMP ASSEMBLY (AWZ1487 FOR HE AND HB, AWZ1690 FOR SD\C,KUC)

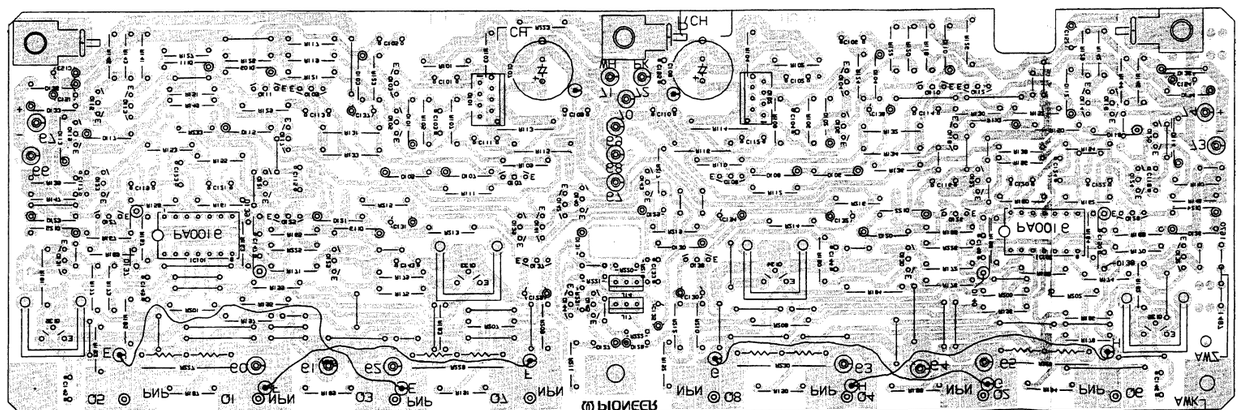

SPEAKER TERMINAL ASSEMBLY

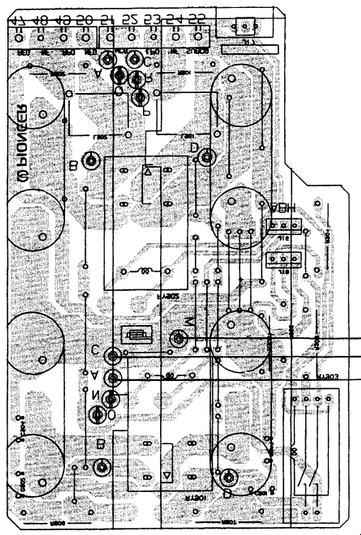

NOTE:
This picture shows the foil side of the printed circuit.