NAD SERVICE MANUAL

MONITOR SERIES

7100

RECEIVER

PAGE	CONTENTS
3	REAR / FRONT VIEW
4	SPECIFICATIONS
5	REMOTE CONTROL TRANSMITTER
6	MAIN AMPLIFIER ADJUSTMENT POINTS
7	MAIN AMPLIFIER ADJUSTMENT METHOD
7	PREAMPLIFIER ADJUSTMENT METHOD
8	SUGGESTED HOOKUP FOR FM ALIGNMENT
9-11	FM ALIGNMENT METHOD
11	AM ALIGNMENT METHOD
12	TUNER ADJUSTMENT POINTS
13-14	MAIN AMPLIFIER PCB LAYOUT
15-16	MAIN AMPLIFIER SCHEMATIC
17-18	PREAMPLIFIER PCB LAYOUT
19-20	PREAMPLIFIER SCHEMATIC
21-22	TUNER PCB LAYOUT
23-24	TUNER SCHEMATIC
25-26	REMOTE/DISPLAY PCB LAYOUT
27-28	REMOTE/DISPLAY SCHEMATIC
29	MAIN AMPLIFIER WIRING
30	PREAMPLIFIER WIRING
31	TUNER AND REMOTE/DISPLAY WIRING
32	DIFFERENT PARTS LIST
33-35	ELECTRICAL PARTS LIST
36	EXPLODED VIEW
37	EXPLODED PARTS LIST
38	PACKING DIAGRAM

FRONT PANEL

1. Power.
2. Phones.
3. Speaker Selector.
4. Bass Eq.
5. Bass.
6. Loudness Compensation.
7. Treble.
8. Tape Copy.
9. Tape 1, Tape 2 (Monitor).
10. Input Selector (Phono, Video, CD).
11. Low Level.
12. Balance.
13. Volume.
14. Pre-sets.
15. Bank Selector.
16. Memory Enter.
17. Mono.
18. AM/FM.
19. Narrow I.F.
20. Tuning Display.
21. Tuning Up/Down.
22. Search mode.

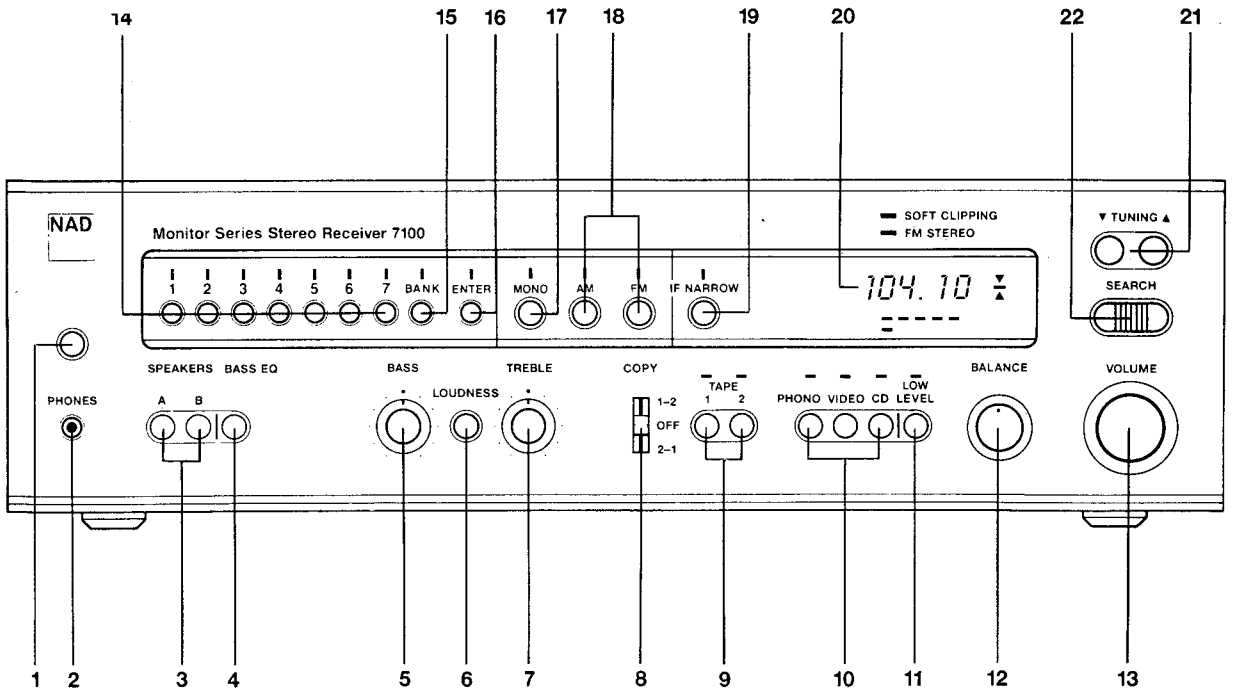

REAR PANEL

1. AC Line Cord.
2. AC Outlets
3. Speakers A.
4. Speakers B.
5. AM Rod Antenna.
6. AM Antenna Terminals.
7. FM Antenna Input.
8. Phono Ground.
9. Phono Input.
10. MM/MC Selector.
11. Infrasonic Filter.
12. CD Input.
13. Video Sound Input.
14. Tape 1 Input/Output.
15. Tape 2 Input/Output.
16. Preamp Out, Main In.
17. Soft Clipping On/Off.
18. Bridging.
19. Speaker Impedance.

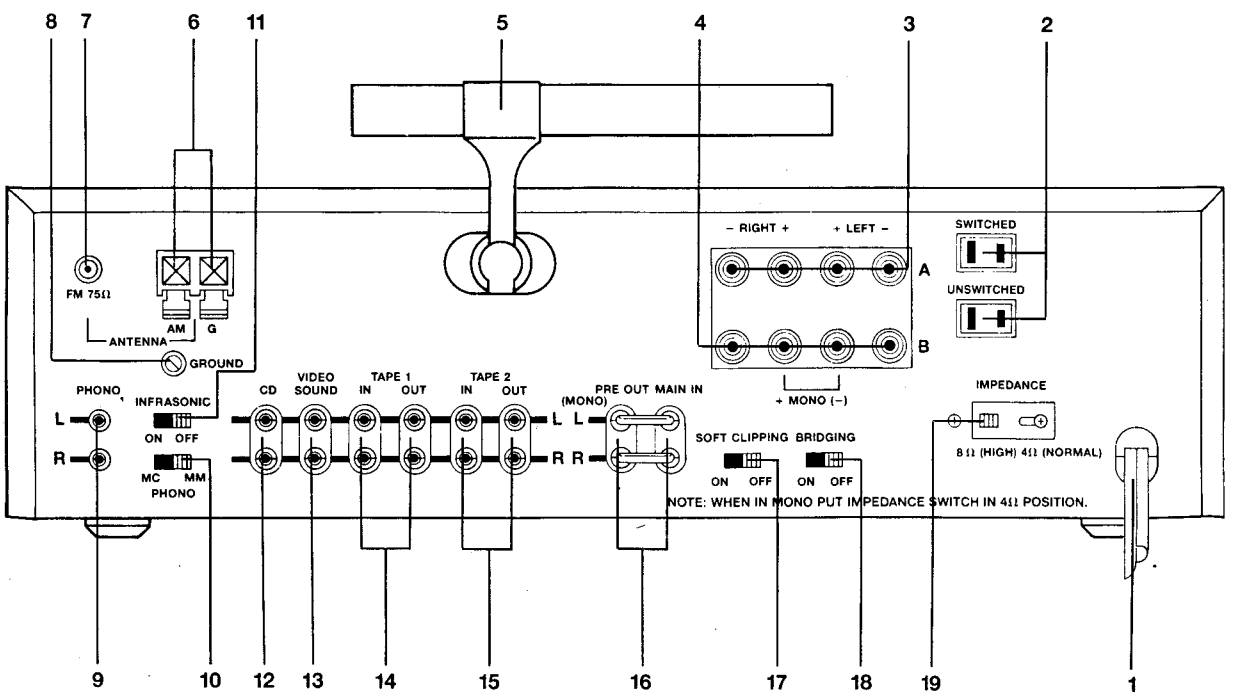

Specifications
NAD 7100 Stereo Receiver
Note: Specifications are measured in accordancae with EIA Standard RS-490 (IHF A-202) for amplifiers and ANSI-IEEE Standard 185 (1975), i.e. IHF T-200, for tuners. Tuner sensitivity is measured via 75-ohm coaxial input. Ampllifier measurements referred to 8 ohm are taken with the Speaker lmpedance selector set to 8 ohm (High). Measurements for 4 and 2 ohm are taken with lmpedance selector at 4 ohm (Normal).

Power Amplifier Section		
CONTINUOUS AVERAGE POWER		
OUTPUT AT 8 OHM (minimum RMS power per channel, both channels driven, with no more than the rated distortion)		50 W(17 dBW)
Rated distortion (THD), 20 Hz - 20 kHz		0.03%
Clipping power, 1 kHz (maximum continuous power per channel)		70 W
Dynamic Headroom at 8 ohm		+6 dB
Dynamic power (maximum short-term power per channel)	8 ohm	200 W
	4 ohm	250 W
	2 ohm	330 W
Damping factor		100
Slew factor		>50
Slew rate		35V/usec
T.H.D. and SMPTE I.M. distortion from 250 mW to rated output		<0.03%
IHF I.M. (CCIF IM) and T.I.M. distortion at rated output		<0.03%
Input impedance		10 kohm/600pF
Input sensitivity for 1 Watt/50 Watts out		120 mV/850mV
Power amp gain		27 dB
Preamplifier Section		
Phono Input		
Input Impedance MM + MC		R=47 kohm, C=100 pF
Input Sensitivity (1 kHz)	MM/MC	.35/.025mV for 1W out
	MM/MC	2.5/.18mV for 50W out
Signal-to-Noise Ratio with cartridge connected, A-weighted	MM	75 dB re 5 mV
	MC	75 dB re 0.5mV
Input Overload at 20 Hz/1kHz/20kHz	MM	20/180/1500 mV
	MC	1.4/13/100 mV
RIAA Accuracy		±0.5 dB
High-Level Inputs (CD, Video, Tape)		
Input Impedance		R=50 kohm, C=500 pF
Input Sensitivity		20 mV for 1W out
		150 mV for 50W out
Signal-to-Noise ratio, A-weighted		94 dB re 1 W out
		111 dB re 50 W out
Input Overload		>10V
Frequency Response		20Hz-20kHz ± 0.5dB
Outputs		
Preamp output impedance		600 ohm
Tape output impedance		100 ohm
Controls		
Treble		±9 dB at 10kHz
Bass		±10 dB at 50 Hz
Bass Equalization		±3 dB at 55 Hz
		+6 dB at 36 Hz
Infrasonic Filter		-3 dB at 12 HZ
		12 dB/octave
Low Level (audio muting)		-20 dB

FM Tuner Section		
Input sensitivity		
Mono,-30 dB THD+N		11 dBf(1.0uV into 75 ohm)
Mono, 50 dB S/N		14 dBf(1.4uV into 75 ohm)
Stereo,50 dB S/N		26 dBf (5.5 uV)
Stereo, 60 dB S/N		37 dBf (20 uV)
Capture ratio (at 45 and 85 dBf)		<1.6 dB
AM rejection (at 45 and 85 dBf)		>60 dB
Selectivity,alternate channel		70 dB,IF normal
		80 dB,IF narrow
Image rejection		>80 dB
R.F. intermodulation		>60 dB
I.F. rejection		>120 dB
SCA rejection		70 dB
Subcarrier suppression(19, 38 kHz)		65 dB
THD at 100% modulation	Mono, 1 kHz	0.1%
	Narrow IF	0.5%
	100Hz-6kHz	0.2%
	Stereo, 1 kHz	0.1%
	Narrow IF	0.5%
	100Hz-6kHz	0.3%
Signal-to-noise ratio	Mono	83 dB
IHF weighted, 65 dBf	Stereo	77 dB
Frequency reponse, 30Hz-15 kHz		±0.5 dB
Stereo separation	1 kHz	50 dB
	30Hz-10kHz	35 dB
AM Tuner Section		
Usable sensitivity		300 uV/meter
THD		0.5%
Selectivity		35 dB
Image rejection		50 dB
I.F. rejection		35 dB
S/N ratio(30% mod., 50mV input)		45 dB
Physical Specifications		
Width x Height x Depth		43.5 x 11 x 40 cm.
		17.1 x 4.25 x 15.5 in.
Net Weight		11 kg (24.4 lbs)
Shipping Weight		12.7 kg (28.2 lbs)
Power Consumption		50/60 Hz at 110,120, 220, or 240 VAC
		220 VA

All specifications for A, A1 model (US-type, 75 uSec) ; others may vary.

REMOTE CONTROL TRANSMITTER

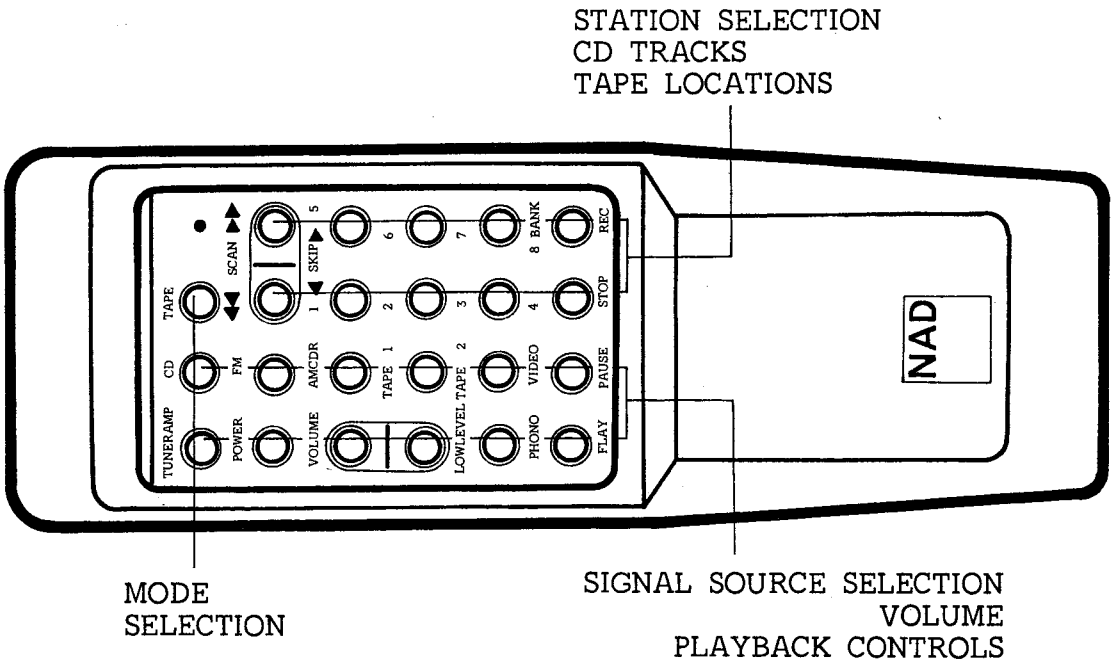

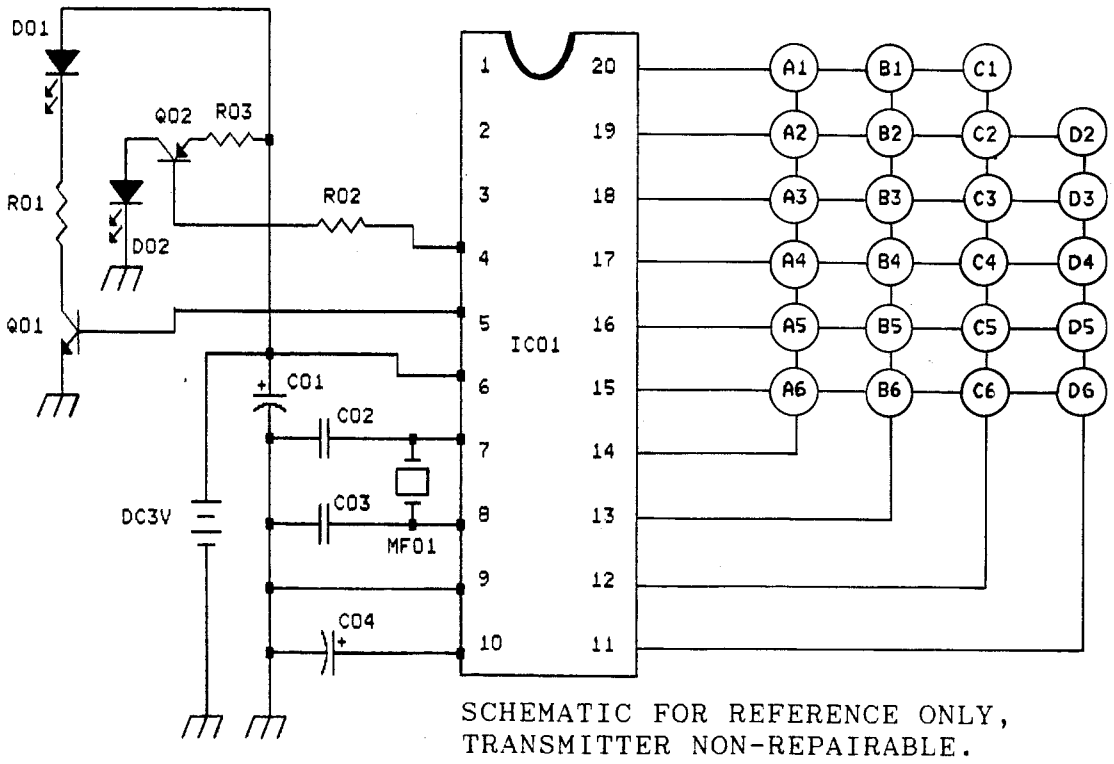

SCHEMATIC FOR REFERENCE ONLY,
TRANSMITTER NON-REPAIRABLE.

MAIN AMPLIFIER ADJUSTMENT POINTS

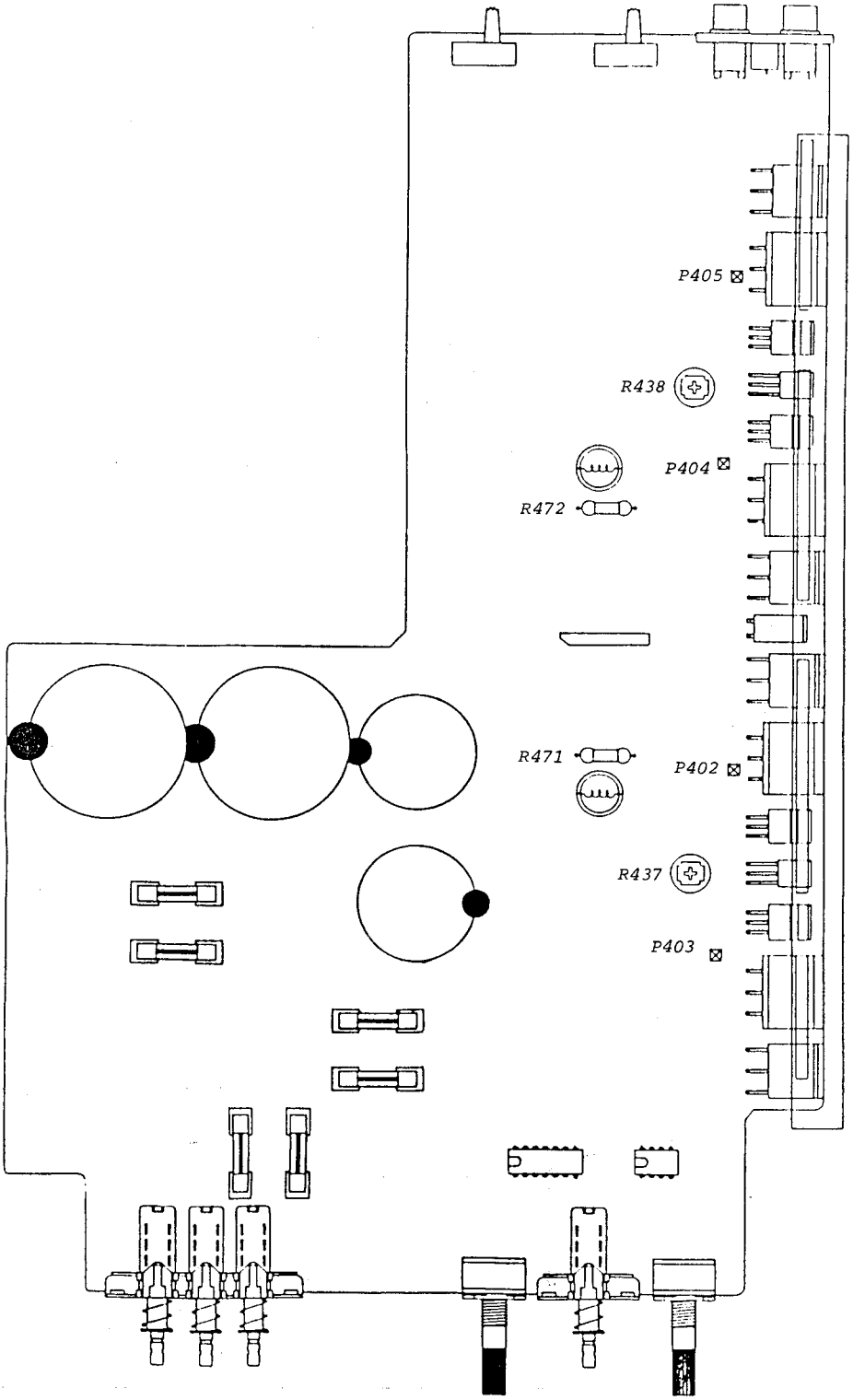

MAIN AMPLIFIER ADJUSTMENT

IMPORTANT NOTES:

1) Before adjusting, remove input signal and load, and set Speaker impedance switch to 8 ohms (reset to 4 ohms when finished).
2) These adjustments are always necessary after repair to main amplifier.
3) After repair, it is recommended to use current limiter (70-100W lightbulb) in mains line, for initial turn-on.

A. CENTER VOLTAGE CHECK

1. Connect DMM between Ground and R-471 (L channel)(R-472, R channel)(amplifier output).
2. Turn on, and read voltage. Specification 0V ± 100mVDC.

B. IDLE CURRENT ADJUSTMENT

1. Connect DMM across P-402(+) and P-403(-), and adjust R-437 for reading of 15mV ± 2.5mVDC.
2. Repeat, using P-404(+) and P-405(-), adjust R-438.

C. FINAL ADJUSTMENT

1. Leave power on minimum 5 minutes.
2. Repeat center voltage check and idle current adjustments.

PREAMPLIFIER ADJUSTMENT

A. CHANNEL BALANCE

1. Feed 1kHz, 100mV to CD input; connect AC VTVM's to preamp output.
2. Set volume to maximum, balance to center, low level off.
3. Adjust R-315 so that both channels have same output level ± 0.25dB.

PREAMPLIFIER ADJUSTMENT POINTS

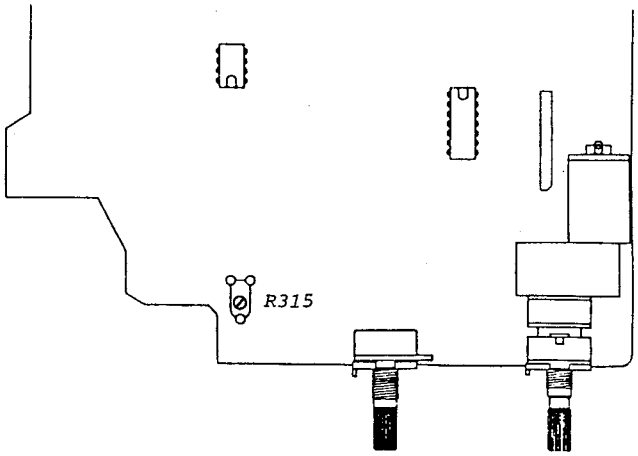

SUGGESTED INSTRUMENTATION HOOKUP- FM ALIGNMENT

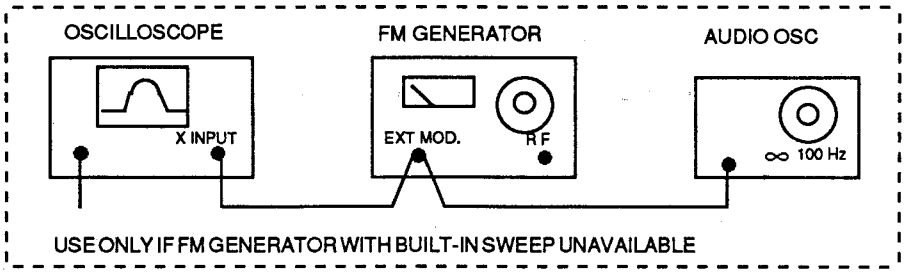

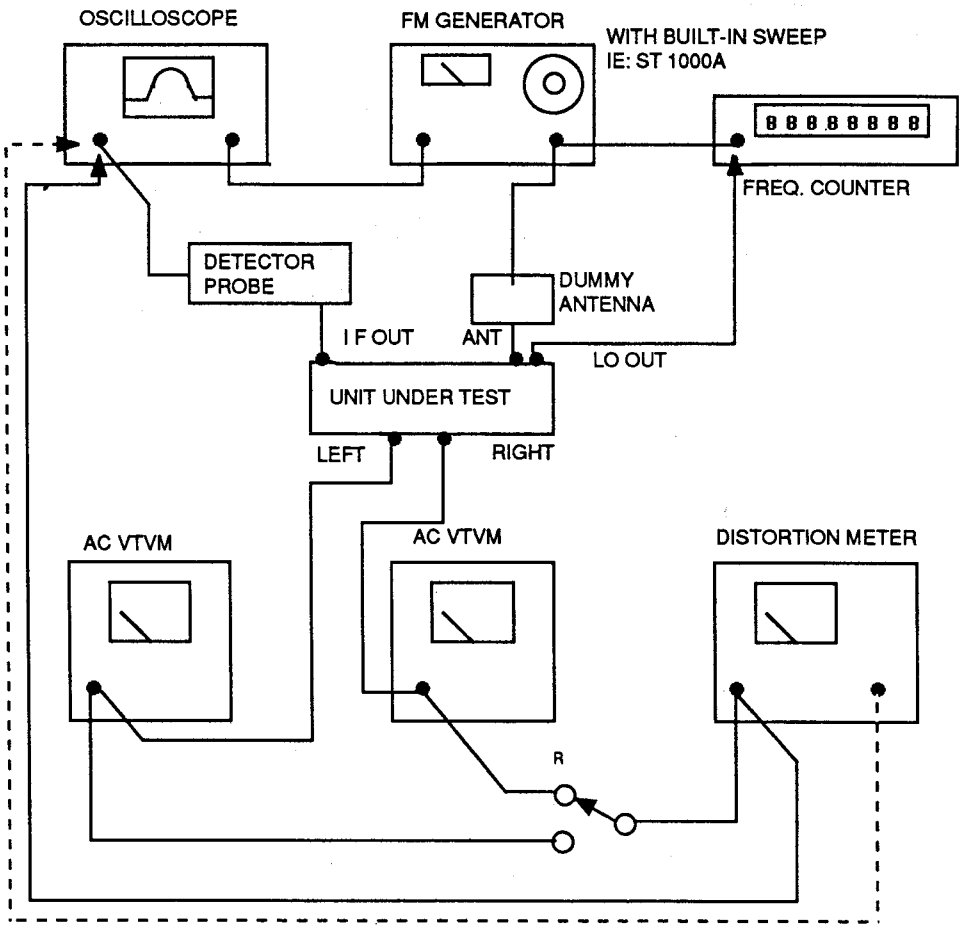

DETECTOR PROBE

SCHEMATIC DIAGRAM

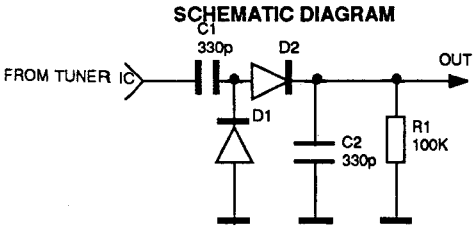

PICTORIAL DIAGRAM

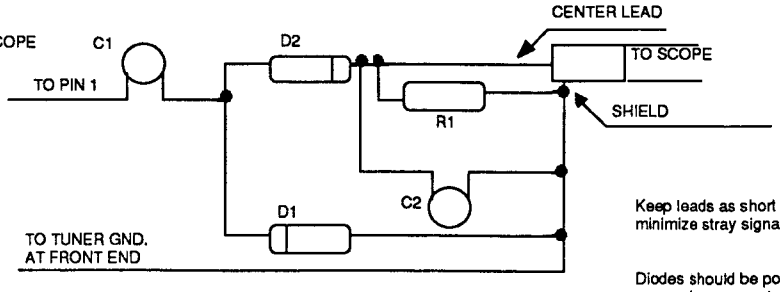

Keep leads as short as possible, to minimize stray signal pickup.

Diodes should be point-contact germanium: some types commonly available are: OA80, OA81, AA119, 1N60, 1N34, 1N22

INDUCTOR TEST PROBE

THIN BRASS, 2x10 mm approx

2.5mm APPROX WOOD OR PLASTIC

FERRITE 2-3 mm DIA

BRASS, FERRITE FROM RF COIL. FASTEN WITH GLUE.

FM ALIGNMENT

NECESSARY INSTRUMENTATION:

* Stereo Modulator (less than 0.05% THD, more than 50dB Sep.)
* FM Generator (less than 0.05% THD)
* 75 ohm Dummy Antenna (if needed by generator)
* Audio Oscillator (not necessary if FM generator has built-in sweep, e.g., SOUND TECHNOLOGY ST 1000A or ST 1020A)
* 2 AC VTVM's (or one with a Left/Right switch)
* THD Analyzer (resolution less than 0.1%)
* Oscilloscope (5mV or better sensitivity, X-Y capability)
* Frequency Counter
* Diode Detector Probe
* Ferrite/Brass inductor test probe

IMPORTANT NOTES

1) RF levels are at antenna input.
2) Before aligning, select FM, switch off IF NARROW and MONO.
3) If FM Generator is not synthesizer-type, be sure to check its frequency with Frequency Counter When adjusting detector and stereo decoder circuits.
4) Hum in measurements may be caused by ground loop via antenna cable; if so, use isolation balun, or isolate cable shield and hot with small capacitors (470 ~ 1000pf).
5) To adjust front-end coils, bend gently with wooden or plastic tool (non-interactive).
6) ENTER the following frequencies: 90.00, 105.00, 87.50, 108.00, 98.00

A. LOCAL OSCILLATOR FREQUENCY

1. Connect Frequency Counter between front-end pin 8 (front-most) and Ground.
2. Tune to 90 MHz (No RF input needed).
3. Adjust C-934 so that reading is 100.700MHz ± 2KHz.
4. Remove counter.

B. TUNING VOLTAGE

1. Connect DMM between P-936 and Ground.
2. Tune to 108.00MHz, and adjust L-7 if reading is not 20.0V ± 0.5V
3. Tune to 88.00MHz, and check that reading is 3.0V ± 0.5V
4. Repeat until within tolerance.

C. TRACKING

1. Connect FM Generator to 75 ohm antenna input (modulate ± 150kHz sweep) and Detector Probe to Pin 1 of Q106 (ground to tunershield).
2. Adjust vertical sensitivity of Oscilloscope to maximum, and set to X-Y mode. (X input is sweep signal, Y is detector probe).
3. Tune to 105MHz and adjust generator so that curve appears on Oscilloscope, and covers approximately 1/2 of display.
4. Check L2, L3, L4 with ferrite/brass probe, adjust only if probe causes curve height to increase more than 10%. If necessary, reduce generator output to keep entire curve on display.

5. Tune to 90MHz and adjust Generator so that curve appears on Oscilloscope.
6. Check L2, L3, L4 again; if necessary, distribute any error between both frequencies.

   Note: 105MHz curve is typically slightly higher than 90MHz.

D. IF ADJUSTMENTS

1. Tune to approximately 98MHz (must be an unoccupied frequency), and adjust FM Generator to display curve on the oscilloscope.
2. Adjust I-1 and I-101 for maximum and symmetrical curve using as little RF input signal as possible.
3. Remove detector probe.

E. DETECTOR ADJUSTMENT

1. Remove Detector Probe, and connect Tape Output to Distortion Analyzer and Oscilloscope.
2. Connect DMM between P-703 (-) and P-704 (+).
3. Tune to 98MHz and feed 1000uV from FM Generator (Modulate 1kHz 100%, Mono).
4. Adjust I-102 Secondary (front) for lowest THD. Specification: less than 0.1%
5. Adjust L-102 Primary (rear) for 0V ± 50mV reading on DMM.
6. Repeat until no further improvement.

F. STEREO DISTORTION & SEPARATION

1. Tune to 98MHz and feed 1000uV from FM Generator. Modulate 1kHz, 100% left (or right) only.
2. Adjust I-1 and I-101 just slightly so that distortion on left (or right) channel becomes minimum.
3. Check stereo distortion, wide IF; Specification: less than 0.1% , L + R, L only, R only, L - R.
4. Next, select IF NARROW, and check distortion; Specification: less than 2%, L only, R only, L - R.
5. Set IF to wide and modulate L only. Adjust R-176 for minimum output on right channel.
   Next, modulate R only and adjust R-176 for minimum output on left channel.
   If necessary, readjust R-176 so that readings become same on both channels. Specification: less than -45dB.
6. Select IF NARROW, and modulate left (or right) channel only. Adjust R-177 for minimum output on right (or left) channel VTVM and oscilloscope.
   If necessary, readjust R-177 so that readings become same on both channels. Specification: less than -40dB.

G. AUTO SEARCH LEVEL

1. Set IF to wide. Connect DMM between P-935 and Ground.
2. Set FM Generator output to 10uV and adjust R-144 so that reading just goes from 0 V to 4.4V. Tolerance: ± 2uV.

H. STEREO SWITCHING LEVEL

1. Set FM Generator output to 5uV, 1kHz 100% L + R.
2. Adjust R-148 so that the stereo light just turns on. Tolerance: ± 1 uV.

NOTE: The tuner will switch into mono at a lower level, typically 4uV.

I. SIGNAL METER LEVEL

1. Set FM Generator output to 500 uV
2. Adjust R-141 so that fifth LED just lights.

J. FM NR CIRCUIT, MULTIPLEX FILTERS

1. Adjust R-025 full cw.
2. Set FM Generator output to 1000uV, 1kHz 100% L + R, and set reference for S/N measurement. Cancel the stereo modulation and leave pilot tone.
3. Adjust Z-111 (Z-112)(rear slug) for minimum subcarrier output on left (right) channel; Specification: less than -60dB.
4. Reduce FM Generator output so that S/N ratio reads 50dB.(Approx 18uV)
5. Adjust R-025 so that S/N is improved by 8dB.

AM ALIGNMENTS

A. TUNING VOLTAGE

1. Connect DMM between P-936 and Ground.
2. Tune to 1600(1602)KHz. Enter into Preset 2. Adjust C-137 for reading of 8.1V ± 0.5V.
3. Tune to 520(522)kHz. Enter into Preset 1. Adjust L-102 for reading of 1.0V ± 0.1V.
4. Repeat until within tolerance.

B. ANTENNA, IF

1. Swing antenna away from chassis.
2. Connect DC voltmeter to Anode, D110 (rear) and Ground.
3. Tune to a station of moderate strength near 1400kHz. Enter into Preset 4. Adjust C-136 for maximum reading on meter.
4. Adjust I-103 and I-104 for maximum reading on meter.
5. Tune to a station of moderate strength near 600kHz. Enter into Preset 3. Adjust L-101(AM Antenna) for maximum reading on meter (use non-interactive tool, such as plastic or wooden stick).
6. Repeat until no further improvement.

C. SCAN STOP/SIGNAL METER LEVEL

1. Tune to 1000kHz and feed 200uV to antenna terminals.
2. Adjust R-165 so that fifth LED just lights fully.

TUNER ADJUSTMENT POINTS

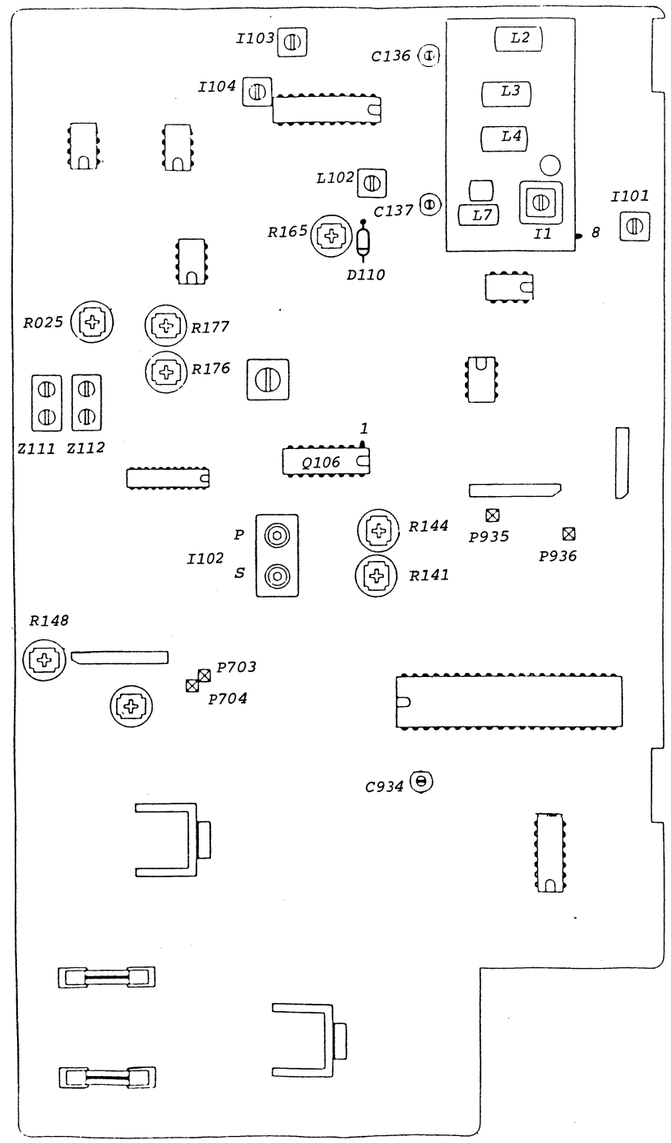

MAIN AMPLIFIER PCB LAYOUT
COMPONENT SIDE

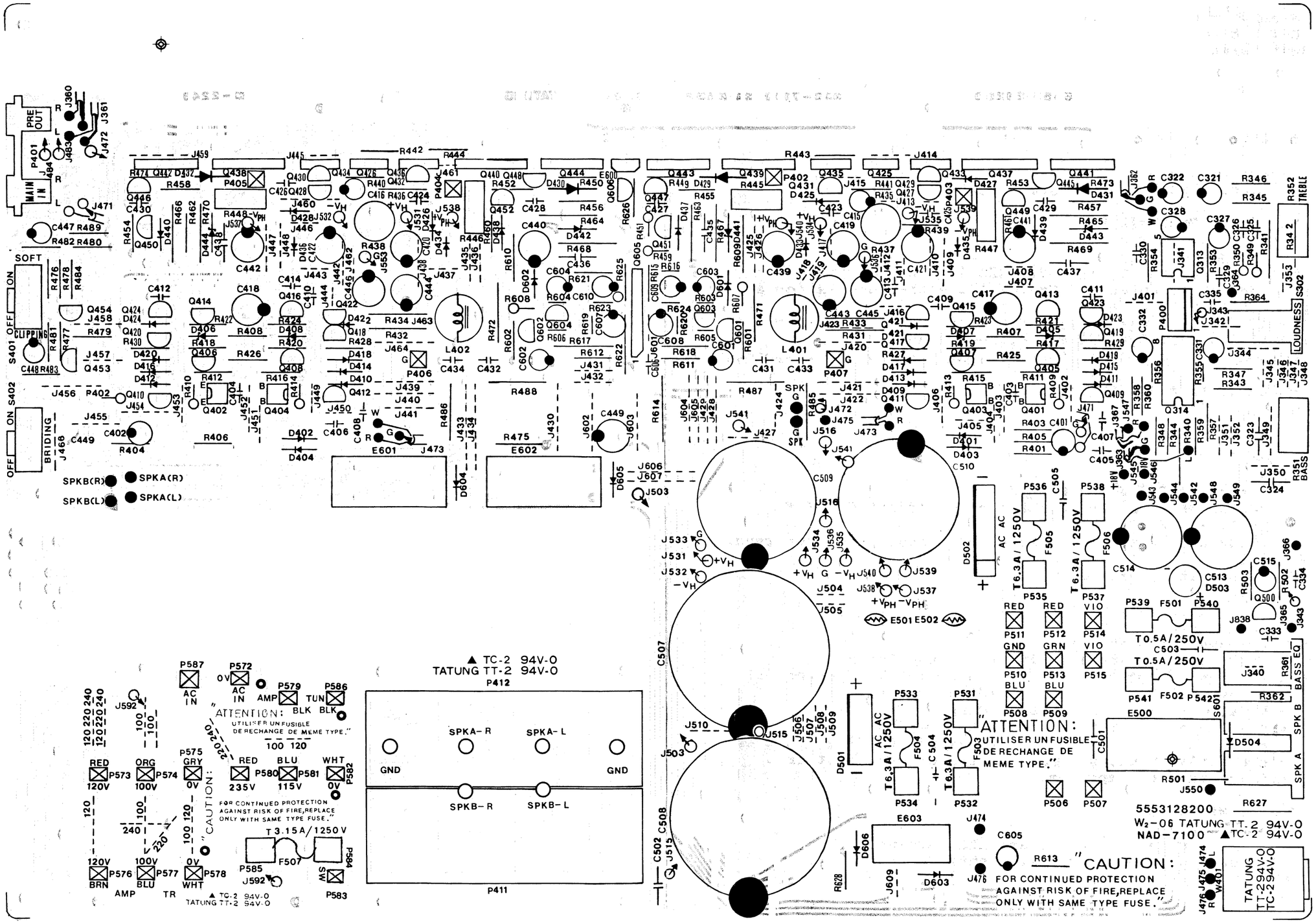

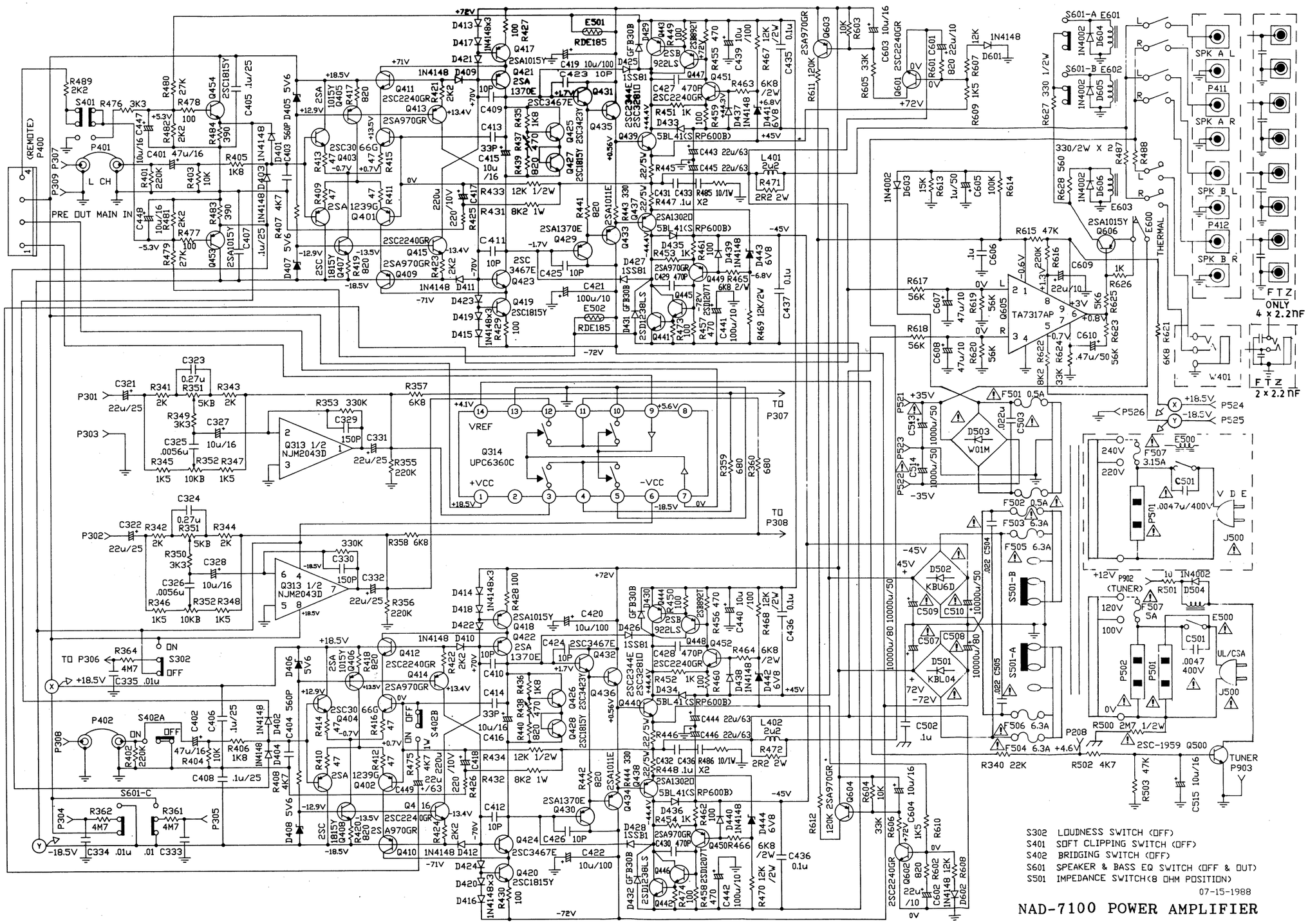
S302 LOUDNESS SWITCH (OFF)
S401 SOFT CLIPPING SWITCH (OFF)
S402 BRIDGING SWITCH (OFF)
S601 SPEAKER & BASS EQ SWITCH (OFF & OUT)
S501 IMPEDANCE SWITCH(8 OHM POSITION)
07-15-1988
NAD-7100 POWER AMPLIFIER

PREAMPLIFIER PCB LAYOUT
COMPONENT SIDE

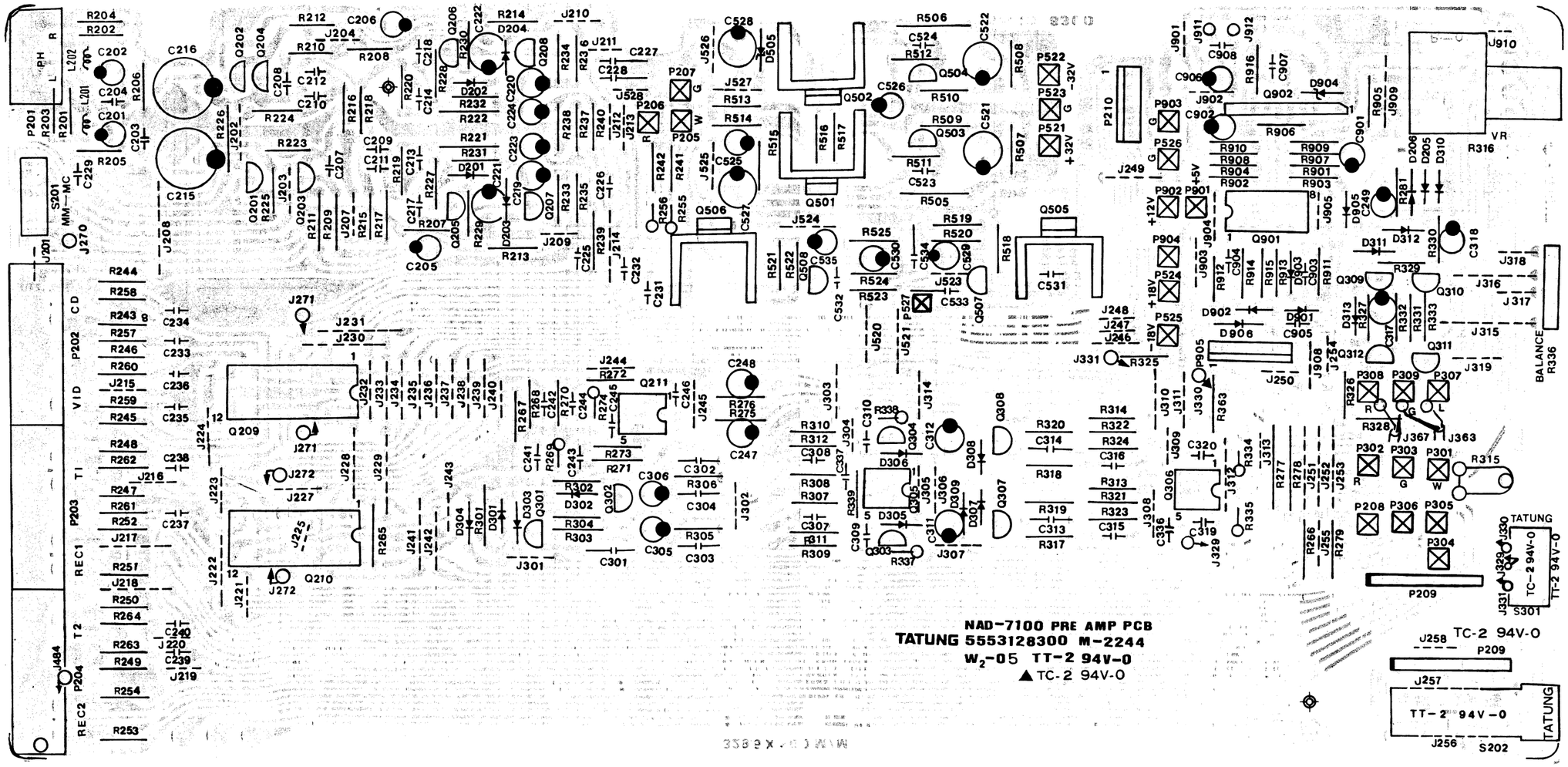

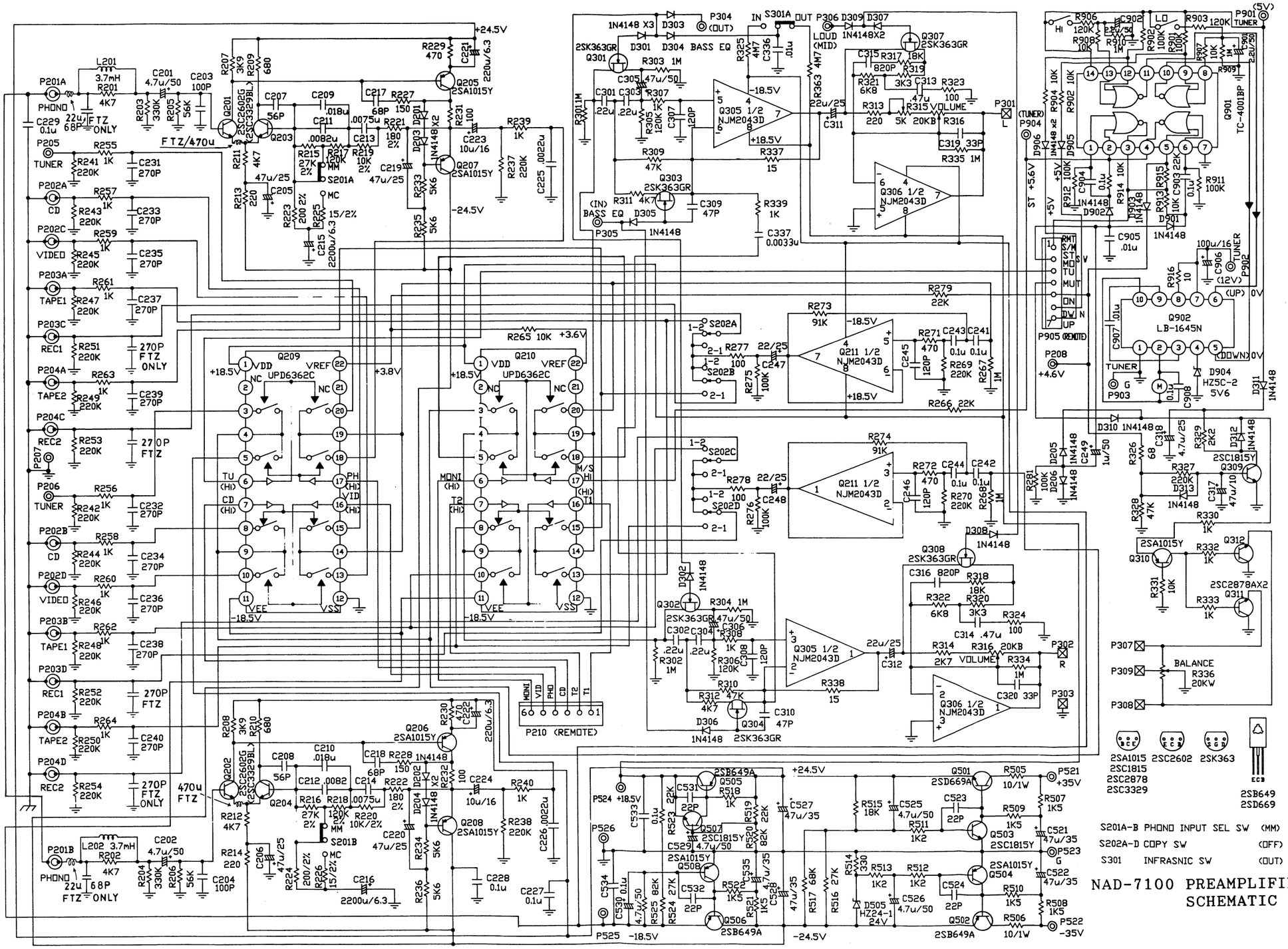

NAD-7100 PREAMPLIFIER SCHEMATIC

TUNER PCB LAYOUT
COMPONENT SIDE

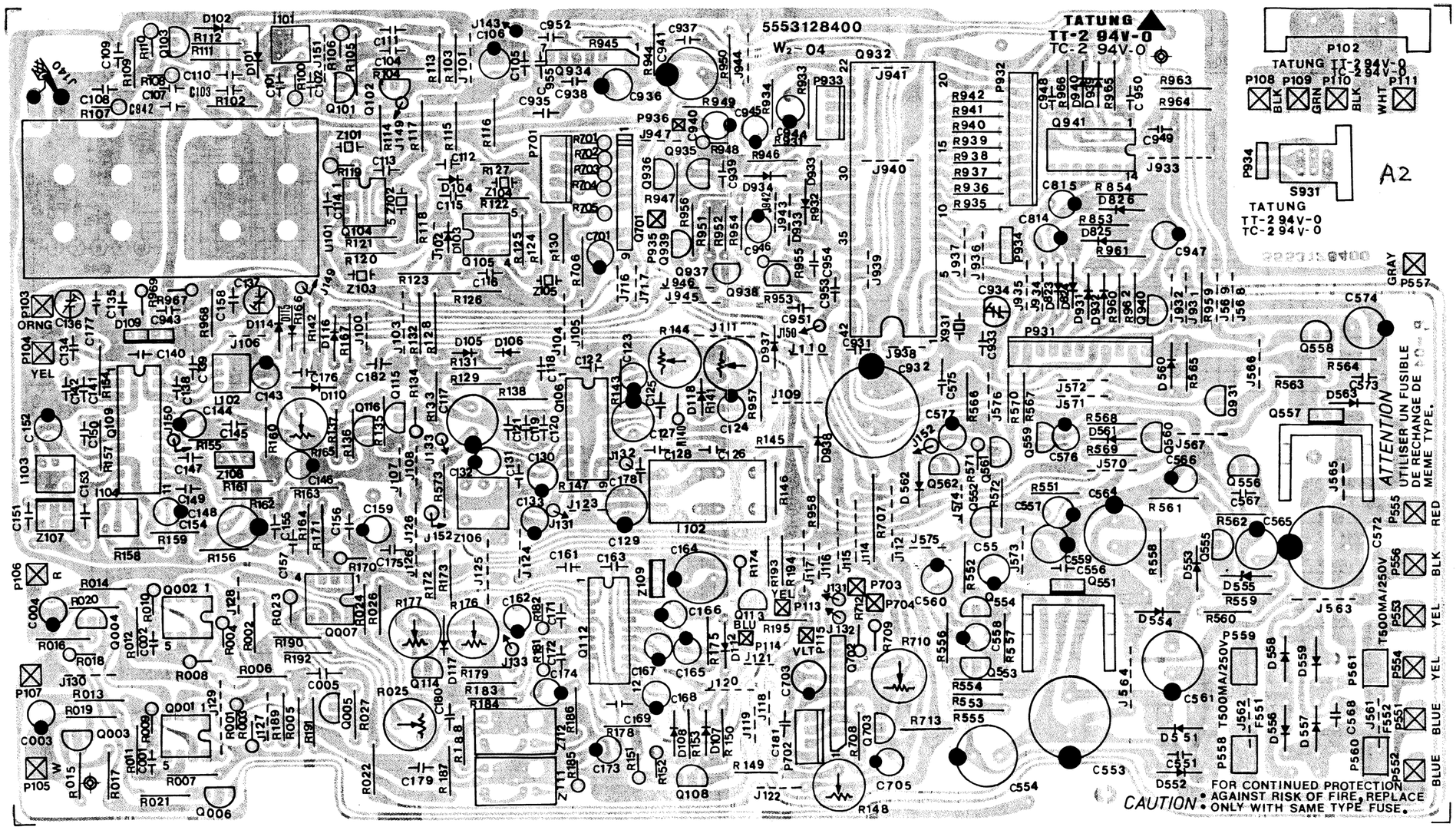

TUNER

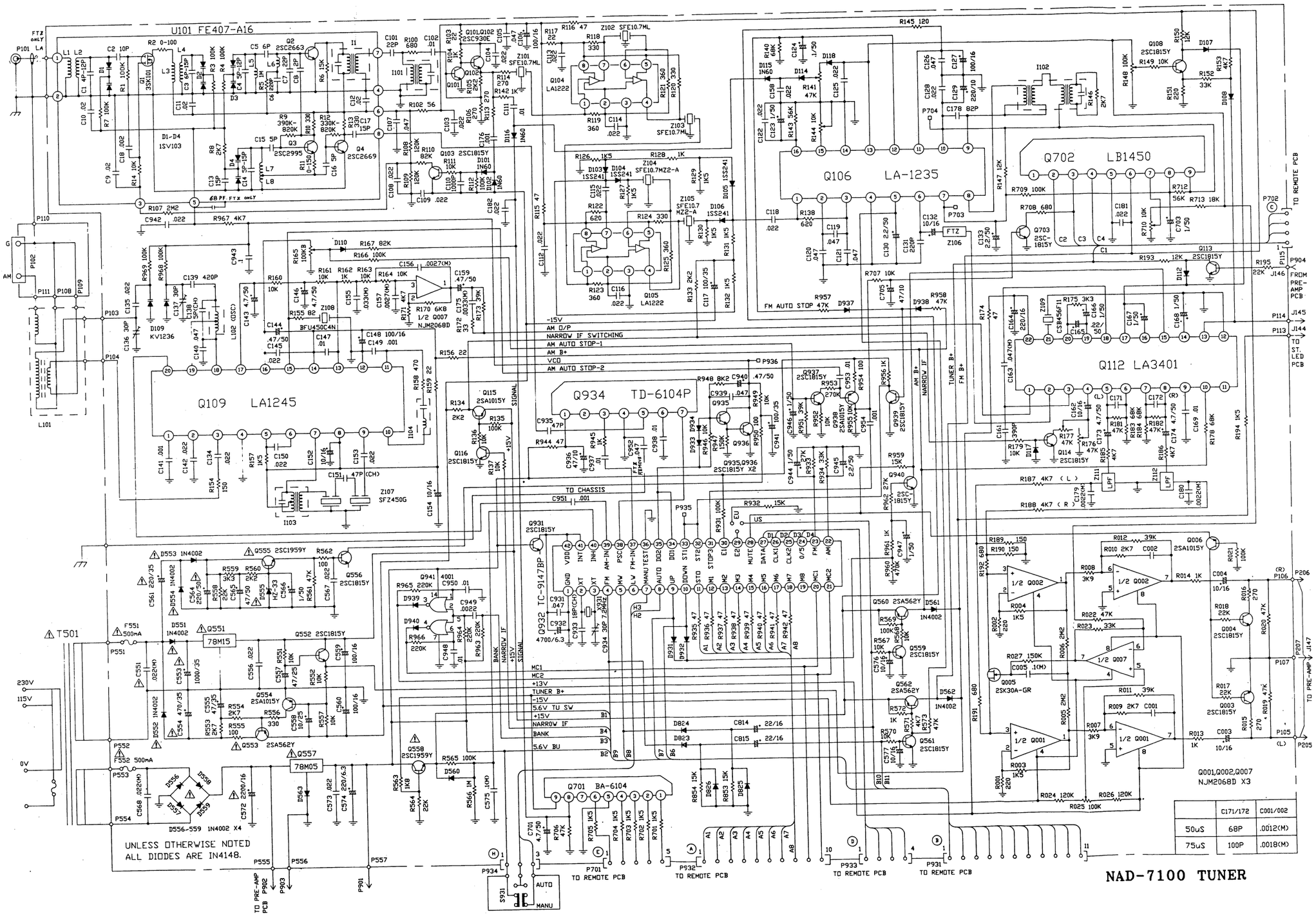

	C171/172	C001/002
50uS	68P	.0012(M)
75uS	100P	.0018(M)

NAD-7100 TUNER

REMOTE/DISPLAY PCB LAYOUT
COMPONENT SIDE

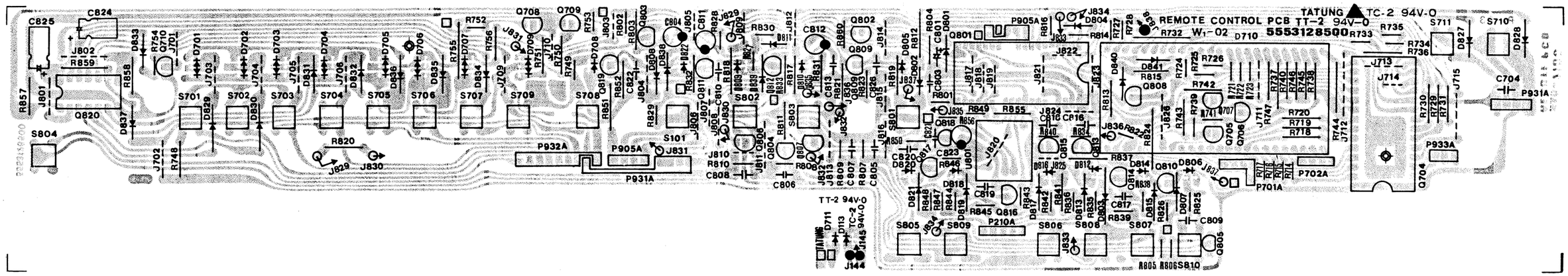

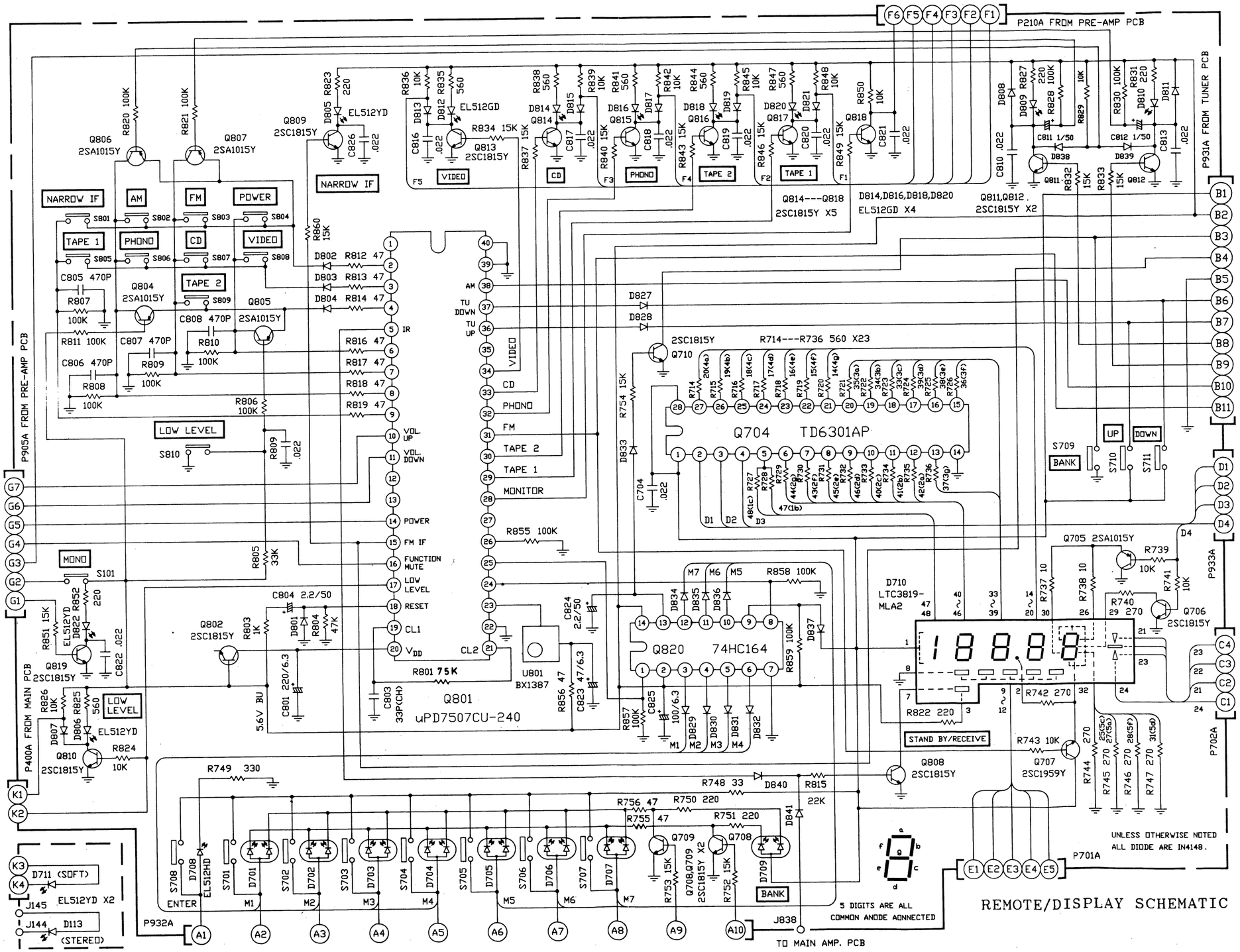

REMOTE/DISPLAY SCHEMATIC

AMPLIFIER WIRING DIAGRAM

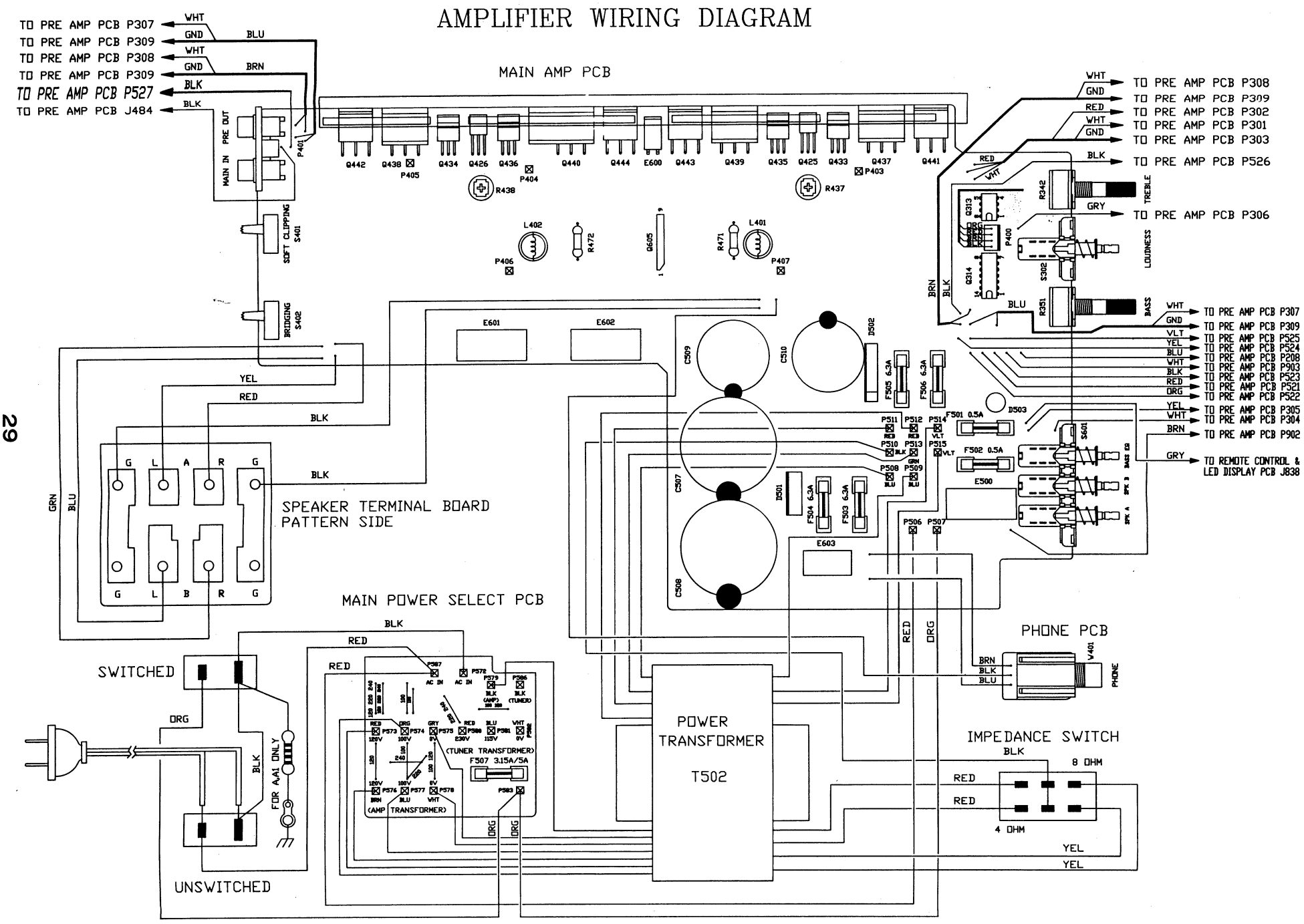

PRE AMP WIRING DIAGRAM

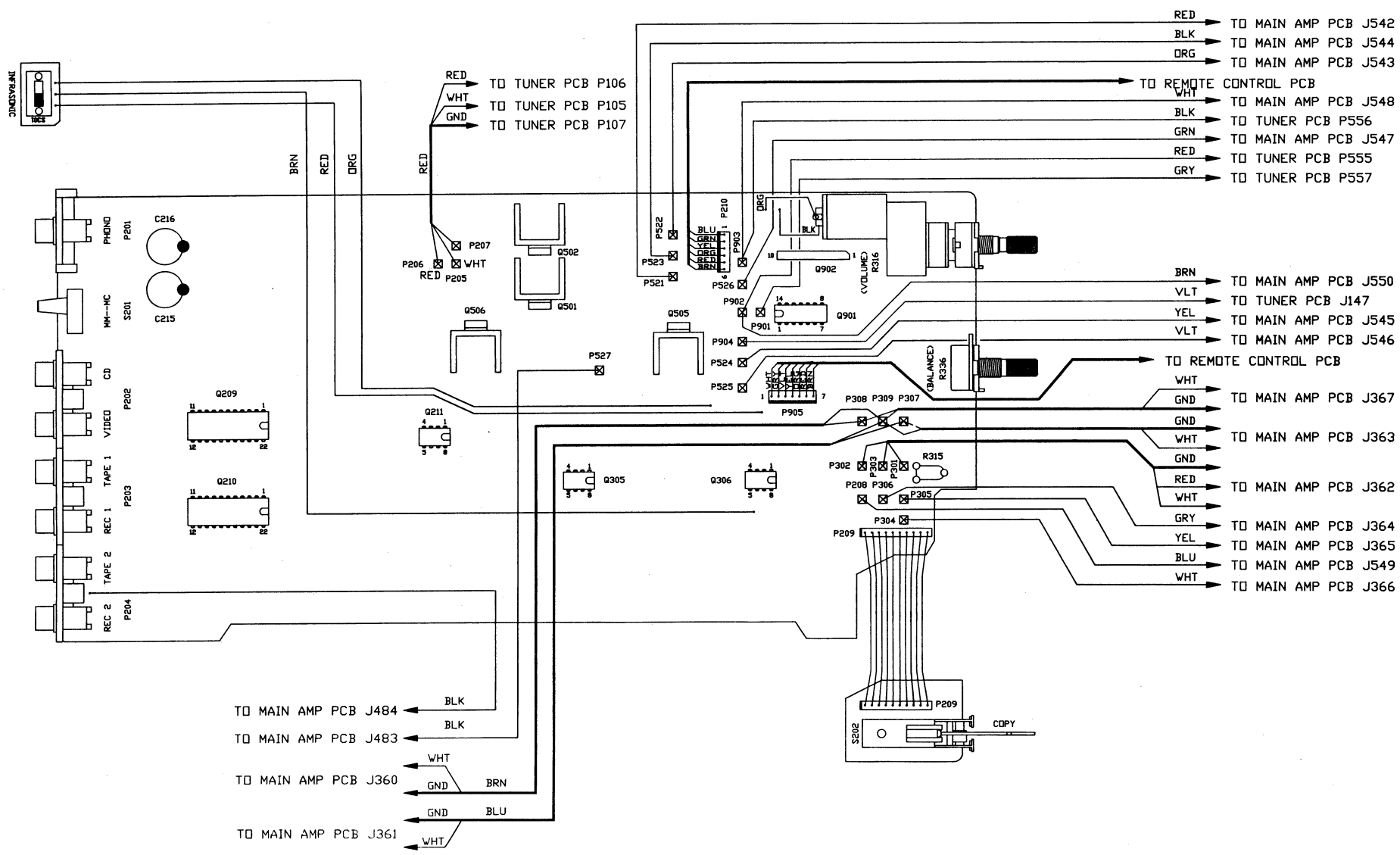

TUNER AND REMOTE/DISPLAY WIRING

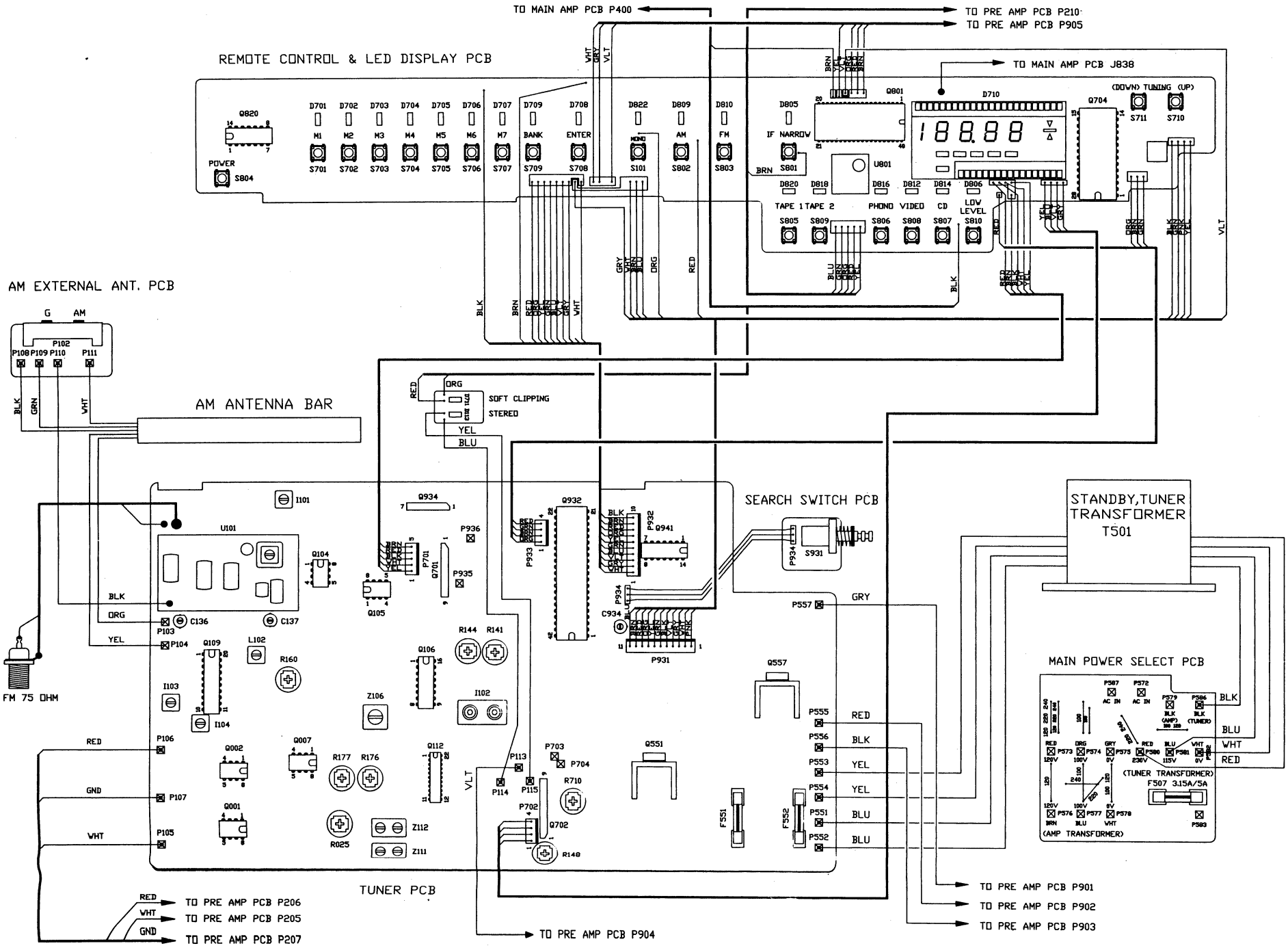

DIFFERENT PARTS LIST (A1 REF.)

PARTS NO.	DESCRIPTION	SPECIFICATION	QTY A1	A	B	B1	C	C1	UM
5090108028	PACKING ASS'Y	NAD-7100-46	1						PC
5090108036	PACKING ASS'Y	NAD-7100-47	x	1					PC
5090108044	PACKING ASS'Y	NAD-7100-B	x		1				PC
5090108045	PACKING ASS'Y	NAD-7100-B1	x			1			PC
5090108046	PACKING ASS'Y	NAD-7100-C	x				1		PC
5090108047	PACKING ASS'Y	NAD-7100-C1	x					1	PC
5090308028	CHASSIS ASS'Y	NAD-7100-46	1						PC
5090108036	CHASSIS ASS'Y	NAD-7100-47	x	1					PC
5090108044	CHASSIS ASS'Y	NAD-7100-B	x		1				PC
5090108045	CHASSIS ASS'Y	NAD-7100-B1	x			1			PC
5090108046	CHASSIS ASS'Y	NAD-7100-C	x				1		PC
5090108047	CHASSIS ASS'Y	NAD-7100-C1	x					1	PC
5556201900	SQUARE PIN	1.1 x 1.1 x 16	63	26	26	26	26	26	PC
5090408029	PCB ASS'Y	NAD-7100-46	1	1					PC
5090408046	PCB ASS'Y	NAD-7100-B	x		1	1			PC
5090408055	PCB ASS'Y	NAD-7100-C	x				1		PC
5090408047	PCB ASS'Y	NAD-7100-C1	x					1	PC
5090408030	PRE-AMP. PCB ASS'Y	NAD-7100-46	1						PC
5090408048	PRE-AMP. PCB ASS'Y	NAD-7100-B	x		1	1	1		PC
5090408049	PRE-AMP. PCB ASS'Y	NAD-7100-C1	x					1	PC
5090408031	TUNER PCB ASS'Y	NAD-7100-46	1						PC
5090408050	TUNER PCB ASS'Y	NAD-7100-B	x		1	1	1		PC
5090408051	TUNER PCB ASS'Y	NAD-7100-C1	x					1	PC
5090908048	MAIN PCB BLOCK	NAD-7100-46	1				1		PC
5090908076	MAIN PCB BLOCK	NAD-7100-B	x		1	1			PC
5090908077	MAIN PCB BLOCK	NAD-7100-C1	x					1	PC
5090908049	PRE PCB BLOCK	NAD-7100-46	1						PC
5090908078	PRE PCB BLOCK	NAD-7100-B	x		1	1	1		PC
5090908079	PRE PCB BLOCK	NAD-7100-C1	x					1	PC
5090908050	TUNER PCB BLOCK	NAD-7100-46	1						PC
5090908080	TUNER PCB BLOCK	NAD-7100-B	x		1	1	1		PC
5090908081	TUNER PCB BLOCK	NAD-7100-C1	x					1	PC
5090908052	SPEAKER PCB BLOCK	NAD-7100-46	1						PC
5090908085	SPEAKER PCB BLOCK	NAD-7100-C	x				1		PC
5090908086	POWER TERMINAL PCB BLOCK	NAD-7100-A1	1						PC
5090908061	POWER TERMINAL PCB BLOCK	NAD-7100-46	x		1	1	1		PC
5090908061	POWER TERMINAL PCB BLOCK	NAD-7100-46	x					1	PC
5142427500	RESISTOR,CARBON FILM	RD S B 1/2W 2.7ohm M J	1	x		x	x	x	PC
5142810390	RESISTOR,CARBON FILM	RD S B 1/4W 10Kohm J B	29					28	PC
5142839390	RESISTOR,CARBON FILM	RD S B 1/4W 39Kohm J B	4					5	PC
5222112291	CAPACITOR,PLOYESTER	CQ92M 50V 1200PFJ T	x		2	2	2	2	PC
5222118291	CAPACITOR,PLOYESTER	CQ92M 50V 1800PFJ T	2		x	x	x	x	PC
5247010191	CAPACITOR,CERAMIC CC45	SL DC 50V 100PFJ T	4		2	2	2	2	PC
5247068091	CAPACITOR,CERAMIC CC45	SL DC 50V 68PFJ T	2		4	4	4	4	PC
5231822391	CAPACITOR,CERAMIC CK45	F DC 50V 22000PFZ T	38					37	PC
6613003030	DIODE,SWITCHING TAPING 52	1N4148	98	96	96	96	96	96	PC
6101006000	WIRE,TIN COATED SOFT COPPER	0.6 mm	5.45	4.97	4.91	4.91	4.91	4.91	M
6173312801	WIRE,SHIELD UL-1533, BRN	SRPVC 28# 7/0.12	0.7	0.6					M
6177341104	WIRE,PVC UL CSA, YEL	300V 3A 11/0.160 T=80	x	0.26					M
6177341108	WIRE,PVC UL CSA, GRY	300V 3A 11/0.160 T=80	0.35	x					M
6707020520	INSULATION TUBING PVC UL CSA	600V T=105 AWG4 BLK 5.2	0.13	0.14					M
6707020100	INSULATION TUBING PVC UL CSA	600V T=105 AWG18 BLK 0.5	10.04		x	x	x	x	M
5535444900	SPEC. LABEL	120V UL-1 A	x	3					PC
5535444910	SPEC. LABEL	120V UL-1 A1	3	x	x	x	x	x	PC
5535444920	SPCE. LABLE	240 BS B	x		3				PC
5535444930	SPEC. LABEL	240V SA-2 B1	x			3			PC
5535444940	SPEC. LABEL	220V CEE-2 C	x				3		PC
5535444950	SPEC. LABEL	220V CEE-2 C	x					3	PC
5535446800	LABEL SPK CAUTION	NAD-7220/7020	x	1					PC
5635410800	LABEL, SERIAL NO.	TV-19TD SYSTEM (47x9)	1	x	x	x	x	x	PC
5535447800	SAFETY INSTRUCTION	NAD-USA	2	x	x	x	x	x	PC
5535203600	MARRANTY CARD	NAD-3220/7220	x		1				PC
5535203700	MARRANTY CARD(A1)	NAD-3220/7220	1		x	x	x	x	PC
5552102100	TUNER (FRONT END)	FE407-A16	1					x	PC
5552102110	TUNER (FRONT END)	FE407-G25/R16/2879	x					1	PC
5552302800	ANT. ADAPTOR	2-U4010#01	1		x	x	x	x	PC
5552302900	ANT. ADAPTOR	S-U5011#12	x		1	1	1	1	PC
5556205300	75 OHM ANT TERMINAL	12-1030	x		1	1	1	1	PC
5556205310	75 OHM ANT TERMINAL	12-1032	1		x	x	x	x	PC
5556400700	ANT. CONNECTOR	SH-756	x		1	1	1	1	PC
5545403700	SHIELD COVER	NAD-7100	1		x	x	x	x	PC
5556200800	LUG	3.1MM	2		1	1	1	1	PC
6175341700	WIRE,STRANDED 1015 TEW BLK	PVC 600V 22# 17/0.16	0.69		0.61	0.61	0.61	0.61	M
6175341702	WIRE,STRANDED 1015 TEW BLK	PVC 600V 22# 17/0.16	0.69		0.56	0.56	0.56	0.56	M
5556702130	AC POWER W/PLUG PL. BLK UL/CSA	SPT-2 41/0.16*2C*1.8M	1		x	x	x	x	PC
5556701310	POWER CORD BLK GTBS-2F 0.75MM2	24/0.2*2C*2M (BS)	x		1				PC
5556702011	AC POWER CORD W/PLUG BLK (SAA)	SAA 42/0.15*2C*1.8M	x			1			PC
5556700131	AC POWER CORD W/PLUG BLK (VDE)	PL-21 42/0.15*2C*1.8M	x				1	1	PC
5556308320	AC OUTLET (PLOARIZED)	S-I6519-02#01	2		x	x	x	x	PC
5556311400	AC SOCKET	S-I6536#01	x		1	1	1	1	PC
5554303401	FUSE 5.2*20 UL/CSA	250V 6.3A	4		x	x		x	PC
5554306500	FUSE 5.2*20	T51 250V 500MA SEMKO	x		4	4	2	4	PC
5554306501	FUSE UL & CSA 5.2*20	250V 500mA	4		x	x	2	x	PC
5554307300	FUSE SEMKO 5.2*2#p 5ST	250V 3.15A TIME LAG	x		1	1	1	1	PC
5554307501	FUSE UL/CSA 5.2*20 5MT5	125V 5A MEDIUM BLOW	1		x	x	x	x	PC
5554307600	FUSE 5.2*20 (TINE LAG)	250V 6.3A SEMKO	x		4	4		4	PC
5556205420	SPEAKER TERMINAL	SO-6249	2				x		PC
5556205430	SPEAKER TERMINAL	SO-6250 (UL)	x				2		PC
7001170612	SCREW ISO PP M3*6 S-ZN-CC	C PAN M3*6 MS ZN-CC	6	8	8	8	8	8	PC
7031161152	SCREW BPB M3x8 S-ZN-CC	C PAN 3008 TS ZN-CC	4	x	x	x	x	x	PC
7031161452	SCREW BPB M3x10 S-ZN-CC	C PAN 3010 TS ZN-CC	x	4	4	4	4	4	PC
7033161156	SCREW BPB M3x8 S-PC	C RUD 3008 TS PC	57	12	14	14	14	12	PC
7001170616	SCREW ISO PP M3*6 S-PC	C PAN M3*6 MS PC	2	2	x	x	x	x	PC
7001171116	SCREW ISO PP M3*8 S-PC	C PAN M3*8 MS PC	x	x	6	6	6	6	PC
7033161456	SCREW BRB M3*10 S-PC	C RUD 3010 TS PC	x					2	PC

DESCRIPTION	SYMBOL NO.	A1, A	B	B1	C	C1
FRONT END	U101	FE407-A16	FE407-A16	FE407-A16	FE407-A16	FE407-G25
CAPACITOR	C001, C002	0.0018 uF	0.0012 uF	0.0012 uF	0.0012 uF	0.0012 uF
CAPACITOR	C171, C172	100 pF	68 pF	68 pF	68 pF	68 pF
CAPACITOR	C942	0.022 uF	0.022 uF	0.022 uF	0.022 uF	68 pF
RESISTOR	R946	10 K ohm	10 K ohm	10 K ohm	10 K ohm	39 K ohm
INDUCTOR	L100	x	x	x	x	7 T,indm 2 ø
FUSE	F551, F552	UL/CSA,500mA	SEMKO,500mA	SEMKO,500mA	SEMKO,500mA	SEMKO,500mA
	(PARTS NO.)	5554306501	5554306500	5554306500	5554306500	5554306500
JUMPER WIRE	J938	v	x	x	x	x
ANT JACK	P101	12-1032	12-1030	12-1030	12-1030	12-1030
(75 ohm)		5556205310	5556205300	5556205300	5556205300	5556205300
CAPACITOR	C952	0.047 uF	0.047 uF	0.047 uF	0.047 uF	x
L/C	PHONO INPUT	x	x	x	x	22 uH/68 pF
CAPACITOR	TUNER P5 TO GND	x	x	x	x	C.C. 68 pF
INDUCTOR	Q201 EMITTER	x	x	x	x	470 uH
CAPACITORS	TAPE OUT	x	x	x	x	270 pF
CAPACITORS	SPEAKER + & -	x	x	x	x	2.2 nF
CAPACITORS	PHONES	x	x	x	x	2.2 nF

VERSIONS CHART :

VERSION	VOLTAGE	COUNTRY
A	120 V	Canada.
A1	120 V	U.S.A.,Taiwen, Saudi Arabia.
A2	120 V/220 V Wire/With Adaptor	Germany Police.
B	240 V	U.K., South Africa.
B1	240 V	Australia.
C	220 V	Denmark, France, Finland, Greece, Hongkong, Israel, Thailand, Singapore, Iceland, Italy, New Zealand, Norway, Netherlands, Sweden, Switzerland, Spain.
C1	220 V	West Germany

ELECTRICAL PARTS LIST :

PARTS NO.	DESCRIPTION	SPECIFICATION	SYMBOL NO.	QTY	UM
5130310007	RES.,METAL OXIDE FILM MINI.	1 W 10 ohm J L	R505,506	2	pcs
5130347203	RES.,METAL OXIDE FILM MINI.	1 W 4.7Kohm J SL	R475	1	pcs
5130412303	RES.,METAL OXIDE FILM MINI.	2 W 12Kohm J SL	R467,468,469,470.	4	pcs
5130422903	RES.,METAL OXIDE FILM MINI.	2 W 2.2ohm J SL	R471,472	2	pcs
5130433103	RES.,METAL OXIDE FILM MINI.	2 W 330ohm JSL	R487,488	2	pcs
5130468203	RES.,METAL OXIDE FILM MINI.	2 W 6.8Kohm JSL	R463,464,465,466.	4	pcs
5136003200	RES.,METAL PLATE CEMENT	5W 0.22 ohm K	R445,446,447,448	4	pcs
5136310003	RES.,METAL OXIDE FILM	1 W 10 ohm JSL	R485,486	2	pcs
5136382203	RES.,METAL OXIDE FILM	1 W 8.2Kohm JSL	R431,432	2	pcs
5141810390	RES.,CARBON FILM	1/4 W 10Kohm G B	R219,220	2	pcs
5141812490	RES.,CARBON FILM	1/4 W 120Kohm G B	R217,218	2	pcs
5141815090	RES.,CARBON FILM	1/4 W 15ohm G B	R225,226	2	pcs
5141818190	RES.,CARBON FILM	1/4 W 180ohm G B	R221,222	2	pcs
5141820190	RES.,CARBON FILM	1/4 W 200ohm G B	R223,224	2	pcs
5141827390	RES.,CARBON FILM	1/4 W 27Kohm G B	R215,216	2	pcs
5142110300	RES.,CARBON FILM	1/6 W 10Kohm J B	R603,604,739,741,826 R829,836,839,842,845 R848,850	12	pcs
5142110400	RES.,CARBON FILM	1/6 W 100Kohm J	R806,807,808,809,810 R828,830	7	pcs
5142115300	RES.,CARBON FILM	1/6 W 15Kohm J	R752,752,753,754,834 R840,843,846,849,860	9	pcs
5142122100	RES.,CARBON FILM	1/6 W 220ohm J	R822,823,827	3	pcs
5142122400	RES.,CARBON FILM	1/6 W 220Kohm J	R355,356,616	3	pcs
5142133100	RES.,CARBON FILM	1/6 W 330ohm J	R749	1	pcs
5142133300	RES.,CARBON FILM	1/6 W 33Kohm J	R605,606,624,805	4	pcs
5142147000	RES.,CARBON FILM	1/6 W 47ohm J	R814,816,856	3	pcs
5142147300	RES.,CARBON FILM	1/6 W 47Kohm J	R804	1	pcs
5142156100	RES.,CARBON FILM	1/6 W 560ohm J	R714-717,721-728,733 736,825,835,838,844,847	21	pcs
5142156300	RES.,CARBON FILM	1/6 W 56Kohm J	R619,620,623	3	pcs
5142182300	RES.,CARBON FILM	1/6 W 82Kohm J	R801	1	pcs
5142412301	RES.,CARBON FILM	1/2 W 12Kohm J C	R433,434	2	pcs
5142427500	RES.,CARBON FILM	1/2 W 2.7M J	R500	1	pcs
5142433190	RES.,CARBON FILM	1/2 W 330ohm J B	R627	1	pcs
5142810090	RES.,CARBON FILM	1/4 W 10ohm J B	R501,737,738,916	4	pcs
5142810190	RES.,CARBON FILM	1/4 W 100ohm J B	R231,232,277,278,323 324,427-430,449,450, 460-462,473,474,477, 478,555,562,950,954.	23	pcs
5142810290	RES.,CARBON FILM	1/4 W 1Kohm J B	R13,14,104,128,142, 162,239,240,257-264, 307,308,330,332,333,339, 452-454,518,572,626,803, 945,956,961	32	pcs
5142810300	RES.,CARBON FILM	1/4W 10Kohm J	R949	1	pcs
5142810390	RES.,CARBON FILM	1/4W 10Kohm J B	R111,136,137,149,160, 161,163,164,265,331, 403,404,551,552,557, 567,568,570,707,743, 824,903,904,907,908, 913,914,946,952	29	pcs
5142810490	RES.,CARBON FILM	1/4 W 100Kohm J B	R021,112,135,166,275 276,281,565,569,614, 811,820,821,855,857, 858,859,901,902,911, 912,931,968	23	pcs
5142810590	RES.,CARBON FILM	1/4 W 1M J B	R267,268,301-304,566 909,910	9	pcs
5142812190	RES.,CARBON FILM	1/4 W 120ohm J B	R145	1	pcs
5142812290	RES.,CARBON FILM	1/4 W 1.2Kohm J B	R511-513	3	pcs
5142812390	RES.,CARBON FILM	1/4 W 12Kohm J B	R147,150,193	3	pcs
5142812490	RES.,CARBON FILM	1/4 W 120Kohm J B	R024,026,109,305,306 611,612,905,906	9	pcs
5142815190	RES.,CARBON FILM	1/4 W 150ohm J B	R154,189,190,227,228	5	pcs
5142815200	RES.,CARBON FILM	1/4 W 1.5Kohm J	R194	1	pcs
5142815290	RES.,CARBON FILM	1/4 W 1.5Kohm J B	R126,127,129-132,157 345-348,507-510,521, 522,609,610	19	pcs
5142815390	RES.,CARBON FILM	1/4 W 15Kohm J B	R613,832,833,837,851 853,854,932,959	9	pcs
5142815400	RES.,CARBON FILM	1/4 W 150Kohm J	R947	1	pcs
5142815490	RES.,CARBON FILM	1/4 W 150Kohm J B	R027	1	pcs
5142818290	RES.,CARBON FILM	1/4 W 1.8Kohm J B	R405,406,435,436,563	5	pcs
5142818390	RES.,CARBON FILM	1/4 W 18Kohm J B	R317,318,515,713	4	pcs
5142820290	RES.,CARBON FILM	1/4 W 2Kohm J B	R341-344	4	pcs
5142822909	RES.,CARBON FILM	1/4 W 22ohm J B	R103,117,156,159	4	pcs
5142822100	RES.,CARBON FILM	1/4 W 220ohm J		1	pcs
5142822190	RES.,CARBON FILM	1/4 W 220ohm JB	R002,213,214,313,425 426,750,751,852	9	pcs
5142822290	RES.,CARBON FILM	1/4 W 2.2Kohm J B	R105,133,329,421-424 481,482,489,560	11	pcs
5142822300	RES.,CARBON FILM	1/4 W 22Kohm J	R195	1	pcs
5142822390	RES.,CARBON FILM	1/4 W 22Kohm J B	R017,179,266,279,340 519,523,558,564,815, 915	11	pcs
5142822490	RES.,CARBON FILM	1/4 W 220Kohm J B	R237,238,241-254,327 401,963-966	22	pcs
5142822590	RES.,CARBON FILM	1/4 W 2.2M J B	R005,006	2	pcs
5142827101	RES.,CARBON FILM	1/4 W 270ohm J C	R015	1	pcs
5142827190	RES.,CARBON FILM	1/4 W 270ohm J B	R016,113,114,740,742 744-747	9	pcs
5142827290	RES.,CARBON FILM	1/4 W 2.7Kohm J B	R146,314,553,554	4	pcs
5142827390	RES.,CARBON FILM	1/4 W 27Kohm J B	R479,480,516,524,933 962	6	pcs
5142827490	RES.,CARBON FILM	1/4 W 270Kohm J B	R953	1	pcs
5142833090	RES.,CARBON FILM	1/4 W 33ohm J B	R172,748	2	pcs
5142833190	RES.,CARBON FILM	1/4 W 330ohm J B	R118,120,124,443,444 514,556	7	pcs
5142833290	RES.,CARBON FILM	1/4 W 3.3Kohm J B	R175,319,320,476,559	5	pcs
5142833390	RES.,CARBON FILM	1/4 W 33Kohm J B	R934	1	pcs
5142833490	RES.,CARBON FILM	1/4 W 330Kohm J B	R203,204,353,354	4	pcs
5142836190	RES.,CARBON FILM	1/4 W 360ohm J B	R121,123,125	3	pcs
5142839190	RES.,CARBON FILM	1/4 W 390ohm J B	R483,484	2	pcs
5142839290	RES.,CARBON FILM	1/4 W 3.9Kohm J B	R007,207,208	3	pcs
5142839390	RES.,CARBON FILM	1/4 W 39Kohm J B	R011,012,173,951	4	pcs
5142847090	RES.,CARBON FILM	1/4 W 47ohm J B	R115,116,411,412,416 755,756,812,813,817, 818,819,935-944	22	pcs
5142847190	RES.,CARBON FILM	1/4 W 470ohm J B	R158,229,230,271,272 455-458	9	pcs
5142847290	RES.,CARBON FILM	1/4 W 4.7Kohm J B	R153,171,186-188,201 202,211,212,311,312, 407,408,502	14	pcs
5142847301	RES.,CARBON FILM	1/4 W 47Kohm J C	R328	1	pcs
5142847390	RES.,CARBON FILM	1/4 W 47Kohm J B	R019,020,022,309,310 503,561,573,615,706, 957,958	12	pcs
5142847490	RES.,CARBON FILM	1/4 W 470Kohm J B	R960	1	pcs
5142847500	RES.,CARBON FILM	1/4 W 4.7M J	R364	1	pcs
5142847501	RES.,CARBON FILM	1/4 W 4.7M J C	R325	1	pcs
5142847590	RES.,CARBON FILM	1/4 W 4.7M J	R361-363	3	pcs
5142856090	RES.,CARBON FILM	1/4 W 56ohm J B	R102	1	pcs
5142856100	RES.,CARBON FILM	1/4 W 560ohm J	R841	1	pcs
5142856190	RES.,CARBON FILM	1/4 W 560ohm J B	R718-720,729-732	7	pcs
5142856290	RES.,CARBON FILM	1/4 W 5.6Kohm J B	R233-236,625	6	pcs
5142856390	RES.,CARBON FILM	1/4 W 56Kohm J B	R143,205,206,617,618	5	pcs
5142862190	RES.,CARBON FILM	1/4 W 620ohm J B	R122,138	2	pcs
5142868090	RES.,CARBON FILM	1/4 W 68ohm J B	R326	1	pcs
5142868190	RES.,CARBON FILM	1/4 W 680ohm J B	R191,192,209,210,359 360,708	7	pcs
5142868290	RES.,CARBON FILM	1/4 W 6.8Kohm J B	R321,322,357,358,621	5	pcs
5142868390	RES.,CARBON FILM	1/4 W 68Kohm J B	R178,183,184,517	4	pcs
5142882090	RES.,CARBON FILM	1/4 W 82ohm J B	R155	1	pcs
5142882190	RES.,CARBON FILM	1/4 W 820ohm J B	R417-420,439-442,601 602,628	11	pcs
5142882290	RES.,CARBON FILM	1/4 W 8.2Kohm J B	R622	1	pcs
5142882390	RES.,CARBON FILM	1/4 W 82Kohm J B	R167,520,525	3	pcs
5142891390	RES.,CARBON FILM	1/4 W 91Kohm J B	R273	1	pcs
5145810106	RES.,CARBON FILM	1/4 W 100ohm J2U	R100	1	pcs
5145810190	RES.,CARBON FILM	1/4 W 100ohm J B	R459	1	pcs
5145810206	RES.,CARBON FILM	1/4 W 1Kohm J2U	R451	1	pcs
5145810290	RES.,CARBON FILM	1/4 W 1Kohm J B	R255,256	2	pcs
5145810306	RES.,CARBON FILM	1/4 W 10Kohm J2U	R955	1	pcs
5145810406	RES.,CARBON FILM	1/4 W 100Kohm J2U	R709,969	2	pcs
5145810506	RES.,CARBON FILM	1/4 W 1M J U	R334,335	2	pcs
5145812390	RES.,CARBON FILM	1/4 W 12Kohm J B	R607,608	2	pcs
5145812406	RES.,CARBON FILM	1/4 W 120Kohm J2U	R108	1	pcs
5145815090	RES.,CARBON FILM	1/4 W 15ohm J U	R337,338	2	pcs
5145815206	RES.,CARBON FILM	1/4 W 1.5Kohm J U	R003,004,701-705	7	pcs
5145822106	RES.,CARBON FILM	1/4 W 220ohm J2U	R001,151	2	pcs
5145822206	RES.,CARBON FILM	1/4 W 2.2Kohm J2U	R134	1	pcs
5145822306	RES.,CARBON FILM	1/4 W 22Kohm J2U	R018	1	pcs
5145822406	RES.,CARBON FILM	1/4 W 220Kohm J2U	R269	1	pcs
5145822490	RES.,CARBON FILM	1/4 W 220Kohm J B	R270,402	2	pcs
5145822506	RES.,CARBON FILM	1/4 W 2.2M J2U	R107	1	pcs
5145827106	RES.,CARBON FILM	1/4 W 270ohm J2U	R106	1	pcs
5145827206	RES.,CARBON FILM	1/4 W 2.7Kohm J2U	R009,010	2	pcs
5145833290	RES.,CARBON FILM	1/4 W 3.3Kohm J B	R349,350	2	pcs
5145833306	RES.,CARBON FILM	1/4 W 33Kohm J2U	R023,350	2	pcs
5145836106	RES.,CARBON FILM	1/4 W 360ohm J2U	R119	1	pcs
5145839206	RES.,CARBON FILM	1/4 W 3.9Kohm J U	R008	1	pcs
5145847006	RES.,CARBON FILM	1/4 W 47ohm J2U	R174	1	pcs
5145847090	RES.,CARBON FILM	1/4 W 47ohm J B	R409,410,411,414	4	pcs
5145847206	RES.,CARBON FILM	1/4 W 4.7Kohm J2U	R185,571,967	3	pcs
5145847306	RES.,CARBON FILM	1/4 W 47Kohm J U	R181,182	2	pcs
5145856306	RES.,CARBON FILM	1/4 W 56Kohm J2U	R712	1	pcs
5145868206	RES.,CARBON FILM	1/4 W 6.8Kohm J2U	R170	1	pcs
5145868306	RES.,CARBON FILM	1/4 W 68Kohm J2U	R140	1	pcs
5145882206	RES.,CARBON FILM	1/4 W 8.2Kohm J2U	R948	1	pcs
5145882306	RES.,CARBON FILM	1/4 W 82Kohm J2U	R110	1	pcs
5145891390	RES.,CARBON FILM	1/4 W 91Kohm J U	R274	1	pcs
5162310320	RES.,VR PCIDFBIOIAR 1/8W B	RH1051C10310 (10K OHM)	R144,710	2	pcs
5162310420	RES.,VR PCIDFBIOIAR 1/8W B	RH1051C10410(100K OHM)	R025,148,165	3	pcs
5162347120	RES.,VR PCIDFBIOIAR 1/8W B	H105A1471-TT(470 OHM)	R437,438	2	pcs
5162401729	RES.,VRO8FB502NCO	RH0811A50250 (5K OHM)	R315	1	pcs
5162412520	RES.,VR RV10FB473AR	1/4 W B 47Kohm M	R141,176,177	3	pcs
5169000062	RES.,VR. & MOTOR	RK16312M1001-20KBX2	R316	1	pcs
5169010433	RES.,VR.	PK16311E287-20KW	R336	1	pcs
5169020363	RES.,VR.	PK16312AA209-10KBX2	R351	1	pcs
5169020373	RES.,VR.	PK16312AA309-10KBX2	R352	1	pcs
5210307800	CAP.,ELECTROLYTIC	CEL1W 50V 10000MFM	C509,510	2	pcs
5210307900	CAP.,ELECTROLYTIC	CEL1W 80V 10000MFM	C507,508	2	pcs
5210403800	CAP.,ELECTROLYTIC	CE04CH 6.3V 220MFM	C801	1	pcs
5213110110	CAP.,ELECTROLYTIC	CE04W 6.3V 100MFT	C825	1	pcs
5213122112	CAP.,ELECTROLYTIC	CE04W 6.3V 220MFT	C221	1	pcs
5213122191	CAP.,ELECTROLYTIC	CE04W 6.3V 220MFT T	C222,574	2	pcs
5213122212	CAP.,ELECTROLYTIC	CE04W 6.3V 2200MFT	C215,216	2	pcs
5213222091	CAP.,ELECTROLYTIC	CE04W 10V 22MFT T	C601,602,608	3	pcs
5213222191	CAP.,ELECTROLYTIC	CE04W 10V 220MFT T	C129,417,418	3	pcs
5213247091	CAP.,ELECTROLYTIC	CE04W 10V 47MFT T	C317,607,608,705,936	5	pcs
5213310012	CAP.,ELECTROLYTIC	CE04W 16V 10MFT	C416,576	2	pcs
5213310091	CAP.,ELECTROLYTIC	CE04W 16V 10MFT T	C033,004,132,152,152 154,223,224,327,328, 415,447,448,515,577, 603,604	17	pcs
5213310112	CAP.,ELECTROLYTIC	CE04W 16V 100MFT	C127,148,569	3	pcs
5213310191	CAP.,ELECTROLYTIC	CE04W 16V 100MFT T	C106,560,906	3	pcs
5213322091	CAP.,ELECTROLYTIC	CE04W 16V 22MFT T	C814,815	2	pcs
5213322112	CAP.,ELECTROLYTIC	CE04W 16V 220MFT	C164	1	pcs
5213322212	CAP.,ELECTROLYTIC	CE04W 16V 2200MFT	C572	1	pcs
5213347091	CAP.,ELECTROLYTIC	CE04W 16V 47MFT T	C401,402	2	pcs
5213410091	CAP.,ELECTROLYTIC	CE04W 25V 10MFT T	C558	1	pcs
5213422091	CAP.,ELECTROLYTIC	CE04W 25V 22MF T	C247,248,311,312,321 322,331,332	8	pcs
5213447012	CAP.,ELECTROLYTIC	CE04W 25V 47MFT	C206,219,220	3	pcs
5213447091	CAP.,ELECTROLYTIC	CE04W 25V 47MFT T	C205,557	2	pcs
5213510112	CAP.,ELECTROLYTIC	CE04W 35V 100MFT	C117,941	2	pcs
5213510212	CAP.,ELECTROLYTIC	CE04W 35V 1000MFT	C553	1	pcs
5213522112	CAP.,ELECTROLYTIC	CE04W 35V 220MFT	C561	1	pcs
5213547091	CAP.,ELECTROLYTIC	CE04W 35V 47MFT T	C521,522,527,528,555	5	pcs

PARTS NO.	DESCRIPTION	SPECIFICATION	SYMBOL NO.	QTY	UM
5213547112	CAP.,ELECTROLYTIC	CE04W 35V 470MFT	C554	1	pcs
5213601012	CAP.,ELECTROLYTIC	CE04W 50V 1MFU	C123,167	2	pcs
5213601091	CAP.,ELECTROLYTIC	CE04W 50V 1MF T	C166,168,249,566,605 703,811,812,944,946, 947	11	pcs
5213610212	CAP.,ELECTROLYTIC	CE04W 50V 1000MFT	C513,514	2	pcs
5213610891	CAP.,ELECTROLYTIC	CE04W 50V 0.1MF T	C124	1	pcs
5213622112	CAP.,ELECTROLYTIC	CE04W 50V 220MFT	C564	1	pcs
5213622910	CAP.,ELECTROLYTIC	CE04W 50V 2.2MFU	C824	1	pcs
5213622991	CAP.,ELECTROLYTIC	CE04W 50V 2.2MF T	C130,133,804,901,902 945	6	pcs
5213647091	CAP.,ELECTROLYTIC	CE04W 50V 47MFT	C565	1	pcs
5213647812	CAP.,ELECTROLYTIC	CE04W 50V 0.47MFU	C144	1	pcs
5213647891	CAP.,ELECTROLYTIC	CE04W 50V 0.47MFU T	C159,305,306,610,940	5	pcs
5213647991	CAP.,ELECTROLYTIC	CE04W 50V 4.7MF T	C143,146,173,174,201 202,318,525,526,529, 530,535,701	13	pcs
5213722091	CAP.,ELECTROLYTIC	CE04W 63V 22MFT T	C443-446,449	5	pcs
5214110010	CAP.,ELECTROLYTIC	CE04W 100V 10MFT	C439	1	pcs
5214110091	CAP.,ELECTROLYTIC	CE04W 100V 10MFT T	C419-422,440-442	7	pcs
5215000400	CAP.,ELECTROLYTIC(LOW LC)	CE04W 50V 0.22MFM	C165	1	pcs
5215001201	CAP.,ELECTROLYTIC(LOW LC)	CE04W 6.3V 4700MFM	C932	1	pcs
5222110391	CAP.,ELECTROLYTIC	CE04W 50V 10000PFJ T	C907	1	pcs
5222110401	CAP.,ELECTROLYTIC	CE04W 50V 0.1MFJ	C904	1	pcs
5222110491	CAP.,ELECTROLYTIC	CE04W 50V 0.1MFJ T	C241-244,431-434,903	9	pcs
5222118291	CAP.,ELECTROLYTIC	CE04W 50V 1800PFJT	C001,002	2	pcs
5222118391	CAP.,PLOYESTER	CQ92M 50V 18000PFJ T	C209,210	2	pcs
5222122291	CAP.,PLOYESTER	CQ92M 50V 2200PFJ T	C179,180,225,226	4	pcs
5222122401	CAP.,PLOYESTER	CQ92M 50V 0.22MFJ	C179,180,225,226	4	pcs
5222127291	CAP.,PLOYESTER	CQ92M 50V 2700PFJ T	C301-304	4	pcs
5222127401	CAP.,PLOYESTER	CQ92M 50V 0.27MFJ	C156,157	2	pcs
5222133291	CAP.,PLOYESTER	CQ92M 50V 3300PFJ T	C323,324	2	pcs
5222133391	CAP.,PLOYEs				
5542225200	BEZEL (C)92M 50V 33000PJF T	C155	1	pcs	
5222147391	CAP.,PLOYESTER	CQ92M 50V 47000PFJ T	C163	1	pcs
5222147401	CAP.,PLOYESTER	CQ92M 50V 0.47MFJ	C313,314	2	pcs
5222156291	CAP.,PLOYESTER	CQ92M 50V 5600PFJ T	C325,326	2	pcs
5222175291	CAP.,PLOYESTER	CQ92M 50V 7500PFJ T	C213,214	2	pcs
5222182291	CAP.,PLOYESTER	CQ92M 50V 8200PFJ T	C211,212	2	pcs
5222210391	CAP.,PLOYESTER	CQ92M 50V 10000PFK T	C169	1	pcs
5222210401	CAP.,PLOYESTER	CQ92M 50V 0.1MFK	C005,575	2	pcs
5222222301	CAP.,PLOYESTER	CQ92M 50V 22000PFK	C551,568	2	pcs
5226142100	CAP.,PLOYESTER	CQ08S 50V 420PFJ	C139	1	pcs
5230102701	CAP.,CERAMIC CK45 (KC)	400V 4700PFM	C501	1	pcs
5231356191	CAP.,CERAMIC CK45	50V 560PFK T	C403,404	2	pcs
5231382191	CAP.,CERAMIC CK45	50V 820PFK T	C315,316	2	pcs
5231510201	CAP.,CERAMIC CK45	50V 1000PFM	C337	1	pcs
5231510291	CAP.,CERAMIC CK45	50V 1000PFM T	C110,141,149,176,954	5	pcs
5231522291	CAP.,CERAMIC CK45	50V 2200PFM T	C102,111,147,333-336	14	pcs
5231810391	CAP.,CERAMIC CK45	50V 10000PFZ T	905,937,938,948,950, 951,953		
5231810401	CAP.,CERAMIC CK45	50V 0.1MFZ	C227,228,435-438,502 533,534	9	pcs
5231822391	CAP.,CERAMIC CK45	50V 22000PFZ T	C103,104,108,109,112 113-116,118,122,125, 128,134,135,142,145, 150,153,158,181,182, 556,567,573,704,809, 810,813,816-822,826, 942	38	pcs
5231847391	CAP.,CERAMIC CK45	50V 47000PFZ T	C105,107,119-121,126 140,931,939,952	10	pcs
5236110401	CAP. SEMICONOUCTIVE	25V 0.1UF K	C606	1	pcs
5236110491	CAP. SEMICONOUCTIVE	25V 0.1UF K T	C229,405-408,908	6	pcs
5236310401	CAP.,BARRIER LAYER CG45	50V 0.1MFZ	C943	1	pcs
5240103000	CAP.,MONOLITHIC	50V 82PFJ	C178	1	pcs
5242205001	CAP.,CERAMIC CC45	50V 5PFC	C138	1	pcs
5242218091	CAP.,CERAMIC CC45	50V 18PFJ T	C933	1	pcs
5242233001	CAP.,CERAMIC CC45	50V 33PFJ	C803	1	pcs
5242247091	CAP.,CERAMIC CC45	50V 47PFJ T	C151,935	2	pcs
5247010191	CAP.,CERAMIC CC45	50V 100PFJ T	C171,172,203,204	4	pcs
§247022091	CAP.,CERAMIC CC45	50V 22PFJ T	C101,523,524,531,532	5	pcs
5247033091	CAP.,CERAMIC CC45	50V 33PFJ T	C310.320.413.414	4	pcs
5247047091	CAP.,CERAMIC CC45	50V 47PFJ T	C309,310	2	pcs
5247056091	CAP.,CERAMIC CC45	50V 56PFJ T	C207,208	2	pcs
5247068091	CAP.,CERAMIC CC45	50V 68PFJ T	C217,218	2	pcs
5247110091	CAP.,CERAMIC CC45	50V 10PFK T	C409-412,423-426	8	pcs
5247112191	CAP.,CERAMIC CC45	50V 120PFK T	C245,246,307,308	4	pcs
5247115191	CAP.,CERAMIC CC45	50V 150PFK T	C329,330	2	pcs
5247122191	CAP.,CERAMIC CC45	50V 220PFK T	C131	1	pcs
5247127191	CAP.,CERAMIC CC45	50V 270PFK T	C231-240	10	pcs
5247139191	CAP.,CERAMIC CC45	50V 390PFK T	C161	1	pcs
5247147191	CAP.,CERAMIC CC45	50V 470PFK T	C427-430,805-808	8	pcs
5272222301	CAP.,CERAMIC CC45	250V 22000PFK	C503-505	3	pcs
5293147000	CAP.,CERAMIC CC45	6.3V 47MFM	C823	1	pcs
5419700190	HINGE	VRH-8300	6C01,6C02	2	pcs
5532410700	PE SPONGE	25*11*15mm	6C08,6C09	2	pcs
5535122011	OWNERS MANUAL	NAD-7100-46	Y500	1	pcs
5535203700	WARRANTY CARD(A1)	NAD-3220/7220	1P16	1	pcs
5535444850	SERIAL LABEL	NAD-7100	1P01,1P02,2B01	3	pcs
5535444910	SPEC. LABEL	120V UL-1 A1	1P13-1P15	3	pcs
5535445000	INSPECTION,LABEL	NAD-SERIES	6C10	1	pcs
5535447300	LABEL (P)	NAD-7100	1P09	1	pcs
5535447800	SAFETY INSTRUCTION	NAD-USA	1P17,1P19	2	pcs
5540100200	WIRE CLAMP,WITH TUBE	K-1127	P613,614	2	pcs
5540100701	BINDER		J621 - 632	12	pcs
5541002300	TOP COVER	NAD-7100	5F01	0	pcs
5541213100	FRONT PANEL	NAD-7100	6F01	0	pcs
5541537100	PUSH KNOB (S)	NAD-7100	3F26-3F33	0	pcs
5541537200	POWER KNOB	NAD-7100	3F21	0	pcs
5541537300	BAND KNOB	NAD-7100	3F08-3F19	0	pcs
5541537400	KNOB HOLDER	NAD-7100	3F24,3F25	2	pcs
5541537510	CONTROL KNOB	NAD-7100	3F22,3F23	2	pcs
5541537600	PLAY BUTTOM	NAD-7100	3F20	0	pcs
5541537700	PUSH BUTTON	NAD-7100	3F04-3F07	0	pcs

PARTS NO.	DESCRIPTION	SPECIFICATION	SYMBOL NO.	QTY	UM
5541539000	PUSH BUTTON	NAD-7100		2	pcs
5541537800	TOGGLE CAP	NAD-7100	3F03	1	pcs
5541537900	VOL. KNOB	NAD-7100	3F01	0	pcs
5541538000	VOL. KNOB (S)	NAD-7100	3F02	0	pcs
5542006100	HEMELON (S)	28 * 6.5MM	6F09,6F10	2	pcs
5542006110	HEMELON (L)	45 * 6.5MM	6F11,6F12	2	pcs
5542225000	BEZEL (A)	NAD-7100	6F03	1	pcs
5542225100	BEZEL (B)	NAD-7100	6F04	1	pcs
5542225200	BEZEL (C)	NAD-7100	6F06	1	pcs
5542225300	BEZEL	NAD-7100	6F07	1	pcs
5542225400	POWER BEZEL	NAD-7100	6F05	1	pcs
5542225800	DOUBLE BEZEL	NAD-7100	6F08	1	pcs
5542909400	RECEIVER WINDOW	NAD-7100	6F02	1	pcs
5545306900	HEAT SINK (S)	NAD-7100	5C08-5C11	4	pcs
5545306910	HEAT SINK (S)	L=21	5C12,5C13	2	pcs
5545307700	TRATSISTOR HOLDER	NAD-7100	5C07	1	pcs
5545307800	HEAT SINK (A)	NAD-7100	5C05	1	pcs
5545307810	HEAT SINK (B)	NAD-7100	5C06	1	pcs
5545403700	SHIELD COVER	NAD-7100	6C07	1	pcs
5546121400	TERMINAL	NAD-310/710	5B05	1	pcs
5546322900	PUSH SPRING	NAD-7100	5F20-5F28	9	pcs
5547323000	PLAY SPRING	NAD-7100	5F07-5F19	13	pcs
5546323400	TRANSISTOR RING	NAD-7100	5C14,5C15	2	pcs
5547032210	FUSE CLIP (5.2)	CQ-203S	P531-42,558-561,584, 585	18	pcs
5547033600	TERMINAL CONNECTOR	NAD-7100	5B03,5B04	2	pcs
5547033800	BRACKET PLATE (R)	NAD-7100	5F06	1	pcs
5547033900	LUG	NAD-7100	5B02	1	pcs
5547034000	THERMAL PROTECTOR HOLDER	NAD-7100	5C02	1	pcs
5547034400	FLAT PIN 1.7*1.7*9.4	NAD-7100/2100	P572-583,586,587	14	pcs
5547035700	TUNER HOLDER	NAD-7100	5C03,5C04	2	pcs
5547035800	HOLDER	NAD-7100	5C07,5C16	2	pcs
5547131100	TRS. PLATE	NAD-7100	5C01	1	pcs
5547131500	FRONT BRACKET	NAD-7100	5F02	1	pcs
5547131600	PLATE (L)	NAD-7100	5F05	1	pcs
5547131700	PLATE (R)	NAD-7100	5F04	1	pcs
5547131800	CHASSIS	NAD-7100	5S01	1	pcs
5547131900	BACK PLATE	NAD-7100	5B01	1	pcs
5547132000	FRONT BRACKET	NAD-7100	5F03	1	pcs
5547501200	BUSHING,POWER CORD	SR-4P-4	6B02,6B03	2	pcs
5547504600	BASE,VFS	K-0453	7F28-7F31	4	pcs
5547528400	PLATE,SWITCH LOCK (PVC)	NAD-310/710	6B01	1	pcs
5547529600	SILIXON WAX GLASS TUBE (WHT)	SVGS-UL KIA=12#p	J643	0.1	M
5547529610	SILIXON WAX GLASS TUBE (WHT)	SVGS-UL DIA=8 m/m	J644	0.055	M
5547530400	PCB SUPPORT	SCB-15	6B04-6B06	3	pcs
5547802120	FOOT	NAD-7100	6C03-6C06	4	pcs
5550000200	INFARED REMOTE CONT. RECEIVER	BX-1387	U801	1	pcs
5550103300	CERAMIC FILTER	SFZ450G	Z107	1	pcs
5550103400	CERAMIC RESONATOR	BFU450C4N	Z108	1	pcs
5550103500	CERAMIC RESONATOR	CSB456F11	Z109	1	pcs
5550103620	CERAMIC FILTER	SFE10.7MZ2-A	Z104,105	2	pcs
5550103630	CERAMIC FILTER	SFE10.7ML-A	Z101-103	3	pcs
5552000200	REMOTE CONTROL TRANSMITTER	NAD-7100	P000	1	pcs
5552102100	TUNER	FE407-A16	U101	1	pcs
5552302800	ANT. ADAPTOR	2-U4010#01	P002	1	pcs
5552402900	TRIMMER	CTZ51F111 & TZ03R300F	C136,137,934	3	pcs
5553128200	MAINAMP 329.5*230 94V-0 2VCUT	NAD-7100	B400	1	pcs
5553128300	PREAMP PCB 239.5*160mm 94V-0	NAD-7100	B200	1	pcs
5553128400	TUNER PCB 279*158m/m 94V-0	NAD-7100	B100	1	pcs
5553128500	REMOTE PCB 414*71m/m 94HB	NAD-7100	B801	1	pcs
5554303401	FUSE 5.2*20 UL/CSA	250V 6.3A	F503-506	4	pcs
5554306501	FUSE UL & CSA 5.2*20	250V 500mA	F501,502,551,552	4	pcs
5554307501	FUSE UL & CSA 5.2*20 5MT5	125V 5A MEDIUM BLOW	F507	1	pcs
5554431610	SLIDE SWITCH	SSSB022NB1-NB1-TT	S301	1	pcs
5554431800	SLIDE SWITCH	FZUB22-10	S201,401,402	3	pcs
5554432400	SLIDE SWITCH	SBN22-09	S501	1	pcs
5554432500	PTC SWITCH (50V/40A)	RDE185A	E501,502	2	pcs
5554432700	1P PUSH SWITCH (SPX-02)	HY-76035	S931	1	pcs
5554434800	1P PUSH SWITCH	SPUF12AE15-TT	S302	1	pcs
5554434900	3P PUSH SWITCH	SPUN31C001	S601	1	pcs
5554435000	LEVER SWITCH	SLLR543ND1-TT	S202	2	pcs
5554435100	THERNAL PROTECT SWITCH	TP1101K91	E600	1	pcs
5554501800	RELAY	VS-12MB-TV5	E500	1	pcs
5554501900	RELAY	VB-24MB-TV3	E601,602	2	pcs
5554502000	RELAY	VB-24W	E603	1	pcs
5556102004	4P MALE WAFER	IL-G-SP-S3T2-E	P400,702,933	3	pcs
5556102005	5P MALE WAFER	IL-G-5P-S3T2-E	P701	1	pcs
5556102006	6P MALE WAFER	IL-G-6P-S3T2-E	P210	1	pcs
5556102007	7P MALE WAFER	IL-G-7P-S3T2-E	P905	1	pcs
5556102010	10P MALE WAFER	IL-G-10P-S3T2-E	P932	1	pcs
5556102011	11P MALE WAFER	IL-G-11P-S3T2-E	P931	1	pcs
5532410700	SPACER			2	pcs
5556200800	LUG	3.1MM	P112,612	2	pcs
5556201900	SQUARE PIN	1.1*1.1*16	P103-111,113-115 ,206 207,208,301-309, 313, 403-407,506-515, 521, 522-527,551-557, 703, 704,901-904,935, 936	63	pcs
5556204600	4P SIGNAL JACK	12-2092	P202-204,401	4	pcs
5556204710	2P SIGNAL JACK	12-2123-1	P201	1	pcs
5556205310	75 OHM ANT TERMINAL	12-1032	P101	1	pcs
5556205420	SPEAKER TERMINAL	SO-6249	P411,412	2	pcs
5556205500	2P TERMINAL	S-Q2723#40	P102	1	pcs
5556308320	AC OUTLET (POLARIZED)	S-I6519-02#01	P501,502	2	pcs
5556311300	6.4 JACK	JY-6312-02-030	W401	1	pcs
5556514003	4P HOUSING ASS'Y (L=250)	UL-1007 AWG26# 7/0.16	P400A	1	pcs
5556514015	4P HOUSING ASS'Y	UL-1007 AWG26# 7/0.16	P702A	1	pcs
5556514016	4P HOUSING ASS'Y	UL-1007 AWG26# 7/0.16	P933A	1	pcs
5556514107	5P HOUSING ASS'Y	UL-1007 AWG26# 7/0.16	P701A	1	pcs
5556514206	6P HOUSING ASS'Y	UL-1007 AWG26# 7/0.16	P210A	1	pcs
5556514304	7P HOUSING ASS'Y	UL-1007 AWG26# 7/0.16	P905A	1	pcs
5556514602	10P HOUSING ASS'Y	UL-1007 AWG26# 7/0.16	P932A	1	pcs
5556514700	11P HOUSING ASS'Y	UL-1007 AWG26# 7/0.16	P931A	1	pcs
5556702130	AC POWER W/PLUG PL.BLK UL/CSA	SPT-2 41/0.16*2C*1.8M	J500	1	pcs
5556900220	3P PVC PARALLEL WIRE(L=120MM)	UL2877 AWG26# 7/.16 BLK	P934	1	pcs

PARTS NO.	DESCRIPTION	SPECIFICATION	SYMBOL NO.	QTY	UM
5556900900	10P PVC PARALLEL WIRE (L=100)	UL2877 AWG26# 7/.16 BLK	P209	1	pcs
5561317000	POWER TRANSFORMER (EI-96)	100/120/240V 50/60HZ	T502	1	pcs
5561317020	POWER TRANSFORMER (EI-48)	115/230V 60/50HZ	T501	1	pcs
5562000800	SPRING COIL	JS87SP14	L401,402	2	pcs
5563208700	AM BAR ANT ASS'Y (220UH)	0499-384-W114A	L101	0	pcs
5564313200	AM OSC COIL (120UH)	2157-384-W220	L102	1	pcs
5564401300	TRAP COIL (L=3.7MH ±30% 1KHZ)	TWS-384-407(3.7MH ±30%)	L201,202	2	pcs
5565105200	AM IFT	2150-384-W142	I103	1	pcs
5565105400	AM IFT-(2)	2150-384-W317	I104	1	pcs
5565204600	FM IFT-(1) 10.7HZ ±3%	2153-384-W224	I101	1	pcs
5565302500	FM FIZ FILTER	34H-056-1366	Z106	1	pcs
5565400600	FM DETECTOR IFT	0203-3384-W008A	I102	1	pcs
5565400700	FM MPX LPF	0570-384-W003	Z111,112	2	pcs
5635410800	LABEL,SERIAL NO.	TV-19TD SYSTEM (47*9)	1P18	1	pcs
6101006000	WIRE,TIN COATED SOFT COPPER	0.6MM	J100-113,115-130,151 200-204,207-225,227, 228-258,301-319,340, 342,344-353,401-464, 466,504-510,521,523, 524-528,563-576,592, 594-599,601-607,609, 701-706,709-714,716, 717,801-826,901-905, 908-910,931-947	18.39	M
6130003500	WIRE,PVC BLACK	24AWG 7/0.2 ATC UL1007	J270,343,472,475,483 503,515,544,551,912	2.15	M
5130003511	WIRE,PVC BROWN	24AWG 7/0.2 ATC UL1007	J149,272,329,474,550	1.15	M
5130003522	WIRE,PVC RED	24AWG 7/0.2 ATC UL1107	J330,542,552,831,835	1.315	M
6130003533	WIRE,PVC ORANGE	24AWG 7/0.2 ATC UL1107	J150,331,543,829,836 911	1.33	M
6130003544	WIRE,PVC YELLOW	24AWG 7/0.2 ATC UL1107	J132,144,365,545,715 830	1.505	M
6130003555	WIRE,PVC GREEN	24AWG 7/0.2 ATC UL1107	J547	0.38	M
6130003566	WIRE,PVC BLUE	24AWG 7/0.2 ATC UL1107	J131,145,476,549,832	1.065	M
6130003577	WIRE,PVC PURPLE	24AWG 7/0.2 ATC UL1107	J146,152,546,833	1.02	M
6130003588	WIRE,PVC GRAY	24AWG 7/0.2 ATC UL1107	J271,364,553,834	0.725	M
6130003599	WIRE,PVC WHITE	24AWG 7/0.2 ATC UL1107	J133,366,548,837	0.95	M
6130005400	WIRE,PVC BLACK	20AWG 7/0.32 UL1007	J481,482,516	0.75	M
6130005422	WIRE,PVC RED	20AWG 7/0.32 UL1007	J478	0.155	M
6130005444	WIRE,PVC YELLOW	20AWG 7/0.32 UL1007	J477	0.135	M
6130005454	WIRE,PVC GREEN/YELLOW	20AWG 7/0.32 UL1007	J480	0.145	M
6130005466	WIRE,PVC BLUE	20AWG 7/0.32 UL1007	J479	0.155	M
6150112101	WIRE,CABLE COAXIAL	300V 1.7C-2V BLK UL	J140	0.12	M
6173312801	WIRE,SHIELD UL-1533	SRPVC 28# 7/0.12	J360,367	0.7	M
6173312806	WIRE,SHIELD UL-1533	SRPVC 28# 7/0.12	J361,363,471	1.04	M
6175341700	WIRE,STRANDED 1015 TEW BLK	PVC 600V 22# 17/0.16	J555,557,559	0.69	M
6175341702	WIRE,STRANDED 1015 TEW RED	PVC 600V 22# 17/0.16	J554,556,592	0.69	M
6175341703	WIRE,STRANDED 1015 TEW ORN	PVC 600V 22# 17/0.16	J558,560	0.63	M
6177341100	WIRE,PVC UL CSA BLK	300V 3A 11/0.16 T=80	J141,143	0.21	M
6177341108	WIRE,PVC UL CSA GRY	300V 3A 11/0.16 T=80	J838	0.35	M
6177341700	WIRE,STRANDED 1007 TR-64 BLK	PVC 300V 22# 17/0.16	J484,5333,536	0.455	M
6177341701	WIRE,STRANDED 1007 TR-64 BRN	PVC 300V 22# 17/0.16	F538,540	0.415	M
6177341702	WIRE,STRANDED 1007 TR-64 RED	PVC 300V 22# 17/0.16	J531,534	0.355	M
6177341703	WIRE,STRANDED 1007 TR-64 ORN	PVC 300V 22# 17/0.16	J532,535	0.355	M
6177341704	WIRE,STRANDED 1007 TR-64 YEL	PVC 300V 22# 17/0.16	J541	0.07	M
6177341708	WIRE,STRANDED 1007 TR-64 GRY	PVC 300V 22# 17/0.16	J537,539	0.445	M
6179302801	WIRE,TWIN SHIELD UL-2547 BRN	SRPVC 300V 28# 7/0.12	J362	0.27	M
6179302802	WIRE,TWIN SHIELD UL-2547 BED	SRPVC 300V 28# 7/0.12	J147	0.34	M
6179302808	WIRE,TWIN SHIELD UL-2547 GRY	SRPVC 300V 28# 7/0.12	J473	0.18	M
6611007200	DEODE,RECTIFIER MOT	1N4002 100V 1A G	D603	1	pcs
6611007230	DEODE,RECTIFIER TAPING	1N4002 100V 1A	D504,551-554,556-559 561,562,604-606	14	pcs
6611029701	DI REC W01M GIT	100V 1.5A BRIDGE	D503	1	pcs
6611030700	DI REC KBL04 GDT	400V 4A BRIDGE	D501	1	pcs
6611030800	DI REC KBU6D GIT	200V 6A BRIDGE	D502	1	pcs
6611030900	DI REC 5BL41 TSB	100V 5A TRR=40NS	D433-436	4	pcs
6611031040	DI REC GFB30B SYO	100V 3A SWITCHING T=52MM	D429-432	4	pcs
6611031200	DI REC SRP600B GIT	100V 6A	D433-436	4	pcs
6612004001	DIODE,DETECTOR	1N60	D101,102,115,116	4	pcs
6613003030	DIODE,SWITCHING TAPING 52	1N4148	D107,108,110,112,114 117,118,201-206,301, 302-313,401-404,409, 410-424,437-440,560, 563,601,602,801-804, 807,808,811,813,815, 817,819,821,823-841, 901-903,905,906,931, 932-934,937-940	98	pcs
6613007131	DI SWI 1SS81 HIT	200V 1A TAPING 52MM	D425-428	4	pcs
6613007500	DI SWI 1SS241 TSB	IF=100MA CT=1.2PF	D103-106	4	pcs
6614005700	DI VAR KV1236Z-(3) TOK	474PF	D109	1	pcs
6615005734	DI ZEN UZ-5.6B-M UNI	5.4-5.8V 0.5W TAPING 26MM	D405-408,904	5	pcs
6615009753	DI ZEN HZ5-C-2 HIT	0.5W 5-5.2V TAPING 52MM	D441-444	0	pcs
6615009757	DI ZEN HZ6-A-3 HIT	0.5W 5.4-5.7V TAPING 52M	D405-408,904	0	pcs
6615012432	DI ZEN UZ-5.1-B UNI	4.8-5.4V 0.5W	D441-444	4	pcs
6615013800	DI ZEN HZ-33-1 HIT	31.2-32.6V	D555	1	pcs
6615016101	DI ZEN HZ24-1 HIT	22.9-24V	D505	1	pcs
6618009100	LED,LAMP	2*5MM RED DIFFUSED	D708	1	pcs
6618009400	LED,LAMP	2*5MM YELLOW DIFFUSED	D113,711,805,806,822	5	pcs
6618010900	LED,LAMP	2*5MM GRN DIFFUSED	D809-810,812,814,816 818,820	7	pcs
6618015900	DI LED LTC-3819MLA2 LIT	4.5 DIGIT 0.3 INCH	D710	1	pcs
6618017400	DI LED EL529YGW-A	2*5MM YEL/GRN	D701-707,709	8	pcs
6621001021	TRANSISTOR,NPN HF	2SC1959-Y	Q500,555,558,707	4	pcs
6621012101	TRANSISTOR,NPN HF	2SC930E	Q101,102	2	pcs
6621015302	TRANSISTOR,NPN HF TSB	2SC1815-Y	Q427,428,507,706,808	5	pcs
6621015332	TR. NPN 2SC1815-YTPE2 TSB	TAPING 26MM	Q033,004,103,108,113 114,116,309,407,408, 419,420,545,603,552, 556,559,561,703,708, 709,710,802,809-819, 931,935-937,939,940	40	pcs

PARTS NO.	DESCRIPTION	SPECIFICATION	SYMBOL NO.	QTY	UM
6621016701	TR. NPN HF 2SC2240-GR TSB	TOSHIBA, LOW NOISE	Q411,412,415,416,451 452,601,602	8	pcs
6621018700	TR. NPN HF 2SC2878-A TSB	TOSHIBA, LOW NOISE, 0.5W	Q311,312	2	pcs
6621034200	TR NPN 2SC3281-OW/ACC TSB	VCEO=200V IC=15A PC=150W	Q439,440	2	pcs
6621034330	TR NPN 2SC2602G MIT	NF=1.8DB PC=0.5W TAPING	Q201-204	4	pcs
6621034430	TR NPN HF SYO	2SC3467E HFE=100-200 T	Q423,424,431,432	4	pcs
6621034500	TR NPN 2SC3066G SYO	VCEO=120V PC=0.2W	Q403,404	2	pcs
6621034600	TR PNP 2SC3423Y TSB	VCEO=150V PC=1.2W HFE=12	Q425,426	2	pcs
6621034830	TR NPN 2SC3329BL TSB	VCEO=80V IC=0.1A TAPING	Q201-204	0	pcs
6621034900	TR NPN HF 2SC123BLS SYO	80V 12A M:IS-20MA B:C	Q441;442	2	pcs
6621035000	TR NPNHF 2SC2344E SYO	160V 1.5A M:IS-313A B:M	Q435,436	2	pcs
6622012802	TR NPN LF 2SD669AC W/ACC HIT	VCEO=160V PC=1W TO126	Q501	1	pcs
6622019030	TR NPN 2SD1207T TAPING SYO	VCEO=-50V IC=-2A PC=1W	Q445,446	2	pcs
6623002020	TR NSI TOR,PNP HF TSB	2SA1015-Y	Q554	1	pcs
6623002050	TR. PNP HF 2SA1015-YTPE2 TSB	TAPING 26MM	Q006,115,206-208,310 405,406,417,418,503, 504,508,606,705,804, 805-807,938	21	pcs
6623002300	TRANSISTOR,PNP HF	2SA562-Y TV	Q553,560,562	3	pcs
6623005000	TRANSISTOR,PNP HF	2SA970-GR	Q409,410,413,414,449 450,603,604	8	pcs
6623011200	TR PNP 2SA1302-0 W/ACC TSB	VCBO=-200V IC=-15A 150W	Q437,438	2	pcs
6623011300	TR PNP 2SA1239G SYO	VBCO=-120V PC=0.2W	Q401,402	2	pcs
6623011530	TR PNP HF SYO	2SA1370E HFE=100-200T	Q421,422,429,430	4	pcs
6623011600	TR PNP 2SA1011E SYO	-160V -1.5A M:IS-313A B:M	Q433,434	2	pcs
6624009401	TR PNP 2SB649A-C HIT	VCEO=-160V PC=1W TO126	Q502,505,506	3	pcs
6624010630	TR PNP 2SB8892T TAPING SYO	VBCO=-50V IC=-2A PC=1W	Q447,448	2	pcs
6624010800	TR PNP 2SB922LS SYO	-80V -12A M:IS-20MA B:C	Q443,444	2	pcs
6625000701	TRANSISTOR, UNIPOLOR JFET	2SK30A-GR	Q005	1	pcs
6625003730	TR FET 2SK363GR TSB	VGDS=-40V 0.4W TAPING	Q301-304,307,308	6	pcs
6640007500	IC REG L78M15 SYO	15V 0.5A	Q551	1	pcs
6640007600	IC REG L78M05 SYO	5V 0.5A	Q557	1	pcs
6644020800	IC TA-7317P TSB	PROTECTION CKT	Q605	1	pcs
6644055800	IC,LINEAR LA3401 SYO	FM MPX PLL DIP22	Q112	1	pcs
6644066600	IC LIN NJM2043D JRC	LIN PRE AMP *2 DIP 8	Q211,305,306,313	4	pcs
6644066700	IC LIN NJM2068D JRC	LIN OP AMP *2 DIP 8	Q001,002,007	3	pcs
6644066800	IC LIN LA1222 SYO (phase out)	FM IF AMP DIP 8	Q104,105	2	pcs
6644066900	IC LIN LA1235 SYO	FM IF AMP DIP 16	Q106	1	pcs
6644067000	IC LIN LA1245 SYO	AM TUNER DIP 20	Q109	1	pcs
6644067100	IC LIN LB1645N SYO	MOTOR DRIVER SIP 10	Q902	1	pcs
6644067300	IC LIN BA6104 ROH	5 LED LEVEL METER SIP 9	Q701	1	pcs
6645004000	IC LB-1450 SYO	TUNING INDICAT	Q702	1	pcs
6645017600	IC DIG MOS TC9147BP TSB	DTS-8 7-SEG DISP DIP 42	Q932	1	pcs
6645017700	IC,DIGITAL TD6104P TSB	FREQ DIVIDER 1/30 SIP 7	Q934	1	pcs
6645017800	IC,DIGITAL TD6301AP TSB	S DRIVER FOR DTS-8 DIP28	Q704	1	pcs
6645017901	IC DIG MOS UP06360C NEC	ELEC SWITCH 2C2P DIP 14	Q314	1	pcs
6645019800	IC DIG LC4001B SYO	2 I/P NOR GATE X4 DIP14	Q901,941	2	pcs
6645019801	IC DIG MOS TC4001BP TSB	2 I/P NOR GATE X2 DIP14	Q901,941	0	pcs
6645020000	IC DIG MOS UP06362C NEC	ELEC SWITCH 4C2P DIP22	Q209,210	2	pcs
6646052900	IC DIG TC74HC164P TSB	8 BIT SHIFT REGIST DIP14	Q820	1	pcs
6647042300	IC MEM UPD7507CU-240 NEC	4 BIT MICOM DIP 40	Q801	1	pcs
6699001404	CRYSTAL TATUNG	7.2MHZ 16PF 2MW	X931	1	pcs
6707020100	INSULATION TUBING PVC UL CSA	600V T=105 AWG18 BLK 0.51	J641,642	0.04	M
6707020290	INSULATION TUBING PVC UL CSA	600V T=105 AWG9 BLK 2.9	J645-648	0.08	M
6707020520	INSULATION TUBING PVC UL CSA	600V T=105 AWG4 BLK 5.2	J142	0.13	M
6910151403	BATTER,DRY	1.5V UM-3	P001	1	pcs
7000305012	SCREW BTBW M3*8 S-ZN-CC	M3*8 S-ZN-CC	7S36,7S37	2	pcs
7000305022	SCREW BTBW M3*10 S-AN-CC	M3*10 S-AN-CC	7S32-7S35	4	pcs
7000311122	SCREW ISO PPW M4*10 S-ZN-CC	M4*10 S-ZN-CC	7T01-7T04	4	pcs
7001120216	SCREW	C PAN M2.5*4 MS PC	7B31,7B32	2	pcs
7001170612	SCREW ISO PP M3*6 S-ZN-CC	C PAN M3*6 MS ZN-CC	7F15-7F20	6	pcs
7001170616	SCREW ISO PP M8*6 S-PC	C PAN M3*6 MS PC	7B29,7B30	2	pcs
7033161152	SCREW BPB M3*8 S-ZN-CC	C PAN 300B TS ZN-CC	7S20-7S23	4	pcs
7033160652	SCREW BRB M3*6 S-ZN-CC	C RUD 3006 TS ZN-CC	7C01-7C19,7F21-7F27, 7S38-7S45,7T13,7T14	36	pcs
7033161156	SCREW BRB M3*8 S-PC	C RUD 300B TS RC	7B03-7B24,7B38-7B48, 7B53-7B56,7F01-7F07, 7F13,7F14,7S15-7S19, 7S24-7S29	57	pcs
7033161452	SCREW BRB M3*10 S-ZN-CC	C RUD 3010 TS ZN-CC	7S01-7S14	14	pcs
7033251452	SCREW BRB M4*10 S-ZN-CC	C RUD 4010 TS ZN-CC	7S30,7S31	2	pcs
7076260012	NUT ISO NHEB M4*3.2H SZN-CC	M4*3.2H SZN-CC	7T09-7T12	4	pcs
7096210006	WASHER MW3.5 S-PC	3.7 * 9 * 0.5	7B37	1	pcs
7098250002	SPRING WASHER SW4 S-ZN-CC	SW 4 ZN-CC	7T05-7T08	4	pcs
7101200352	WASHER,TOOTH LOCK-EXT M3.5	M3.5 S-ZN-CC	7B02	2	pcs
7101201202	LOCK WASHER	D21*d12*1.2t	7B01	1	pcs
7190550003	SCREW ISO PPW ZN-PC (BLK)	M4*6 (10*3.6*1 t)	7T15-7T20	6	pcs
9510680155	RS CARTON NAD-7100	E 198* 536* 455WDBS18.0	1P07	1	pcs
9510685155	SHEET NAD-7100	242 * 81 BBS12.0	1P06	1	pcs
9510686155	RS CARTON NAD-7100	E 454* 556* 475 DBS18.0	1P08	0.5	pcs
9520680155	EPS PAD-L NAD-7100	445* 178* 106 SG0.018	1P03	1	pcs
9520680255	EPS PAD-R NAD-7100	445* 178* 106 SG0.018	1P04	1	pcs
9530520155	PRINT PE BAG	0.04* 600* 525	1P05	1	pcs
9530680155	EPE BAG NAD-7100	1* 45* 440* 105	1P11	1	pcs
9554100400	PE BAG	0.04* 250* 100	1P12	1	pcs
9554130900	PE BAG	0.04* 325* 225	1P10	1	pcs

EXPLODED VIEW

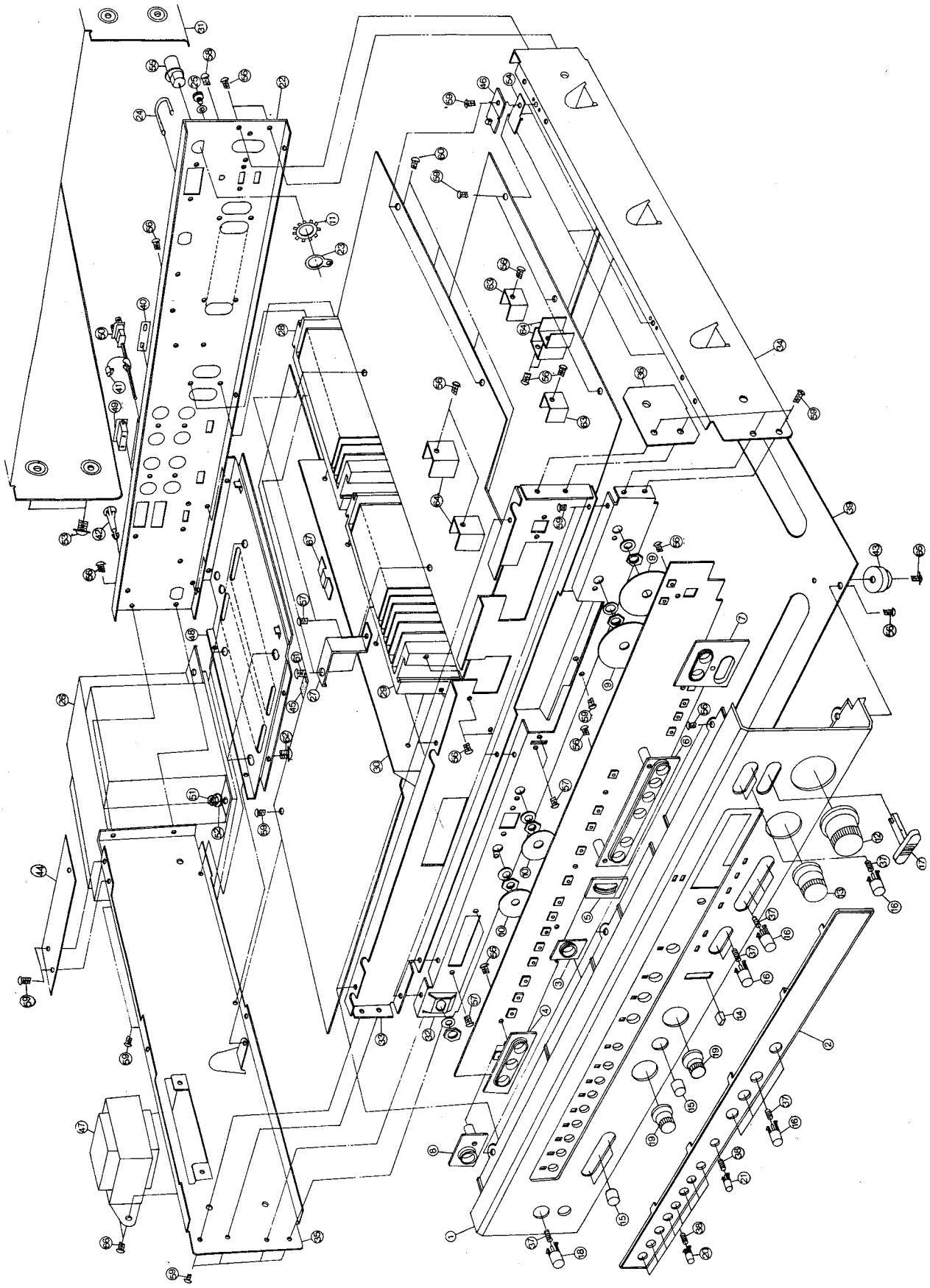

NAD-7100 EXPLODED PARTS LIST :

ITEM	PARTS NO.	PARTS NAME	Q'TY
1	5541213100	FRONT PANEL	1
2	5542909400	RECEIVER WINDOW	1
3	5542225000	BEZEL (A)	1
4	5542225100	BEZEL (B)	1
5	5542225200	BEZEL (C)	1
6	5542225300	BEZEL (D)	1
7	5542225800	DOUBLE BEZEL	1
8	5542225400	POWER BEZEL	1
9	5542006110	HEMELON (L)	2
10	5542006100	HEMELON (S)	2
11	7101201202	LOCK WASHER	1
12	5541537900	VOL. KNOB	1
13	5541538000	VOL. KNOB (S)	1
14	5541537800	TOGGLE CAP	1
15	5541537700	PUSH BUTTON	4
16	5541537300	BAND KNOB	12
17	5541537600	PLAY BUTTON	1
18	5541537200	POWER KNOB	1
19	5541537500	CONTROL KNOB	2
20	5541537100	PUSH KNOB (S)	8
21	5541537110	PUSH KNOB (S)	1
22	5547131900	BACK PLATE	1
23	5547033900	LUG	1
24	5547033600	TERMINAL CONNECTOR	2
25	5546121400	TERMINAL	1
26	5561317000	TRANSFORMER (L)	1
27	5547033700	TUNER HOLDER	2
28	5545307800	HEAT SINK (A)	1
29	5545307810	HEAT SINK (B)	1
30	5545307700	TRANSISTOR HOLDER	1
31	5541002300	TOP COVER	1
32	5547131500	FRONT BRACKET (A)	1
33	5547132000	FRONT BRACKET (B)	1
34	5547131700	RIGHT PLATE	1
35	5547131600	LEFT PLATE	1
36	5547033800	RIGHT BRACKET PLATE	1
37	5546323000	PLAY SPRING	13
38	5546322900	PUSH SPRING	9
39	5547131800	CHASSIS	1
40	5547528400	PLATE,SWITCH LOCK (PVC)	1
41	5547501200	BUSHING, POWER CORD	2
42	5547530400	HOLDER-PCB	3
43	5547802120	FOOT	4
44	5545403700	SHIELD COVER	1
45	5532410700	SPACER	2
46	5419700191	HINGE	2
47	5561317020	TRANSFORMER (S)	1
48	5547131100	TRS. PLATE	1
49	5556308320	AC OUTLET	2
50	5556702130	POWER PLUG	1
51	7076260012	NUT 4	4
52	7098250002	WASHER	4
53	7190550003	M4x6 MS	6
54	5547035800	AUX. PLATE	2
55	5556205300	TERMINAL	1
56	7033161156	RUD M3x8 TS	47
57	7001171116	PAN M3x8 MS	6
58	7001120216	PAN M2.5x4 MS	2
59	7033160652	RUD M3x6 TS	35
60	7031161452	PAN M3x10 MS	4
61	7033251452	RUD M4x10 TS	2
62	7000311142	RUD M4x14 TS	4
63	5545306900	HEAT SINK	2
64	5545306910	HEAT SINK (S)	4
65	7000305022	M3x10 TS	4
66	7000305012	M3x8 TS	2
67	5547034000	THERMAL PROTECTOR HOLDE	2

PACKING DIAGRAM

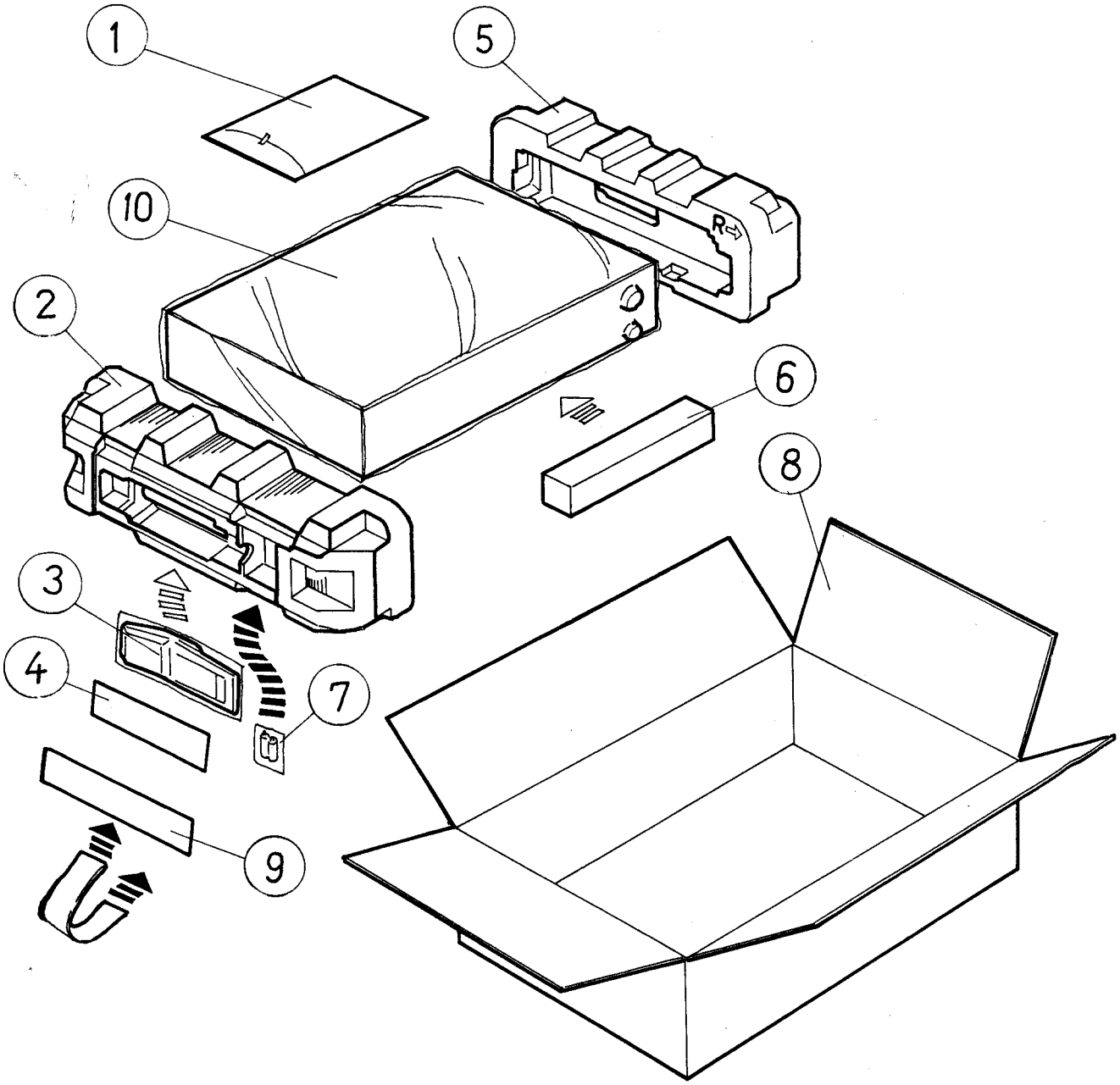

PACKING LIST FOR NAD-7100

ITEM	PARTS NO.	NAME	QTY
1	5535122011	OWNERS MANUAL	1
2	9520680155	POLYLON L.	1
3	5552000200	REMOTE CONTROL TRANSMITTER	1
4	- - - - - -	R/C TRANSMITTER MANUAL	1
5	9520680255	POLYLON R.	1
6	9520685155	POLYLON BAR	1
7	6910151403	BATTER, DRY	1
8	9510680155	CARTON	1
9	9510685155	PAPER PLATE	1
10	9530680155	EPE BAG	1