3-MOTOR 4-HEAD TAPE DECK

RT-707

SERVICE MANUAL

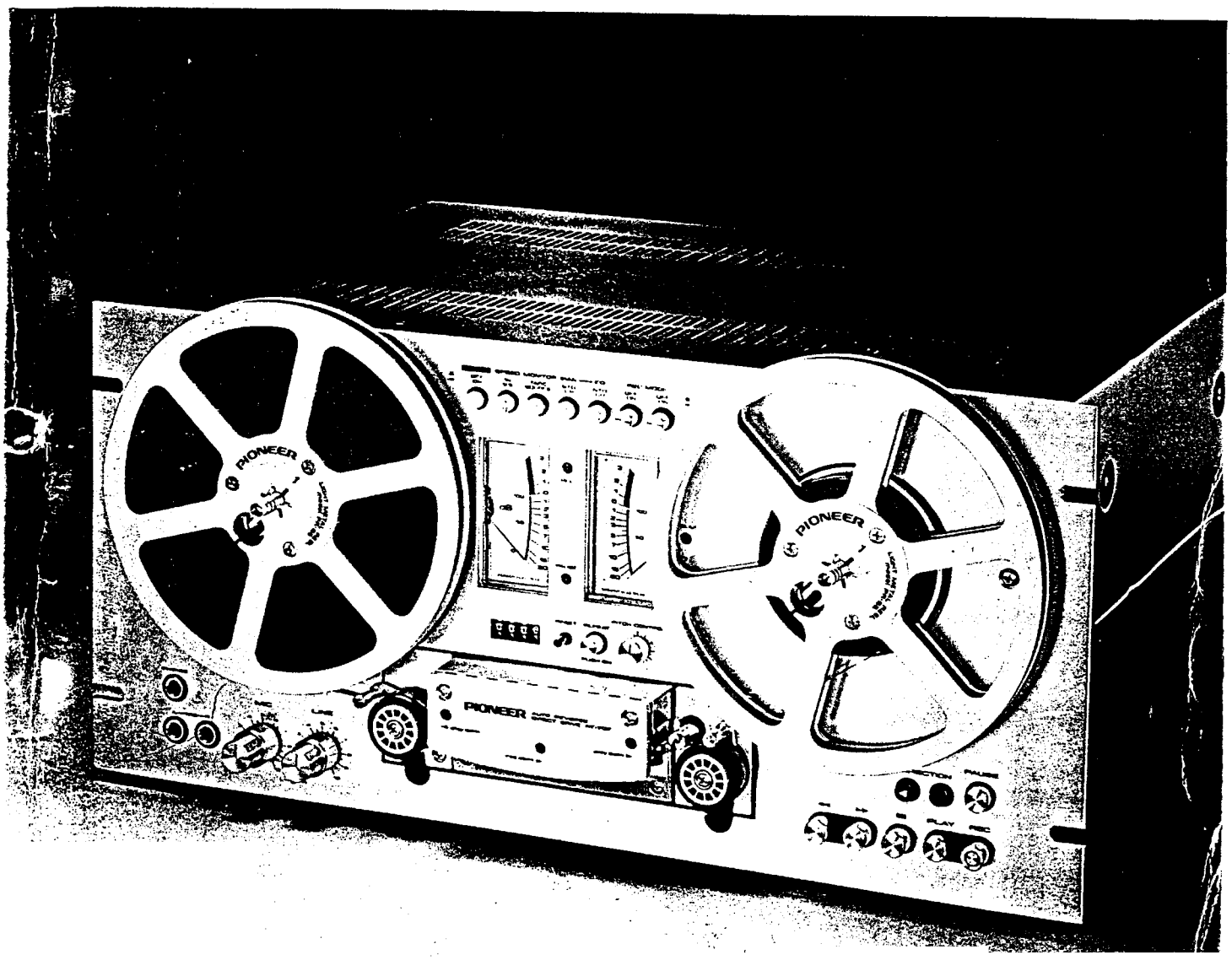

www.manualscenter.com

PIONEER

ake assembly R

NOTE:
Parts indicated in green type cannot be supplied.

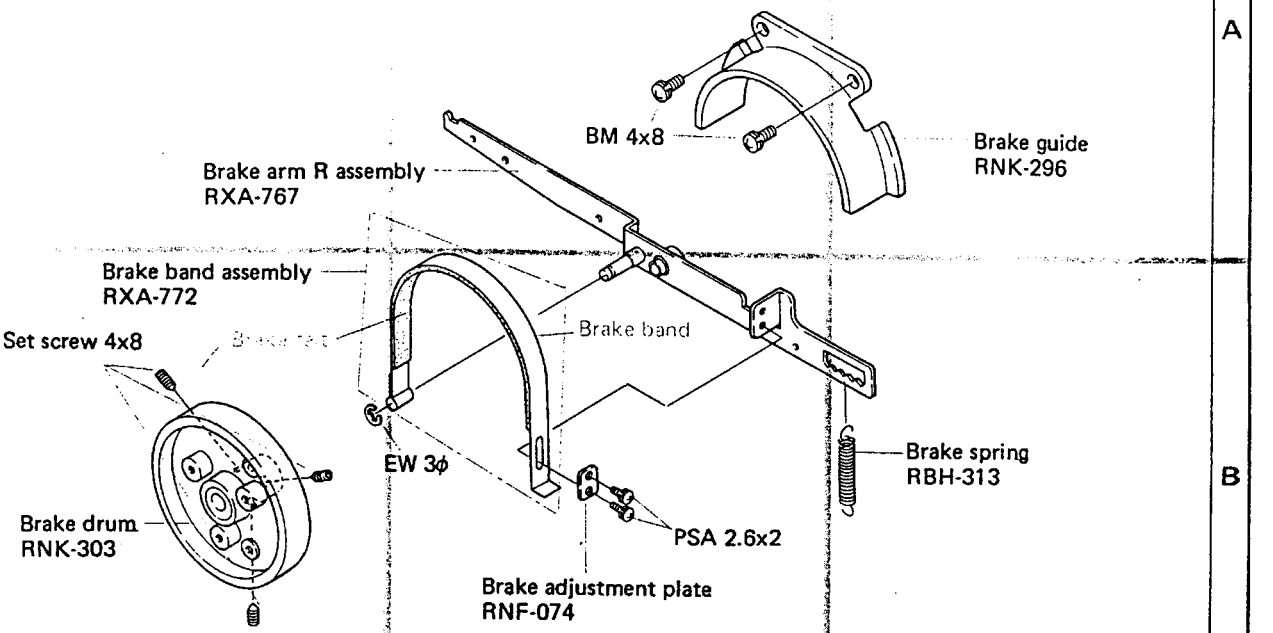

For Service Manuals
MAURITRON SERVICES
8 Cherry Tree Road, Chinnor
Oxfordshire, OX9 4QY.
Tel (01844) 351694
Fax (01844) 352554
email:- sales@mauritron.co.uk

Brake assembly L

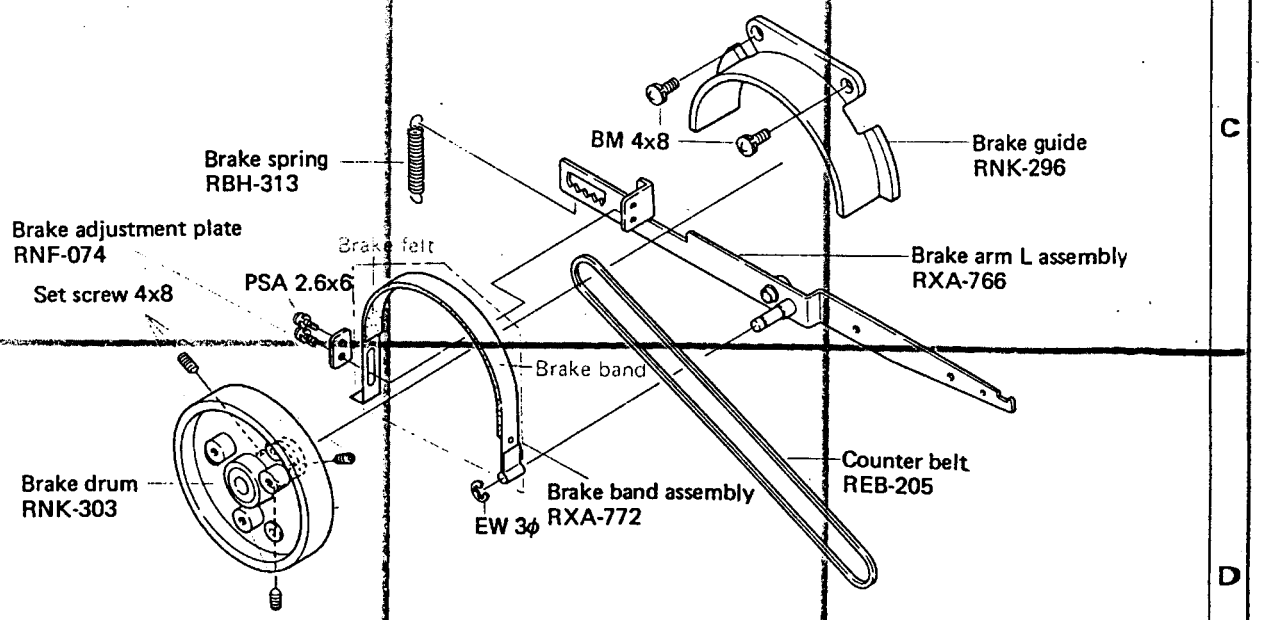

www.manualscenter.com

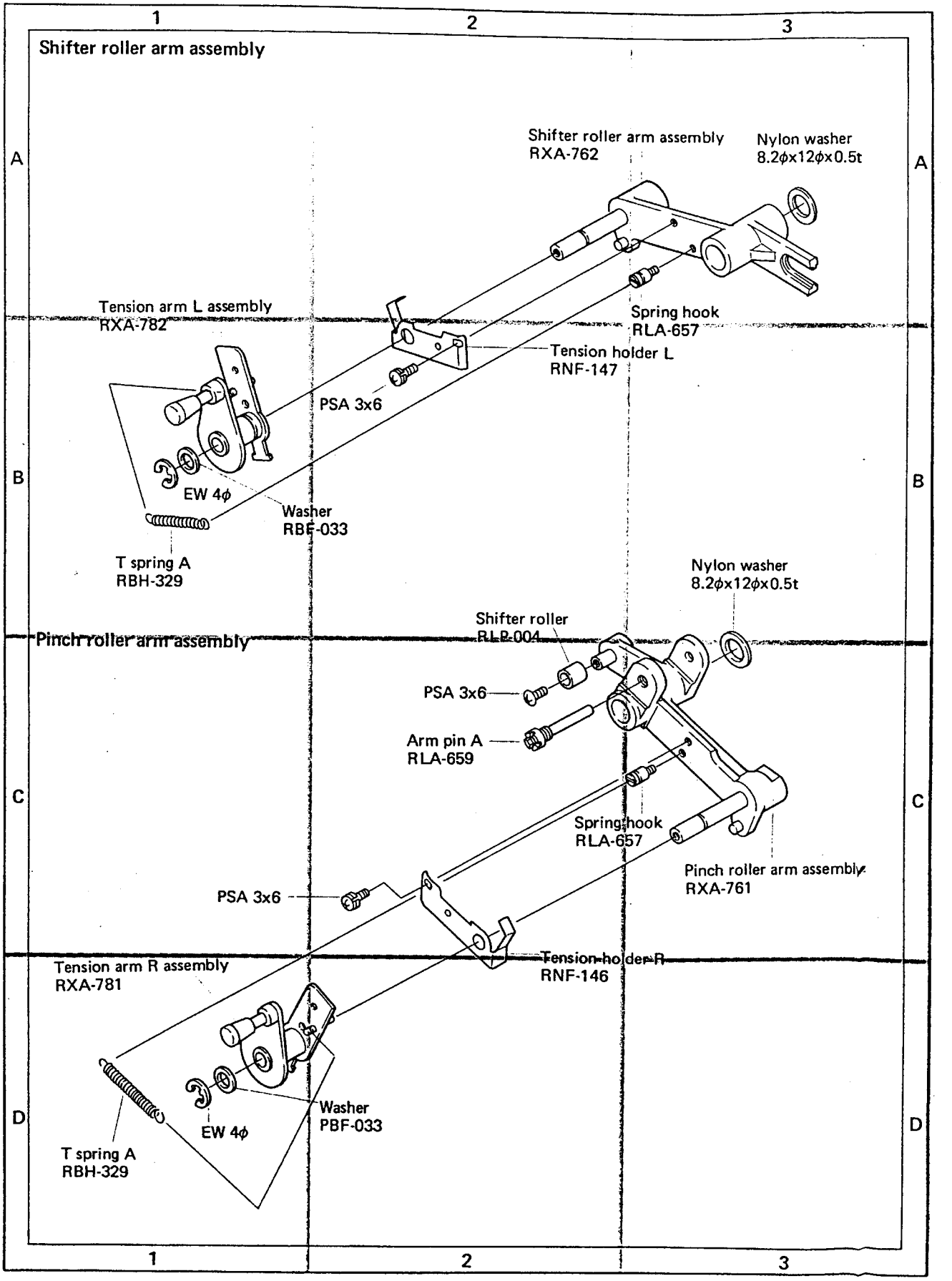

www.manualscenter.com

Solenoid (BRAKE) assembly

NOTE:
Parts indicated in green type cannot be supplied.

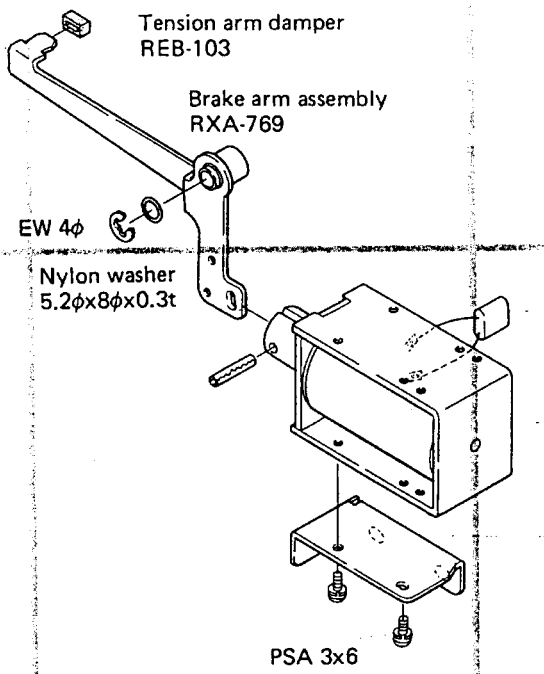

Tape counter assembly

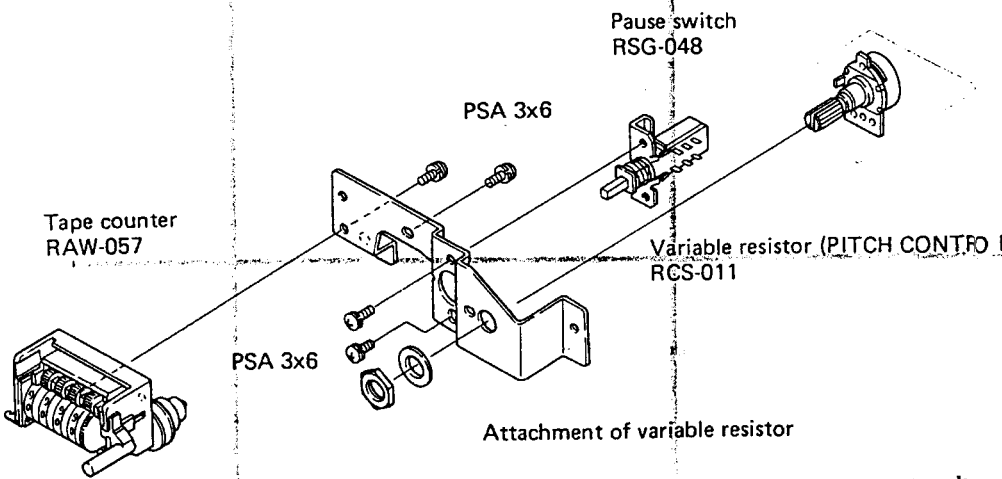

For Service Manuals
MAURITRON SERVICE
8 Cherry Tree Road, Chinnor
Oxfordshire, OX9 4QY
Tel (01844) 351694
Fax (01844) 352554
email:- sales@mauritron.co.uk

www.manualscenter.com

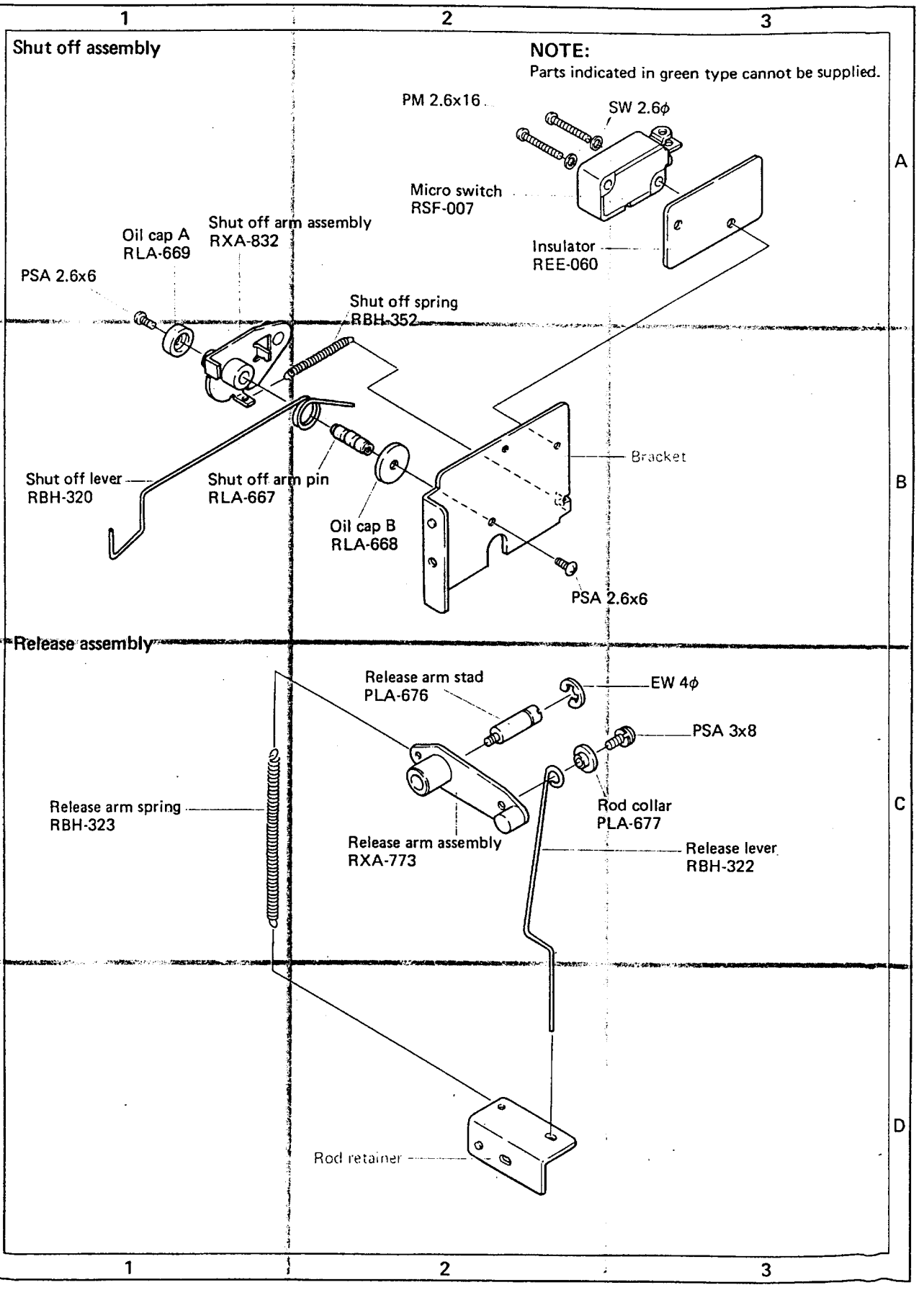

www.manualscenter.com

Solenoid (PINCH) assembly

NOTE:
Parts indicated in green type cannot be supplied.

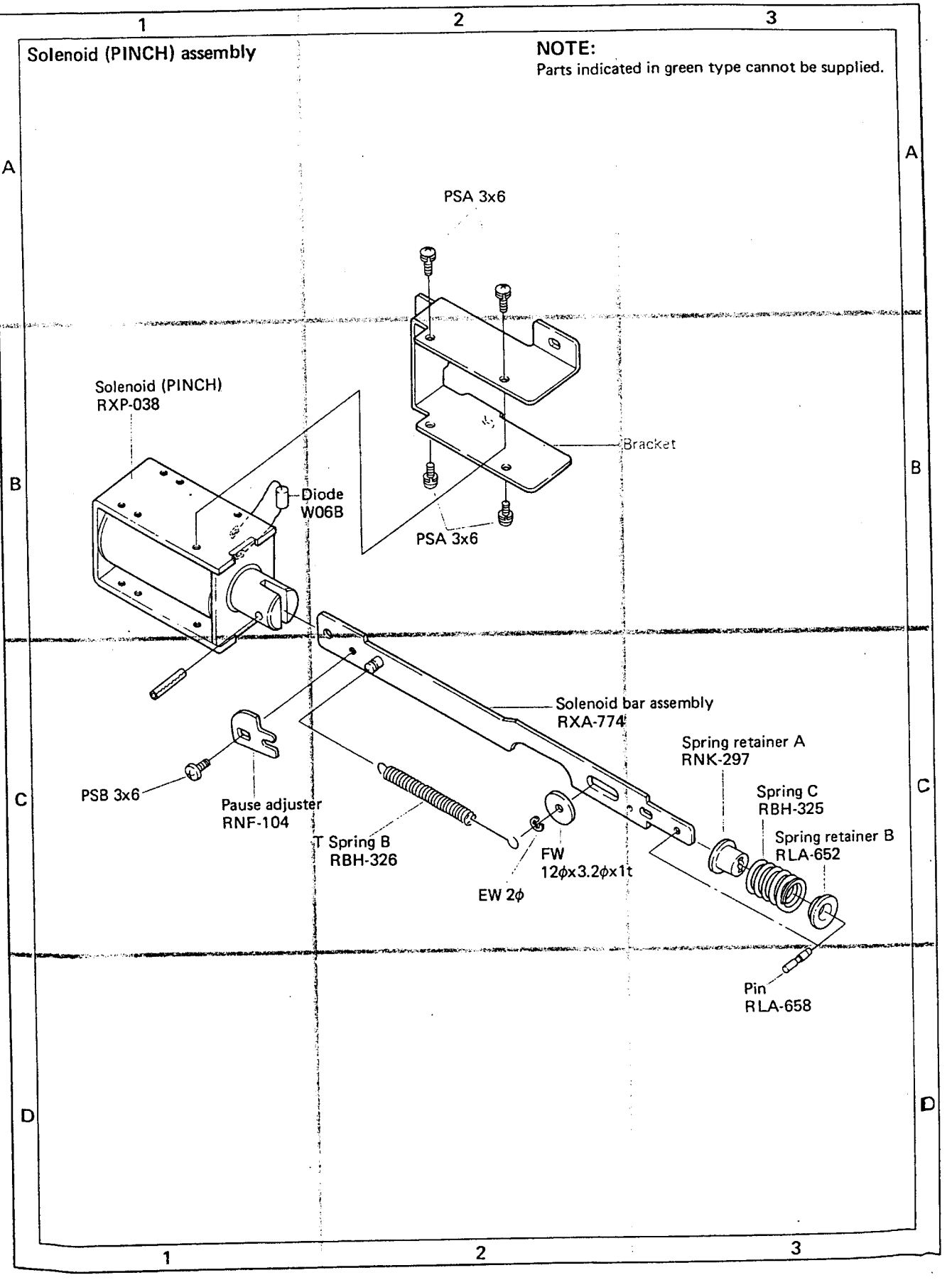

www.manualscenter.com

Head assembly

NOTE:
Parts indicated in green type cannot be supplied.

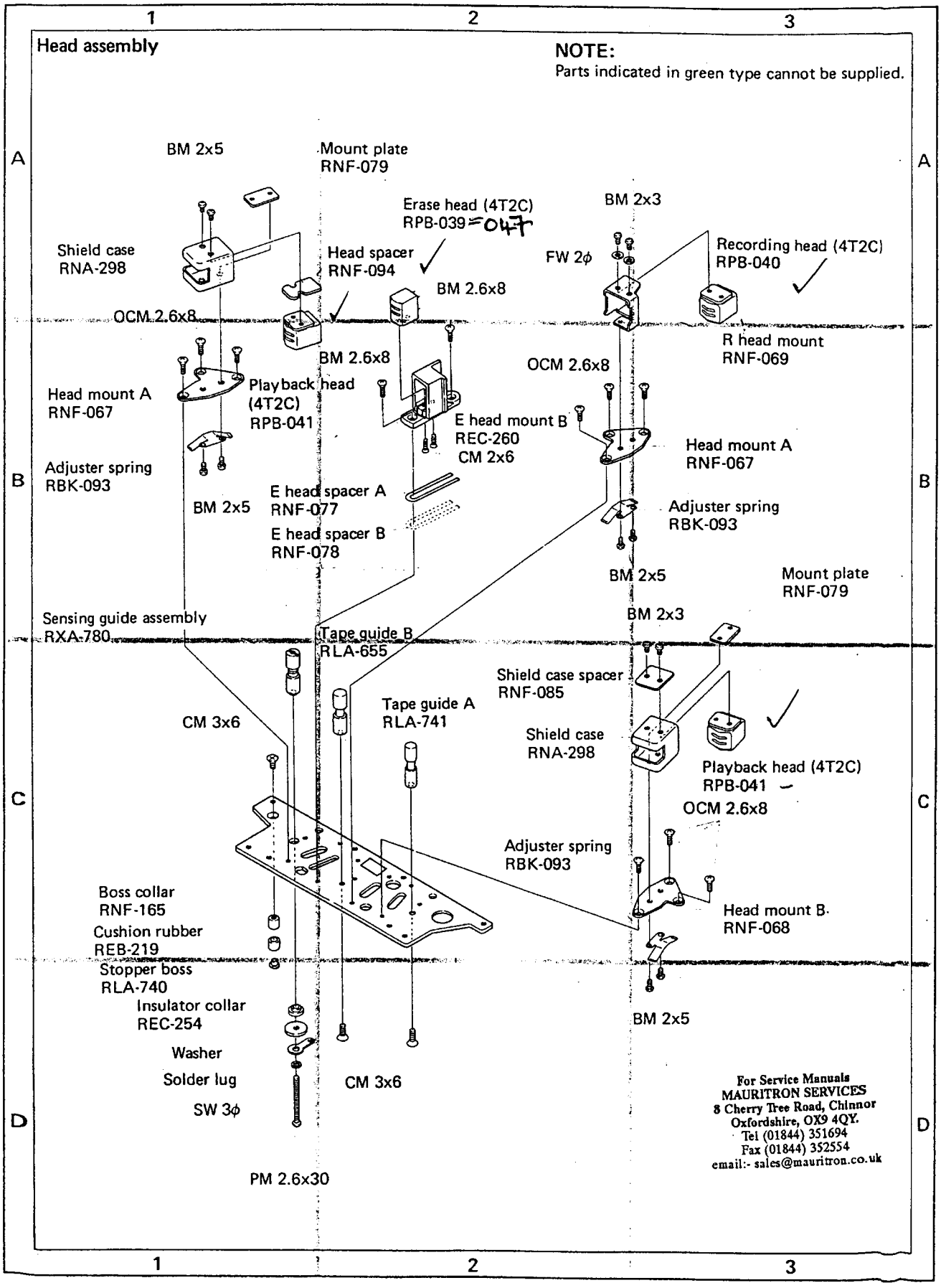

For Service Manuals
MAURITRON SERVICES
8 Cherry Tree Road, Chinnor
Oxfordshire, OX9 4QY.
Tel (01844) 351694
Fax (01844) 352554
email:- sales@mauritron.co.uk

www.manualscenter.com

ont side view of mechanism chassis

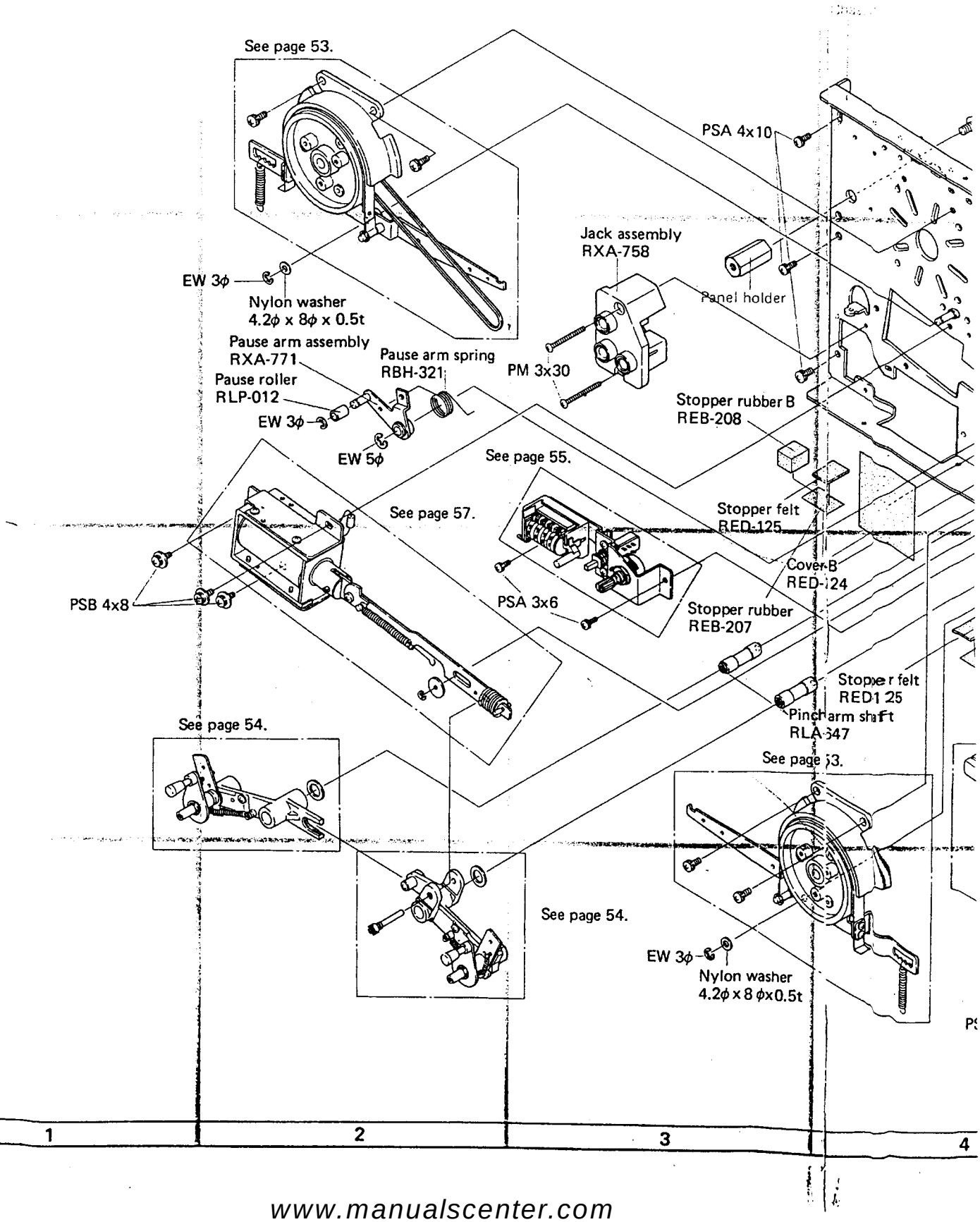

www.manualscenter.com

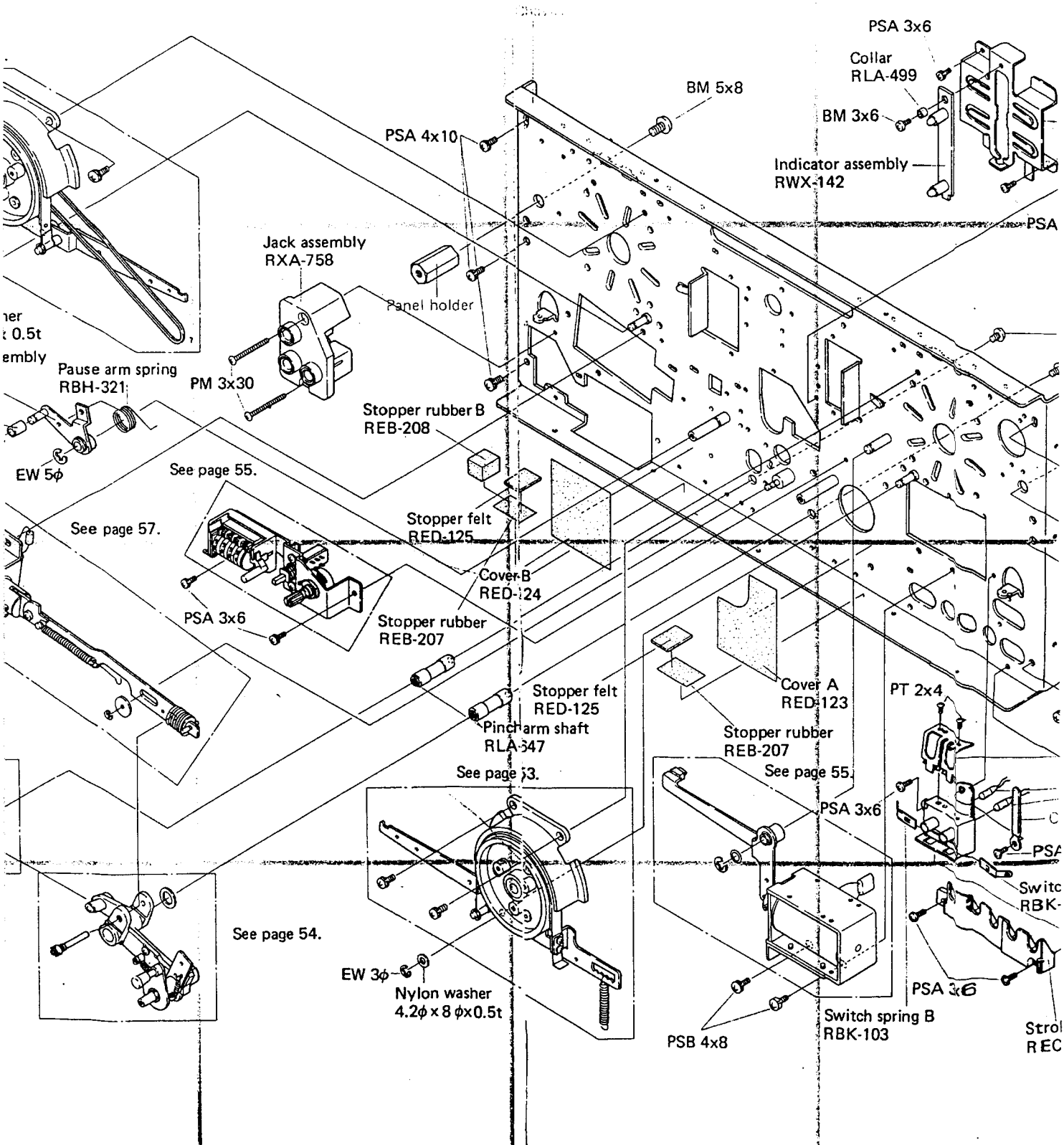

www.manualscenter.com

NOTE:
Parts indicated in green type cannot be supplied.

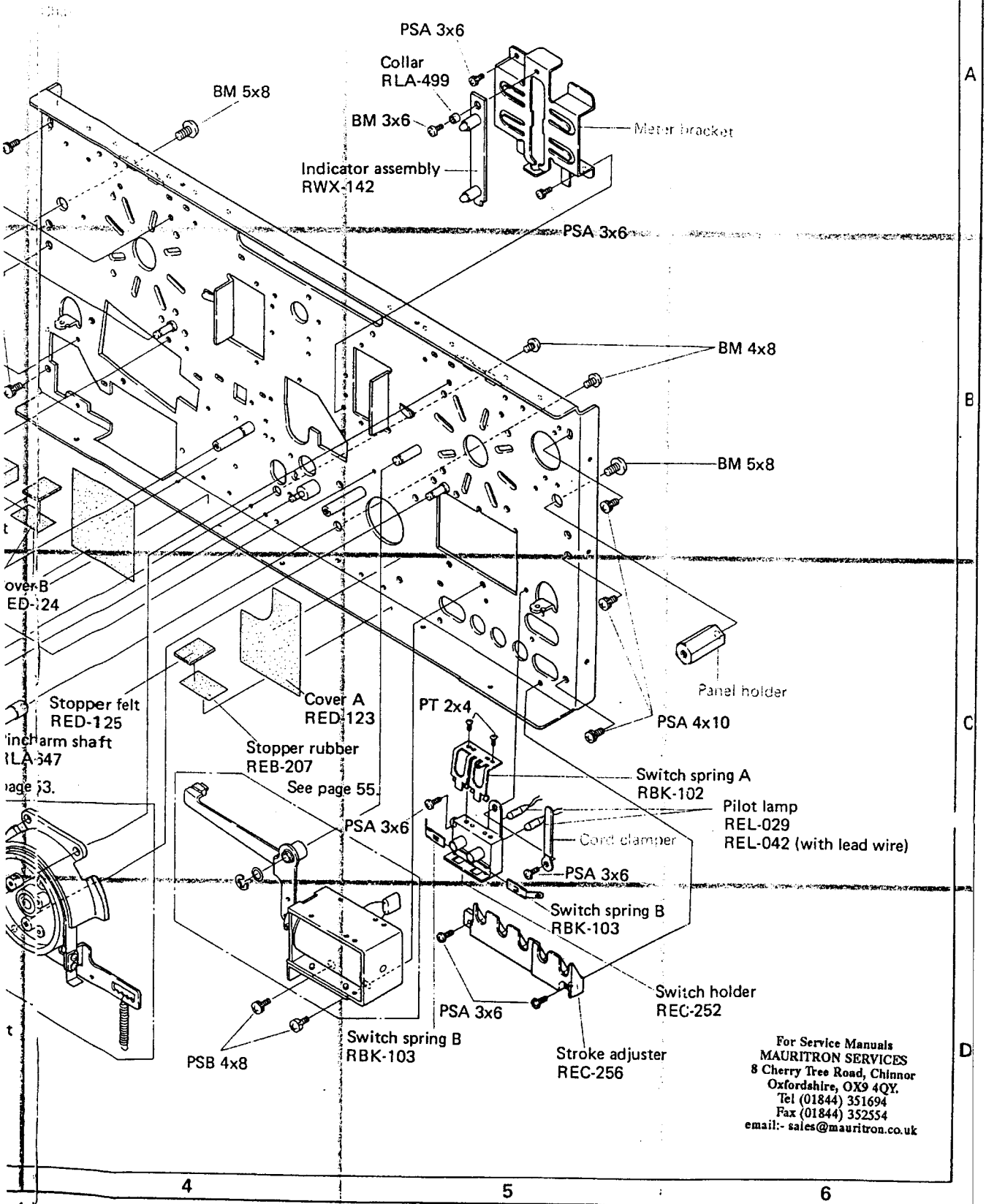

For Service Manuals
MAURITRON SERVICES
8 Cherry Tree Road, Chinnor
Oxfordshire, OX9 4QY.
Tel (01844) 351694
Fax (01844) 352554
email:- sales@mauritron.co.uk

www.manualscenter.com

Rear side view of mechanism chassis

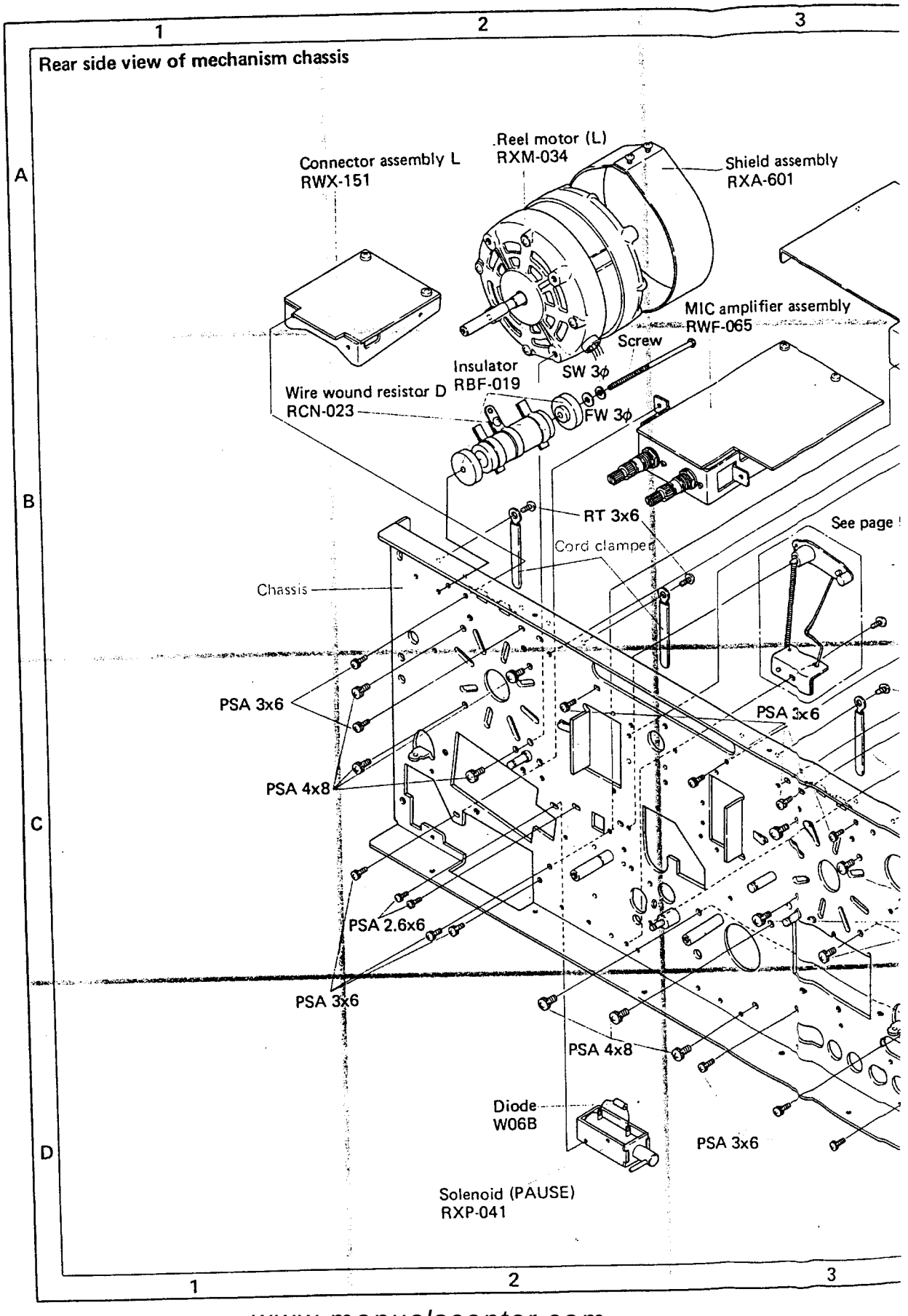

www.manualscenter.com

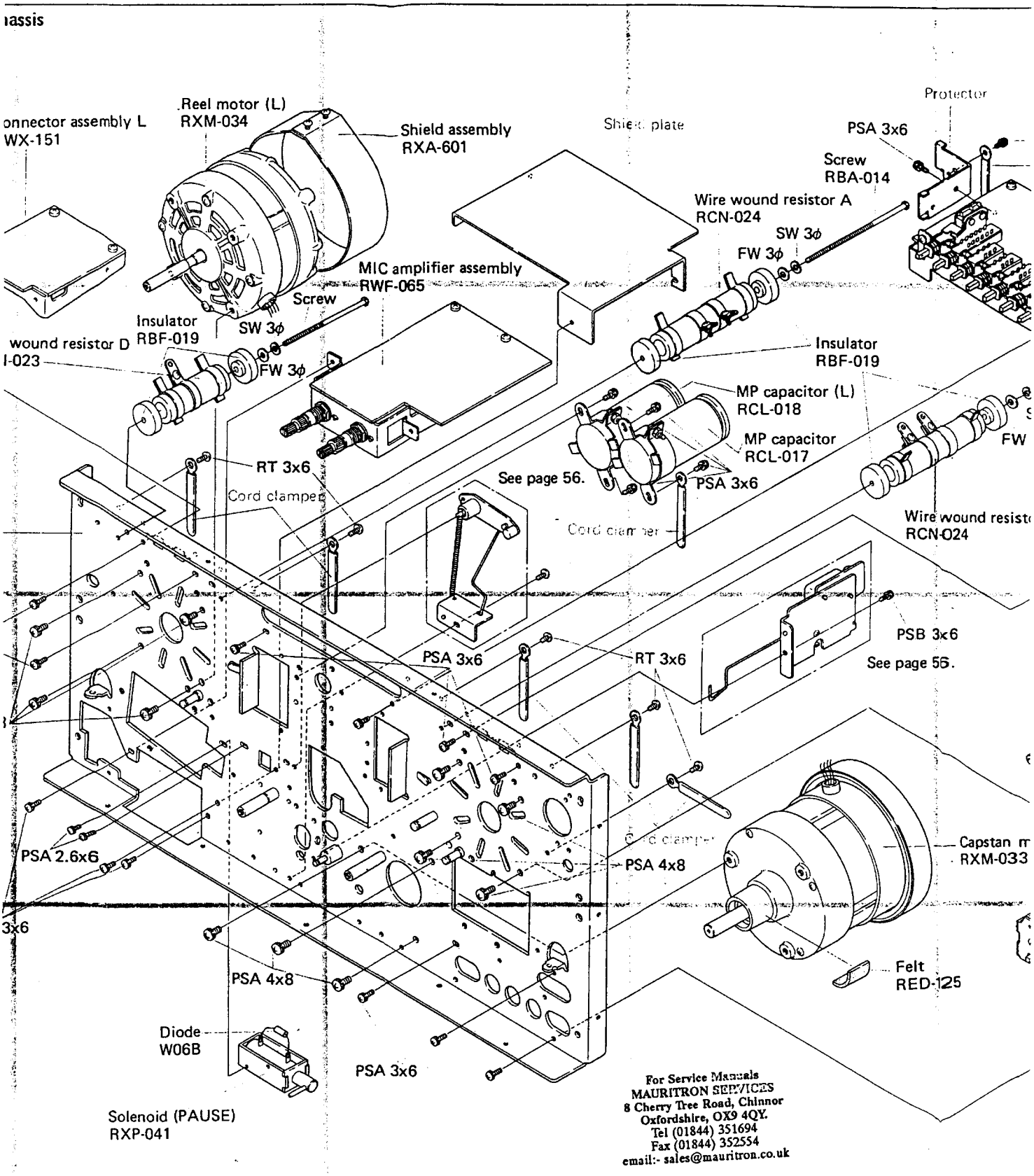

For Service Manuals
MAURITRON SERVICES
8 Cherry Tree Road, Chinnor
Oxfordshire, OX9 4QY.
Tel (01844) 351694
Fax (01844) 352554
email:- sales@mauritron.co.uk

www.manualscenter.com

NOTE:
Parts indicated in green type cannot be supplied.

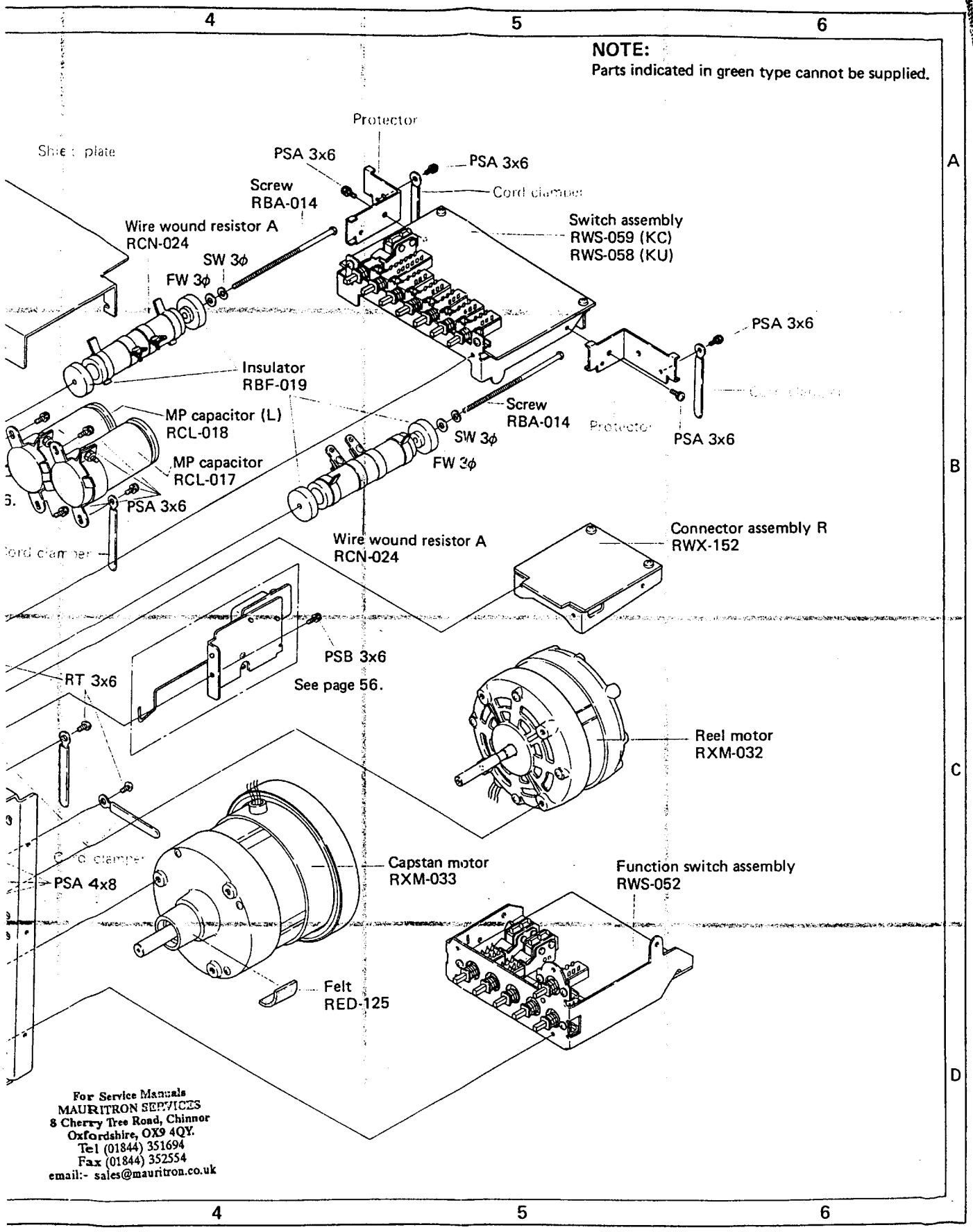

For Service Manuals
MAURITRON SERVICES
8 Cherry Tree Road, Chinnor
Oxfordshire, OX9 4QY.
Tel (01844) 351694
Fax (01844) 352554
email:- sales@mauritron.co.uk

www.manualscenter.com

13.4 SCHEMATIC DIAGRAM

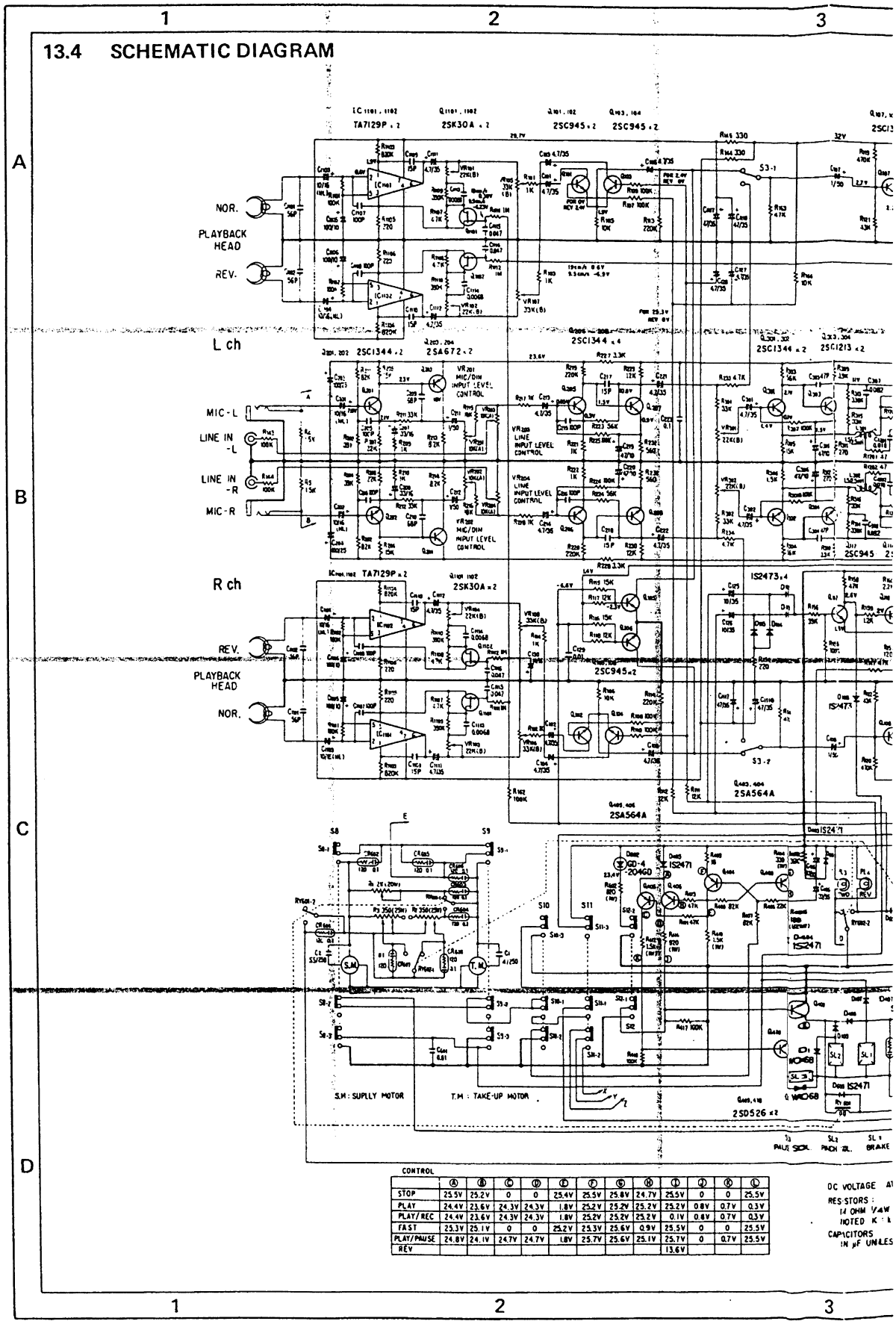

CONTROL

	Ⓐ	Ⓑ	Ⓒ	Ⓓ	Ⓔ	Ⓕ	Ⓖ	Ⓗ	Ⓘ	Ⓙ	Ⓚ	Ⓛ
STOP	25.5V	25.2V	0	0	25.4V	25.5V	25.8V	24.7V	25.5V	0	0	25.5V
PLAY	24.4V	23.6V	24.3V	24.3V	1.8V	25.2V	25.2V	25.2V	25.2V	0.8V	0.7V	0.3V
PLAY/REC	24.4V	23.6V	24.3V	24.3V	1.8V	25.2V	25.2V	25.2V	0.1V	0.8V	0.7V	0.3V
FAST	25.3V	25.1V	0	0	25.2V	25.3V	25.6V	0.9V	25.5V	0	0	25.5V
PLAY/PAUSE	24.8V	24.1V	24.7V	24.7V	1.8V	25.7V	25.6V	25.1V	25.7V	0	0.7V	25.5V
REV									13.6V			

DC VOLTAGE A
RESISTORS :
1/4 OHM 1/4W
NOTED K : k
CAPACITORS
IN μF UNLES

www.manualscenter.com

DIAGRAM

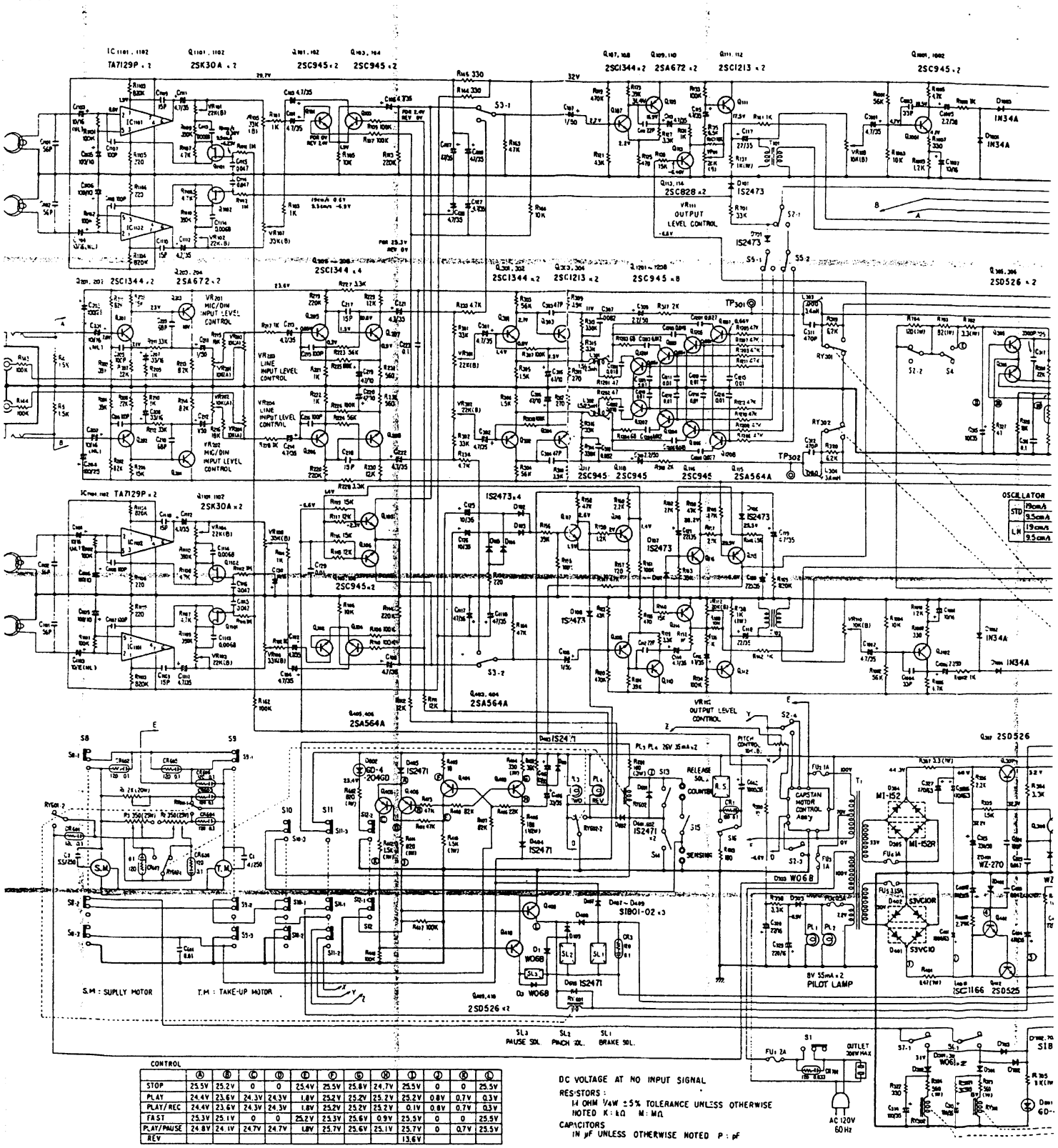

CONTROL

	Ⓐ	Ⓑ	Ⓒ	Ⓓ	Ⓔ	Ⓕ	Ⓖ	Ⓗ	Ⓘ	Ⓙ	Ⓚ	Ⓛ
STOP	25.5V	25.2V	0	0	25.4V	25.5V	25.8V	24.7V	25.5V	0	0	25.5V
PLAY	24.4V	23.6V	24.3V	24.3V	1.8V	25.2V	25.2V	25.2V	25.2V	0.8V	0.7V	0.3V
PLAY/REC	24.4V	23.6V	24.3V	24.3V	1.8V	25.2V	25.2V	25.2V	0.1V	0.8V	0.7V	0.3V
FAST	25.3V	25.1V	0	0	25.2V	25.3V	25.6V	0.9V	25.5V	0	0	25.5V
PLAY/PAUSE	24.8V	24.1V	24.7V	24.7V	1.8V	25.7V	25.6V	25.1V	25.7V	0	0.7V	25.5V
REV									13.6V			

DC VOLTAGE AT NO INPUT SIGNAL

RESISTORS :
1/4 OHM 1/4W ±5% TOLERANCE UNLESS OTHERWISE NOTED K : kΩ M : MΩ

CAPACITORS
IN μF UNLESS OTHERWISE NOTED P : pF

www.manualscenter.com

NOTE:
The indicated semiconductors are representative ones only. Other alternative semiconductors may be used and are listed in the parts lists.

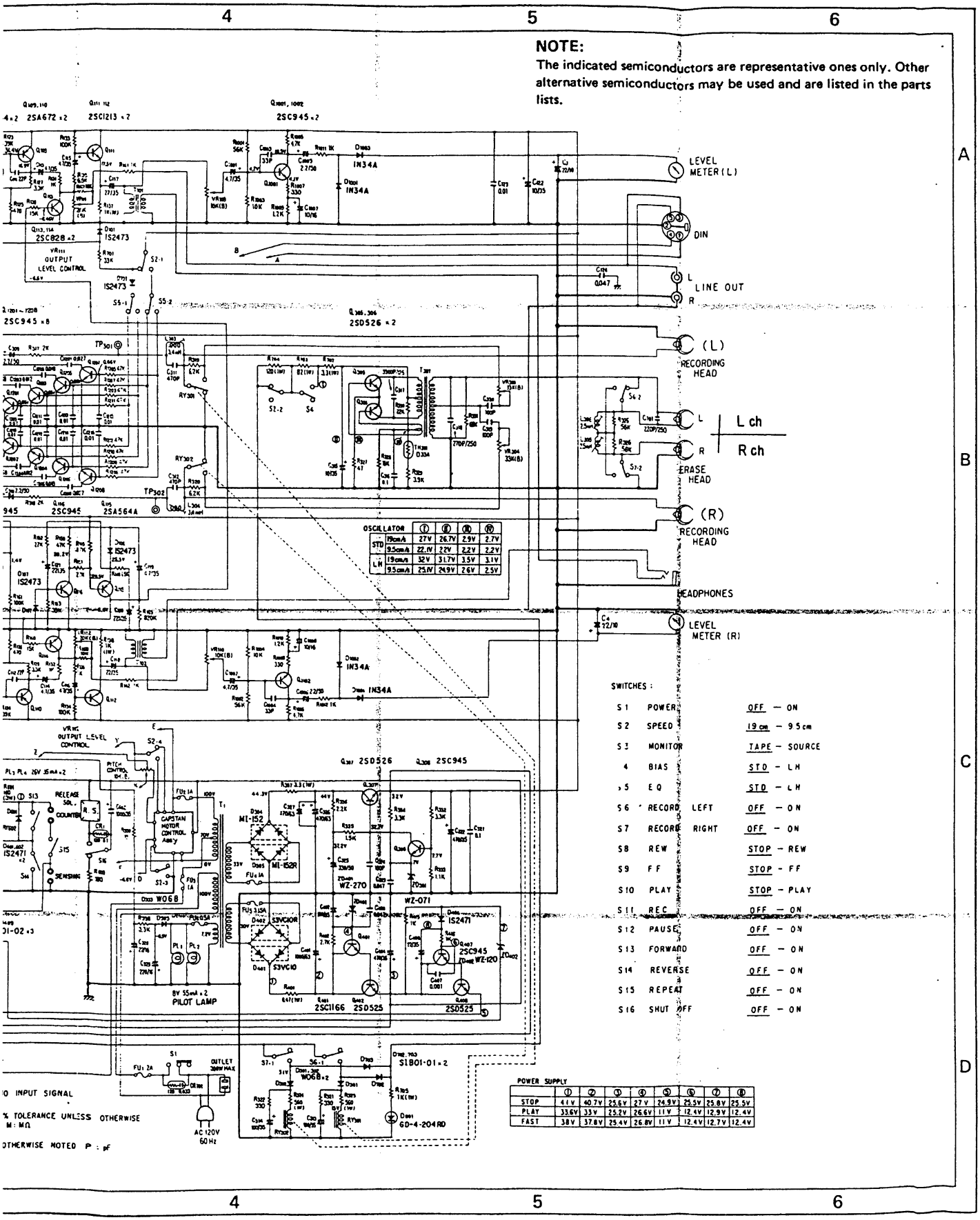

OSCILLATOR		Ⓛ	Ⓒ	Ⓡ	Ⓡ
STD	19cm/s	27V	26.7V	2.9V	2.7V
	9.5cm/s	22.1V	22V	2.2V	2.2V
LH	19cm/s	32V	31.7V	3.5V	3.1V
	9.5cm/s	25.1V	24.9V	2.6V	2.5V

SWITCHES :

S1	POWER		OFF — ON
S2	SPEED		19 cm — 9.5cm
S3	MONITOR		TAPE — SOURCE
4	BIAS		STD — LH
5	EQ		STD — LH
S6	RECORD	LEFT	OFF — ON
S7	RECORD	RIGHT	OFF — ON
S8	REW		STOP — REW
S9	FF		STOP — FF
S10	PLAY		STOP — PLAY
S11	REC		OFF — ON
S12	PAUSE		OFF — ON
S13	FORWARD		OFF — ON
S14	REVERSE		OFF — ON
S15	REPEAT		OFF — ON
S16	SHUT OFF		OFF — ON

POWER SUPPLY

	①	②	③	④	⑤	⑥	⑦	⑧
STOP	41V	40.7V	25.6V	27V	24.9V	25.5V	25.8V	25.5V
PLAY	33.6V	33V	25.2V	26.6V	11V	12.4V	12.9V	12.4V
FAST	38V	37.8V	25.4V	26.8V	11V	12.4V	12.7V	12.4V

www.manualscenter.com