# DENON

Hi-Fi Pre-Main Amplifier

## SERVICE MANUAL

# MODEL PMA-777/757

SOLID STATE
PRE MAIN AMPLIFIER

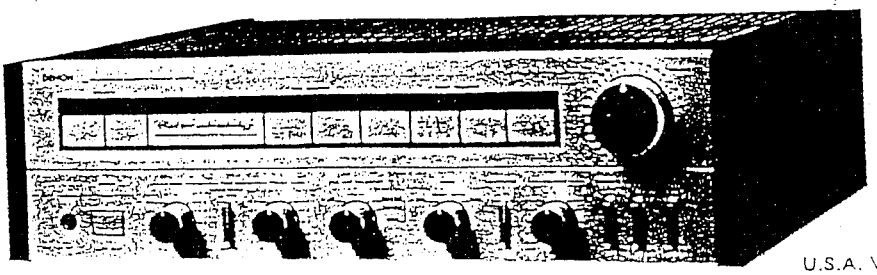

PMA-777

U.S.A. Version Only

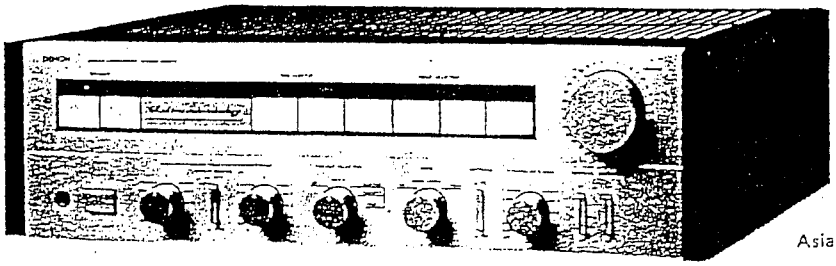

PMA-757

Asia Version Only

CONTENTS


SPECIFICATIONS ..... 2 ~ 3
CONTROLS AND FUNCTIONS ..... 4
CONNECTIONS ..... 5
METHOD OF ADJUSTMENT ..... 6 ~ 7
BLOCK DIAGRAM ..... 8
SEMICONDUCTORS ..... 9
PRINTED WIRING BOARD PATTERNS AND PARTS LIST
P.S & PROTECT UNIT ETC-0740, 0740B ..... 10 ~ 11, 17
INPUT & EQ. UNIT ETC-0739, 0739B ..... 12 ~ 13, 18 ~ 19
TONE & POWER UNIT ETC-0738, 0738B ..... 14 ~ 15, 20 ~ 21
CONNECTION DIAGRAM ..... 16, 22
WIRING DIAGRAM ..... 23, 25
EXPLODED VIEW OF CHASSIS AND CABINET ..... 24, 26


www.manualscenter.com

NIPPON COLUMBIA CO., LTD

**CAUTION**

RISK OF ELECTRIC SHOCK

DO NOT OPEN

CAUTION: TO REDUCE THE RISK OF ELECTRIC SHOCK, DO NOT REMOVE COVER (OR BACK). NO USER SERVICEABLE PARTS INSIDE. REFER SERVICING TO QUALIFIED SERVICE PERSONNEL.

The lightning flash with arrowhead symbol within an equilateral triangle is intended to alert the user of the presence of uninsulated "dangerous voltage" within the product's enclosure that may be of sufficient magnitude to constitute a risk of electric shock to persons.

The exclamation point within an equilateral triangle is intended to alert the user of the presence of important operating and maintenance (servicing) instruction in the literature accompanying the appliance.

WARNING: TO PREVENT FIRE OR SHOCK HAZARD.
DO NOT EXPOSE THIS APPLIANCE TO RAIN OR MOISTURE.

WARNING:

1. Component parts
Parts marked with ⚠ and/or shading in this service manual have special characteristics important to safety. Be sure to use the specified parts for replacement.
2. Leakage current
Before returning the appliance to customer, test the leakage current when the power plug is connected. Use a calibrated (with an error of not more than 5%) leakage current tester and measure the leakage current from any exposed metal to the earth ground. Reverse the power plug polarity and test the above again.
Any current measured MUST NOT EXCEED 0.5 miliamps. Corrective measure must be taken if it exceeds the limit.

## SPECIFICATIONS

### • PMA-777

#### POWER AMPLIFIER SECTION

| | |
|---|---|
| Rated Output Power: | Both channel drives (TUNER — SP OUT) 100 Watts minimum rms per channel (8 ohm Load) with less than 0.02% total harmonic distortion from 20 Hz to 20 kHz.<br>120 W + 120 W (4 ohm Load) 20 Hz to 20 kHz at T.H.D 0.05% (for U.S.A.)<br>1 kHz (4 ohm Load) 150 W + 150 W (DIN, T.H.D 1%)<br>1 kHz (4 ohm Load) 30 W + 30 W (IEC, Subject to change by temperature test.) (for outside U.S.A.) |
| Total Harmonic Distortion: | 0.003% (20 Hz – 20 kHz at –3 dB rated output 8 ohm Load)<br>0.02% (20 Hz – 20 kHz at rated output 8 ohm Load) (U.S.A.) |
| Intermodulation Distortion: | Below 7 kHz/60 Hz: 1/4 0.002% (at amplitude output equivalent to rated output) |
| Output Bandwidth: | 5 Hz – 80 kHz (IHF T.H.D 0.03%) |
| Transmission Characteristics: | 1 Hz – 250 kHz $^{+0}_{-3}$ dB (at 1 W output) |
| Input Sensitivity: | 150 mV |
| Input Impedance: | 47 k ohm |
| Output Impedance: | 0.08 ohm (1 kHz) |
| Output Terminals: | Speaker: A or B Load 4 – 16 ohm<br>A + B Load 8 – 16 ohm<br>Headphone/Stereo headphone (390 mW/8 ohm) |

#### EQUALIZER AMPLIFIER SECTION

| | |
|---|---|
| Equalizer Amplifier Output: | Maximum Output: 12 V (at 47 k ohm Load)<br>Rated Output: 150 mV<br>Total harmonic distortion: less than 0.002% (at 1 kHz, 8 V output) |
| Input Sensitivity/Input Impedance: | PHONO-1, 2 MM 2.5 mV 47 k ohm<br>MC 200 μV 100 ohm<br>TUNER 150 mV 47 k ohm<br>DAD, VIDEO/AUX, TAPE 150 mV 47 k ohm |
| RIAA Deviation: | PHONO-1, 2 MM within ±0.2 dB (20 Hz – 100 kHz)<br>MC within ±0.2 dB (20 Hz – 100 kHz) |





#### OVERALL CHARACTERISTICS

| | |
|---|---|
| SN Ratio (IHFA Network): | PHONO-1, 2<br>MM 88 dB (input terminals short-circuited for 2.5 mV input)<br>MC 72 dB (input terminals short-circuited for 250 μV input)<br>TUNER, TAPE, DAD, VIDEO/AUX: 110 dB (input terminals short-circuited) |
| Tone Control Adjustable Range: | BASS 100 Hz ±8 dB<br>TREBLE 10 kHz ±8 dB |
| Filtering Characteristics: | SUBSONIC 20 Hz, 6 dB/oct |
| Loudness Characteristics: | Low frequency 100 Hz + 7 dB<br>High frequency 10 kHz + 6 dB |
| AC OUTLET: (For U.S.A., Canada and Asia) | SWITCHED x 2, 100 W (Total)<br>UNSWITCHED x 1, 250 W |
| POWER SOURCE: | Germany and France AC 220 V, 50 Hz; U.K. and Australia AC 240 V, 50 Hz; U.S.A. AC 120 V, 60 Hz; Asia 110/120/220/240 V, 50/60Hz (Multiple) |
| POWER CONSUMPTION: | 245 W (U.S.A.); 250 W (IEC); 220 W (Multiple) 800 W Maximum Output |
| DIMENSIONS: | 470 mm (18-1/2")W x 136 mm (5-11/32")H x 413 mm (16-1/4")D (with Wood Board)<br>434 mm (17-5/64")W x 136 mm (5-11/32")H x 413 mm (16-1/4")D (without Wood Board)<br>(including rubber feet, control knobs, and terminals.) |
| WEIGHT: | 12.5 kg (27 lbs 9 oz) (with Wood Board)<br>11.5 kg (25 lbs 6 oz) (without Wood Board) |

Design and specifications are subject to change without prior notice.

### • PMA-757

#### POWER AMPLIFIER SECTION

| | |
|---|---|
| Rated Output Power: | Both channel drives (TUNER — SP OUT) 80 Watts minimum rms per channel (8 ohm Load) with less than 0.02% total harmonic distortion from 20 Hz to 20 kHz.<br>100 W + 100 W (4 ohm Load) 20 Hz to 20 kHz at T.H.D. 0.05% (for U.S.A.)<br>1 kHz (4 ohm Load) 110 W + 110 W (DIN, T.H.D 1%)<br>1 kHz (4 ohm Load) 30 W + 30 W (IEC, Subject to change by temperature test.) (for outside U.S.A. and Canada) |
| Total Harmonic Distortion: | 0.005% (20 Hz – 20 kHz at –3 dB rated output 8 ohms Load) 0.02% (20 Hz – 20 kHz at rated output 8 ohm Load) (U.S.A.) |
| Intermodulation Distortion: | Below 7 kHz/60 Hz : 1/4 0.003% (at amplitude output equivalent to rated output) |
| Output Bandwidth: | 5 Hz – 80 kHz (IHF T.H.D 0.03%) |
| Transmission Characteristics: | 1 Hz – 200 kHz $^{+0}_{-3}$ dB (at 1 W output) |
| Input Sensitivity: | 150 mV |
| Input Impedance: | 47 k ohm |
| Output Impedance: | 0.08 ohm (1 kHz) |
| Output Terminals: | Speaker: A or B Load 4 – 16 ohm<br>A + B Load 8 – 16 ohm<br>Heapdhone/Stereo headphone (310 mW/8 ohm) |

#### EQUALIZER AMPLIFIER SECTION

| | |
|---|---|
| Equalizer Amplifier Output: | Maximum Output: 12 V (at 47 k ohm Load)<br>Rated Output: 150 mV<br>Total harmonic distortion: less than 0.002% (at 1 kHz, 8 V output) |
| Input Sensitivity/Input Impedance: | PHONO MM 2.5 mV 47 k ohm<br>MC 200 μV 100 ohm<br>TUNER 150 mV 47 k ohm<br>DAD, VIDEO/AUX, TAPE 150 mV 47 k ohm |
| RIAA Deviation: | PHONO MC within ±0.3 dB (20 Hz – 100 kHz) |

#### OVERALL CHARACTERISTICS

| | |
|---|---|
| SN Ratio (IHFA Network): | PHONO<br>MM 87 dB (input terminals short-circuited for 2.5 mV input)<br>MC 70 dB (input terminals short-circuited for 250 μV input)<br>TUNER, TAPE, DAD, VIDEO/AUX: 110 dB (input terminals short-circuited) |
| Tone Control Adjustable Range: | BASS 100 Hz ±8 dB<br>TREBLE 10 kHz ±8 dB |
| Filtering Characteristics: | SUBSONIC 20 Hz, 6 dB/oct |
| Loudness Characteristics: | Low frequency 100 Hz + 7 dB<br>High frequency 10 kHz + 6 dB |
| AC OUTLET: (For U.S.A., Canada and Asia) | SWITCHED x 2, 100 W (Total)<br>UNSWITCHED x 1, 250 W |
| POWER SOURCE: | Germany and France AC 220 V, 50 Hz; U.K. and Australia AC 240 V, 50 Hz; U.S.A. and Canada AC 120 V, 60 Hz; Asia 110/120/220/240 V, 50/60 Hz (Multiple) |
| POWER CONSUMPTION: | 215 W (U.S.A.); 500 VA (Canada); 240 W (IEC); 190 W (Multiple); 650 W Maximum Output |
| DIMENSIONS: | 470 mm (18-1/2")W x 136 mm (5-11/32")H x 413 mm (16-1/4")D (with Wood Board)<br>434 mm (17-5/64")W x 136 mm (5-11/32")H x 413 mm (16-1/4")D (without Wood Board)<br>(including rubber feet, control knobs, and terminals.) |
| WEIGHT: | 13 kg (28 lbs 11 oz) (with Wood Board)<br>12 kg (26 lbs 7 oz) (without Wood Board)<br>10.5 kg (23 lbs 2 oz) (without Wood Board) (For U.S.A. & Canada) |

Design and specifications are subject to change without prior notice.

NOTE: The following code correspond to the appropriate models.
E2 for Europe, E1 for Asia, E3 for U.S.A., EK for U.K., EA for Australia and EC for Canada.
This Service Manual is prepared based on E2 Gold Version.

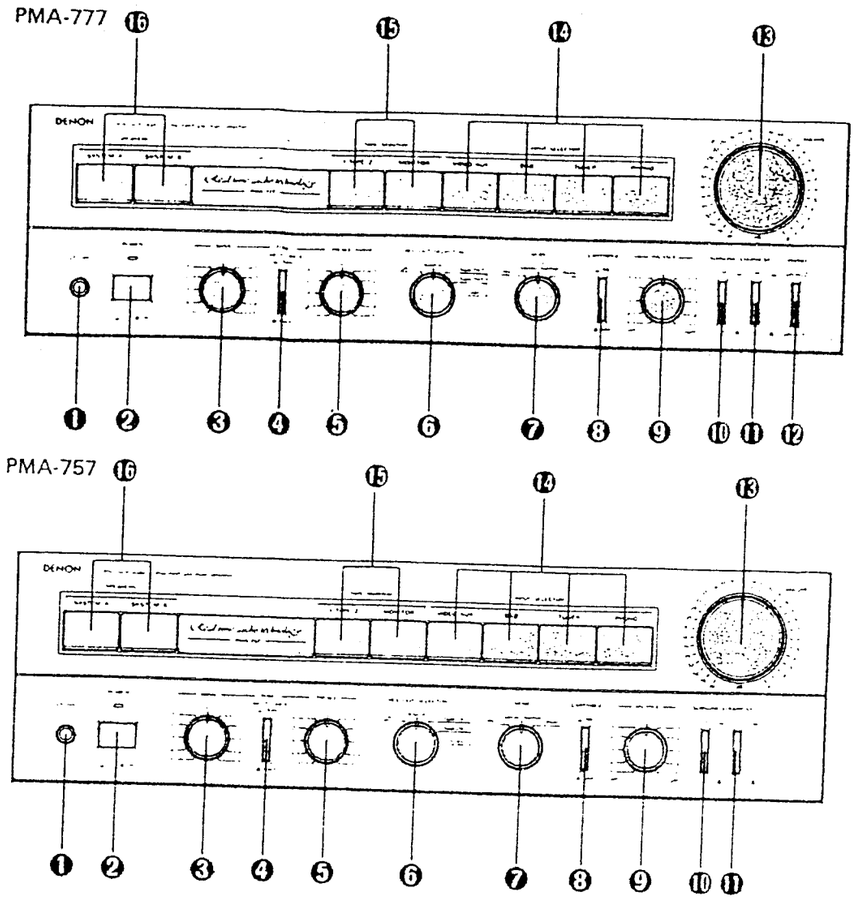


Fig

① phones (Headphone Jack)
② POWER & LED Indicator (Power Switch and LED Indicator)
③ BASS (Bass Control)
④ DIRECT COUPLE (Direct Coupling Switch)
⑤ TREBLE (Treble Control)
⑥ REC OUT SELECTOR (REC OUT Selector Switch)
off, source, tape 1 ▸ 2, tape 2 ▸ 1
copy
⑦ MODE (Mode Switch)
rev. stereo normal, mono
⑧ CARTRIDGE (Cartridge Select Switch)
MC, MM
⑨ BALANCE (Balance Control)
⑩ SUBSONIC (Subsonic Filter Switch)
⑪ LOUDNESS (Loudness Switch)
⑫ PHONO (Turntable Select Switch)
. . . only for PMA-777
Phono 1, Phono 2
⑬ VOLUME (Volume Control)
⑭ INPUT SELECTOR (Input Selector Switch)
PHONO, TUNER, DAD, VIDEO/AUX
⑮ TAPE MONITOR (Tape Monitor Switch)
⑯ SPEAKERS (Speaker Select Switch)
SYSTEM A, SYSTEM B





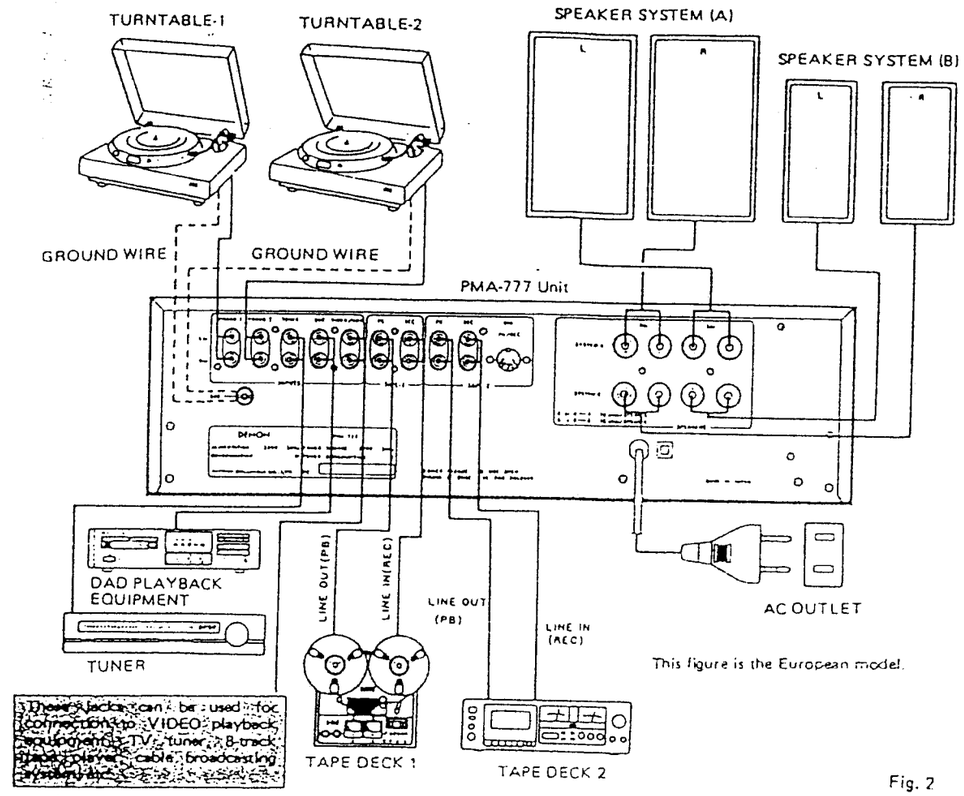


Fig. 2

1) CONNECTIONS
- Do not plug power cord into AC outlet until all connections are completed.
- Connect right (R) channel plug to right (R) channel jack, and left channel plug to left channel jack.
- Insert plugs firmly into corresponding jacks. If connection is incomplete, noise may be generated.
- Plug audio component power cords into AC OUTLET terminal. Do not use this terminal for other electrical appliances, such as hair dryers. (NOT INCLUDED IN SYSTEMS FOR USE IN EUROPE AND AUSTRALIA)
- Do not bundle pin plug cords with power cord. Do not place pin plug cords near power transformer, or hum and other noise may occur.
- Always connect a pin plug cord or shorting pins to "PHONO" input terminals because these terminals are highly sensitive. If these terminal are not connected, induction hum may occur.

2) AC OUTLETS (NOT INCLUDED IN SYSTEMS FOR USE IN EUROPE AND AUSTRALIA)
AC outlets are used for connecting amplifier component units, such as tuner, turntable, tape deck, etc.
- SWITCHED (Capacity: 100 W):
  This outlet is turned on/off when main power switch is turned on/off.
- UNSWITCHED (Total capacity: 250 W):
  These outlets are always ON whether power switch is on or off.

) LINE VOLTAGE (Voltage select switch) . . . NOT INCLUDED IN SYSTEMS FOR USE IN EUROPE, U.S.A., CANADA AND AUSTRALIA
- The desired voltage may be set with the VOLTAGE SELECTOR KNOB on the back panel using a screw driver.
- Do not twist the VOLTAGE SELECTOR KNOB with excessive force. It may be damaged.
- If the voltage select switch does not turn smoothly, see a qualified serviceman.

PRE-SET
LINE VOLTAGE

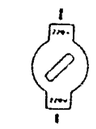

Fig. 3

## METHOD OF ADJUSTMENTS

Carry out adjustment at room temperature and normal humidity with the power source operating at the rated voltage.

### ADJUSTMENT OF IDLING CURRENT (ETC0738, ETC0738B) – Fig. 4

Preparation

1 Place the unit in normal operating condition, avoid such good ventilating location close to air conditioner, circulating fan, etc.
The unit circumference temperature must be in 15° ~ 30°C.

2 Set the switches as follows:
- POWER SWITCH → OFF
- VOLUME CONTROL → –∞ (↶)
- DIRECT COUPLE → DIRECT
- SPEAKER TERMINAL → No load (Do not connect speakers, dummy resistors.)

Adjustment

1 Remove top cover and rotate VR301 (Lch) counterclockwise (↶) and VR302 (Rch) clockwise (↷) on the ETC-738. Connect a DC voltmeter to the test point (Lch TP-1, 2 and Rch TP-3, 4).

2 Connect the power cord and turn the POWER switch on. Immediately after turning on the power, rotate VR301 clockwise (↷), VR302 counterclockwise (↶) and adjust the test point voltage value –
PMA-777: 2 mV ± 0.2 mV DC
PMA-757: 5 mV ± 0.2 mV DC

3 3 minutes after the preparatory adjustment as in step 2, rotate VR301, VR302 and obtain the voltage value –
PMA-777: 11 mV ± 2 mV DC
PMA-757: 13 mV ± 0.5 mV DC

> CAUTION
> VR301 and VR302 of the present model have opposite turning directions in adjustment. In the future by changing of the board, adjustment of VR302 will be the same manner as of VR301.
> Therefore after the board has changed (222 1090 208), adjust the VR302 with the possible care.

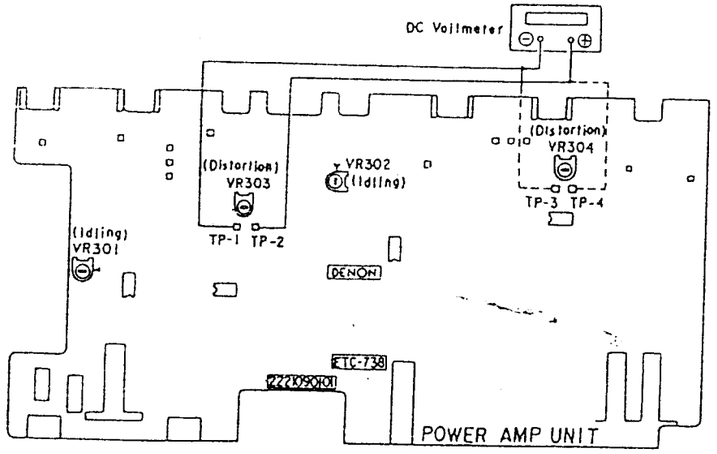


Fig. 4

### ADJUSTMENT OF DISTORTION FACTOR (Fig. 4)

1 Connect a 8-ohm loading resistor across the speaker terminal.

2 Inject 20 kHz sine wave signal through the TUNER terminal. Operate both L and R channels and obtain 50 watts (20 Vrms) output power across the 8-ohm loading resistor.

3 Adjust VR303 (Lch) and VR304 (Rch) for minimum distortion factor (be sure to put bottom cover to the unit during the adjustment).

www.manualscenter.com





### ADJUSTMENT OF NEUTRAL POTENTIAL POINT (Fig. 5, Fig. 5')

Preparation

1 Insert the shorting pin into the PHONO input terminal.

2 Connect a digital voltmeter (be able to measure 0.01 mV through 1 mV DC) to the REC output (Lch and Rch).

3 Connect a 100-k ohm (1/4 watt or so) resistor across the test point (Lch TP-3, 4 and Rch TP-5, 6) on the EQ Amp unit.

4 Set the switches as follows:
- INPUT SELECTOR → PHONO
- REC OUT SELECTOR → Source
- CARTRIDGE → MM
- VOLUME CONTROL → –∞ (↶)

Adjustment

1 Approximately 2 minutes after turning on the POWER switch, rotate – VR103 (PMA-777), VR101 (PMA-757) and adjust the Lch digital meter reading for 0.5 mV DC or less value.

2 In the same manner rotate – VR104 (PMA-777), VR102 (PMA-757) and adjust the Rch digital meter reading for 0.5 mV DC or less value.

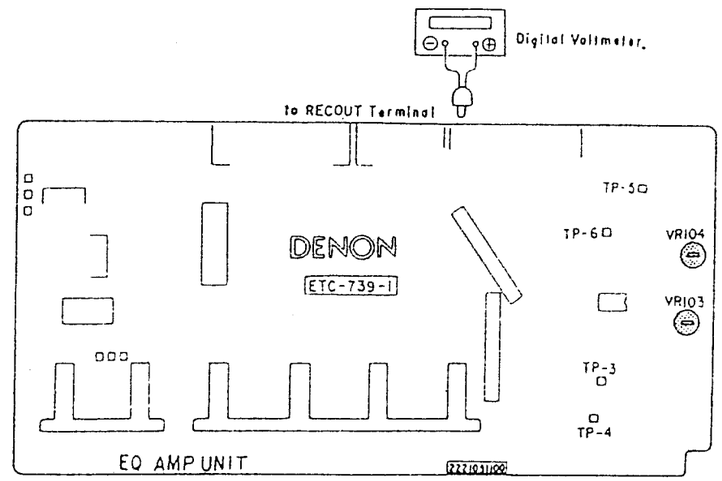


Fig. 5
for : PMA-777

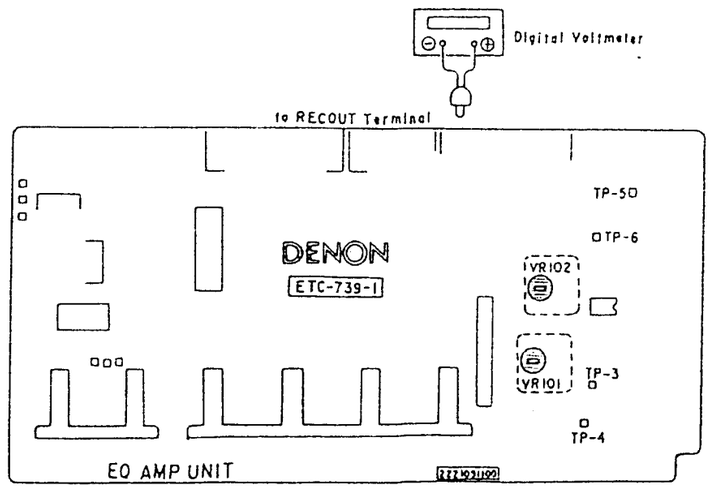


Fig. 5'
for : PMA-757

• PMA-777

ETC0740 P.S & PROTECT UNIT

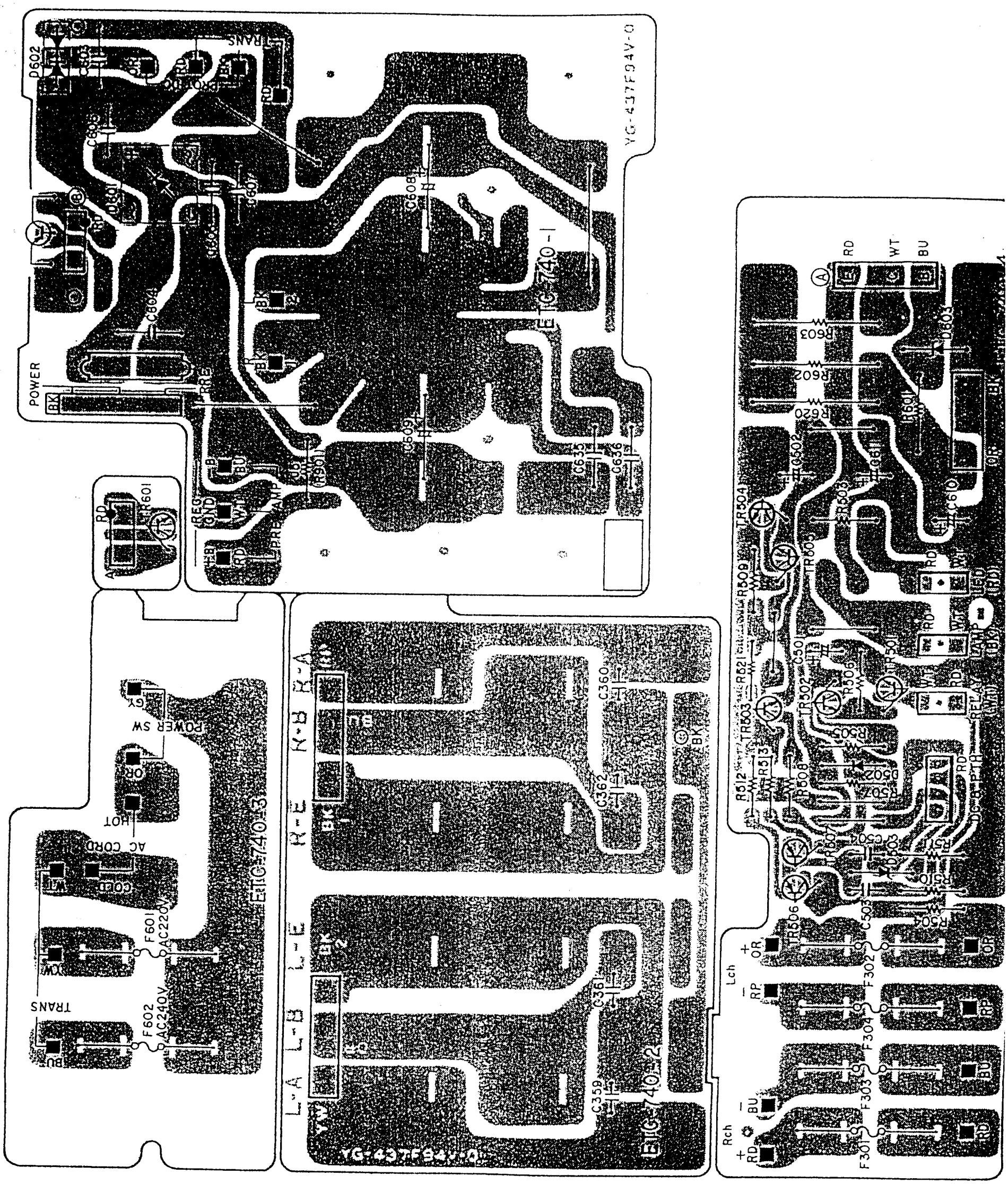

## ETC0739 INPUT & EQ. UNIT PARTS LIST

| Ref. No. | Part No. | Part Name & Descriptions |
|---|---|---|
| | | **SEMICONDUCTORS** |
| IC101 | 2630118027 | NJM4560DX (JRC) IC |
| IC103, 104 | 2630133002 | μPC741 (NEC) IC |
| TR101 ~108 | 2750046008 | 2SK170(BL)/(V)DVGS FET |
| TR602, 603 | 2750043001 | 2SK381(B)/(C) FET |
| TR604 | 2730236029 | 2SC2824(Y/O) TRANSISTOR |
| TR605 | 2710178039 | 2SA564A(R) TRANSISTOR |
| TR606 | 2710135027 | 2SA1184(Y/O) TRANSISTOR |
| D105, 106 | 2760049008 | 1S2076 DIODE |
| D107 | 2760224001 | HZ-30 ZENER |
| D501 | 2760191008 | W03C DIODE |
| D604 | 2760301005 | HZ22-2 ZENER |
| | | **RESISTORS (not included Carbon ±5%, 1/4W Type)** |
| R502 | 2440018018 | 510 ohm ±5% 1W METAL OXIDE (NB) |
| R503, 504 | 2412037025 | 470 ohm ±5% 1/4W CARBON (NB) |
| R505, 506 | 2440027029 | 22 ohm ±5% 1W METAL OXIDE (NB) |
| R507, 508 | 2440030029 | 820 ohm ±5% 1W METAL OXIDE (NB) |
| R509, 510 | 2440028029 | 330 ohm ±5% 2W METAL OXIDE (NB) |
| VR103, 104 | EP-5462H19 | SOLID VR 100k ohm |
| | | **CAPACITORS (not included Ceramic ±5%, 50V Type)** |
| C101 ~103 | 2544145005 | 0.47μF ±20% 50V ELECTROLYTIC |
| C127, 128 | 2554161008 | 0.0047μF ±5% 50V PLASTIC FILM |
| C129 | 2544157006 | 470μF ±20% 25V ELECTROLYTIC |
| C131, 132 | 2549011008 | 1μF LOW LEAK 50V ELECTROLYTIC |
| C133, 134 | 2544146004 | 1μF ±20% 50V ELECTROLYTIC |
| C135, 136 | 2554173009 | 0.015μF ±5% 50V PLASTIC FILM |
| C137, 138 | 2554131009 | 270pF ±5% 50V PLASTIC FILM |
| C139, 140 | 2554187008 | 0.056μF ±5% 50V PLASTIC FILM |
| C141, 142 | 2554169000 | 0.01μF ±5% 50V PLASTIC FILM |
| C143, 144 | 2544130007 | 100μF ±20% 10V ELECTROLYTIC |
| C145, 146 | 2544146004 | 1μF ±20% 50V ELECTROLYTIC |
| C149 ~152 | 2554163006 | 0.0056μF ±5% 50V PLASTIC FILM |
| C153, 154 | 2531024003 | 0.01μF +80,–20% 50V CERAMIC |
| C355, 356 | 2554169000 | 0.01μF ±5% 50V PLASTIC FILM |
| C357, 358 | 2554177005 | 0.022μF ±5% 50V PLASTIC FILM |
| C612 | 2544153000 | 47μF ±20% 50V ELECTROLYTIC |
| C615, 616 | 2544146004 | 1μF ±20% 50V ELECTROLYTIC |
| C179 ~181 | 2531024003 | 0.01μF +80,–20% 50V CERAMIC |

| Ref. No. | Part No. | Part Name & Descriptions |
|---|---|---|
| C617 ~624 | 2531024003 | 0.01μF +80,–20% 50V CERAMIC |
| | | **SWITCHES** |
| SW101 | 2124513002 | SLIDE SW (4-2) REMOTE PH. SELECTOR |
| SW102 | 2124330007 | SLIDE SW (4-2) REMOTE CARTRIDGE |
| SW103 | 2124512003 | 4P PUSH SWITCH INPUT SEL. |
| SW104 | 2124422009 | 2P PUSH SWITCH T. MONITOR |
| SW105 | 2124187001 | SLIDE SW (4-4) REMOTE REC OUT |
| SW106 | 2124510005 | 2P PUSH SWITCH S.P. |
| | | **OTHER PARTS** |
| | 2221091100 | P.W. BOARD |
| | EP-5667H1 | TERMINAL PIN USED 30 |
| | 2090008146 | JUMPER WIRE P=5mm USED 6 |
| | 2090008120 | JUMPER WIRE P=10mm USED 100 |
| | 2090008117 | JUMPER WIRE P=12.5mm USED 8 |
| | 4140116106 | SHIELD COVER USED 2 |
| LE501 | 3939154008 | PR5552K-1 RED LED |
| L301, 302 | 2350007007 | INDUCTOR |
| PL601 ~609 | 3930083000 | PILOT LAMP 16V 0.04A USED 9 |
| | 4530022208 | LAMP COVER (A) USED 7 |
| | 4530023207 | LAMP COVER (B) USED 1 |
| | 1220109007 | BLIND SHEET |
| | 4410412200 | LED HOLDER |
| | 2034197097 | 3P CONNECTOR CORD |
| | 2034214019 | 3P CONNECTOR CORD |
| | 2034185096 | 3P CONNECTOR CORD |
| | 2034181074 | 3P CONNECTOR CORD |
| | 2034181087 | 3P CONNECTOR CORD |
| | 2038132016 | 5P CONNECTOR CORD |
| RL501 | 2140037009 | RELAY |
| | 2048100009 | HEADPHONE JACK |
| | 2050145007 | 4P CONNECTOR BASE PHONO |
| | 2036084001 | 4P CONNECTOR BASE USED 2 |
| | 2040079002 | 6P CONNECTOR BASE |
| | 2048059008 | DIN JACK (5P) |
| | 4140240001 | EARTH PLATE |
| | 4170043000 | RADIATOR USED 2 |
| | 4730354019 | TAPPING SCREW (2) 3x8 USED 2 |
| | 2050190036 | 3P NH CONNECTOR BASE USED 2 |
| | 2050190052 | 5P NH CONNECTOR BASE |
| | 2050185038 | 3P WIRE HOLDER USED 7 |
| | 2050185054 | 5P WIRE HOLDER |



## PRINTED WIRING BOARD PATTERNS AND PARTS LIST

### ETC0740 P.S & PROTECT UNIT PARTS LIST

| Ref. No. | Part No. | Part Name & Descriptions |
|---|---|---|
| | | **SEMICONDUCTORS** |
| TR601 | 2740088018 | 2SD1406(Y/GR) TRANSISTOR |
| TR501 | 2730235020 | 2SC1841(E/F) TRANSISTOR |
| TR502 | 2730269038 | 2SC1685(R) TRANSISTOR |
| TR505, 506, 507 | 2730269038 | 2SA564A(R) TRANSISTOR |
| D502 | 2760049008 | 1S2076 DIODE |
| D503 | 2760236031 | HZ5C-1 ZENER |
| D601 | 2760356005 | D5FB20(4001) DIODE |
| D602 | 2760151006 | 1D2C-1 DIODE |
| D603 | 2760256008 | HZ-16-2 ZENER |
| | | **RESISTORS** |
| R503 | 2412096008 | 1.5k ohm ±5% 1/4W CARBON |
| | 2440037026 | 470 ohm ±5% 1W METAL OXIDE (NB) |
| R505 | 2412116001 | 10k ohm ±5% 1/4W CARBON |
| R506 | 2412108006 | 4.7k ohm ±5% 1/4W CARBON |
| R507 | 2412164008 | 1M ohm ±5% 1/4W CARBON |
| R508 | 2412036000 | 4.7 ohm ±5% 1/4W CARBON |
| R509 | 2412116001 | 10k ohm ±5% 1/4W CARBON |
| R510, 511 | 2412149007 | 220k ohm±5% 1/4W CARBON |
| R512, 513 | 2412120000 | 15k ohm ±5% 1/4W CARBON |
| R521 | 2412140006 | 100k ohm±5% 1/4W CARBON |
| | 2440085022 | 100 ohm ±5% 2W METAL OXIDE (NB) |
| | 2440079026 | 27 ohm ±5% 2W METAL OXIDE (NB) |
| | | **CAPACITORS** |
| C359 ~362 | 2531024003 | 0.01μF +80,–20% 50V CERAMIC |
| C501 | 2544129005 | 47μF ±20% 10V ELECTROLYTIC |
| C502 | 2544161034 | 330μF ±20% 6.3V ELECTROLYTIC |
| C503, 504 | 2531024003 | 0.01μF +80,–20% 50V CERAMIC |
| C504 ~607 | 2531053003 | 0.01μF +100,–0% 500V CERAMIC |
| C608, 609 | 2546058006 | 22000/22000μF 63V ELECTROLYTIC |
| C610 | 2544063035 | 100μF ±20% 80V ELECTROLYTIC |
| C611 | 2544146004 | 1μF 50V ELECTROLYTIC |
| | 2568024018 | 0.1μF ±20% 250VAC METALIZED |
| | | **FUSE** |
| | 2061046023 | FUSE (6.3A) MINISEMKO |
| | 2061015087 | FUSE (T4A) MINISEMKO |
| | | **OTHER PARTS** |
| | 2221092109 | P.W. BOARD |
| | EP-5667H1 | TERMINAL PIN USED 25 |
| | 2090008120 | JUMPER WIRE P=10mm USED 5 |
| | 2050185054 | 5P WIRE HOLDER |
| | 2050185038 | 3P WIRE HOLDER USED 2 |
| | 2050190036 | 3PNH CONNECTOR BASE USED 3 |
| | 2050190049 | 4PNH CONNECTOR BASE |
| | 2050122033 | 3P CONNECTOR PIN ASS'Y USED 2 |
| | 2050087039 | 3P TERMINAL USED 3 |
| | 2090052008 | JUMPER D=1.6 ℓ=20mm USED 3 |

| Ref. No. | Part No. | Part Name & Descriptions |
|---|---|---|
| (R901)J5 | 2090008120 | JUMPER WIRE P=10mm |
| | 2034163063 | 3P CONNECTOR CORD |
| | 2034193046 | 3P CONNECTOR CORD |
| | 2020072008 | FUSE HOLDER USED 2 |
| | 4120952102 | CONDENSER BRACKET |
| | 2050144008 | 8P TERMINAL |
| | 2050178003 | EARTH PLATE |
| | 4730354019 | TAPPING SCREW (2) 3x8 USED 4 |
| | 5130913004 | FUSE LABEL |

### ETC0740D E1 for Asia
(Same as ETC0740 except the followings.)

| Ref. No. | Part No. | Part Name & Descriptions |
|---|---|---|
| | | **CAPACITORS** |
| C359 ~362 | 2531024003 | 0.01μF +80,–20% 50V CERAMIC (DELETE) |
| C635, 636 | 2568024018 | 0.1μF ±20% 250V METALIZED (DELETE) |
| | | **OTHER PARTS** |
| | 2020022008 | FUSE HOLDER (DELETE) |
| | 2061015087 | FUSE (4A) (DELETE) |

### ETC0740E E3 for U.S.A.
(Same as ETC0740 except the followings.)

| Ref. No. | Part No. | Part Name & Descriptions |
|---|---|---|
| | | **CAPACITORS** |
| C359 ~361 | 2531024003 | 0.01μF +80,–20% 50V CERAMIC (DELETE) |
| C635, 636 | 2568024018 | 0.1μF ±20% 250V METALIZED (DELETE) |
| | | **OTHER PARTS** |
| F301 ~304 | 2061046001 | FUSE (6.3A) USED 4 (CHANGE) |
| F501 | 2061046014 | FUSE (6A) (CHANGE) |
| | 5130854037 | FUSE LABEL (ADD) |
| | 5130854024 | FUSE LABEL (ADD) |
| (R901)J5 | 2412321032 | 4.7 ohm ±5% 1/4W CARBON (NB) |

### ETC0740E EA for Australia and EK for U.K.
(Same as ETC0740 except the followings.)

| Ref. No. | Part No. | Part Name & Descriptions |
|---|---|---|
| | | **CAPACITORS** |
| C359 ~361 | 2531024003 | 0.01μF +80,–20% 50V CERAMIC (DELETE) |
| C635, 636 | 2568024018 | 0.1μF ±20% 250V METALIZED (DELETE) |
| | | **OTHER PARTS** |
| F601 | 2061015087 | FUSE (T4A) MINISEMKO (DELETE) |
| F602 | 2061015087 | FUSE (T4A) MINISEMKO (ADD) |

www.manualscenter.com

:1 for Asia
0739 except the followings.)

| No. | Part Name & Descriptions |
|---|---|
| | RESISTORS |
| 6003 | 470k ohm±5% 1/4W CARBON (DELETE) |
| 8120 | JUMPER WIRE P=10mm (CHANGE) |
| | CAPACITORS |
| 2001 | 430pF ±5% 50V CERAMIC (DELETE) |
| 3000 | 470pF ±5% 50V CERAMIC (DELETE) |
| 5008 | 560pF ±5% 50V CERAMIC (DELETE) |
| 4003 | 0.01μF +80,−20% 50V CERAMIC (DELETE) |
| 5004 | 240pF ±5% 50V CERAMIC (DELETE) |
| 5005 | 47pF ±5% 50V CERAMIC (CHANGE) |
| | OTHER PARTS |
| 008 | DIN JACK (5P) (DELETE) |
| 120 | JUMPER WIRE P=10mm USED 102 (CHANGE) |

• PMA-777
ETC0739 INPUT & EQ. UNIT

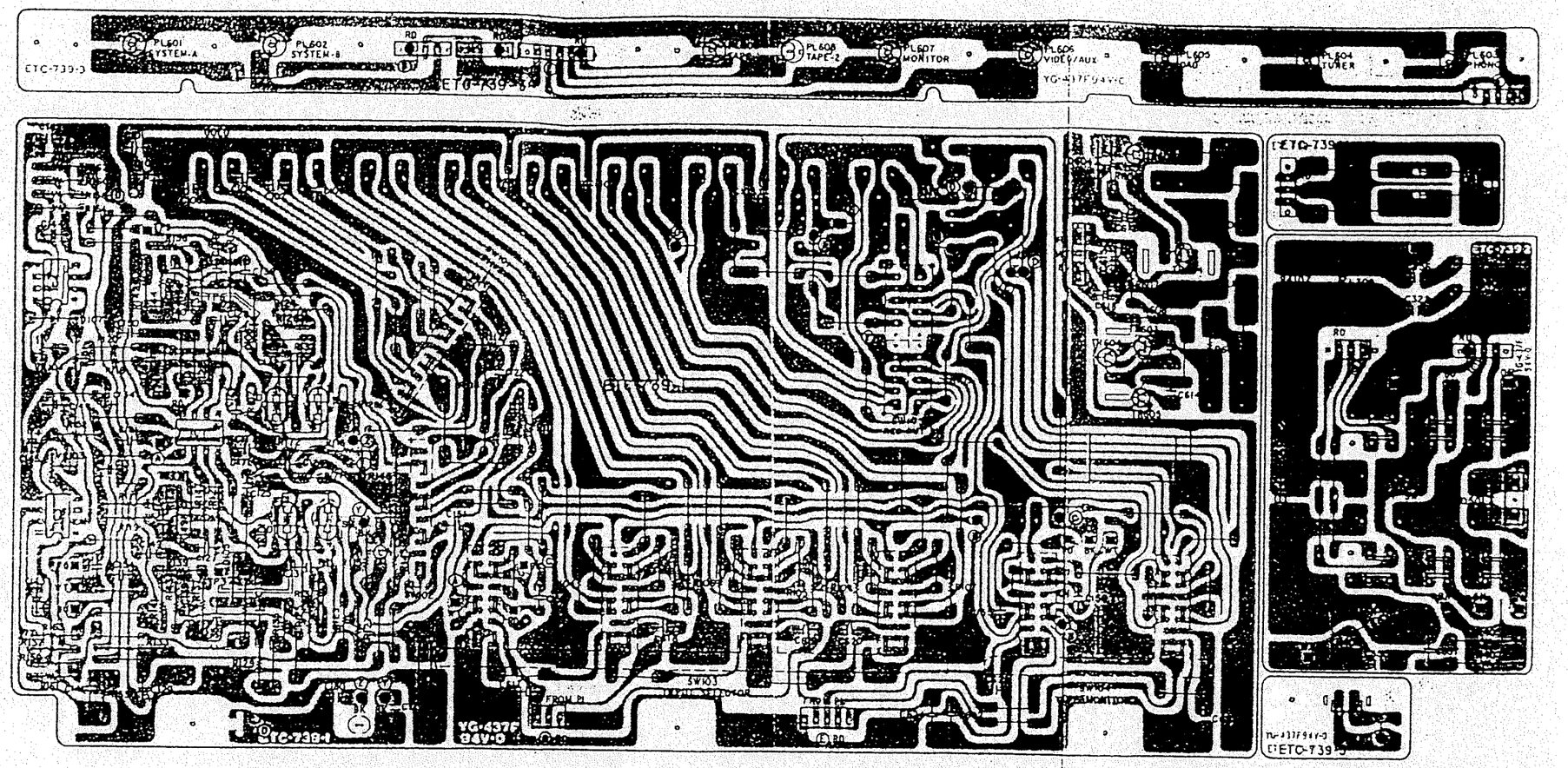


www.manualscenter.com

for U.S.A.
739 except the followings.)

| o. | Part Name & Descriptions |
|---|---|
| | RESISTORS |
| 003 | 470k ohm±5% 1/4W CARBON (DELETE) |
| 120 | JUMPER WIRE P=10mm (CHANGE) |
| | CAPACITORS |
| 01 | 430pF ±5% 1/4W CERAMIC (DELETE) |
| 003 | 0.01μF +80,−20% 50V CERAMIC (CHANGE) |

| Ref. No. | Part No. | Part Name & Descriptions |
|---|---|---|
| C155, 156 | 2533643000 | 470pF ±5% 50V CERAMIC (DELETE) |
| C171, 172 | 2533636004 | 240pF ±5% 50V CERAMIC (DELETE) |
| C125, 126 | 2533645008 | 560pF ±5% 50V CERAMIC (CHANGE) |
| C173, 174 | 2533619005 | 47pF ±5% 50V CERAMIC (CHANGE) |
| | | OTHER PARTS |
| | 2048059008 | DIN JACK (5P) (DELETE) |
| | 2090008120 | JUMPER WIRE P=10mm USED 102 (CHANGE) |

ETC0739F EA for Australia and EK for U.K.
(Same as ETC0739 excep the followings.)

| Ref. No. | Part No. | Part Nmae & Descriptions |
|---|---|---|
| | | RESISTORS |
| R171, 172 | 2090008120 | JUMPER WIRE P=10mm (CHANGE) |
| | | CAPACITORS |
| C104 ~107 | 2533642001 | 430pF ±5% 50V CERAMIC (DELETE) |
| C178, 179, 180 | 2531024003 | 0.01μF +80,−20% 50V CERAMIC (CHANGE) |

| Ref. No. | Part No. | Part Name & Descriptions |
|---|---|---|
| C155, 156 | 2533643000 | 470pF ±5% 50V CERAMIC (DELETE) |
| 171, 172 | 2533636004 | 240pF ±5% 50V CERAMIC (DELETE) |
| C125, 126 | 2533645008 | 560pF ±5% 50V CERAMIC (CHANGE) |
| C173, 174 | 2533619005 | 47pF ±5% 50V CERAMIC (CHANGE) |
| | | OTHER PART |
| | 2090008120 | JUMPER WIRE P=10mm USED 102 (CHANGE) |

• PMA-777

ETC0738 TONE & POWER UNIT

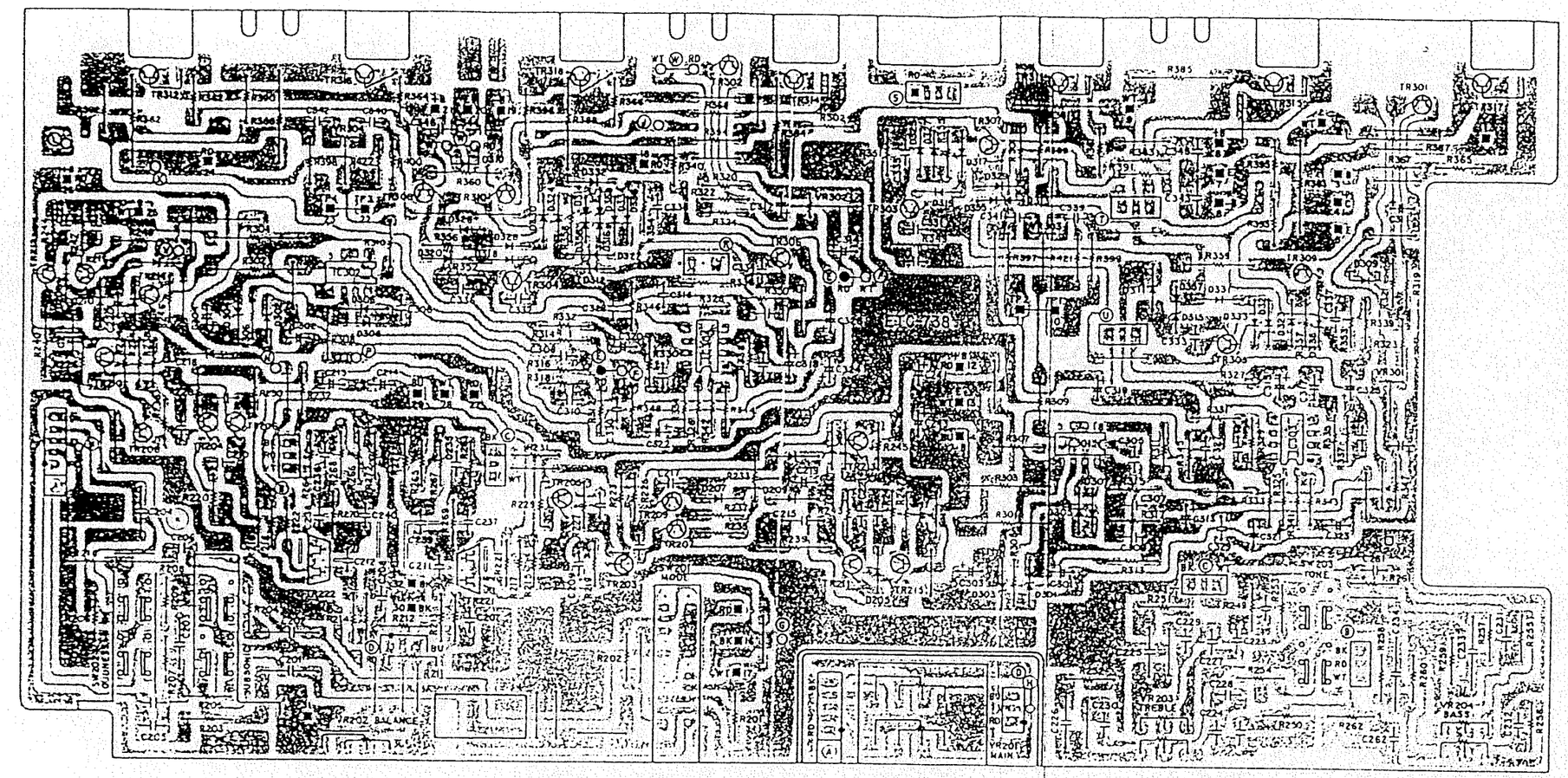


www.manualscenter.com

ETC0738E E3 for U.S.A.
(Same as ETC0738 except the followings.)

| Ref. No. | Part No. | Part Name & Descriptions |
|---|---|---|
| | | CAPACITORS |
| C241, 243 | 2544203002 | 1μF ±20% 160V ELECTROLYTIC (CHANGE) |

ETC0738 TONE & POWER UNIT PARTS LIST

| Ref. No. | Part No. | Part Name & Descriptions |
|---|---|---|
| | | SEMICONDUCTORS |
| TR221, 222 | 2750046008 | 2SK170(BL)/(V)DVGS FET |
| IC301 ~304 | 2630257001 | M-5218P (MITSUBISHI) IC |
| TR201, 202 | 2750046008 | 2SK170(BL)/(V)DVGS FET |
| TR203 ~206 | 2730235020 | 2SC1841(E/F) TRANSISTOR |
| TR207 ~210 | 2710185006 | 2SA949(O)/(Y) TRANSISTOR |
| TR211 ~214 | 2730307000 | 2SC2229(O)/(Y) TRANSISTOR |
| TR215, 216 | 2710185006 | 2SA949(O)/(Y) TRANSISTOR |
| TR301, 302 | 2730198015 | 2SC1815(BL) TRANSISTOR |
| TR303, 304 | 2730307000 | 2SC2229(O)/(Y) TRANSISTOR |
| TR305, 306 | 2710185006 | 2SA949(O)/(Y) TRANSISTOR |
| TR307, 308 | 2730199027 | 2SC2238(Y)/(O) TRANSISTOR |
| TR309, 310 | 2710104029 | 2SA968(Y)/(O) TRANSISTOR |
| D205 ~210 | 2760049008 | 1S2076 DIODE |
| D301 ~304 | 2760253001 | HZ15-2 ZENER |
| D305 ~308 | 2760049008 | 1S2076 DIODE |
| D309, 310 | 2760388002 | MV-1YH DIODE |
| D311, 312 | 2760236031 | HZ5C-1 ZENER |
| D313 ~316 | 2760052053 | HZ11B-1 ZENER |
| D317 ~336 | 2760049008 | 1S2076 DIODE |
| D355 ~358 | 2760049008 | 1S2076 DIODE |
| | | RESISTORS (not included Carbon Film ±5%, 1/4W Type) |
| R209, 210 | 2420203003 | 10M ohm ±10% 1/4W CARBON COMPOSIT |
| R211, 212 | 2412314023 | 470 ohm ±5% 1/4W CARBON (NB) |
| R223, 226 | 2412314023 | 470 ohm ±5% 1/4W CARBON (NB) |
| R231, 232 | 2412314047 | 750 ohm ±2% 1/4W CARBON (FR) |
| R233, 234 | 2412314003 | 100 ohm ±2% 1/4W CARBON (FR) |
| R239, 240 | 2440054025 | 12k ohm ±5% 1W METALOXIDE (NB) |
| R241, 242 | 2412314037 | 220 ohm ±2% 1/4W CARBON (FR) |
| R245, 246 | 2412321016 | 22 ohm ±5% 1/4W CARBON (NB) |
| R301, 302 | 2440103028 | 2.7k ohm ±5% 2W METALOXIDE (NB) |
| R305, 306 | 2412321045 | 220 ohm ±5% 1/4W CARBON (NB) |
| R309, 310 | 2412321003 | 1 ohm ±5% 1/4W CARBON (NB) |

CONNECTION DIAGRAM

- PMA-777

This figure is E2 version

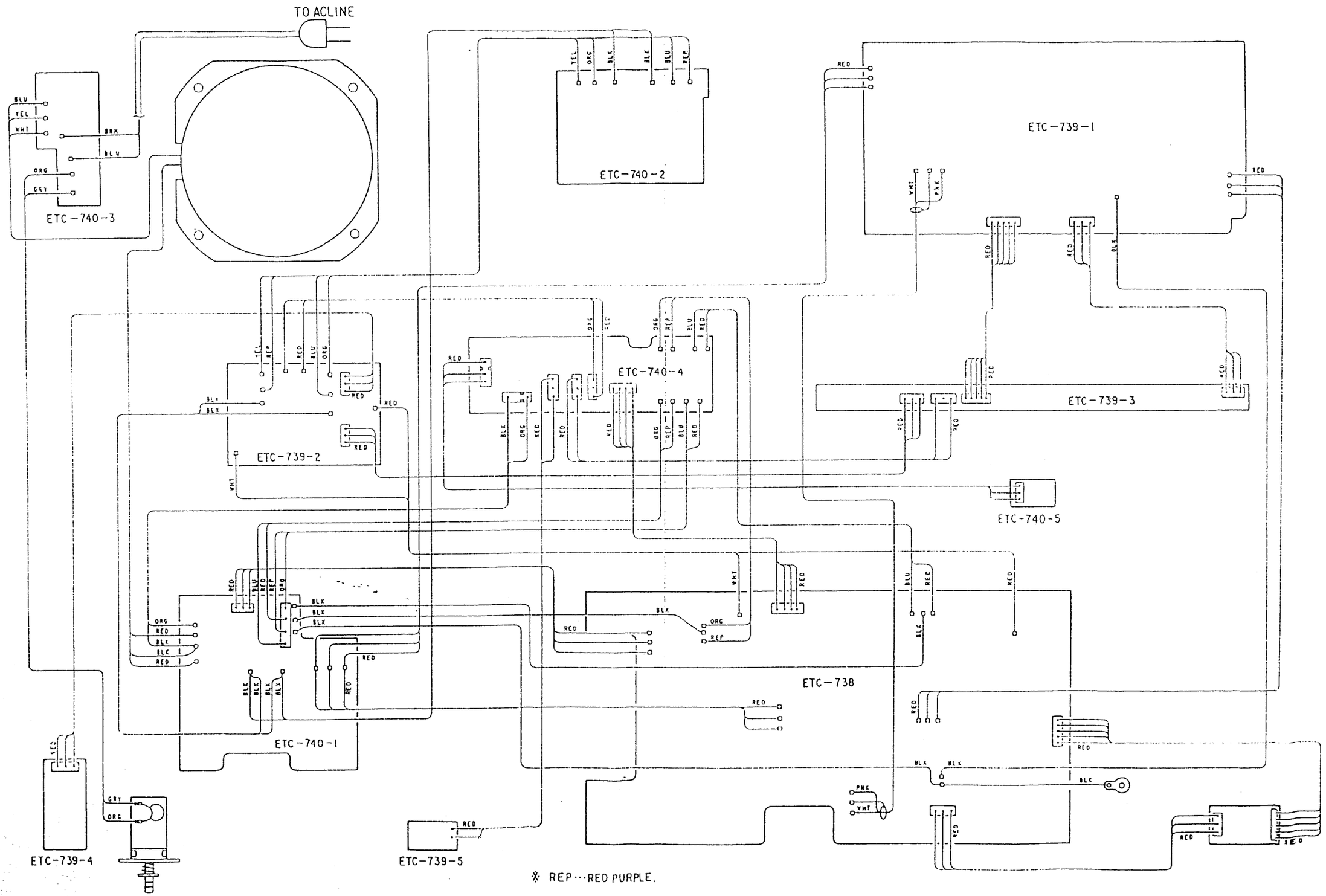


※ REP…RED PURPLE.

www.manualscenter.com

• PMA-757

ETC0740B P.S & PROTECT UNIT

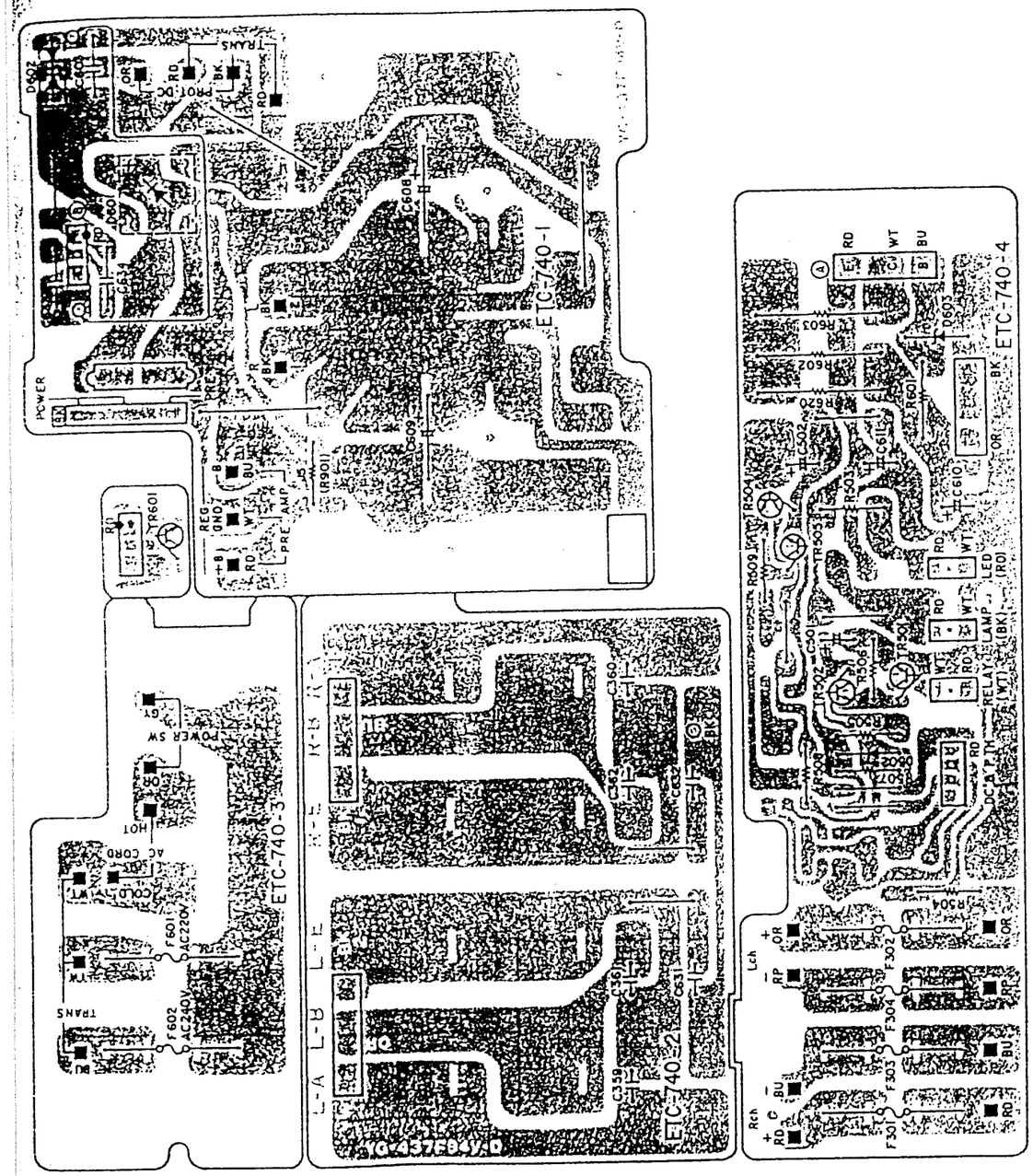


## ETC0740B P.S & PROTECT UNIT PARTS LIST

| Ref. No. | Part No. | Part Name & Descriptions | |
|---|---|---|---|
| | | **SEMICONDUCTORS** | |
| TR501 | 2730235020 | 2SC1841(F)/(E) | TRANSISTOR |
| TR502 | 2730269038 | 2SC1685(R) | TRANSISTOR |
| TR504, 505 | 2730269038 | 2SC1685(R) | TRANSISTOR |
| TR601 | 2740088018 | 2SD1406(Y)/(GR) | TRANSISTOR |
| D502 | 2760049008 | 1S2076 | DIODE |
| D601 | 2760356005 | D5FB20(4001) | DIODE |
| D602 | 2760151006 | 1D8C-1 | DIODE |
| D603 | 2760256008 | HZ-16-2 | ZENER |
| | | **RESISTORS** | |
| R503 | 2412096008 | 1.5k ohm ±5% 1/4W | CARBON |
| ★R504 | 2412369081 | 330 ohm ±5% 1/4W | CARBON (NB) |
| R505 | 2412116001 | 10k ohm ±5% 1/4W | CARBON |
| R506 | 2412108006 | 4.7k ohm ±5% 1/4W | CARBON |
| R507 | 2412164008 | 1M ohm ±5% 1/4W | CARBON |
| R508 | 2412036000 | 4.7 ohm ±5% 1/4W | CARBON |
| R509 | 2412116001 | 10k ohm ±5% 1/4W | CARBON |
| R601 | 2410205008 | 6.8k ohm ±5% 1/2W | COMPOSIT |
| ★R602 | 2440086022 | 100 ohm ±5% 2W | METAL OXIDE (NB) |
| ★R603 | 2440079026 | 27 ohm ±5% 2W | METAL OXIDE (NB) |
| ★R620 | 2440086022 | 100 ohm ±5% 2W | METAL OXIDE (NB) |
| | | **CAPACITORS** | |
| C359 ~362 | 2531025002 | 0.022μF +80,−20% 50V | CERAMIC |
| C501 | 2544009002 | 47μF ±20% 10V | ELECTROLYTIC |
| C502 | 2544161034 | 330μF ±20% 6.3V | ELECTROLYTIC |
| C603 | 2531053003 | 0.01μF +100,−0% 500V | CERAMIC |
| C608, 609 | 2546063004 | 15000μF/15000μF 63V | ELECTROLYTIC |
| C610 | 2544063035 | 100μF ±20% 80V | ELECTROLYTIC |
| C611 | 2544089006 | 1μF ±20% 50V | ELECTROLYTIC |
| C633, 634 | 2531053003 | 0.01μF +100,−10% 500V | CERAMIC |
| C631, 632 | 2531024003 | 0.01μF +80,−20% 50V | CERAMIC |
| | | **FUSE** | |
| ★F301 ~304 | 2061040036 | FUSE (F6A) | SEMKO MINI |
| ★F601 | 2061015074 | FUSE (T3.15A) | SEMKO MINI |
| | | **OTHER PARTS** | |
| | 2221092109 | P.W. BOARD | |
| | EP-5667H1 | TERMINAL PIN USED 26 | |
| | 2050008120 | JUMPER WIRE P=10mm USED 5 | |
| | 2050185054 | 5P WIRE HOLDER | |
| | 2050185038 | 3P WIRE HOLDER | |
| | 2050190036 | 3PNH CONNECTOR BASE USED 3 | |
| | 2050122033 | 3P CONNECTOR PIN ASS'Y USED 2 | |
| | 2050087039 | 3P TERMINAL USED 3 | |
| | 2090052008 | JUMPER D1.6 ℓ=20mm USED 3 | |
| | 2034163063 | 3P CONNECTOR CORD | |
| | 2034193046 | 3P CONNECTOR CORD | |
| | 4120952102 | CONDENSER BRACKET | |
| | 2050144008 | 8P TERMINAL | |
| | 2050178003 | EARTH PLATE | |
| | 4730354019 | TAPPING SCREW (2) 3×8 USED 4 | |
| | 5130934009 | FUSE LABEL | |

| Ref. No. | Part No. | Part Name & Descriptions |
|---|---|---|
| ★ | 2020022008 | FUSE HOLDER USED 10 |
| | 2030226027 | 1P CONTACT ASS'Y |
| (R901)J5 | 2050008120 | JUMPER WIRE P=10mm |

ETC0740M E1 for Asia
(Same as ETC0740B except the followings.)

| Ref. No. | Part No. | Part Name & Descriptions | |
|---|---|---|---|
| | | **CAPACITORS** | |
| C631, 632 | 2531024003 | 0.01μF +80,−20% 50V CERAMIC | (DELETE) |
| C633, 634 | 2531053003 | 0.01μF +100,−0% 500V CERAMIC | (DELETE) |
| C359 ~362 | 2531075002 | 0.022μF +80,−20% 50V CERAMIC | (DELETE) |
| | | **OTHER PARTS** | |
| | 5130934009 | FUSE LABEL | (DELETE) |
| | 2020072008 | FUSE HOLDER USED 8 | (CHANGE) |
| | 2061015087 | FUSE (4A) | (DELETE) |
| | 2030226027 | 1P CONTACT ASS'Y | (DELETE) |

ETC0740N E3 for U.S.A., & EC for Canada
(Same as ETC0740B except the followings.)

| Ref. No. | Part No. | Part Name & Descriptions | |
|---|---|---|---|
| | | **CAPACITORS** | |
| C633, 634 | 2531053003 | 0.01μF +100,−0% 500V CERAMIC | (DELETE) |
| C631, 632 | 2531024003 | 0.01μF +80,−20% 50V CERAMIC | (DELETE) |
| C359 ~362 | 2531025002 | 0.022μF +80,−20% 50V CERAMIC | (DELETE) |
| | | **OTHER PARTS** | |
| F301 ~304 | 2061046027 | FUSE 5A (UL) | (CHANGE) |
| ★F601 | 2061046001 | FUSE 6.3A (UL) | (CHANGE) |
| | 2030226027 | 1P CONTACT ASS'Y | (DELETE) |
| (R901)J5 | 2412321032 | 4.7 ohm ±5% 1/4W CARBON | (NB) |
| | 5130854037 | FUSE LABEL | (ADD) |
| | 5130854011 | FUSE LABEL USED 4 | (ADD) |

ETC0740P EA for Australia & EK for U.K.
(Same as ETC0740B except the followings.)

| Ref. No. | Part No. | Part Name & Descriptions | |
|---|---|---|---|
| | | **CAPACITORS** | |
| C633, 634 | 2531053003 | 0.01μF +100,−0% 500V CERAMIC | (DELETE) |
| C631, 632 | 2531024003 | 0.01μF +80,−20% 50V CERAMIC | (DELETE) |
| C359 ~362 | 2531025002 | 0.022μF +80,−20% 50V CERAMIC | (DELETE) |
| | | **OTHER PARTS** | |
| | 2030226027 | 1P CONTACT ASS'Y | (DELETE) |
| F601 | 2061015087 | FUSE (T.4A) MINISEMKO | (DELETE) |
| F602 | 2061015087 | FUSE (T.4A) MINISEMKO | (ADD) |

www.manualscenter.com

• PMA-757
ETC0739B INPUT & EQ. UNIT

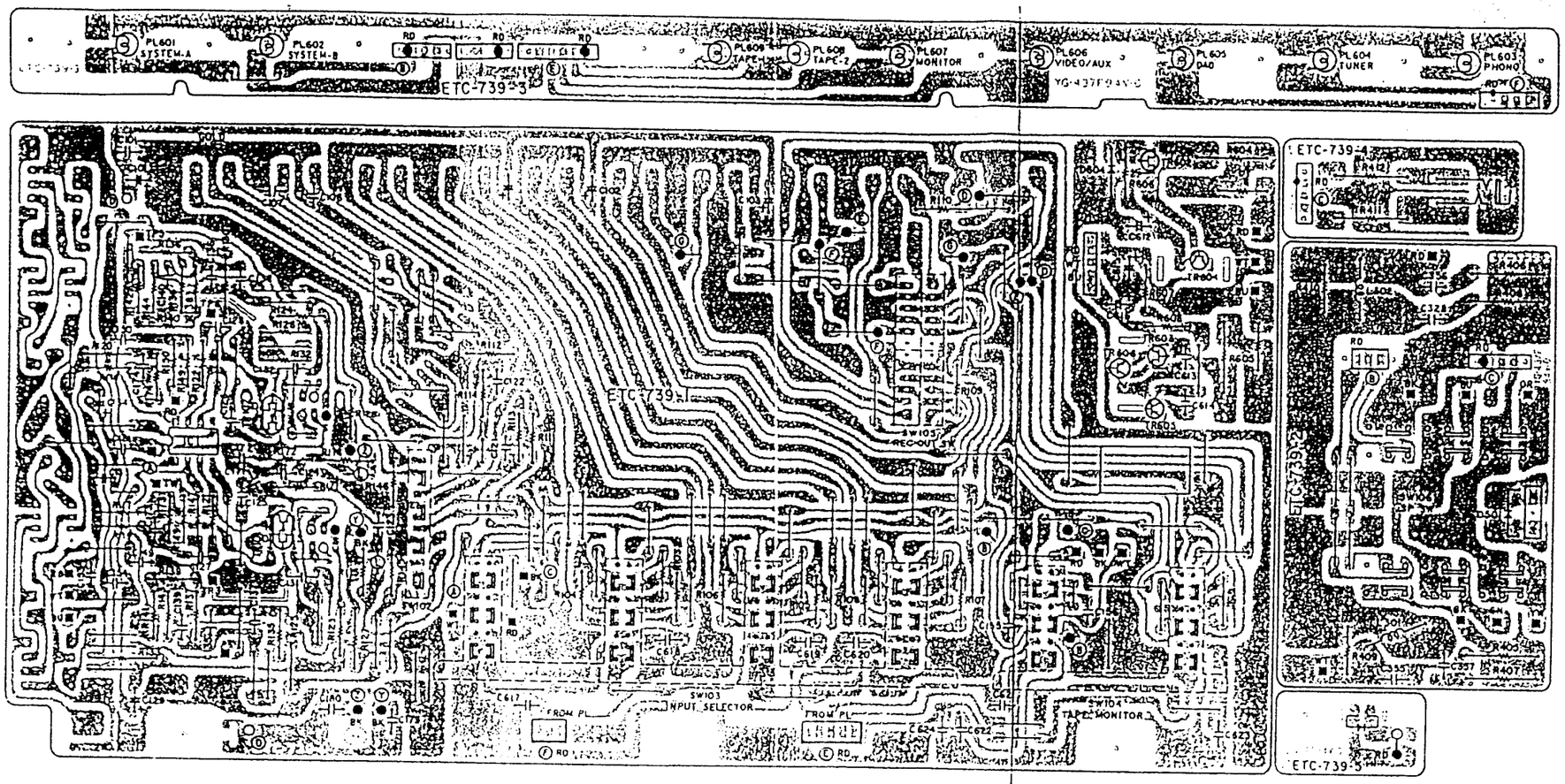


## ETC0739B INPUT & EQ. UNIT PARTS LIST

| Ref. No. | Part No. | Part Name & Descriptions |
|---|---|---|
| | | **SEMICONDUCTORS** |
| IC101 | 2630081015 | NJM4558DX (JRC) IC |
| TR101, 102 | 2750029025 | 2SK240(BL)/(V) FET |
| TR602, 603 | 2750043001 | 2SK381(B)/(C) FET |
| TR604 | 2730236029 | 2SC2824(Y/O) TRANSISTOR |
| TR605 | 2710178039 | 2SA564A(R) TRANSISTOR |
| TR606 | 2710135027 | 2SA1184(Y/O) TRANSISTOR |
| D501 | 2760191008 | W03C DIODE |
| D604 | 2760301005 | HZ22-2 ZENER |
| | | **RESISTORS** |
| R129, 130 | 2420203003 | 10M ohm ±10% 1/4W CARBON COMPOSIT |
| R133 | 2412321003 | 1k ohm ±5% 1/4W CARBON (NB) |
| R405, 408 | 2440021029 | 22 ohm ±5% 1W METAL OXIDE (NB) |
| R411, 412 | 2440030023 | 120 ohm ±5% 1W METAL OXIDE (NB) |
| R604, 605 | 2440036027 | 390 ohm ±5% 1W METAL OXIDE (NB) |
| VR101, 102 | EP-5462H1 | SOLID VR 100 ohm |
| | | **CAPACITORS** |
| C101 103 | 2544145005 | 0.47μF ±20% 50V ELECTROLTYIC |
| C121, 122 | 2531024003 | 0.01μF +80,−20% 50V CERAMIC |
| C127, 128 | 2551121009 | 0.0068μF ±5% 50V PLASTIC FILM |
| C129 | 2544164031 | 220μF ±20% 25V ELECTROLYTIC |
| C131, 132 | 2541010007 | 10μF ±20% 10V TANTALUM |
| C133, 134 | 2544146004 | 1μF ±20% 50V ELECTROLYTIC |
| C135, 136 | 2551121041 | 0.015μF ±5% 50V PLASTIC FILM |
| C137, 138 | 2551120000 | 0.001μF ±5% 50V PLASTIC FILM |
| C139, 140 | 2551122011 | 0.056μF ±5% 50V PLASTIC FILM |
| C149, 150 | 2551120097 | 0.0056μF ±5% 50V PLASTIC FILM |
| C153, 154 | 2531024003 | 0.01μF +80,−20% 50V CERAMIC |
| C181 | 2531024003 | 0.01μF +80,−20% 50V CERAMIC |
| C355, 356 | 2551121025 | 0.01μF ±5% 50V PLASTIC FILM |
| C357, 358 | 2551121067 | 0.022μF ±5% 50V PLASTIC FILM |
| C612 | 2544153000 | 47μF ±20% 50V ELECTROLYTIC |
| C615, 616 | 2544146004 | 1μF ±20% 50V ELECTROLYTIC |
| C617 ~624 | 2531024003 | 0.01μF +80,−20% 50V CERAMIC |
| | | **SWITCHES** |
| SW102 | 2124330007 | SLIDE SW (4-2) REMOTE CARTRIDGE |
| SW103 | 2124512003 | 4P PUSH SW INPUT SEL. |
| SW104 | 2124422009 | 2P PUSH SW TAPE MONITOR |
| SW105 | 2124187001 | SLIDE SW (4-4) REMOTE REC OUT SEL |
| SW106 | 2124510005 | 2P PUSH SW S.P. |
| | | **OTHER PARTS** |
| | 2221091100 | P.W. BOARD |
| | EP-5667H1 | TERMINAL PIN USED 30 |
| | 2090008146 | JUMPER WIRE P=5mm USED 5 |
| | 2090008133 | JUMPER WIRE P=7.5mm USED 2 |
| | 2090008120 | JUMPER WIRE P=10mm USED 100 |
| | 2090008117 | JUMPER WIRE P=12.5mm USED 10 |
| LE501 | 3939154008 | PR5552K-1 (RED) LED |
| L301, 302 | 2350007007 | INDUCTOR |
| PL601 ~609 | 3930083000 | PILOT LAMP 16V 0.04A USED 9 |
| | 4530022208 | LAMP COVER (A) USED 7 |
| | 4530023207 | LAMP COVER (B) USED 1 |
| | 1220109007 | BLIND SHEET |
| | 4410412200 | LED HOLDER |
| | 2034197097 | 3P CONNECTOR CORD |
| | 2034214019 | 3P CONNECTOR CORD |
| | 2034185096 | 3P CONNECTOR CORD |
| | 2034181074 | 3P CONNECTOR CORD |
| | 2034181087 | 3P CONNECTOR CORD |
| | 2038132016 | 5P CONNECTOR CORD |
| RL501 | 2140037009 | RELAY |
| | 2048100009 | HEADPHONE JACK |
| | 2036084001 | 4P CONNECTOR BASE |
| | 2040079002 | 6P CONNECTOR BASE USED 2 |
| | 4140240001 | EARTH PLATE |
| | 2048059008 | DIN JACK (5P) |
| | 4170043100 | RADIATOR USED 2 |
| | 4730354019 | TAPPING SCREW (2) 3x8 USED 2 |
| | 2050190036 | 3P NH CONNECTOR BASE USED 2 |
| | 2050190052 | 5P NH CONNECTOR BASE |
| | 2050185038 | 3P WIRE HOLDER USED 7 |
| | 2050185054 | 5P WIRE HOLDER |
| | 2030225073 | 1P CONTACT ASS'Y |

## ETC0739N E3 for U.S.A., and EC for Canada
(Same as ETC0739B except the followings.)

| Ref. No. | Part No. | Part Name & Descriptions |
|---|---|---|
| | | **RESISTORS** |
| R109, 110 | 2412156003 | 470k ohm ±5% 1/4W CARBON (DELETE) |
| R171, 172 | 2090008120 | JUMPER WIRE P=10mm (CHANGE) |
| R121, 122 | 2412090004 | 820 ohm ±5% 1/4W CARBON (DELETE) |
| R149, 150 | 2412068007 | 100 ohm ±5% 1/4W CARBON (DELETE) |



www.manualscenter.com

• PMA-757

## ETC0738B TONE & POWER UNIT PARTS LIST

| Ref. No. | Part No. | Part Name & Descriptions |
|---|---|---|
| | | SEMICONDUCTORS |
| TR221, 222 | 2750046008 | 2SK170(BL)/(V)DVGS FET |
| IC301 ~304 | 2630257001 | M-5218P (MITSUBISHI) IC |
| TR201, 202 | 2750046008 | 2SK170(BL)/(V)DVGS FET |
| TR203 ~206 | 2730235020 | 2SC1841(E/F) TRANSISTOR |
| TR207 ~210 | 2710131021 | 2SA988(E/F) TRANSISTOR |
| TR211, 212 | 2730235020 | 2SC1841(E/F) TRANSISTOR |
| TR213, 214 | 2730307000 | 2SC2229(O)/(Y) TRANSISTOR |
| TR215, 216 | 2710185006 | 2SA949(O)/(Y) TRANSISTOR |
| TR301, 302 | 2730198015 | 2SC1815(BL) TRANSISTOR |
| TR303, 304 | 2730307000 | 2SC2229(O)/(Y) TRANSISTOR |
| TR305, 306 | 2710185006 | 2SA949(O)/(Y) TRANSISTOR |
| TR307, 308 | 2730226042 | 2SC2275(O)/(P) TRANSISTOR |
| TR309, 310 | 2710123042 | 2SA985(O)/(P) TRANSISTOR |
| D205 ~210 | 2760049008 | 1S2076 DIODE |
| D301 ~304 | 2760253001 | HZ15-2 ZENER |
| D305 ~308 | 2760049008 | 1S2076 DIODE |
| D309, 310 | 2760388002 | MV-1YH DIODE |
| D311, 312 | 2760236031 | HZ5C-1 ZENER |
| D317 ~336 | 2760049008 | 1S2076 DIODE |
| | | RESISTORS (not included Carbon ±5%, 1/4W Type) |
| R209, 210 | 2420203003 | 10M ohm ±10% 1/4W CARBON COMPOSIT |
| ⚠ R211, 212 | 2412214023 | 470 ohm ±5% 1/4W CARBON (NB) |
| ⚠ R223, 224 | 2412214023 | 470 ohm ±5% 1/4W CARBON (NB) |
| ⚠ R231, 232 | 2412216047 | 150 ohm ±5% 1/4W CARBON (FR) |
| ⚠ R233, 234 | 2412216047 | 150 ohm ±5% 1/4W CARBON (FR) |
| ⚠ R239, 240 | 2410155023 | 15 ohm ±5% 1W METAL OXIDE (NB) |
| ⚠ R241, 242 | 2412216018 | 120 ohm ±5% 1/4W CARBON (FR) |
| ⚠ R245, 246 | 2412212018 | 22 ohm ±5% 1/4W CARBON (NB) |
| R390, 391, 395, 396 | 2090008120 | JUMPER WIRE P=10mm |

| Ref. No. | Part No. | Part Name & Descriptions |
|---|---|---|
| ⚠ R301, 302 | 2410103028 | 27k ohm ±5% 2W METAL OXIDE (NB) |
| ⚠ R305, 306 | 2412221045 | 220 ohm ±5% 1/4W CARBON (NB) |
| ⚠ R309, 310 | 2412227003 | 1k ohm ±5% 1/4W CARBON (NB) |
| ⚠ R345, 348 | 2412213053 | 1 ohm ±5% 1/4W CARBON (FR) |
| ⚠ R349, 350 | 2412227003 | 1k ohm ±5% 1/4W CARBON (NB) |
| ⚠ R353, 354 | 2412213008 | 100 ohm ±5% 1/4W CARBON (FR) |
| ⚠ R359, 360 | 2410029021 | 100 ohm ±5% 1W METAL OXIDE (NB) |
| ⚠ R363, 366 | 2412221032 | 47 ohm ±5% 1/4W CARBON (NB) |
| ⚠ R365, 368 | 2412029003 | 0.22 ohm ±5% 2W METAL OXIDE (NB) |
| ⚠ R421, 422 | 2412214007 | 100 ohm ±5% 1/4W CARBON (NB) |
| VR201 | 2110424008 | VARIABLE RESISTOR 100k ohm MAIN |
| VR202 | 2110198004 | VARIABLE RESISTOR 250k ohm BALANCE |
| VR203 | 2110309107 | VARIABLE RESISTOR 50k ohm TREBLE |
| VR204 | 2110309110 | VARIABLE RESISTOR 100k ohm BASS |
| VR301, 302 | 2116025087 | SEMI-IFXED RESISTOR 4.7k ohm IDLE |
| VR303, 304 | 2116025016 | SEMI-IFXED RESISTOR 100 ohm DISTORTION |
| | | CAPACITORS (not included Ceramic ±5%, ±10%, 50V Type) |
| C201, 202 | 2551122040 | 0.1μF ±5% 50V PLASTIC FILM |
| C203, 204 | 2551122037 | 0.082μF ±5% 50V PLASTIC FILM |
| C207, 208 | 2551120000 | 0.001μF ±5% 50V PLASTIC FILM |
| C209, 210 | 2551120084 | 0.0047μF ±5% 50V PLASTIC FILM |
| C213, 214 | 2544146004 | 1μF ±20% 50V ELECTROLYTIC |
| C215, 216 | 2554079048 | 0.01μF ±5% 100V PLASTIC FILM |
| C217, 218 | 2534269001 | 10pF ±0.5pF 500V CERAMIC |
| C219, 220 | 2544181001 | 1μF ±20% 100V ELECTROLYTIC |
| C223, 224 | 2551121009 | 0.0068μF ±5% 50V PLASTIC FILM |
| C225, 226 | 2551122011 | 0.056μF ±5% 50V PLASTIC FILM |
| C229, 230 | 2551120013 | 0.0012μF ±5% 50V PLASTIC FILM |
| C231, 232 | 2551121096 | 0.039μF ±5% 50V PLASTIC FILM |
| C233, 234 | 2551122095 | 0.27μF ±5% 50V PLASTIC FILM |
| C239, 240 | 2543016067 | 10μF ±20% 50V ELECTROLYTIC (B. POLE) |
| C241, | 2544181001 | 1μF ±20% 100V ELECTROLYTIC |
| C243 | 2544181001 | 1μF ±20% 100V ELECTROLYTIC |
| C301 ~304 | 2544089002 | 100μF ±20% 50V ELECTROLYTIC |



| Ref. No. | Part No. | Part Name & Descriptions |
|---|---|---|
| | | CAPACITORS |
| C106, 107 | 2533639001 | 330pF ±5% 50V CERAMIC (DELETE) |
| C121, 122 | 2531024003 | 0.01μF +80,−20% 50V CERAMIC (DELETE) |
| C125, 126 | 2533645008 | 560pF ±5% 50V CERAMIC (DELETE) |
| C127, 128 | 2551120084 | 0.0047μF ±5% 50V PLASTIC FILM (CHANGE) |
| C155, 156 | 2533643000 | 470pF ±5% 50V CERAMIC (DELETE) |
| C171, 172 | 2533636004 | 240pF ±5% 50V CERAMIC (DELETE) |
| C173, 174 | 2533627000 | 100pF ±5% 50V CERAMIC (DELETE) |
| C175 | 2533629008 | 120pF ±5% 50V CERAMIC (DELETE) |
| C176 | 2533631009 | 150pF ±5% 50V CERAMIC (DELETE) |
| C177 | 2531054031 | 0.0012μF ±10% 50V CERAMIC (DELETE) |
| | | OTHER PARTS |
| | 2030225073 | 1P CONTACT ASS'Y (DELETE) |
| | 2048059008 | DIN JACK (5P) (DELETE) |
| | 2090008120 | JUMPER WIRE P=10mm USED 102 (CHANGE) |

### ETC0739M E1 for Asia
(Same as ETC0739B except the followings.)

| Ref. No. | Part No. | Part Name & Descriptions |
|---|---|---|
| | | RESISTORS |
| R109, 110 | 2412156003 | 470k ohm ±5% 1/4W CARBON (DELETE) |
| R121, 122 | 2412090004 | 820 ohm ±5% 1/4W CARBON (CHANGE) |
| R149, 150 | 2412068007 | 100 ohm ±5% 1/4W CARBON (CHANGE) |
| R171, 172 | 2090008120 | JUMPER WIRE P=10mm (CHANGE) |
| | | CAPACITORS |
| C106, 107 | 2533639001 | 330pF ±5% 50V CERAMIC (DELETE) |
| C155, 156 | 2533643000 | 470pF ±5% 50V CERAMIC (DELETE) |
| C125, 126 | 2533645008 | 560pF ±5% 50V CERAMIC (DELETE) |
| C127, 128 | 2551120084 | 0.0047μF ±5% 50V PLASTIC FILM (CHANGE) |
| C121, 122 | 2531024003 | 0.01μF +80,−20% 50V CERAMIC (DELETE) |
| C177 | 2531054031 | 0.0012μF ±10% 50V CERAMIC (DELETE) |
| C171, 172 | 2533636004 | 240pF ±5% 50V CERAMIC (DELETE) |
| C173, 174 | 2533627000 | 100pF ±5% 50V CERAMIC (DELETE) |

| Ref. No. | Part No. | Part Name & Descriptions |
|---|---|---|
| C175 | 2533629008 | 120pF ±5% 50V CERAMIC (DELETE) |
| C176 | 2533631009 | 150pF ±5% 50V CERAMIC (DELETE) |
| | | OTHER PARTS |
| | 2030225073 | 1P CONTACT ASS'Y (DELETE) |
| | 2048059008 | DIN JACK (5P) (DELETE) |
| | 2090008120 | JUMPER WIRE USED 102 (CHANGE) |

### ETC0739P EA for Australia and EK for U.K.
(Same as ETC0739B except the followings.)

| Ref. No. | Part No. | Part Name & Descriptions |
|---|---|---|
| | | RESISTORS |
| R121, 122 | 2412090004 | 820 ohm ±5% 1/4W CARBON (CHANGE) |
| R149, 150 | 2412068007 | 100 ohm ±5% 1/4W CARBON (CHANGE) |
| R171, 172 | 2090008120 | JUMPER WIRE P=10mm (CHANGE) |
| | | CAPACITORS |
| C106, 107 | 2533639001 | 330pF ±5% 50V CERAMIC (DELETE) |
| C155, 156 | 2533643000 | 470pF ±5% 50V CERAMIC (DELETE) |
| C125, 126 | 2533645008 | 560pF ±5% 50V CERAMIC (DELETE) |
| C127, 128 | 2551120084 | 0.0047μF ±5% 50V PLSTIC FILM (CHANGE) |
| C121, 122 | 2531024003 | 0.01μF +80,−20% 50V CERAMIC (DELETE) |
| C177 | 2531054031 | 0.0012μF ±5% 50V CERAMIC (DELETE) |
| C171, 172 | 2533636004 | 240pF ±5% 50V CERAMIC (DELETE) |
| C173, 174 | 2533627000 | 100pF ±5% 50V CERAMIC (DELETE) |
| C176 | 2533631009 | 150pF ±5% 50V CERAMIC (DELETE) |
| C175 | 2533629008 | 120pF ±5% 50V CERAMIC (DELETE) |
| | | OTHER PARTS |
| | 2030225073 | 1P CONTACT ASS'Y (DELETE) |
| | 2090008120 | JUMPER WIRE P=10mm USED102 (CHANGE) |

# ETC0738B TONE & POWER UNIT

| Ref. No. | Part No. | Part Name & Descriptions |
|---|---|---|
| C311, C326, C327, C330, C331, C334, C339, C342, C343, C346 | 2544146004 | 1μF ±20% 50V ELECTROLYTIC |
| | 2551120026 | 0.0015μF ±5% 50V PLASTIC FILM |
| | 2534482008 | 33pF ±5% 500V CERAMIC |
| | 2551121025 | 0.01μF ±5% 50V PLASTIC FILM |
| | 2561030070 | 0.1μF ±5% 100V PLASTIC FILM |
| **SWITCHES** | | |
| W201 | 2120221000 | ROTARY SWITCH MODE |
| W202 | 2124511004 | 2P PUSH SWITCH LOUD, SUB |
| W203 | 2124462001 | 1P PUSH SWITCH DIRECT |
| **OTHER PARTS** | | |
| | 2221090101 | P.W. BOARD |
| | EP-5667H1 | TERMINAL PIN USED 40 |
| | 2090008120 | JUMPER WIRE P=10mm USED 60 |
| | 2030230039 | 1P CONNECTOR |
| | 2050185038 | 3P WIRE HOLDER USED 6 |
| | 2050185041 | 4P WIRE HOLDER |
| | 2050185054 | 5P WIRE HOLDER USED 2 |
| | 4711303018 | 3x6 CPS USED 2 |
| | 4756006008 | 3N USED 2 |

NOTE: "*" parts not used for E2 model.

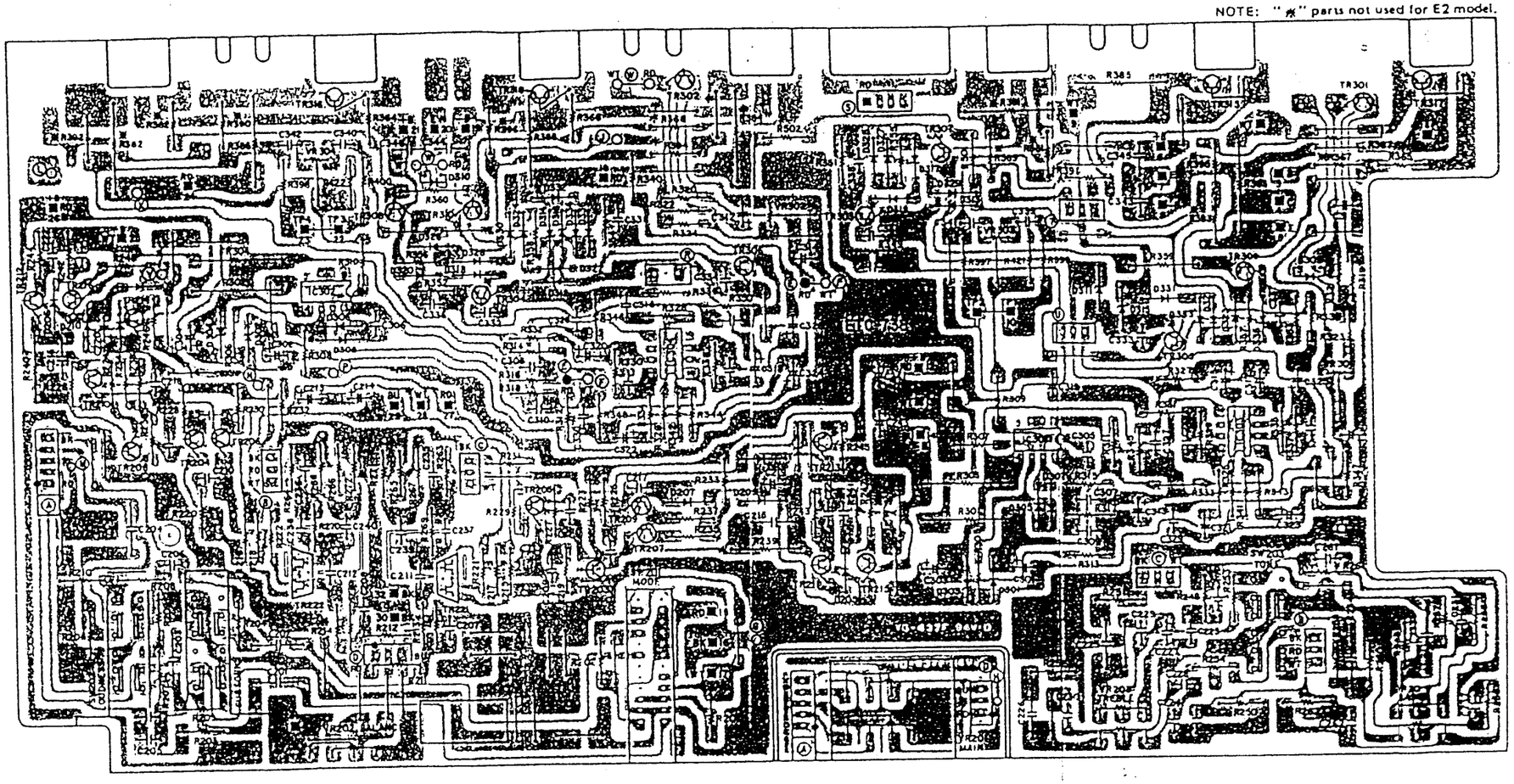

## ETC0738M E1 for Asia
(Same as ETC0738B except the followings.)

| Ref. No. | Part No. | Part Name & Descriptions |
|---|---|---|
| **SEMICONDUCTORS** | | |
| D313 ~316 | 2760236031 | HZ5C-1 ZENER (ADD) |
| **RESISTORS** | | |
| R219, 220 | 2412065000 | 75 ohm ±5% 1/4W CARBON (CHANGE) |
| R361, 362, 367, 368 | 2412321032 | 4.7 ohm ±5% 1/4W CARBON (NB) (ADD) |
| R381, 387 | 2442029003 | 0.22 ohm ±5% 2W METAL (NB) (ADD) |
| R389, 390 | 2412321016 | 22 ohm ±5% 1/4W CARBON (NB) (ADD) |

## ETC0738N E3 for U.S.A., and EC for Canada
(Same as ETC0738B except the followings.)

| Ref. No. | Part No. | Part Name & Descriptions |
|---|---|---|
| **SEMICONDUCTORS** | | |
| D313 ~316 | 2760236031 | HZ5C-1 ZENER (ADD) |
| **RESISTORS** | | |
| R219, 220 | 2412065000 | 75 ohm ±5% 1/4W CARBON (CHANGE) |
| R361, 362, 367, 368 | 2412321032 | 4.7 ohm ±5% 1/4W CARBON (NB) (ADD) |
| R381, 387 | 2442029003 | 0.22 ohm ±5% 2W METAL (NB) (ADD) |
| R389, 390 | 2412321016 | 22 ohm ±5% 1/4W CARBON (NB) (ADD) |
| **CAPACITORS** | | |
| C241, 243 | 2544203002 | 1μF ±20% 160V ELECTROLYTIC (CHANGE) |

## ETC0738P EA for Australia and EK for U.K.
(Same as ETC0738B except the followings.)

| Ref. No. | Part No. | Part Name & Descriptions |
|---|---|---|
| **SEMICONDUCTORS** | | |
| D313 ~316 | 2760236031 | HZ5C-1 ZENER (ADD) |
| **RESISTORS** | | |
| R219, 220 | 2412065000 | 75 ohm ±5% 1/4W CARBON (CHANGE) |
| R361, 362, 367, 368 | 2412321032 | 4.7 ohm ±5% 1/4W CARBON (NB) (ADD) |
| R381, 387 | 2442029003 | 0.22 ohm ±5% 2W METAL (NB) (ADD) |
| R389, 390 | 2412321016 | 22 ohm ±5% 1/4W CARBON (NB) (ADD) |


www.manualscenter.com

CONNECTION DIAGRAM

- PMA-757

This figure is E2 version

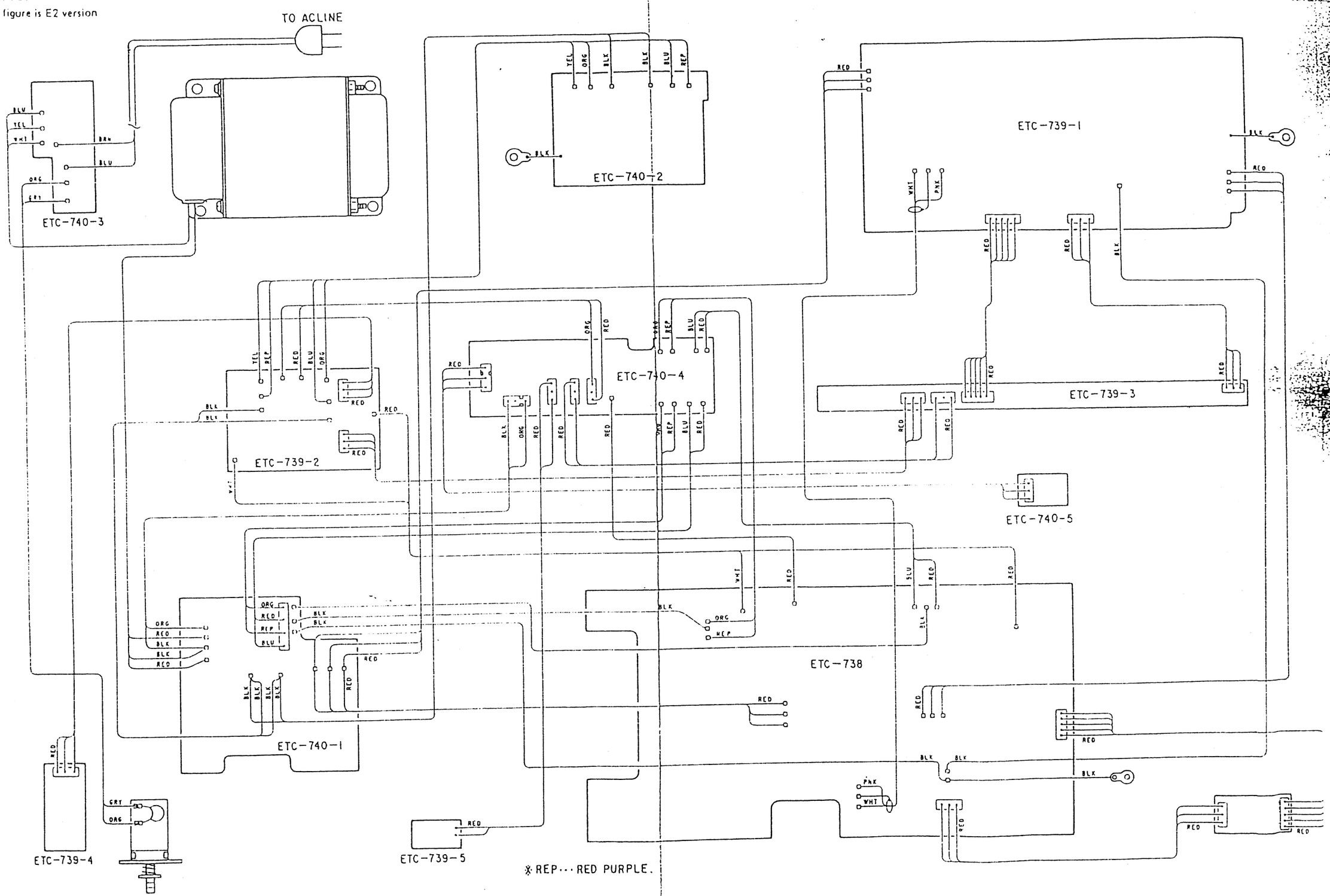


※REP···RED PURPLE.

www.manualscenter.com

# PMA-777 WIRING DIAGRAM

⚠ ▒ Means important safety item, which must be replaced, when necessary, by a part specified or meeting the specification by the manufacturer.

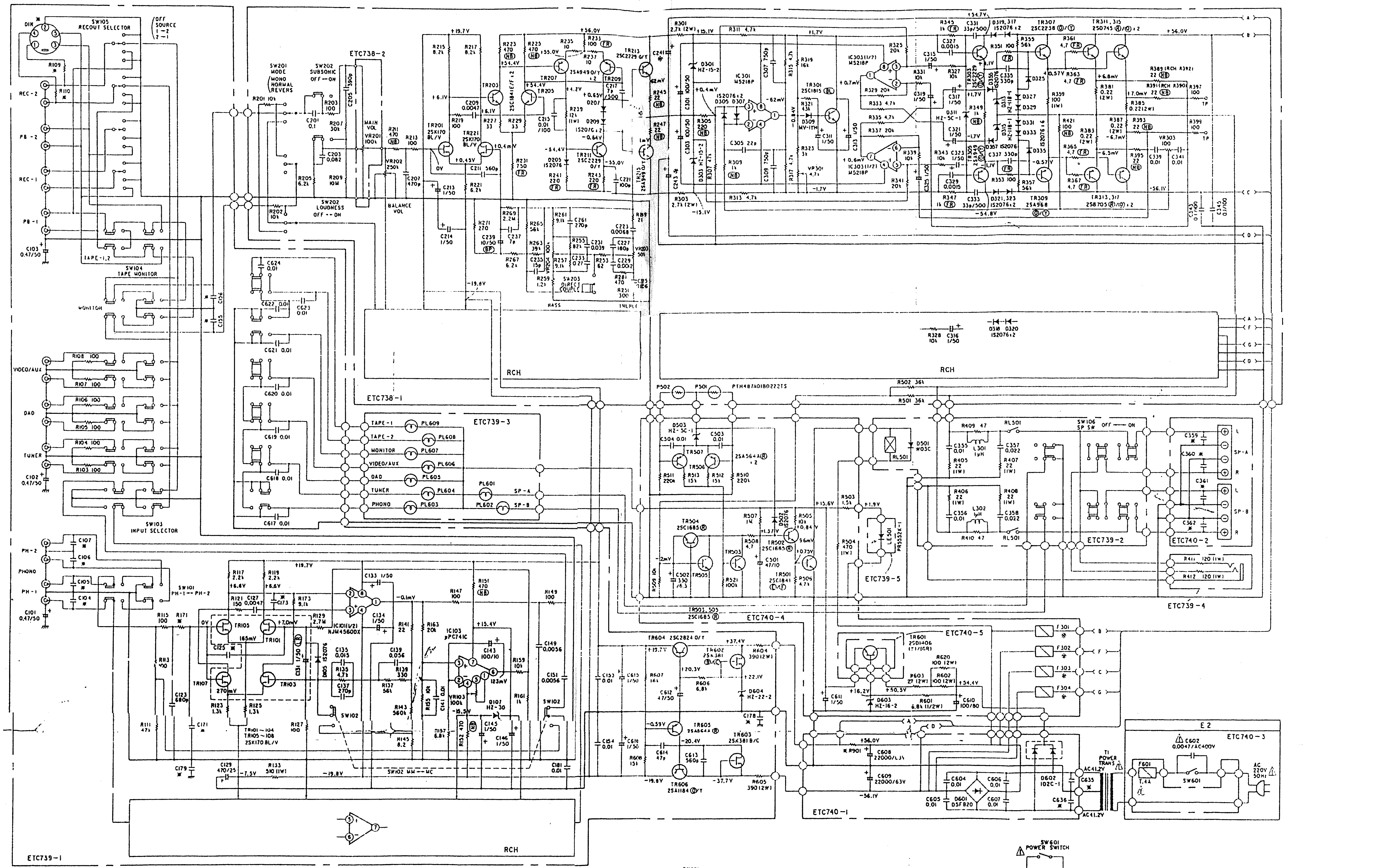


| | ETC-739 | | | | | | | | | | | | | | | | | | | ETC-738 | | | | ETC-740 | | | |
|---|---|---|---|---|---|---|---|---|---|---|---|---|---|---|---|---|---|---|---|---|---|---|---|---|---|---|---|
| | DIN | R109 R110 | C155 C156 | C104 ~ C107 | C173 C174 | C125 C126 | C178 C179 C180 | R171 R172 | C171 C172 | | | | | | | | | | | C241 C243 | | | | C359 ~ C362 | C635 C636 | R901 | F301 ~ F304 |
| E2 | INCLUDE | 470k | 470p | 430p | 47p | 560p | 0.01 | 4.7 | 240p | | | | | | | | | | | 1/100 | | | | 0.01 | 0.1/ AC250V | JUMPER | F6.3A |
| E3 (E1) | — | — | — | — | — | — | — | JUMPER | — | | | | | | | | | | | 1/160 (1/100) | | | | — | — | 4.7 (NB) (JUMPER) | 6.3A (F6.3A) |
| EK, EA | INCLUDE | 470k | — | — | — | — | — | JUMPER | — | | | | | | | | | | | 1/100 | | | | — | — | JUMPER | F6.3A |

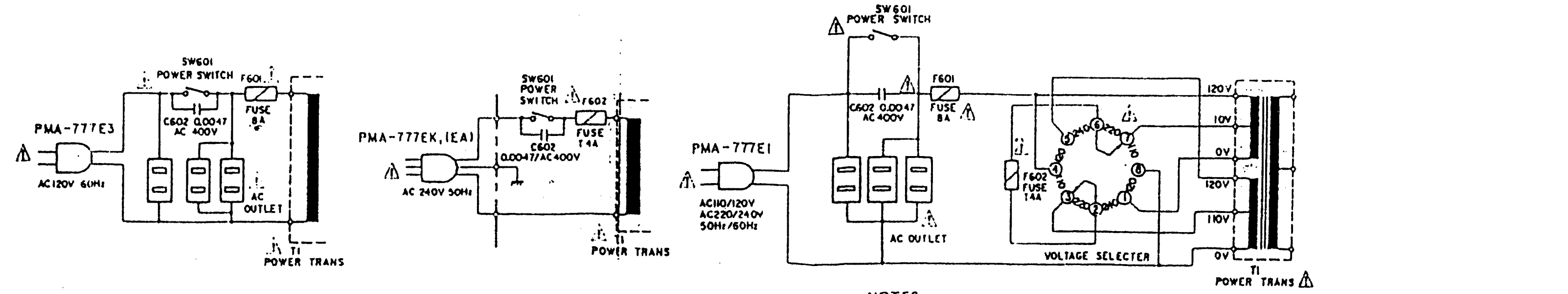


NOTES
ALL RESISTANCE VALUES IN OHM K = 1,000 OHM M = 1,000,000 OHM

www.manualscenter.com

# PMA—757 WIRING DIAGRAM

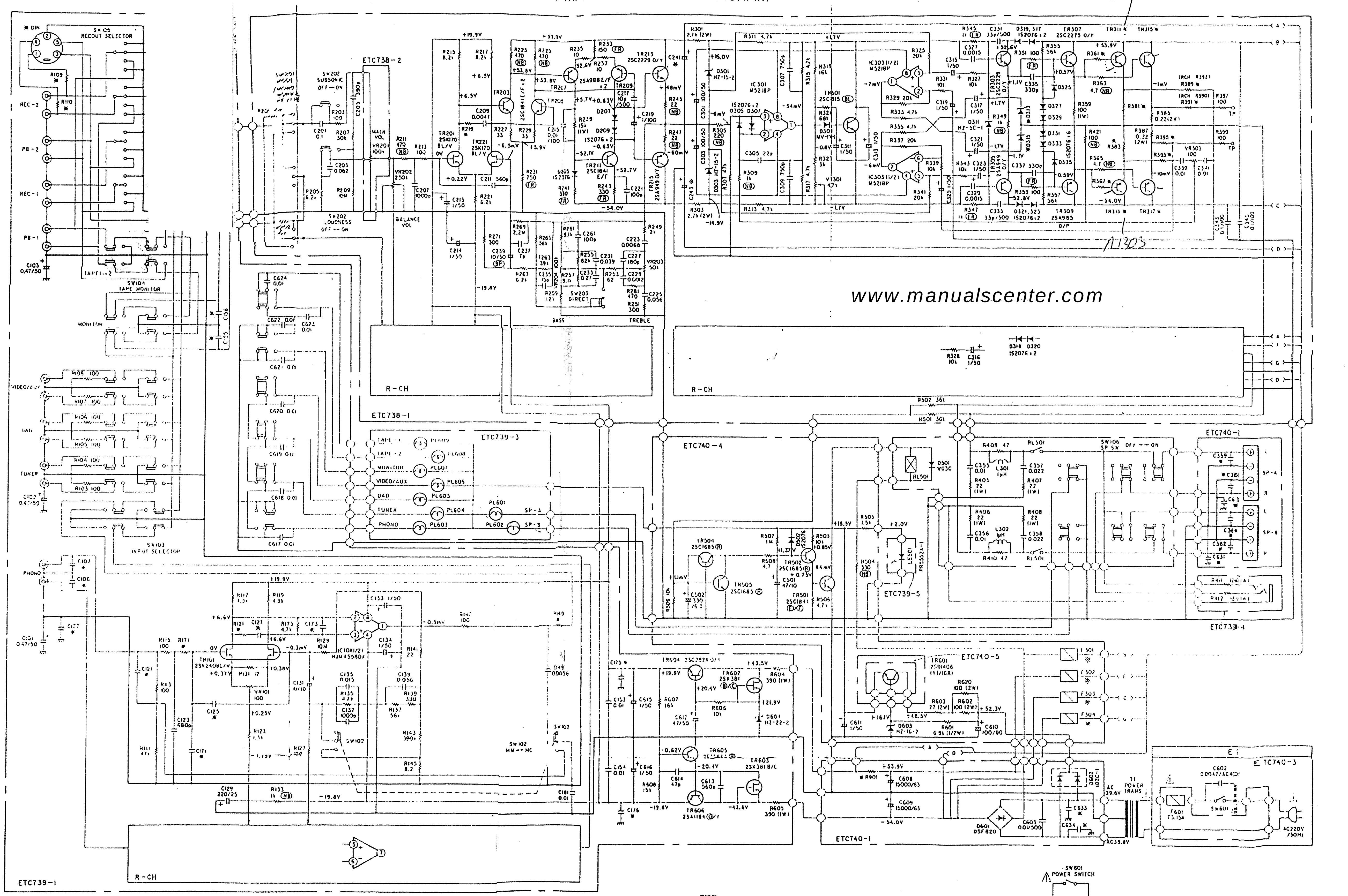


www.manualscenter.com

| | ETC-739 | | | | | | | | | | | | | | | | | | ETC-738 | | | | | | | | | | | | | | ETC-740 | | | | |
|---|---|---|---|---|---|---|---|---|---|---|---|---|---|---|---|---|---|---|---|---|---|---|---|---|---|---|---|---|---|---|---|---|---|---|---|---|---|
| | DIN | R109 R110 | C155 C156 | C106 C107 | C173 C174 | C125 C126 | C177 | R171 R172 | C171 C172 | C121 C122 | | R121 R122 | C127 C128 | | | C175 | C176 | R149 R150 | | C241 C243 | R219 R220 | | D313 ~ D316 | [illegible] | [illegible] | R381 ~ R384 | [illegible] | TR311 TR312 | TR315 TR316 | TR313 TR314 | TR317 TR318 | | C359 ~ C362 | C631 C632 | C633 C634 | R901 | F301 ~ F304 |
| E2 | INCLUDE | 470k | 470p | 330p | 100p | 560p | 0.0012 | 4.7 | 240p | 0.01 | | 510 | 0.0068 | | | 120p | 150p | 200 | | 1/100 | 240 | | DELETE | JUMPER | DELETE | DELETE | DELETE | DELETE | 2SC3284 O/Y | DELETE | 2SA1303 O/Y | | 0.022 | 0.01 | 0.01/500V | JUMPER | F5A |
| E3, EC | — | — | — | — | — | — | — | JUMPER | — | — | | 820 | 0.0047 | | | — | — | 100 | | 1/160 | 75 | | HZ5C-1 | 22 (NB) | 22 (NB) | 0.22/2W | 4.7 (NB) | 2SD1110 R/O | 2SD1110 R/O | 2SB849 R/O | 2SB849 R/O | | — | — | — | 4.7 (NB) | 5A |
| EK, EA | INCLUDE | 470k | — | — | — | — | — | JUMPER | — | — | | 820 | 0.0047 | | | — | — | 100 | | 1/100 | 75 | | HZ5C-1 | 22 (NB) | 22 (NB) | 0.22/2W | 4.7 (NB) | 2SD1110 R/O | 2SD1110 R/O | 2SB849 R/O | 2SB849 R/O | | — | — | — | JUMPER | F5A |
| EI, [illegible] | — | — | — | — | — | — | — | JUMPER | — | — | | 820 | 0.0047 | | | — | — | 100 | | 1/100 | 75 | | HZ5C-1 | 22 (NB) | 22 (NB) | 0.22/2W | 4.7 (NB) | 2SD1110 R/O | 2SD1110 R/O | 2SB849 R/O | 2SB849 R/O | | — | — | — | JUMPER | F5A |

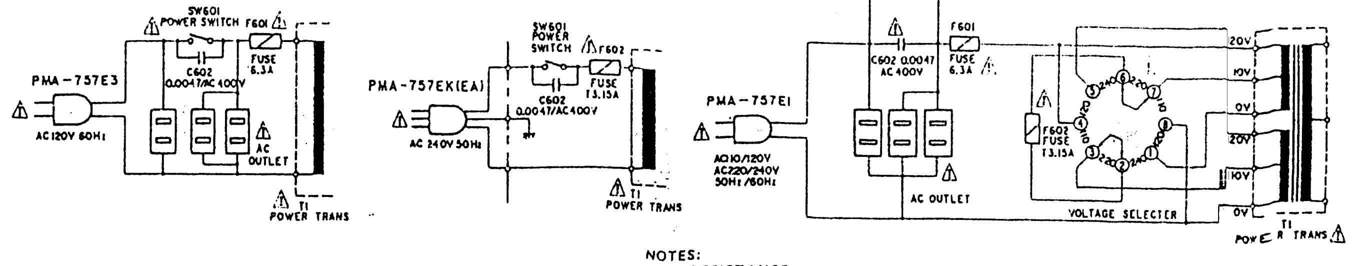


NOTES:
ALL RESISTANCE VALUES IN OHM, K = 1,000 OHM, M = 1,000,000 OHM
ALL CAPACITANCE VALUES IN MICROFARAD, P = MICRO-MICROFARAD
EVERY VOLTAGES AND CURRENTS IS MEASURED AT NO SIGNAL INPUT CONDITION.
CIRCUIT AND PARTS ARE SUBJECT TO CHANGE WITHOUT PRIOR NOTICE

www.manualscenter.com



## EXPLODED VIEW OF CHASSIS AND CABINET

• PMA-777

⚠ ▩ Meant important safety item, which must b
when necessary, by a part specified or meeting the s
by the manufacturer.

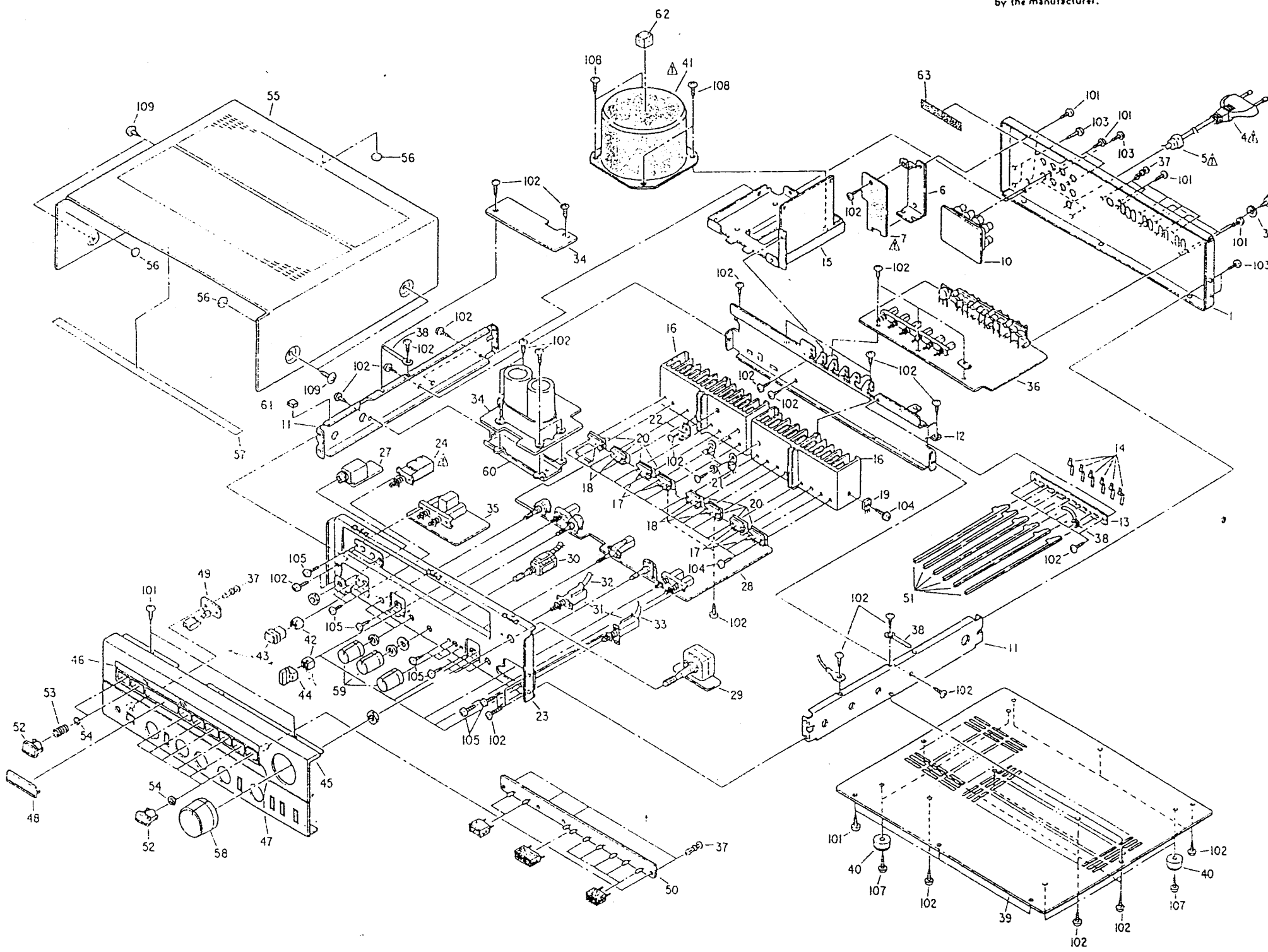

Note: 1. See addendum list below for the parts with asterisk (*) on the Ref. No. and the other parts not included in this list.
2. The list is prepared based on E2 Silver Version
3. ⊕ Marked not included EXPLODED VIEW.
4. o Marked same as PMA-757E2.

## EXPLODED VIEW OF PARTS LIST

| Ref. No. | Part No. | Part Name & Descriptions |
|---|---|---|
| *1 | 1050626307 | BACK PANEL |
| ⊕ 2 | 2050071016 | TERMINAL ASS'Y |
| o 3 | 4770018001 | WASHER (P-87) |
| [redacted] | | |
| [redacted] | | |
| ⊕ *6 | 4410455005 | PWB BRACKET |
| [redacted] | | |
| o ⊕8 | 5130716023 | FTZ LABEL |
| o ⊕9 | 5138253009 | APPROVAL MARK |
| *10 | ETC0740-2 | SP TERMINAL UNIT |
| o 11 | 4120733606 | SIDE CHASSIS |
| o 12 | 4110375317 | MAIN CHASSIS |
| o 13 | 4410378108 | SHEET |
| ⊕ 14 | 4630337000 | SPRING |
| o 15 | 4110334206 | TRANS CHASSIS ASS'Y |
| 16 | 4170153401 | POWER RADIATOR |
| 17 | 2740102004 | TRANSISTOR 2SD745(R/O) |
| 18 | 2720073001 | TRANSISTOR 2SB705(R/O) |
| 19 | 2740088018 | TRANSISTOR 2SD1406(Y)/(GR) |
| 20 | 4150291008 | INSULATING SHEET (S-27) |
| 21 | 2760289004 | POSISTOR (PTH487A018D222TS) |
| ⊕ 22 | 4410411104 | PCB BRACKET |
| ⊕ 23 | 4110429302 | FRONT CHASSIS |
| [redacted] | | |
| [redacted] | | |
| ⊕ ⊕26 | 4450033005 | WIRE CLAMP BAND USED 36 |
| ⊕ *27 | ETC0739-4 | HEADPHONE JACK UNIT |
| *28 | ETC0738-1 | TONE & POWER UNIT |

| Ref. No. | Part No. | Part Name & Descriptions |
|---|---|---|
| *29 | ETC0738-2 | MAIN VR UNIT |
| o 30 | 2120222009 | ROTARY REMOTE |
| o 31 | 2124484005 | 1P-PUSH REMOTE |
| o 32 | 4350052005 | FLEXIBLE SLIDER (MM-MC) |
| 33 | 4350052021 | FLEXIBLE SLIDER (PHONO 1-2) |
| *34 | ETC0740 | P.S & PROT. UNIT |
| *35 | ETC0739-2 | SPEAKER SW UNIT |
| *36 | ETC0739-1 | INPUT & EQ. UNIT |
| o 37 | 4770096007 | PUSH RIVET |
| o 38 | EP-6214 | CORD HOLDER |
| o 39 | 1050450609 | BOTTOM COVER |
| o 40 | 1040110001 | FOOT |
| [redacted] | | |
| o 42 | 1140056007 | FLEXIBLE RING |
| o *43 | 1130515134 | PUSH KNOB (A) |
| o *44 | 1130450118 | PUSH KNOB (B) ASS'Y |
| *45 | 1441257000 | FRONT PANEL ASS'Y |
| o 46 | 1430297013 | WINDOW |
| o 47 | 1460556106 | WINDOW PANEL |
| *48 | 1441256001 | ESC. PLATE |
| o *49 | ETC0739-5 | LED UNIT |
| o *50 | ETC0739-3 | LAMP UNIT |
| o 51 | 4121069007 | CONNECTING BRACKET |
| o *52 | 1130415218 | PUSH KNOB (C) |
| o 53 | 4630274011 | SPRING |
| o 54 | 1220039012 | SPACER |
| o *55 | 1020183100 | TOP COVER |

| Ref. No. | Part No. | Part Name & Descriptions |
|---|---|---|
| o 56 | 1040034006 | STOPPER |
| o 57 | 1220069008 | SPACER |
| o *58 | 1120415011 | KNOB (A) |
| o *59 | 1120416010 | KNOB (B) |
| o 60 | 4120952102 | CONDENSER BRACKET |
| o 61 | 4610223024 | RUBBER SHEET |
| 62 | 4610223011 | RUBBER SHEET |
| o 63 | 1220069066 | SPACER |
| 64 | | |
| 65 | | |
| 66 | | |
| 67 | | |
| 68 | | |
| 69 | | |
| 70 | | |
| PACKING & ACCESSORIES (not included EXPLODED VIEW) | | |
| o *a. | 5040084007 | SET COVER |
| o *b. | 5030456001 | CUSHION |
| o c. | 5111253107 | INST. MANUAL |
| o d. | 5139111001 | COLOR LABEL (GOLD) |
| o e. | 5130295009 | CONTROL CARD |
| *f. | 5010916037 | CARTON CASE |

| Ref. No. | Part No. | Part Name & Descriptions | Q'ty |
|---|---|---|---|
| SCREWS & NUT | | | |
| o *101 | 4730354035 | TAPPING SCREW (2) 3x8 (BLACK) | 22 |
| o 102 | 4730354019 | TAPPING SCREW (2) 3x8 | 33 |
| o 103 | 4770064107 | FIXING SCREW | 6 |
| 104 | 4700011023 | PAN SCREW WITH W. SPW 3x10 | 17 |
| o 105 | 4711303018 | PAN SCREW 3x6 | 13 |
| o 107 | 4730804035 | TAPPING SCREW (2) 3x14 | 4 |
| o 108 | 4700031016 | TAPPING SCREW WITH TWB 4x10 | 4 |
| o *109 | 4734801005 | TAPPING SCREW (TRUS) 4x8 | 4 |
| 110 | | | |
| 111 | | | |
| 112 | | | |

⚠ ▩ Meant important safety item, which must be replaced, when necessary, by a part specified or meeting the specification by the manufacturer.

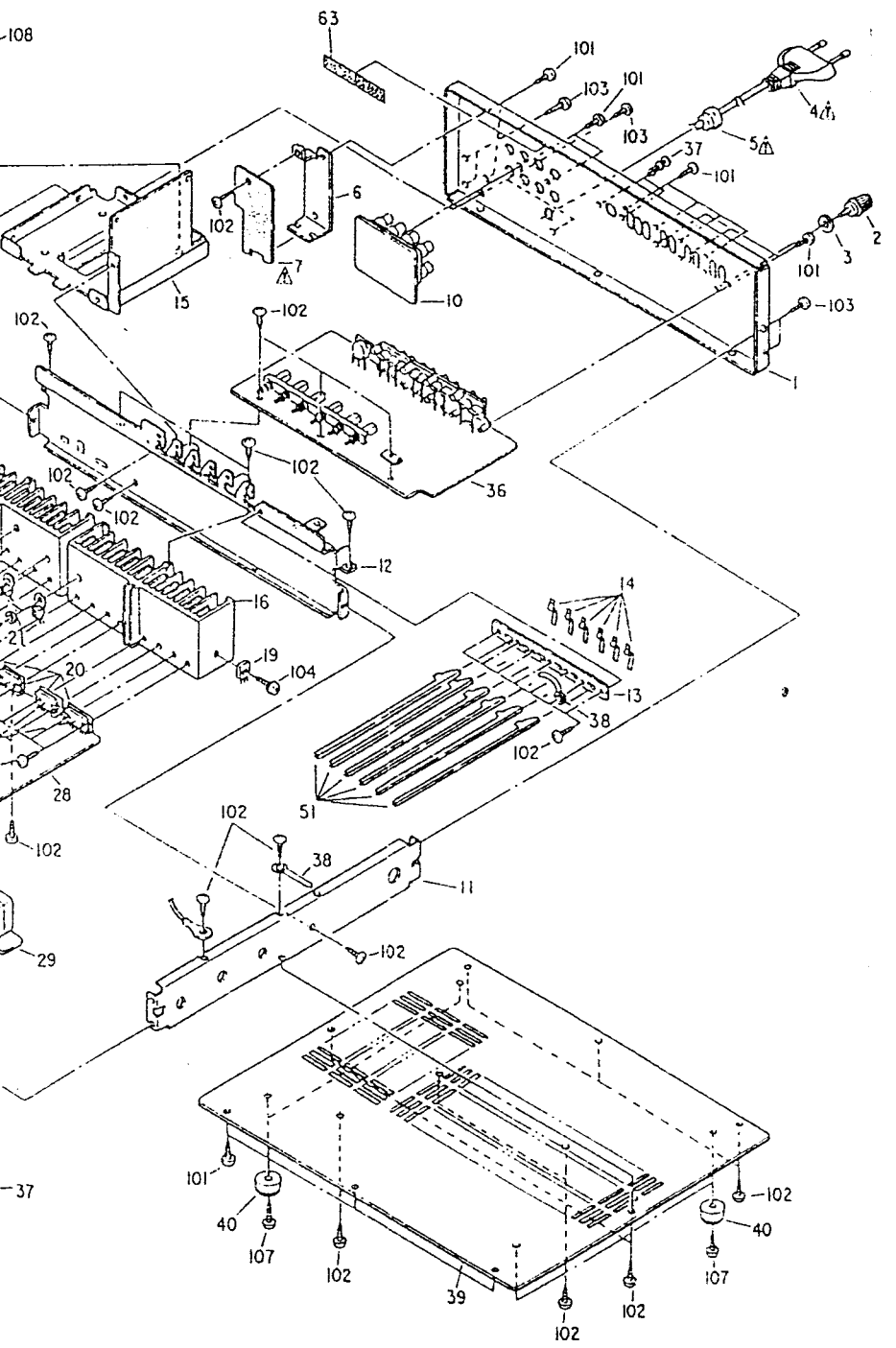


| Ref. No. | Part Name & Descriptions |
|---|---|
| | OPPER |
| | ACER |
| | NOB (A) |
| | NOB (B) |
| | NDENSER BRACKET |
| | UBBER SHEET |
| | UBBER SHEET |
| | ACER |
| | (not included EXPLODED VIEW) |
| | ET COVER |
| | USHION |
| | NST. MANUAL |
| | OLOR LABEL (GOLD) |
| | ONTROL CARD |
| | ARTON CASE |

| Ref. No. | Part No. | Part Name & Descriptions | Q'ty |
|---|---|---|---|
| | | SCREWS & NUT | |
| ∘ *101 | 4730354035 | TAPPING SCREW (2) 3x8 (BLACK) | 22 |
| ∘ 102 | 4730354019 | TAPPING SCREW (2) 3x8 | 33 |
| ∘ 103 | 4770064107 | FIXING SCREW | 6 |
| 104 | 4700011023 | PAN SCREW WITH W. SPW 3x10 | 17 |
| ∘ 105 | 4711303018 | PAN SCREW 3x6 | 13 |
| ∘ 107 | 4730804035 | TAPPING SCREW (2) 3x14 | 4 |
| ∘ 108 | 4700031016 | TAPPING SCREW WITH TWB 4x10 | 4 |
| ∘* 109 | 4734801005 | TAPPING SCREW (TRUS) 4x8 | 4 |
| 110 | | | |
| 111 | | | |
| 112 | | | |

## ADDENDUM LIST

| Ref. No. | Part Name & Descriptions | Part No. | | | | | |
|---|---|---|---|---|---|---|---|
| | | E1 for Asia | | E3 for U.S.A. | | EA for Australia | EK for U.K. |
| | | Gold Version | Black Version | Gold Version | Black Version | Gold Version | Black Version |
| 1 | BACK PANEL | 1059005000 | 1059005000 | 1059002003 | 1059002003 | 1050626307 | 1050626307 |
| [redacted] | | | | | | | |
| 7 | AC FUSE UNIT | – | – | ETC0740-E3 | ETC0740-E3 | ETC0740-F3 | ETC0740-F3 |
| *8 | FTZ LABEL | – | – | – | – | – | – |
| *9 | APPROVAL MARK | – | – | – | – | – | – |
| 10 | SP TERMINAL UNIT | ETC0740-D2 | ETC0740-D2 | ETC0740-E2 | ETC0740-E2 | ETC0740-F2 | ETC0740-F2 |
| [redacted] | | | | | | | |
| 27 | HEADPHONE JACK UNIT | ETC0739-D4 | ETC0739-D4 | ETC0739-E4 | ETC0739-E4 | ETC0739-F4 | ETC0739-F4 |
| 28 | TONE & POWER UNIT | ETC0738-D | ETC0738-D | ETC0738-E | ETC0738-E | ETC0738-F | ETC0738-F |
| 29 | MAIN VR UNIT | ETC0738-D2 | ETC0738-D2 | ETC0738-E2 | ETC0738-E2 | ETC0738-F2 | ETC0738-F2 |
| 34 | P.S & PROT. UNIT | ETC0740-D | ETC0740-D | ETC0740-E | ETC0740-E | ETC0740-F1 | ETC0740-F1 |
| 35 | SPEAKER SW UNIT | ETC0739-D2 | ETC0739-D2 | ETC0739-E2 | ETC0739-E2 | ETC0739-F2 | ETC0739-F2 |
| 36 | INPUT & EQ. UNIT | ETC0739-D1 | ETC0739-D1 | ETC0739-E1 | ETC0739-E1 | ETC0739-F1 | ETC0739-F1 |
| 37 | PUSH RIVET | – | – | – | – | 4770096007 | 4770096007 |
| [redacted] | | | | | | | |
| 43 | PUSH KNOB (A) | 1130515134 | 1130515121 | 1130515134 | 1130515121 | 1130515134 | 1130515121 |
| 44 | PUSH KNOB (B) ASS'Y | 1130450118 | 1130636000 | 1130450118 | 1130636000 | 1130450118 | 1130636000 |
| 45 | FRONT PANEL ASS'Y | 1441257000 | 1441257026 | 1441257000 | 1441257026 | 1441257000 | 1441257026 |
| 48 | ESC. PLATE | 1441256001 | 1441256027 | 1441256001 | 1441256027 | 1441256001 | 1441256027 |
| 49 | LED UNIT | ETC0739-D5 | ETC0739-D5 | ETC0739-E5 | ETC0739-E5 | ETC0739-F5 | ETC0739-F5 |
| 50 | LAMP UNIT | ETC0739-D3 | ETC0739-D3 | ETC0739-E3 | ETC0739-E3 | ETC0739-F3 | ETC0739-F3 |
| 52 | PUSH KNOB (C) | 1130415218 | 1130415221 | 1130415218 | 1130416221 | 1130415218 | 1130415221 |
| 55 | TOP COVER | 1020183100 | 1020183016 | 1029001005 | 1029001018 | 1020183100 | 1020183016 |
| 58 | KNOB (A) | 1120415011 | 1120415024 | 1120415011 | 1120415024 | 1102415011 | 1120415024 |
| 59 | KNOB (B) | 1120416010 | 1120416023 | 1120416010 | 1120416023 | 1120416010 | 1120416023 |
| 64 | CAPACITOR 0.01μF/50V | – | – | – | – | – | – |
| 101 | TAPPING SCREW (2) 3x8 | 4730354035(22) | 4730354035(22) | 4730354035(24) | 4730354035(24) | 4730354035(22) | 4730354035(22) |
| 109 | TAPPING SCREW (TRUS) 4x8 | 4734801005(4) | 4734454038(4) | 4734801005(4) | 4734454038(4) | 4734801005(4) | 4734454038(4) |
| 150 | PAN SCREW WITH S.W 3x8 BLACK | 4700042005(4) | 4700042005(4) | – | – | – | – |
| 151 | NUT M3 | 4756006008(2) | 4756006008(2) | – | – | – | – |
| 152 | WASHER ø5 BLACK | – | – | 4751006016(8) | 4751006016(8) | – | – |
| 153 | TAPPING SCREW (TRUS) 4x20 BLACK | – | – | 4734460035(8) | 4734460035(8) | – | – |
| 154 | TOOTH WASHER ø3 | – | – | – | – | 4753001051(8) | 4753001051(8) |
| 155 | 3T LUG | – | – | – | – | 2050003107(1) | 2050003107(1) |
| 156 | TOOTH WASHER ø4 | – | – | – | – | 4753100004(8) | 4753100004(8) |
| [redacted] | | | | | | | |
| *205 | FUSE LABEL | 5130654062 | 5130654062 | – | – | – | – |
| *206 | FUSE LABEL | 5130654075 | 5130654075 | – | – | – | – |
| [redacted] | | | | | | | |
| *208 | FUSE LABEL | – | – | 5139115007 | 5139115007 | – | – |
| *209 | FUSE LABEL | – | – | 5130607019 | 5130607019 | – | – |
| 210 | RUBBER SHEET | – | – | 4610066139 | 4610066139 | – | – |
| *211 | DANGEROUS MARK | – | – | 5138266009 | 5138266009 | – | – |
| 212 | SERIAL NO. PLATE | – | – | 5130885022 | 5130885022 | – | – |
| 213 | RIVET | – | – | 4770126016 | 4770126016 | – | – |
| 214 | WOOD BOARD (R) | – | – | 1011469008 | 1011469008 | – | – |
| 215 | WOOD BOARD (L) | – | – | 1011470000 | 1011470000 | – | – |
| 216 | FELT SHEET | – | – | 1240032015 | 1240032015 | – | – |
| *217 | INDICATION SHEET | – | – | 5130784000 | 5130784000 | – | – |
| *218 | NOTICE SHEET | – | – | – | – | 5130209006 | – |
| *219 | NOTICE SHEET | – | – | – | – | 5130210008 | – |
| 220 | VOLTAGE LABEL | – | – | – | – | 5130362008 | 5130352008 |
| 221 | BLIND SHEET | – | – | – | – | 5130348006 | 5130348006 |
| 222 | EARTH LABEL | – | – | – | – | 5130140000 | 5130140000 |
| 223 | CAUTION SHEET | – | – | – | – | – | 5130364006 |
| 224 | | | | | | | |
| 225 | | | | | | | |
| a | SET COVER | 5040084007 | 5040084007 | 5058092049 | 5058092049 | 5040084007 | 5040084007 |
| b | CUSHION | 5030456001 | 5030456001 | 5039107005 | 5039107005 | 5030456001 | 5030456001 |
| d | COLOR LABEL (GOLD) | 5139111001 | – | 5139111001 | – | 5139111001 | – |
| e | CONTROL CARD | – | – | – | – | – | – |
| f | CARTON CASE | 5010916037 | 50109160 | 5019104002 | 5019104031 | 5010916066 | 5010916037 |
| g | COLOR LABEL (BLACK) | – | 5139111014 | | 5139111014 | – | 5139111014 |
| h | WARRANTY IN ENVELOPE | 5158053108 | 5158053108 | 5158053[illegible] | 5158053108 | – | – |
| i | PROTECTOR SHEET | – | – | 5040077056 | 5040077056 | – | – |
| j | SAFETY INSTRUCTION | – | – | 5111041005 | 5111041005 | – | – |
| k | FAU[illegible] | – | – | – | – | [illegible] | |
| l | CAUTION PAPER | – | – | – | – | 5130211007 | |
| m | IMPORTANT LABEL | – | – | – | – | – | 513037[illegible] |
| n | | | | | | | |

## BLACK VERSION PARTS LIST
(Same as SILVER VERSION except the followings.)

| Ref. No. | Part No. | Part Name & Descriptions |
|---|---|---|
| 43 | 1130515121 | PUSH KNOB (A) |
| 44 | 1130636000 | PUSH KNOB (B) |
| 45 | 1441257026 | FRONT PANEL ASS'Y |
| 48 | 1441256027 | ESC. PLATE |
| 52 | 1130415221 | PUSH KNOB (C) |
| 55 | 1020183110 | TOP COVER |
| 58 | 1120415024 | KNOB (A) |
| 59 | 1120416023 | KNOB (B) |
| 100 | 4734454038 | TAPPING SCREW (2) 4x8 |
| d. | 5139111014 | COLOR LABEL (BLACK) |

www.manualscenter.com

⚠ ▨ Means important safety item, whi
when necessary, by a part specified or me
by the manufacturer.

## EXPLODED VIEW OF CHASSIS AND CABINET
• PMA-757

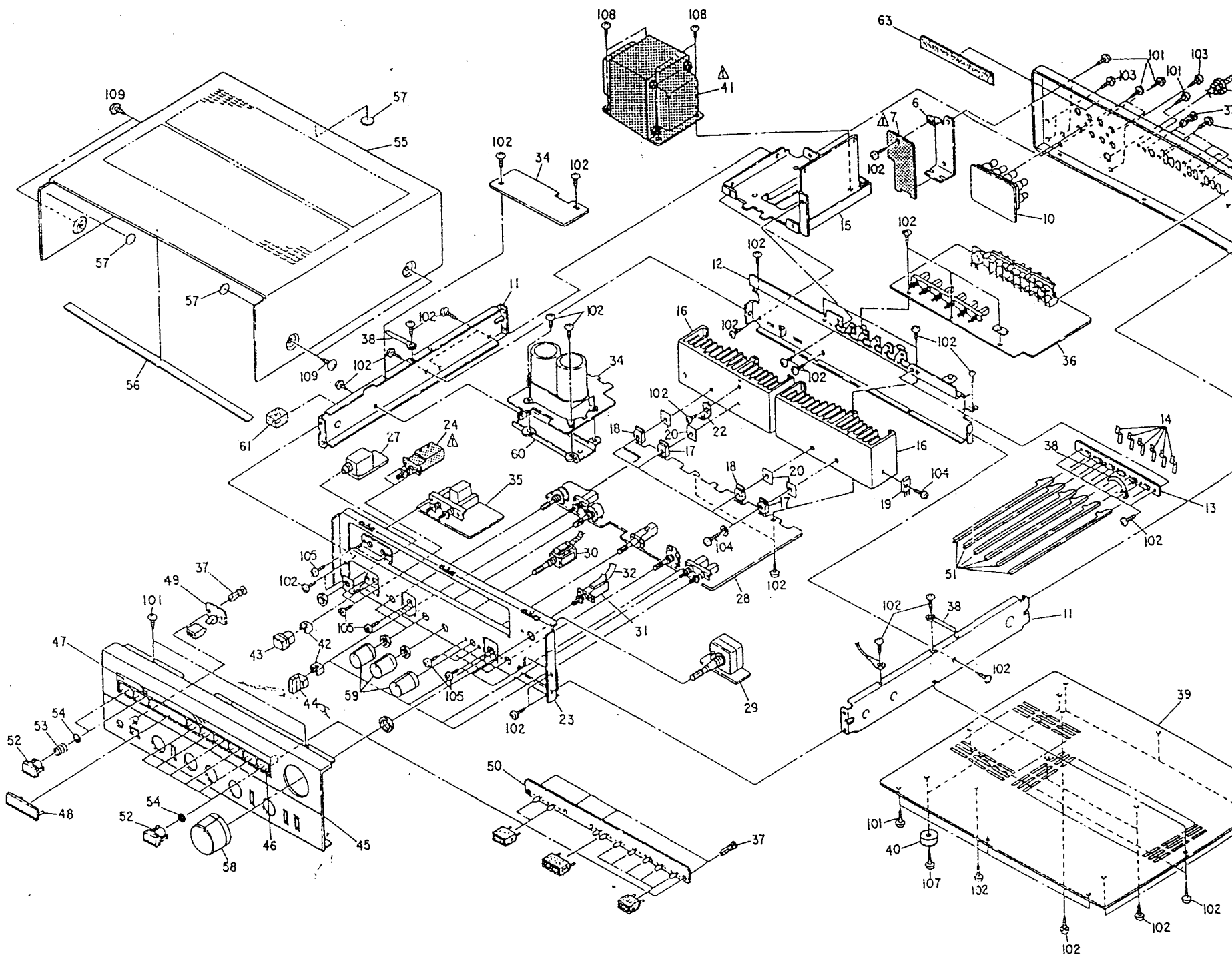


Note: 1. See addendum list below for the parts with asterisk (*) on the Ref. No. and the other parts not included in this list.
2. The list is prepared based on E2 Silver Version.
3. ⊙ Marked not included EXPLODED VIEW.
4. o Marked same as PMA-777E2.

## EXPLODED VIEW OF PARTS LIST

| Ref. No. | Part No. | Part Name & Descriptions |
|---|---|---|
| *1 | 1050626310 | BACK PANEL |
| o 2 | 2050071016 | TERMINAL ASS'Y |
| o 3 | 4770018001 | WASHER (P-87) |
| 4 | [illegible] | AC CORD |
| 5 | [illegible] | CORD BUSH |
| o 6 | 4410455005 | PWB BRACKET |
| 7 | [illegible] | AC CHASSIS UNIT |
| o ⊙ 8 | 5130716023 | FTZ LABEL |
| o ⊙ 9 | 5138253009 | APPROVAL MARK |
| *10 | ETC0740-B2 | SP TERMINAL UNIT |
| o 11 | 4120733606 | SIDE CHASSIS |
| o 12 | 4110375317 | MAIN CHASSIS |
| o 13 | 4410378108 | SHEET |
| o 14 | 4630337000 | SPRING |
| o 15 | 4110334206 | TRANS CHASSIS ASS'Y |
| 16 | 4170156301 | POWER RADIATOR |
| *17 | 2730305002 | TRANSISTOR 2SC3284(O)/(Y) |
| *18 | 2710184007 | TRANSISTOR 2SA1303(O)/(Y) |
| 19 | 2740088018 | TRANSISTOR 2SD1406(Y)/(GR) |
| 20 | 4150234007 | INSULATING SHEET |
| 21 | — | — |
| o 22 | 4410411104 | PCB BRACKET |
| o 23 | 4110429302 | FRONT CHASSIS |
| 24 | [illegible] | PUSH SWITCH (FOR P/SW) |
| 25 | [illegible] | CAPACITOR (4700μF 400VAC) |
| o ⊙ 26 | 4450033005 | WIRE CLAMP BAND USED 36 |
| o *27 | ETC0739-B4 | HEADPHONE JACK UNIT |

| Ref. No. | Part No. | Part Name & Descriptions |
|---|---|---|
| *28 | ETC0738-B1 | TONE & POWER UNIT |
| *29 | ETC0738-B2 | MAIN VR UNIT |
| o 30 | 2120222009 | ROTARY REMOTE |
| o 31 | 2124484005 | 1P-PUSH REMOTE |
| o 32 | 4350052005 | FLEXIBLE SLIDER (MM, MC) |
| 33 | — | — |
| *34 | ETC0740B | P.S & PROT. UNIT |
| *35 | ETC0739-B2 | SPEAKER SW UNIT |
| *36 | ETC0739-B1 | INPUT & EQ. UNIT |
| o 37 | 4770096007 | PUSH RIVET |
| o 38 | EP-6214 | CORD HOLDER USED 6 |
| o 39 | 1050450609 | BOTTOM COVER |
| o 40 | 1040110001 | FOOT |
| 41 | [illegible] | POWER TRANS |
| o 42 | 1140056007 | FLEXIBLE RING |
| o *43 | 1130515134 | PUSH KNOB (A) |
| o *44 | 1130450118 | PUSH KNOB (B) ASS'Y |
| *45 | 1441257013 | FRONT PANEL ASS'Y |
| o 46 | 1430297013 | WINDOW |
| o 47 | 1460556106 | WINDOW PANEL |
| *48 | 1441256014 | ESC. PLATE |
| o *49 | ETC0739-B5 | LED UNIT |
| o *50 | ETC0739-B3 | LAMP UNIT |
| o 51 | 4121069007 | CONNECTING BRACKET |
| o *52 | 1130415218 | PUSH KNOB (C) |
| o 53 | 4630274011 | SPRING |
| o 54 | 1220039012 | SPACER |

| Ref. No. | Part No. | Part Name & Descriptions |
|---|---|---|
| o *55 | 1020183100 | TOP COVER |
| o 56 | 1220069008 | SPACER |
| o 57 | 1040034006 | STOPPER |
| o *58 | 1120415011 | KNOB (A) |
| o *59 | 1120416010 | KNOB (B) |
| o 60 | 4120952102 | CONDENSER BRACKET |
| o 61 | 4610223024 | RUBBER SHEET |
| 62 | — | — |
| o 63 | 1220069066 | SPACER |
| 64 | | |
| 65 | | |
| 66 | | |
| 67 | | |
| 68 | | |
| 69 | | |
| 70 | | |

| PACKING & ACCESSORIES (not included EXPLODED VIEW) | | |
|---|---|---|
| o a. | 5040084007 | SET COVER |
| o b. | 5030456001 | CUSHION |
| o c. | 5111253107 | INST. MANUAL |
| o d. | 5139111001 | COLOR LABEL (GOLD) |
| o e. | 5138295009 | CONTROL CARD |
| f. | 5010916040 | CARTON CASE |

| Ref. No. | Part No. | Part Name & Descriptions | Q'ty |
|---|---|---|---|
| | | SCREWS & NUT | |
| o *101 | 4730354035 | TAPPING SCREW (2) 3x8 (BLACK) | 22 |
| o 102 | 4730354019 | TAPPING SCREW (2) 3x8 | 33 |
| o 103 | 4770064107 | FIXING SCREW | 6 |
| 104 | 4700012022 | PAN SCREW WITH W. SPW 3x12 | 5 |
| o 105 | 4711303018 | PAN SCREW 3x6 | 12 |
| 106 | — | — | |
| o 107 | 4730804035 | TAPPING SCREW (2) 3x14 | 4 |
| o 108 | 4700031016 | TAPPING SCREW WITH TWB 4x10 | 4 |
| o 109 | 4734801005 | TAPPING SCREW (TRUS) 4x8 | 4 |
| 110 | | | |
| 111 | | | |
| 112 | | | |

www.manualscenter.com

⚠ ▨ Means important safety item, which must be replaced, when necessary, by a part specified or meeting the specification by the manufacturer.

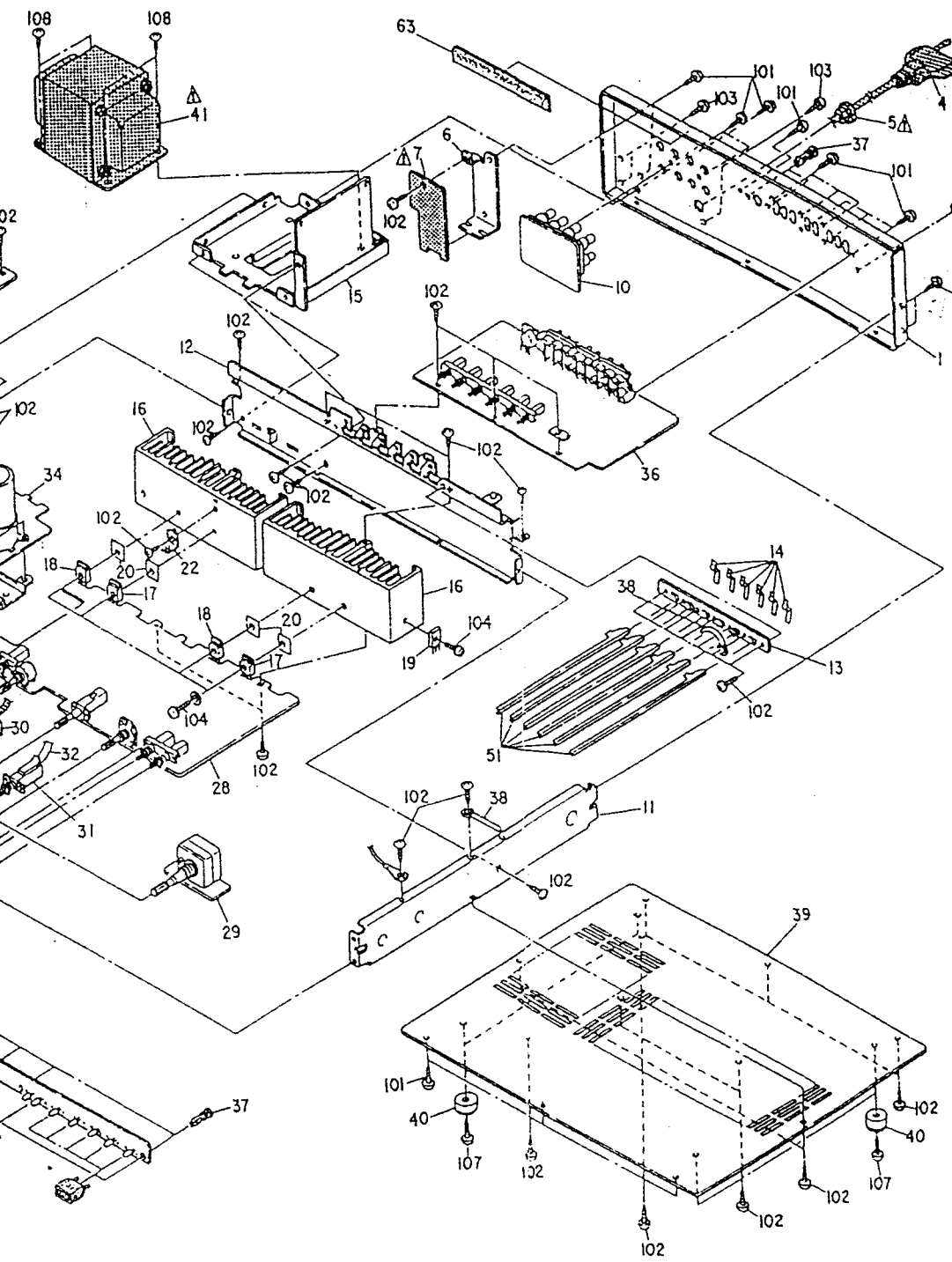


## ADDENDUM LIST

| Ref. No. | Part Name & Descriptions | Part No. E1 for Asia Gold Version | E1 for Asia Black Version | E3 for U.S.A. Gold Version | E3 for U.S.A. Black Version | EC for Canada Black Version | EA for Australia Gold Version |
|---|---|---|---|---|---|---|---|
| 1 | BACK PANEL | 1069004001 | 1069004001 | 1069001004 | 1069001004 | 1069016002 | 1060626310 |
| [illegible] | [illegible] | [illegible] | [illegible] | [illegible] | [illegible] | [illegible] | [illegible] |
| 6 | PWB BRACKET | – | – | 4410455005 | 4410455006 | 4410455005 | 4410455006 |
| [illegible] | [illegible] | [illegible] | [illegible] | [illegible] | [illegible] | [illegible] | [illegible] |
| *8 | FTZ LABEL | – | – | – | – | – | – |
| *9 | APPROVAL MARK | – | – | – | – | – | – |
| 10 | SP TERMINAL UNIT | ETC0740-M2 | ETC0740-M2 | ETC0740-N2 | ETC0740-N2 | ETC0740-N2 | ETC0740-P2 |
| 17 | TRANSISTOR | 2740103003 (2SD1111(R)/(O)) | 2740103003 (2SD1110(R)/(O)) | 2740103003 (2SD1110(R)/(O)) | 2740103003 (2SD1110(R)/(O)) | 2740103003 (2SD1110(R)/(O)) | 2740103003 (2SD1110(R)/(O)) |
| 18 | TRANSISTOR | 2720074000 (2SB849(R)/(O)) | 2720074000 (2SB849(R)/(O)) | 2720074000 (2SB849(R)/(O)) | 2720074000 (2SB849(R)/(O)) | 2720074000 (2SB849(R)/(O)) | 2720074000 (2SB849(R)/(O)) |
| 20 | INSULATIN SHEET | 4150234007 | 4150234007 | 4150234007 | 4150234007 | 4150234007 | 4150234007 |
| [illegible] | [illegible] | [illegible] | [illegible] | [illegible] | [illegible] | [illegible] | [illegible] |
| 27 | HEADPHONE JACK UNIT | ETC0739-M4 | ETC0739-M4 | ETC0739-N4 | ETC0739-N4 | ETC0739-N4 | ETC0739-P4 |
| 28 | TONE & POWER UNIT | ETC0738-M | ETC0738-M | ETC0738-N | ETC0738-N | ETC0738-N | ETC0738-P |
| 29 | MAIN VR UNIT | ETC0738-M2 | ETC0738-M2 | ETC0738-N2 | ETC0738-N2 | ETC0738-N2 | ETC0738-P2 |
| 34 | P.S & PROT. UNIT | ETC0740-M | ETC0740-M | ETC0740-N | ETC0740-N | ETC0740-N | ETC0740-P |
| 35 | SPEAKER SW UNIT | ETC0739-M2 | ETC0739-M2 | ETC0739-N2 | ETC0739-N2 | ETC0739-N2 | ETC0739-P2 |
| 36 | INPUT & EQ. UNIT | ETC0739-M1 | ETC0739-M1 | ETC0739-N1 | ETC0739-N1 | ETC0739-N1 | ETC0739-P1 |
| 37 | PUSH RIVET | – | – | – | – | – | 4770096007 |
| [illegible] | [illegible] | [illegible] | [illegible] | [illegible] | [illegible] | [illegible] | [illegible] |
| 43 | PUSH KNOB (A) | 1130615134 | 1130615121 | 1130615134 | 1130615121 | 1130515121 | 1130515134 |
| 44 | PUSH KNOB (B) ASS'Y | 1130450118 | 1130636000 | 1130450118 | 1130636000 | 1130636000 | 1130450118 |
| 46 | FRONT PANEL ASS'Y | 1441257013 | 1441257039 | 1441257013 | 1441257039 | 1441257039 | 1441257013 |
| 48 | ESC. PLATE | 1441256014 | 1441256030 | 1441256014 | 1441256030 | 1441256030 | 1441256014 |
| 49 | LED UNIT | ETC0739-M5 | ETC0739-M5 | ETC0739-N5 | ETC0739-N5 | ETC0739-N5 | ETC0739-P5 |
| 50 | LAMP UNIT | ETC0739-M3 | ETC0739-M3 | ETC0739-N3 | ETC0739-N3 | ETC0739-N3 | ETC0739-P3 |
| 52 | PUSH KNOB (C) | 1130415218 | 1130415221 | 1130415218 | 1130415221 | 1130415221 | 1130415218 |
| 55 | TOP COVER with Wood Board | 1029001006 | 1020183016 | 1020183100 | 1020183016 | 1020183016 | 1020183100 |
| | without Wood Board | 1020183100 | | | | | |
| 58 | KNOB (A) | 1120415011 | 1120415024 | 1120415011 | 1120415024 | 1120415024 | 1120415011 |
| 59 | KNOB (B) | 1120416010 | 1120416023 | 1120416010 | 1120416023 | 1120416023 | 1120416010 |
| 64 | CAPACITOR (1200pF/500V) | – | – | – | – | – | – |
| 101 | TAPPING SCREW (2) 3×8 | 4730354035(21) | 4730354035(21) | 4730354035(24) | 4730354035(24) | 4730354035(24) | 4730354035(22) |
| 109 | TAPPING SCREW (TRUS) 4×8 | 4734801005(4) | 4734454038(4) | 4734801005(4) | 4734454038(4) | 4734454038(4) | 4734801005(4) |
| 150 | PAN SCREW WITH S.W 3×8 BLACK | 4700042005(2) | 4700042005(2) | | | | |
| 151 | NUT M3 | 4756006008(2) | 4756006008(2) | | | | |
| 152 | WASHER ø5 BLACK | 4751006016(8) | – | | | | |
| 153 | TAPPING SCREW (TRUS) 4×20 BLACK | 4734460035(8) | – | | | | |
| 154 | TOOTH WASHER ø3 | – | – | – | – | – | 4753001051(5) |
| 155 | 3T LUG | – | – | – | – | – | 2050003107(3) |
| 156 | TOOTH WASHER ø4 | – | – | – | – | – | 4753100004(8) |
| [illegible] | [illegible] | [illegible] | [illegible] | [illegible] | [illegible] | [illegible] | [illegible] |
| *205 | FUSE LABEL | 5130664058 | 5130654069 | – | – | – | – |
| *206 | FUSE LABEL (T6.3A) | 5130664091 | 5130654091 | – | – | – | – |
| [illegible] | [illegible] | [illegible] | [illegible] | [illegible] | [illegible] | [illegible] | [illegible] |
| *208 | FUSE LABEL | – | – | 5139115010 | 5139115010 | 5139115010 | – |
| *209 | FUSE LABEL | – | – | 5130607022 | 5130607022 | 5130607022 | – |
| 210 | RUBBER SHEET with Wood Board | 4610066139 | – | – | – | – | – |
| | | – | | | | | |
| *211 | DANGEROUS MARK | – | – | 5138266009 | 5138266009 | – | – |
| 212 | SERIAL NO. PLATE | – | – | 5130885019 | 5130885019 | – | – |
| 213 | RIVET | – | – | 4770126016 | 4770126016 | – | – |
| 214 | WOOD BOARD (R) | 1011469006 | – | – | – | – | – |
| | | – | | | | | |
| 215 | WOOD BOARD (L) } with Wood Board | 1011470000 | – | – | – | – | – |
| | | – | | | | | |
| 216 | FELT SHEET | 1240032015 | – | – | – | – | – |
| | | – | | | | | |
| *217 | INDICATION SHEET | 5130784000 | – | – | – | – | – |
| | | – | | | | | |
| *218 | NOTICE SHEET | – | – | – | – | – | 5130209006 |
| *219 | NOTICE SHEET | – | – | – | – | – | 5130210006 |
| 220 | VOLTAGE LABEL | – | – | – | – | – | 5130362006 |
| 221 | BLIND SHEET | – | – | – | – | – | 5130348006 |
| 222 | EARTH LABEL | – | – | – | – | – | 5130140000 |
| 223 | CAUTION SHEET | – | – | – | – | 5139101008 | – |
| 224 | CAUTION LABEL | – | – | – | – | 5138311006 | – |
| 225 | CSA LABEL | – | – | – | – | | – |
| [illegible] | [illegible] | [illegible] | [illegible] | [illegible] | [illegible] | [illegible] | [illegible] |
| a | SET COVER with Wood Board | 5058092049 | 5040084007 | 5040084007 | 5040084007 | 5040084007 | 5040084007 |
| | without Wood Board | 5040084007 | | | | | |
| b | CUSHION with Wood Board | 5030374206 | 5030456001 | 5030456001 | 5030456001 | 5030456001 | 5030456001 |
| | without Wood Board | 5030456001 | | | | | |
| d | COLOR LABEL (GOLD) | 5139111001 | – | 5139111001 | – | – | 5139111001 |
| e | CONTREL CARD | – | – | – | – | – | – |
| f | CARTON CASE with Wood Board | 5019104015 | 50191040 | 5019104044 | 5019104028 | 5017916040 | [illegible]16053 |
| | without Wood Board | 5010916040 | | | | | |
| [illegible] | [illegible] | [illegible] | [illegible] | [illegible] | [illegible] | [illegible] | [illegible] |
| g | COLOR LABEL (BLACK) | – | 5139111014 | – | 5139111014 | 5139111014 | – |
| h | WARRANTY IN ENVELOPE | 5160063103 | 5160063103 | 5160063103 | 5160063103 | – | – |
| i | PROTECTOR SHEET | 5040077056 | – | – | – | – | – |
| | | – | | | | | |
| j | SAFETY INSTRUCTION | – | – | 5111041005 | 5111041005 | – | – |
| k | PAD | – | – | – | – | – | 5020556018 |
| l | CAUTION PAPER | – | – | – | – | – | 5130211007 |
| m | IMPORTANT LABEL | – | – | – | – | – | – |
| n | PRESET LABEL | 5150290008 | – | – | – | – | – |
| | WARRANTY IN ENVELOPE with Wood Board | – | – | – | – | – | – |

EP1: with Wood Board, E1: without Wood Board

| Part No. | Part Name & Descriptions |
|---|---|
| 020183100 | TOP COVER |
| 220069008 | SPACER |
| 040034006 | STOPPER |
| 120415011 | KNOB (A) |
| 120416010 | KNOB (B) |
| 120952102 | CONDENSER BRACKET |
| 610223024 | RUBBER SHEET |
| – | – |
| 220069066 | SPACER |
| & ACCESSORIES (not included EXPLODED VIEW) | |
| 040084007 | SET COVER |
| 030456001 | CUSHION |
| 111253107 | INST. MANUAL |
| 139111001 | COLOR LABEL (GOLD) |
| 138295009 | CONTROL CARD |
| 010916040 | CARTON CASE |

| Ref. No. | Part No. | Part Name & Descriptions | Q'ty |
|---|---|---|---|
| | | SCREWS & NUT | |
| ∘ *101 | 4730354035 | TAPPING SCREW (2) 3×8 (BLACK) | 22 |
| ∘ 102 | 4730354019 | TAPPING SCREW (2) 3×8 | 33 |
| ∘ 103 | 4770064107 | FIXING SCREW | 6 |
| 104 | 4700012022 | PAN SCREW WITH W. SPW 3×12 | 5 |
| ∘ 105 | 4711303018 | PAN SCREW 3×6 | 12 |
| 106 | – | – | |
| ∘ 107 | 4730804035 | TAPPING SCREW (2) 3×14 | 4 |
| ∘ 108 | 4700031016 | TAPPING SCREW WITH TWB 4×10 | 4 |
| ∘ 109 | 4734801005 | TAPPING SCREW (TRUS) 4×8 | 4 |
| 110 | | | |
| 111 | | | |
| 112 | | | |

## BLACK VERSION PARTS LIST
(Same as SILVER VERSION except the followings.)

| Ref. No. | Part No. | Part Name & Descriptions |
|---|---|---|
| 43 | 1130515121 | PUSH KNOB (A) |
| 44 | 1130636000 | PUSH KNOB (B) |
| 45 | 1441257039 | FRONT PANEL ASS'Y |
| 48 | 1441256030 | ESC. PLATE |
| 52 | 1130415221 | PUSH KONB (C) |
| 55 | 1020183113 | TOP COVER |
| 58 | 1120415024 | KNOB (A) |
| 59 | 1120416023 | KNOB (B) |
| 109 | 4734454038 | TAPPING SCREW (2) 4×8 |
| d. | 5139111014 | COLOR LABEL (BLACK) |

www.manualscenter.com

| Ref. No. | Part No. | Part Name & Descriptions |
|---|---|---|
| | 2412313053 | 1k ohm ±2% 1/4W CARBON (FR) |
| | 2412321003 | 1k ohm ±5% 1/4W CARBON (NB) |
| | 2412313003 | 100 ohm ±2% 1/4W CARBON (FR) |
| | 2440029021 | 100 ohm ±5% 1W METAL OXIDE (NB) |
| | 2412313082 | 47 ohm ±5% 1/4W CARBON (FR) |
| | 2442029003 | 0.22 ohm ±5% 2W METAL OXIDE (NB) |
| | 2412321016 | 22 ohm ±5% 1/4W CARBON (NB) |
| | 2412314007 | 100 ohm ±5% 1/4W CARBON (NB) |
| VR201 | 2110424008 | VARIABLE RESISTOR 100k ohm MAIN |
| VR202 | 2110198004 | VARIABLE RESISTOR 250k ohm BALANCE |
| VR203 | 2110309107 | VARIABLE RESISTOR 50k ohm TREBLE |
| VR204 | 2110309110 | VARIABLE RESISTOR 100k ohm BASS |
| VR301, 302 | 2116025087 | SEMI-IFXED RESISTOR 4.7k ohm IDLE |
| VR303, 304 | 2116025016 | SEMI-IFXED RESISTOR 100 ohm DISTORTION |
| CAPACITORS (not included Ceramic ±5%, ±10%, 50V Type) | | |
| C201, 202 | 2554193005 | 0.1μF ±5% 50V PLASTIC FILM |
| C203, 204 | 2554191007 | 0.082μF ±5% 50V PLASTIC FILM |
| C209, 210 | 2554161008 | 0.0047μF ±5% 50V PLASTIC FILM |
| C213, 214 | 2544146004 | 1μF ±20% 50V ELECTROLYTIC |
| C215, 216 | 2554079048 | 0.01μF ±5% 100V PLASTIC FILM |
| C217, 218 | 2534266004 | 7pF ±0.25pF 500V CERAMIC |
| C219, 220 | 2544181001 | 1μF ±20% 100V ELECTROLYTIC |
| C223, 224 | 2554165004 | 0.0068μF ±5% 50V PLASTIC FILM |
| C225, 226 | 2554187008 | 0.056μF ±5% 50V PLASTIC FILM |
| C229, 230 | 2554147006 | 0.0012μF ±5% 50V PLASTIC FILM |
| C231, 232 | 2554183002 | 0.039μF ±5% 50V PLASTIC FILM |
| C233, 234 | 2551122095 | 0.27μF ±5% 50V PLASTIC FILM |
| C239, 240 | 2543016067 | 10μF ±20% 50V ELECTROLYTIC (B. POLE) |
| C241 243 | 2544181001 | 1μF ±20% 100V ELECTROLYTIC |
| C301 304 | 2544089022 | 100μF ±20% 50V ELECTROLYTIC |
| C311 326 | 2544146004 | 1μF ±20% 50V ELECTROLYTIC |
| C327 330 | 2554149004 | 0.0015μF ±5% 50V PLASTIC FILM |
| C331 334 | 2534482008 | 33pF ±5% 500V CERAMIC |

| Ref. No. | Part No. | Part Name & Descriptions |
|---|---|---|
| C339 ~342 | 2554169000 | 0.01μF ±5% 50V PLASTIC FILM |
| C343 ~346 | 2561030070 | 0.1μF ±5% 100V PLASTIC FILM |
| SWITCHES | | |
| SW201 | 2120221000 | ROTARY SWITCH MODE |
| SW202 | 2124511004 | 2P PUSH SWITCH LOUD, SUB. |
| SW203 | 2124462001 | 1P PUSH SWITCH DIRECT |
| OTHER PARTS | | |
| | 2221090101 | P.W. BOARD |
| | EP-5667H1 | TERMINAL PIN USED 40 |
| | 2090008120 | JUMPER WIRE P=10mm USED 60 |
| | 2036105032 | 4P CONNECTOR CORD |
| | 2030230039 | 1P CONNECTOR |
| | 2050185038 | 3P WIRE HOLDER USED 6 |
| | 2050185041 | 4P WIRE HOLDER |
| | 2050185054 | 5P WIRE HOLDER USED 2 |
| | 4711303018 | 3x6 CPS USED 2 |
| | 4756006008 | 3N USED 2 |