Ref. No. 3499

ONKYO® SERVICE MANUAL

AUDIO VIDEO CONTROL
TUNER AMPLIFIER
MODEL TX-SV525
MODEL TX-SV525R

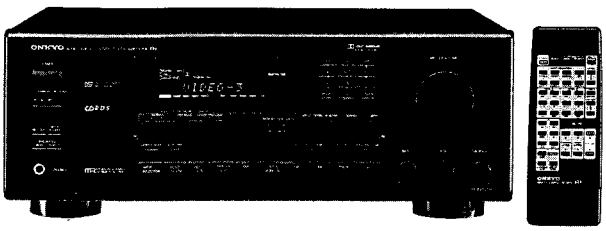

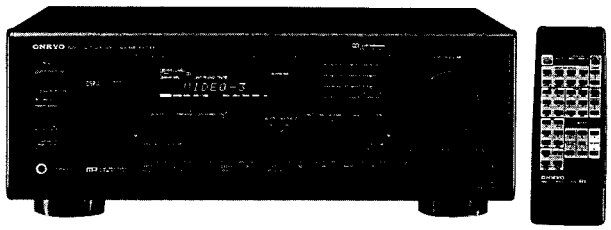

Black and Silver models

BMD, BMDN	120V AC, 60Hz
BMP, SMP	230V AC, 50Hz
BMW	120V or 220V AC, 50/60Hz

SAFETY-RELATED COMPONENT WARNING!!
COMPONENTS IDENTIFIED BY MARK ⚠ ON THE SCHEMATIC DIAGRAM AND IN THE PARTS LIST ARE CRITICAL FOR RISK OF FIRE AND ELECTRIC SHOCK. REPLACE THESE COMPONENTS WITH ONKYO PARTS WHOSE PART NUMBERS APPEAR AS SHOWN IN THIS MANUAL.

MAKE LEAKAGE-CURRENT OR RESISTANCE MEASUREMENTS TO DETERMINE THAT EXPOSED PARTS ARE ACCEPTABLY INSULATED FROM THE SUPPLY CIRCUIT BEFORE RETURNING THE APPLIANCE TO THE CUSTOMER.

ONKYO
AUDIO COMPONENTS

TABLE OF CONTENTS

Specifications 2
Service procedures 3
Exploded view (TX-SV525) 4
Parts list (TX-SV525) 5
Exploded view (TX-SV525R) 6
Parts list (TX-SV525R) 7
Block diagram (Tuner section) 8
120V model 8
Other models 9
Microprocessor connection diagram 10
Microprocessor descriptions 11
IC block diagrams and descriptions 12
Adjustment procedures 21
Pc board-parts list (Amplifier section) 23
Schematic diagram 25
Printed circuit board view 29
Schematic diagram 33
Printed circuit board view 37
Printed circuit board-parts list 39
Schematic diagram 41
Pc board-parts list (Amplifier section) 45
Pc board view (Tuner section) 46
Block diagram (Amplifier section) 47
Packing view 49
Notes 50

www.manualscenter.com

SPECIFICATIONS

AMPLIFIER SECTION

Power Output:

Stero mode

Front L/R channels

80 watts per channel min. RMS. at 8 ohms, both channels driven, from 20 Hz to 20,000 Hz, with no more than 0.08% total harmonic distortion.

Continuous power output:
2 × 100 watts at 8 ohms (DIN)

Surround mode and Multi source mode

Front L/R and center channels
60 W + 60W + 60 W (1 kHz 0.08 % 8 ohms)
Rear channels (Rear only driven)
20 W + 20 W (1 kHz 0.8 % 8 ohms)
Remote channels
60 W + 60 W (1 kHz 0.1 % 8 ohms)

IM Distortion: 0.08% at rated power (FRONT)
Damping Factor: 60 at 8 ohms (FRONT)
Input sensitivities and impedance:
Phono: 2.5 mV/50 kohms
CD/Tape play/Video in: 150 mV/50 kohms
Output level and impedance:
Tape rec/Video out: 150 mV/2.2 kohms
Pre out (SUBWOOFER): 1 V/2.2 kohms
Phono Overload: 120 mV RMS. at 1,000 Hz, 0.5% THD.
Frequency Response: 20 to 30,000 Hz, +/−1 dB
RIAA Deviation: 20 to 20,000 Hz, +/−0.8 dB
Tone Control: BASS: +/−10 dB at 100 Hz
TREBLE: +/−10 dB at 10,000 Hz
Signal to Noise Ratio: PHONO: 80 dB (IHF A, 5 mV input)
CD/TAPE: 100 dB (IHF A)
Muting: − ∞ dB

VIDEO SECTION

Signal sensitivity and impedance: VDP/VCR input, output: 1 Vp-p, 75 ohms

TUNER SECTION

FM:

Tuning Range: 87.5 — 108.0 MHz (50 kHz steps)
Usable Sensitivity: Mono: 11.2 dBf, 1.0 µV (75 ohms)
0.9 µV (26 dB S/N, 40 kHz Div.)
75 ohm DIN
Stereo: 17.2 dBf, 2.0 µV (75 ohms)
23 µV (46 dB S/N, 40 kHz Div.)
75 ohm DIN
50dB Quieting Sensitivity: Mono: 17.2 dBf, 2.0 µV (75 ohms)
Stereo: 37.2 dBf, 20 µV (75 ohms)
Capture Ratio: 1.5 dB
Image Rejection Ratio: USA & Canadian models: 40 dB
Other area models: 85 dB
IF Rejection Ratio: 90 dB
Signal-to-Noise Ratio: Mono: 73 dB
Stereo: 67 dB
Alternate Channel Attenuation: 55 dB, 50 dB (DIN)
AM Suppression Ratio: 50 dB
Total Harmonic Distortion: Mono: 0.15%
Stereo: 0.25%
Frequency Response: 30 — 15,000 Hz +/−1.5 dB
Stereo Separation: 45 dB at 1 kHz/30 dB
at 100 — 10,000 Hz
Muting Level: 17.2 dBf, 2.0 µV (75 ohms)

AM:

Tuning Range: European models
522 — 1611 kHz (9 kHz steps)
USA & Canadian models
530 — 1710 kHz (10 kHz steps)
Worldwide models
531 — 1602 kHz (9 kHz steps)
530 — 1710 kHz (10 kHz steps)
Usable Sensitivity: 30 µV
Image Rejection Ratio: 40 dB
IF Rejection Ratio: 40 dB
Signal-to-Noise Ratio: 40 dB
Total Harmonic Distortion: 0.7%

GENERAL

Power Supply: USA & Canadian models
AC120 V, 60 Hz
European models
AC230 V, 50 Hz
Worldwide models
120 and 220 V switchable, 50/60 Hz
Dimensions (W × H × D): 455 × 170 × 389 mm
17-15/16" × 6-11/16" × 15-5/16"
Mass: 11.8 kg (26.0 lbs)

Specifications and features are subject to change without notice.

SERVICE PROCEDURES

1. Replacing the fuses

This symbol located near the fuse indicates that the fuse used is fast operating type. For continued protection against fire hazard, replace with same type fuse. For fuse rating refer to the marking adjacent to the symbol.

Ce symbole indique que le fusible utlise est a rapide. Pour une protection permanente, n'utiliser que des fusibles de meme type. Ce darnier est indique la qu le present symbol est appose.

CIRCUIT NO.	PART NO.	DESCRIPTION
F901	252166Y	6.3A-UL/T-237, Primary <D/W>
F902	252076	3.15A-TSC, Primary <P/W>
F903	252075	2.5A-SE-EAK, Primary <P>
	NOTE: <D>	:120V model only
	<P>	:230V model only
	<W>	:Worldwide model only

2. To Initialize the unit

This device employs a microprocessor to perform various functions and operations. If interference generated by an external power supply, radio wave, or other electrical source results in accident which causes the specified operations and functions to operate abnormally.

To perform a result, please follow the procedure below.

1. Press and hold down the VIDEO-1 button, then press the POWER button.
2. After "clear" is displayed, the preset memory and each mode stored in the memory, such as surround, are initialized and will return to the factory settings.

3. Safety-check out

(Only U.S.A. model)

After correcting the original service problem, perform the following safety check before releasing the set to the customer. Connect the insulating-resistance tester between the plug of power supply cord and the screw on the back panel.

Specifications: 3.3 Mohm±10% at 500V.

4. Change of voltage

Worldwide models are equipment with a voltage selector to conform with local power supplies. This switch is located on the back panel.

Be sure to set this switch to match the voltage of the power supply in your area before turning the power switch on.

This switch is set to 220V at the factory. Voltage is changed by sliding the groove in the switch with the screwdriver to the right or left. Confirm that the switch has been moved all the way to the right or left before turning the power switch on.

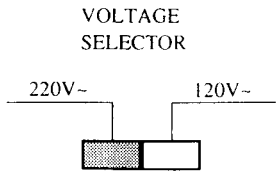

5. Memory preservation

This unit does not require memory preservation batteries.

A built-in memory power back-up system preserves contents of the memory during power failures and even when the unit is unplugged.

The unit must be plugged in and the power switch turned on and off once in order to charge the back-up system. Note that since this is not a permanent memory, the power switch must be turned on and off a few times each month the keep the back-up system operative.

The period of the time during which memory contents are preserved after power has last been turned off varies depending on climate and placement of the unit. On the average, memory contents are protected over a period of 3 to 4 weeks (a minimum of 2 weeks) after the last time power has been turned off. This period is shorted when the unit is exposed to very high humidity or used in an area with an extremely humid climate.

6. Setting the tuning step frequency

Worldwide models are equipped with a step band selector switch. This switch is located on the back panel. This switch is set to 9 kHz at the factory, but may have to be reset to 10 kHz depending on the area where the unit is used.

	AM band step
Europe:	9 kHz
U.S.A.:	10 kHz

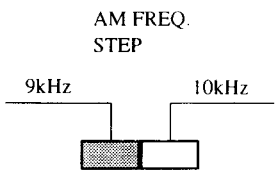

7. Changing the band step

With the exception of the worldwide models, a tuning step selector switch is not provided. When you change the band step, change the parts as shown below.

	To 10 kHz	To 9 kHz
R764	1.8 kohm	3 kohm

www.manualscenter.com

EXPLODED VIEW

TX-SV525

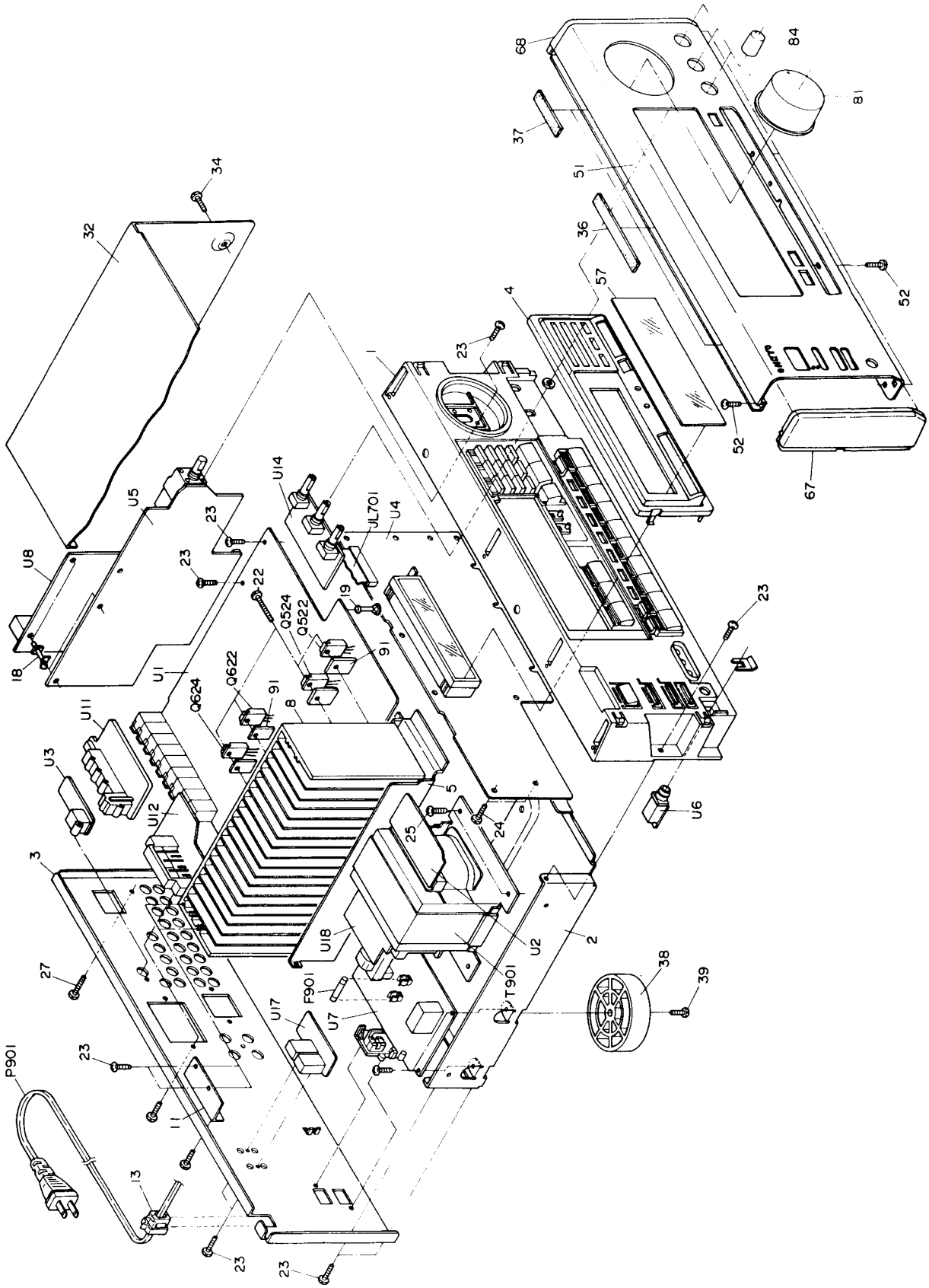

PARTS LIST

REF.NO.	PART NO.	DESCRIPTION
1	27110831AY	Front bracket
2	27100291Y	Chassis
3	27121985Y	Rear panel <D>
	27121987Y	Rear panel <W>
4	27215253AY	Decorative frame
5	27130743AY	Bracket H
6	27262583Y	Plate T
8	27160348Y	Radiator
9	27130742Y	Bracket C
11	27141607AY	Retainer H
13	27300750	⚠ Cord bushing
18	27190062	KGLS-12S, Holder
20	27190926	KGPS-18RF, Holder
22	801433	3SMS8W.SW+14B(BC), Special screw
23	838130088	3TTB+8B, Self-tapping screw
24	833430080	3TTP+8P(BC), Self-tapping screw
25	830440089	4TTC+8B(BC), Self-tapping screw
26	834430108	3TTS+10B(BC), Self-tapping screw
27	834230108	3TTS+10B(Ni), Self-tapping screw
32	28184540Y	Top cover
33	838130088	3TTB+8B, Self-tapping screw
34	838440089	4TTB+8C(BC), Self-tapping screw
36	28140680	0.5×180×8, Cushion
37	28141305Y	0.8×57×8, Cushion
38	27175300Y	Leg
39	838130088	3TTB+8B, Self-tapping screw
51	1A559121Y	Front panel ass'y
52	838130088	3TTB+8B, Self-tapping screw
54	8910301	CS-3, CS ring
57	28191699Y	Clear plate
59	28198813Y	Facet
61	28135199Y	Badge
67	28125268Y	End cap L
68	28125267Y	End cap R
81	28325057	Knob, Volume
84	28325055Y	Knob, Tone
91	223021	Isolation sheet
99	260208	Wire ties
F901	252166Y	⚠ 6.3A-UL/T-237, Primary fuse
F902	252076	⚠ 3.15A-SE-EAK, Primary fuse <W>
JL701	2047402012Y	NCFC7-402012,Flexible flat cable
P901	253192HIT	⚠ AS-UC-6#18, Power supply cord <D>
	253092-1A or	⚠ AS-CEE-2, Power supply cord
	253172	<W>

REF.NO.	PART NO.	DESCRIPTION
Q521	2201653,	2SC3856-O,
Q522	2201654,	2SC3856-Y,
	2201655,	2SC3856-P,
	2202842 or	2SC5242-R or
	2202843	2SC5242-O, Transistors
Q523	2201663,	2SA1492-O,
Q524	2201664,	2SA1492-Y,
	2201665,	2SA1492-P,
	2202832 or	2SA1962-R or
	2202833	2SA1962-O, Transistors
Q621	2202862,	2SD2386-R,
Q622	2202863,	2SD2386-O,
	2202903,	2SD2389-O,
	2202904 or	2SD2389-Y or
	2202906	2SD2389-P, Transistors
Q623	2202852,	2SB1557-R,
Q624	2202853,	2SB1557-O,
	2202893,	2SB1559-O,
	2202894 or	2SB1559-Y or
	2202896	2SB1559-P, Transistors
T901	2301065Y	⚠ NPT-1228D, Power transformer <D>
	2301067Y	⚠ NPT-1228DG, Power transformer <W>
U1	1A559521-1Y	NAAR-5121-1, Main circuit pc board ass'y <D>
	1A559521-1BY	NAAR-5121-1B, Main circuit pc board ass'y <W>
U2	1A559522-1Y	NAETC-5122-1, Secondary circuit pc board ass'y
U3	1A559523-1Y	NAETC-5123-1, Pre. output terminal pc board ass'y
U4	1A559524-1Y	NADG-5124-1, Display circuit pc board ass'y
U5	1A559525-1Y	NAAF-5125-1, Master volume circuit pc board ass'y <D>
	1A562525-1AY	NAAF-5125-1A, Master volume circuit pc board ass'y <W>
U6	1A559526-1Y	NAETC-5126-1, Headphone terminal pc board ass'y
U7	1A559527-1Y	NAPS-5127-1, Primary circuit pc board ass'y <D>
	1A559527-1BY	NAPS-5127-1B, Primary circuit pc board ass'y <W>
U8	1A559528-1Y	NARF-5128-1, Tuner circuit pc board ass'y <D>
	1A559528-1BY	NARF-5128-1B, Tuner circuit pc board ass'y <W>
U11	1A559531-1Y	NAETC-5131-1, Video circuit pc board ass'y
U12	1A559533-1Y	NAETC-5133-1, Speaker terminal pc board ass'y <D>
	1A562533-1AY	NAETC-5133-1A, Speaker terminal pc board ass'y <W>
U14	1A559534-1Y	NAAF-5134-1, Tone control circuit pc board ass'y
U17	1A559537-1Y	NAETC-5137-1, MR/RI terminal pc board ass'y <D>
	1A559537-1BY	NAETC-5137-1B, MR/RI terminal pc board ass'y <W>
U18	1A559538-1Y	NAETC-5138-1, Transformer terminal pc board ass'y

NOTE: <D>:120 V model only
<W>:Worldwide model only

NOTE: THE COMPONENTS IDENTIFIED BY MARK ⚠ ARE CRITICAL FOR RISK OF FIRE AND ELECTRIC SHOCK. REPLACE ONLY WITH PART NUMBER SPECIFIED.

www.manualscenter.com

EXPLODED VIEW

TX-SV525R

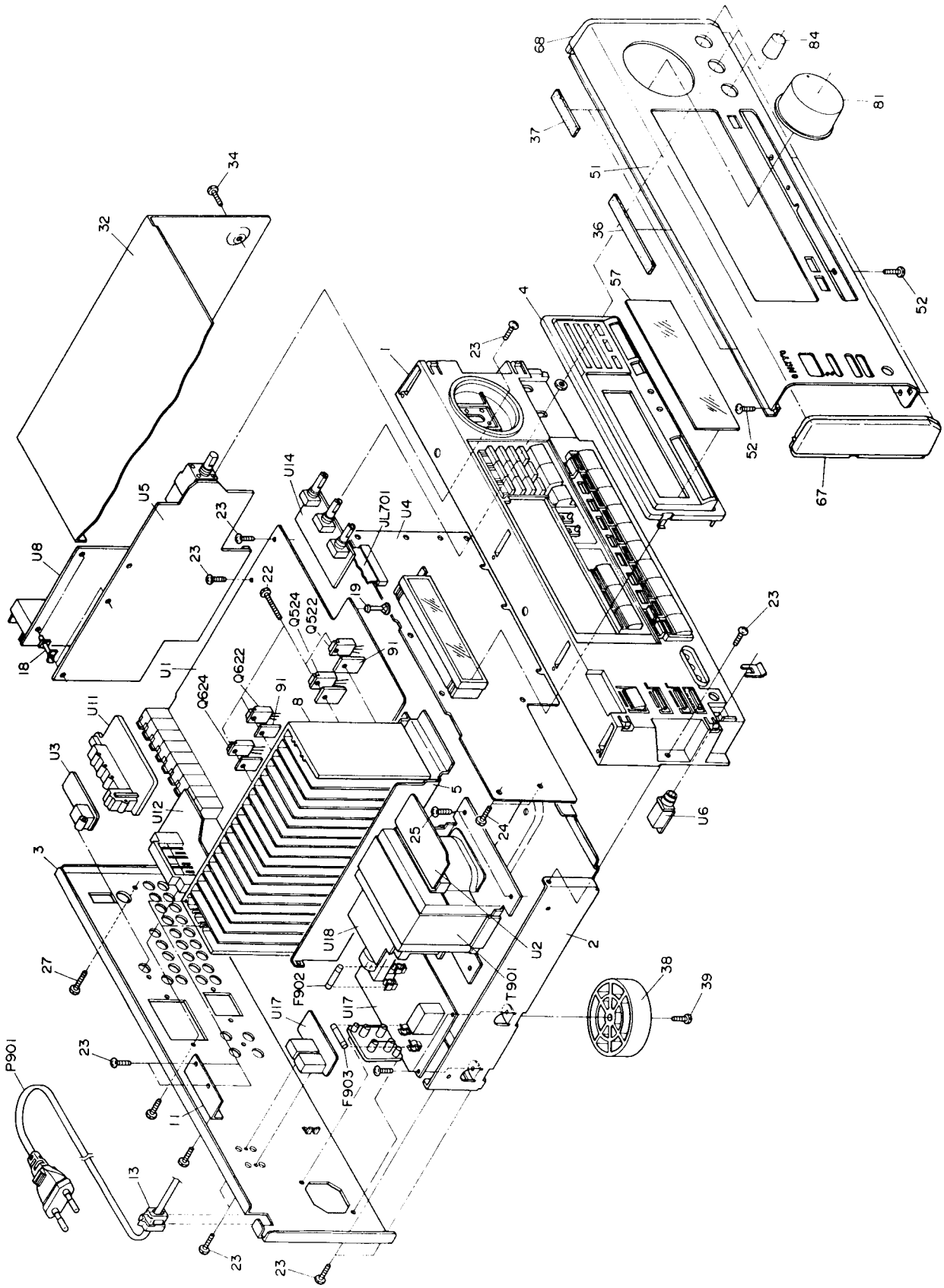

www.manualscenter.com

PARTS LIST

REF.NO.	PART NO.	DESCRIPTION
1	27110831AY	Front bracket <B>
	27110832AY	Front bracket <S>
2	27100291Y	Chassis
3	27121986Y	Rear panel
4	27215256AY	Decorative frame <B>
	27215257AY	Decorative frame <S>
5	27130743AY	Bracket H
6	27262583Y	Plate T <B>
	27262584Y	Plate T <S>
8	27160348Y	Radiator
9	27130742Y	Bracket C
11	27141607AY	Retainer H
13	27300750	⚠ Cord bushing
18	27190062	KGLS-12S, Holder
20	27190926	KGPS-18RF, Holder
22	801433	3SMS8W.SW+14B(BC), Special screw
23	838130088	3TTB+8B, Self-tapping screw
24	833430080	3TTP+8P(BC), Self-tapping screw
25	830440089	4TTC+8B(BC), Self-tapping screw
26	834430108	3TTS+10B(BC), Self-tapping screw
27	834230108	3TTS+10B(Ni), Self-tapping screw
32	28184540Y	Top cover <B>
	28184605Y	Top cover <S>
33	838130088	3TTB+8B, Self-tapping screw
34	838440089	4TTB+8C(BC), Self-tapping screw
36	28140680	0.5×180×8, Cushion
37	28141305Y	0.8×57×8, Cushion
38	27175300Y	Leg
39	838130088	3TTB+8B, Self-tapping screw
51	1A561121Y	Front panel ass'y <B>
	1A562121Y	Front panel ass'y <S>
52	838130088	3TTB+8B, Self-tapping screw
54	8910301	CS-3, CS ring
57	28191699Y	Clear plate
59	28198813Y	Facet
61	28135199Y	Badge
67	28125268Y	End cap L <B>
	28125288Y	End cap L <S>
68	28125267Y	End cap R <B>
	28125287Y	End cap R <S>
81	28325057	Knob, Volume <B>
	28325058	Knob, Volume <S>
84	28325055Y	Knob, Tone <B>
	28325056Y	Knob, Tone <S>

REF.NO.	PART NO.	DESCRIPTION
91	223021	Isolation sheet
92	880009	Plastic rivet
99	260208	Wire ties
F902	252076	⚠ 3.15A-SE-EAK, Primary fuse
F903	252075	⚠ 2.5A-SE-EAK, AC outlet fuse
JL701	2047402012Y	NCFC7-402012,Flexible flat cable
P901	253193HIT	⚠ AS-CEE, Power supply cord
Q521	2201653	2SC3856-O
Q522	2201654	2SC3856-Y
	2201655	2SC3856-P
	2202842 or	2SC5242-R or
	2202843	2SC5242-O, Transistors
Q523	2201663	2SA1492-O
Q524	2201664	2SA1492-Y
	2201665	2SA1492-P
	2202832 or	2SA1962-R or
	2202833	2SA1962-O, Transistors
Q621	2202862	2SD2386-R
Q622	2202863	2SD2386-O
	2202903	2SD2389-O
	2202904 or	2SD2389-Y or
	2202906	2SD2389-P, Transistors
Q623	2202852	2SB1557-R
Q624	2202853	2SB1557-O
	2202893	2SB1559-O
	2202894 or	2SB1559-Y or
	2202896	2SB1559-P, Transistors
T901	2301066Y	⚠ NPT-1228P, Power transformer
U1	1A562521-1AY	NAAR-5121-1A, Main circuit pc board ass'y
U2	1A559522-1Y	NAETC-5122-1, Secondary circuit pc board ass'y
U3	1A559523-1Y	NAETC-5123-1, Pre. output terminal pc board ass'y
U4	1A562524-1AY	NADG-5124-1A, Display circuit pc board ass'y
U5	1A562525-1AY	NAAF-5125-1A, Master volume circuit pc board ass'y
U6	1A559526-1Y	NAETC-5126-1, Headphone terminal pc board ass'y
U7	1A562527-1AY	NAPS-5127-1A, Primary circuit pc board ass'y
U8	1A562528-1AY	NARF-5128-1A, Tuner circuit pc board ass'y
U11	1A559531-1Y	NAETC-5131-1, Video circuit pc board ass'y
U12	1A562533-1AY	NAETC-5133-1A, Speaker terminal pc board ass'y
U14	1A559534-1Y	NAAF-5134-1, Tone control circuit pc board ass'y
U17	1A562537-1AY	NAETC-5137-1A, MR/RI terminal pc board ass'y
U18	1A559538-1Y	NAETC-5138-1, Transformer terminal pc board ass'y

NOTE: <B>:Black model only
<S>:Silver model only

NOTE: THE COMPONENTS IDENTIFIED BY MARK ⚠ ARE CRITICAL FOR RISK OF FIRE AND ELECTRIC SHOCK. REPLACE ONLY WITH PART NUMBER SPECIFIED.

BLOCK DIAGRAM

Tuner section

120V model

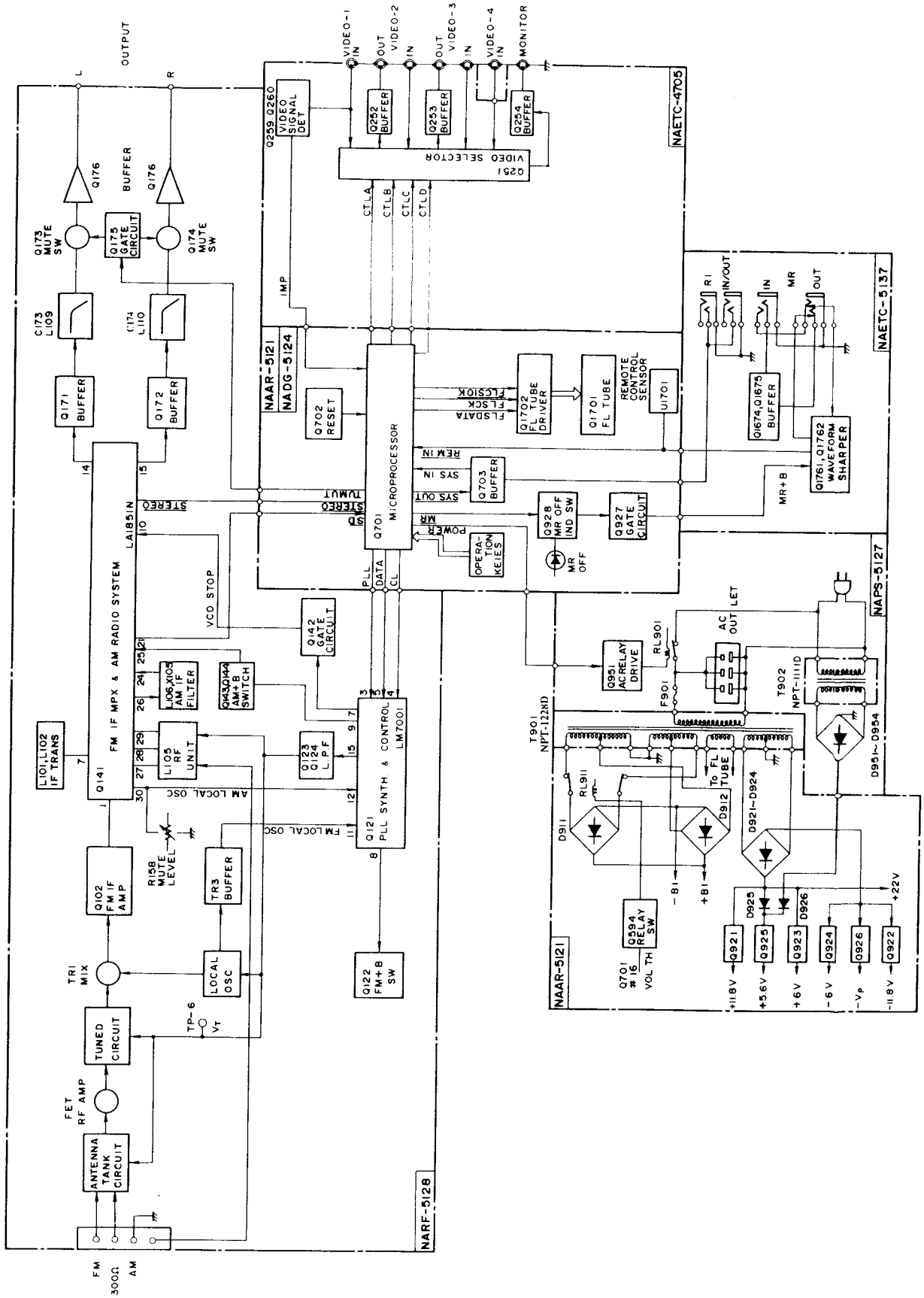

www.manualscenter.com

BLOCK DIAGRAM

Tuner section

Other models

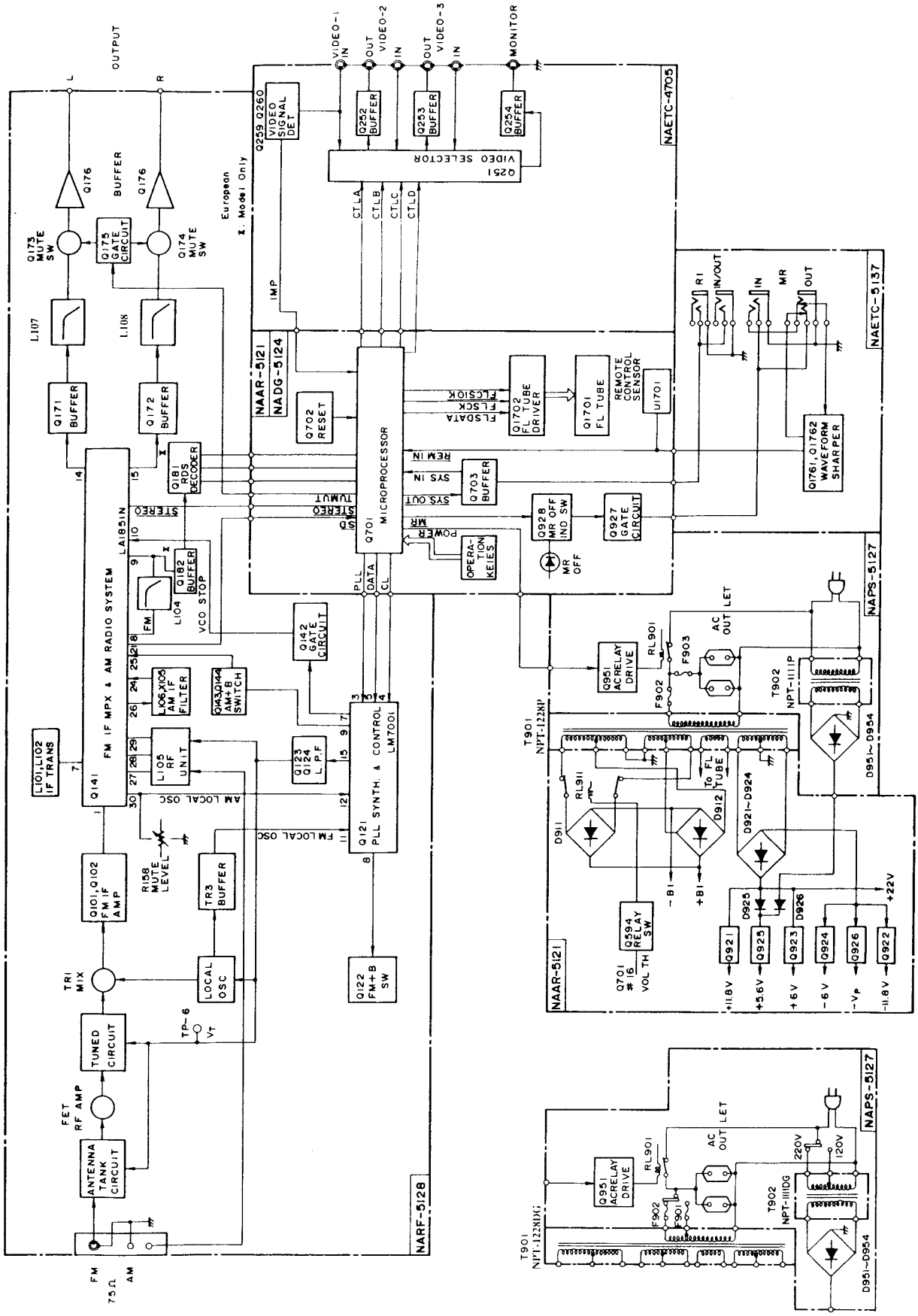

MICROPROCESSOR CONNECTION DIAGRAM

µPD78016CW-021 (MICROPROCESSOR)

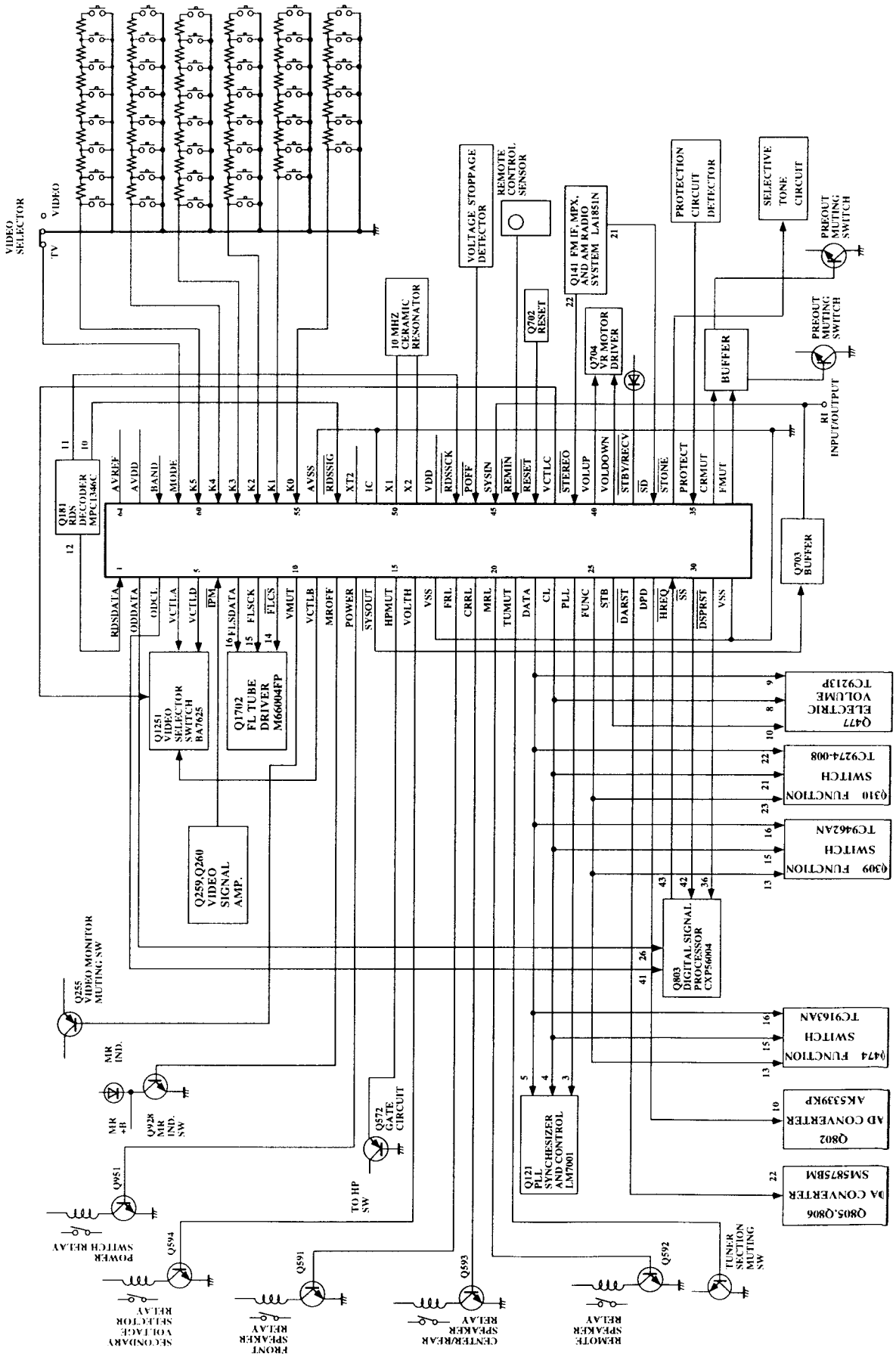

www.manualscenter.com

MICROPROCESSOR TERMINAL DESCRIPTIONS

Pin No.	Function	I/O	Description
1	RDSDATA	I	Data input pin from RDS decoder μPD1346CS
2	ODDATA	O	Connect to the terminal SIN of DSP IC.
3	ODCL	O	Connect to the terminal SCK of DSP IC.
4	VCTLA	O	Video selector switch control output pin
5	VCTLD	O	Video selector switch control output pin
6	$\overline{\text{IPM}}$	I	Detector input pin for intelligent power management
7	FLSDATA	O	Data output pin for FL tube driver M66004FP
8	FLSCK	O	Clock output pin for FL tube driver M66004FP
9	$\overline{\text{FLCS}}$	O	Chip select output pin for FL tube driver M66004FP
10	VMUT	O	Muting control output pin for video signal
11	VCTLB	O	Video selector switch control output pin
12	MROFF	O	Multi room indicator and control output pin
13	POWER	O	Power source control output pin
14	$\overline{\text{SYSOUT}}$	O	System code output pin
15	HPMUT	O	Muting control output pin for headphone signal
16	VOLTH	O	Secondary voltage control output pin
17	VSS		Ground pin
18	FRL	O	Relay control pin for front speaker
19	CRRL	O	Relay control pin for center and rear speakers
20	MRL	O	Relay control pin for multi source
21	TUMUT	O	Muting output pin for tuner section
22	DATA	O	Data output pin. Connect to the terminals DATA of function switch ICs, PLL and electric volume IC.
23	CL	O	Clock output pin. Connect to the terminals CK of function switch ICs, PLL and electric volume IC.
24	PLL	O	Chip enable output pin for PLL IC
25	FUNC	O	Connect to terminal ST of function switches and terminal STB of TC9274N.
26	STB	O	Connect to the terminal STB of electric volume.
27	DARST	O	Reset output pin for DA converter.
28	DPD	O	Control output pin for digital power down.
29	HREQ	I	Connect to the terminal HREQ of DSP IC.
30	SS	O	Connect to the terminal SS of DSP IC.
31	$\overline{\text{DSPRST}}$	O	Reset output pin for DSP IC.
32	VSS		Ground pin
33	FMUT	O	Muting output pin for front amplifier
34	CRMUT	O	Muting output pin for center and rear amplifiers
35	PROTECT	I	Detector input pin of protection circuit. H:On
36	$\overline{\text{STONE}}$	O	Selective tone circuit control output pin. L:On

Pin No.	Function	I/O	Description
37	$\overline{\text{SD}}$	I	Detector input pin of broadcast more than muting level
38	$\overline{\text{STBY}}/\overline{\text{RECV}}$	O	Stand-by and received indicator output pin
39	VOLDOWN	O	Volume control output pin
40	VOLUP	O	Refer table 1.
41	$\overline{\text{STEREO}}$	I	Detector input pin of FM stereo broadcast
42	VCTLC	O	Video selector switch control output pin
43	$\overline{\text{RESET}}$	I	System reset input pin
44	$\overline{\text{REMIN}}$	I	Remote control signal input pin
45	SYSIN	I	System code input pin
46	$\overline{\text{POFF}}$	I	Power stoppage detector input pin
47	$\overline{\text{RDSSCK}}$	I	Clock input pin from RDS decoder IC μPD1346CS
48	VDD		Power supply pin (+5V)
49	X2		Resonator connection terminal for main system clock
50	X1		Connect the ceramic resonator 10MHz.
51	IC		Internal connection pin. Connect to the ground terminal.
52	XT2		Crystal connection pin for sub system clock resonator
53	$\overline{\text{RDSSIG}}$	I	Detector input pin of RDS broadcast. L:RDS broadcast
54	AVSS		Ground pin of A/D converter
55	K0	I	Operation key connection pin
56	K1	I	Operation key connection pin
57	K2	I	Operation key connection pin
58	K3	I	Operation key connection pin
59	K4	I	Operation key connection pin
60	K5	I	Operation key connection pin
61	MODE	I	Initializing input of operation mode
62	BAND	I	Initializing input of band region and RDS function.
63	AVDO		Analogue power supply of A/D converter
64	AVREF		Reference voltage input pin of A/D converter

IC BLOCK DIAGRAMS AND DESCRIPTIONS

TC9162N (INPUT SELECTOR SWITCH)

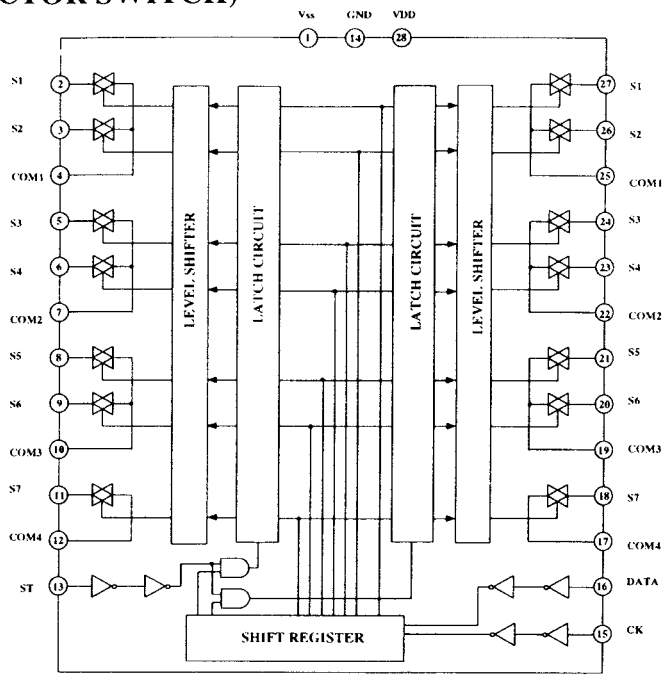

Pin No.	Symbol	Function
1	Vss	Power supply pin (-)
14	GND	Ground pin
28	VDD	Power supply pin (+)
2,3,5,6,8,9,11	S1～S7	Switch input/output pins
27,26,24,23,21,20,18	S1～S7	Switch input/output pins
4,7,10,12	COM1～COM4	Common pins
25,22,19,17	COM1～COM4	Common pins
13	ST	Strobe input pin for data interruption
15	CK	Clock input for data transfer
16	DATA	Serial data input pin for switch setting

TC9274AN-008 (ANALOG SWITCH)

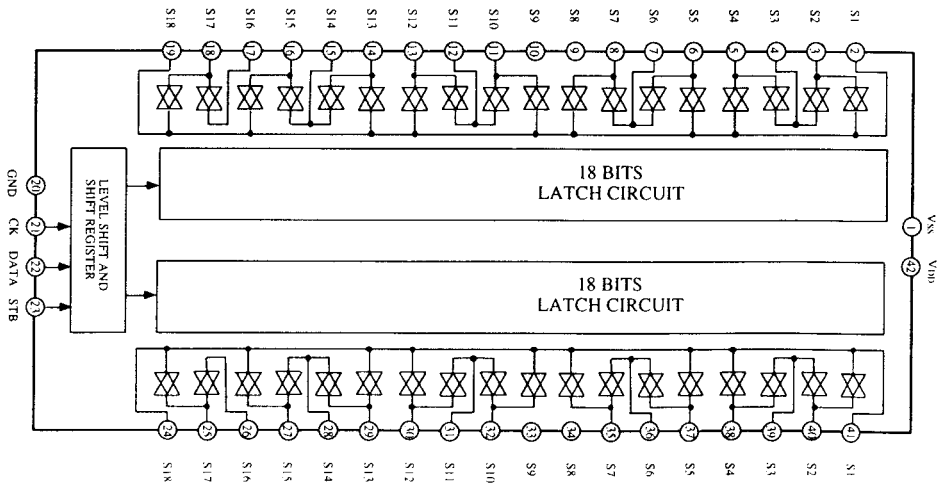

www.manualscenter.com

TC9163AN (ANALOG SWITCH)

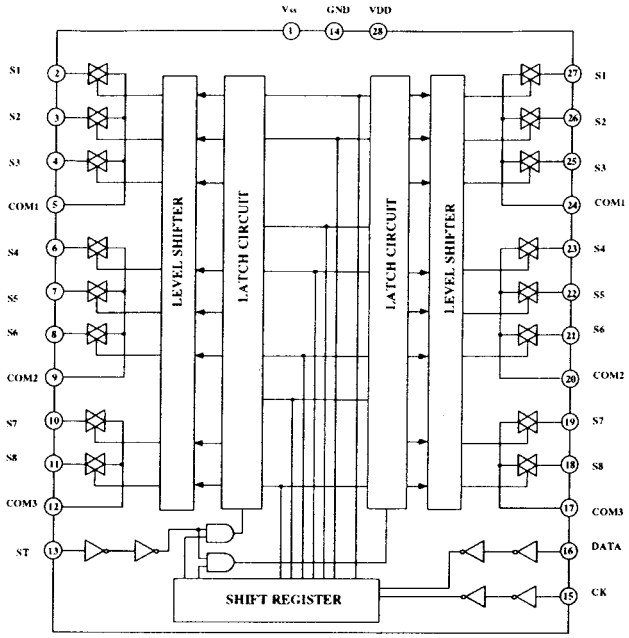

Pin No.	Symbol	Function
1	Vss	Power supply pin (-)
14	GND	Ground pin
28	VDD	Power supply pin (+)
2,3,4,6,7,8,10,11	S1～S8	Switch input/output pins
27,26,25,24,22,21,19,18	S1～S8	Switch input/output pins
5,9,12	COM1～COM3	Common pins
24,20,17	COM1～COM3	Common pins
13	ST	Strobe input pin for data interruption
15	CK	Clock input for data transfer
16	DATA	Serial data input pin for switch setting

M66004FP (FL TUBE DRIVER)

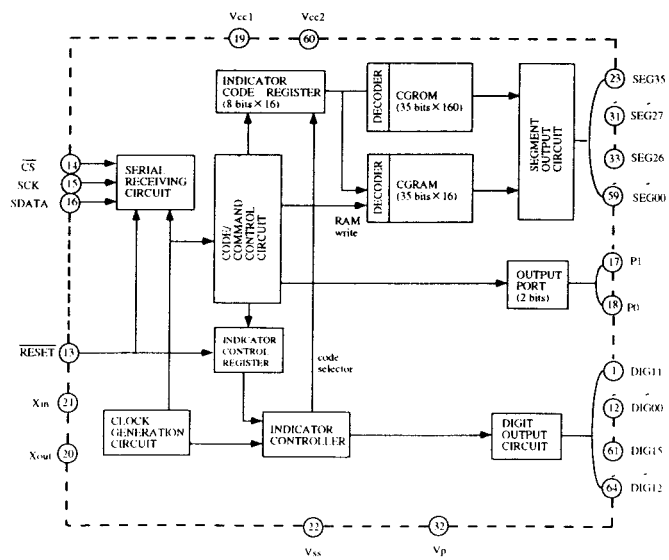

LH2464-10 (DRAM)

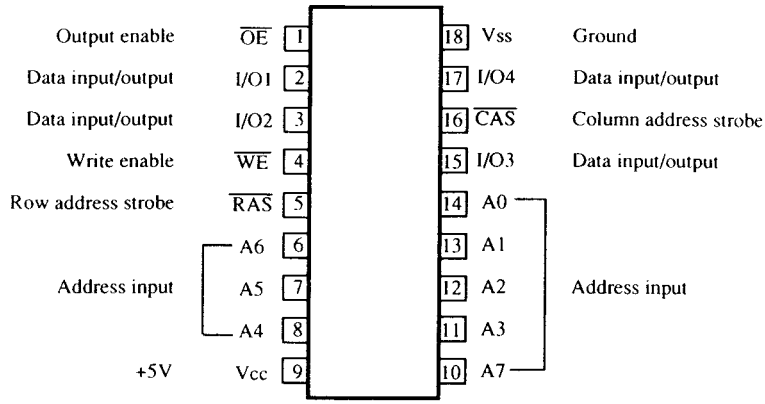

13-BT-138GK (FL TUBE)

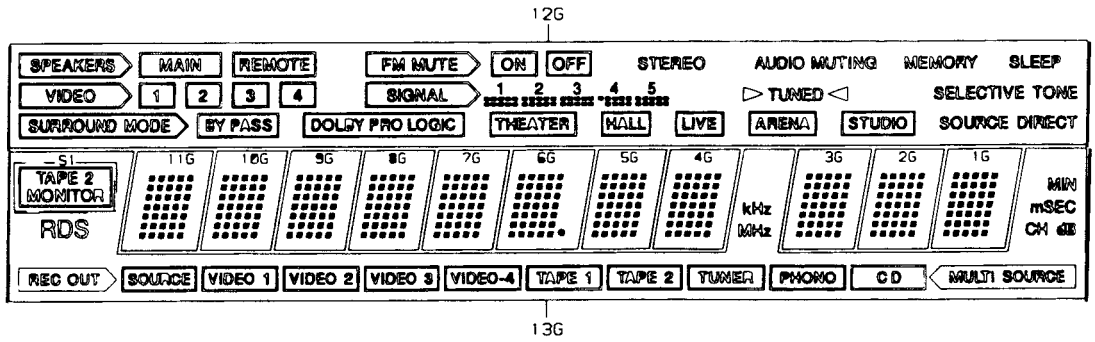

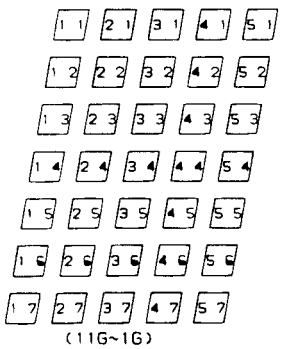

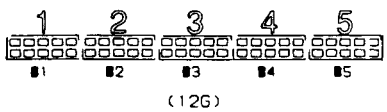

PIN NO.	64	63	62	61	60	59	58	57	56	55	54	53	52	51	50	49
CONNECTION	F2	F2	NP	NP	P36	P35	P34	P33	P32	P31	P30	P29	P28	P27	P26	P25
PIN NO.	48	47	46	45	44	43	42	41	40	39	38	37	36	35	34	33
CONNECTION	P24	P23	P22	P21	P20	P19	P18	P17	P16	P15	P14	P13	P12	P11	P10	P9
PIN NO.	32	31	30	29	28	27	26	25	24	23	22	21	20	19	18	17
CONNECTION	P8	P7	P6	P5	P4	3	P2	P1	NC	NC	NC	NC	NC	NC	NC	13G
PIN NO.	16	15	14	13	12	11	10	9	8	7	6	5	4	3	2	1
CONNECTION	12G	11G	10G	9G	8G	7G	6G	5G	4G	3G	2G	1G	NP	NP	F1	F1

NOTE: F1,F2...Filament
NP.....No pin
NC....No connection
1G ~ 13G....Grid

www.manualscenter.com

XC56004FJ50 (DSP)

Pin No.	Symbol	Description
1	AGND	GND:EMI control output buffer pin
2	$\overline{AMC0}$	This output is Chip selector 0 for SRAM accesses.
3	MA15/$\overline{MCS3}$	Address Line 15/Chip Selector 3
4	MA14	Address output for DRAM access
5	MA13	Address output for DRAM access
6	AVCC	Vcc:EMI address/control output buffer pin
7	MA12	Address output for DRAM access
8	AGND	GND:EMI address output buffer pin
9	QVCC	Vcc:Internal Logic supply pin
10	QGND	GND:Internal Logic supply pin
11	MA11	Address output for DRAM access
12	MA10	Address output for DRAM access
13	MA9	Address output for DRAM access
14	MA8	Address output for DRAM access
15	AGND	GND:EMI address output buffer pin
16	MA7	Address output for DRAM access
17	AVCC	Vcc:EMI address/control output buffer pin
18	MA6	Address output for DRAM access
19	MA5	Address output for DRAM access
20	MA4	Address output for DRAM access
21	AGND	GND:EMI address output buffer pin
22	MA3	Address output for DRAM access
23	MA2	Address output for DRAM access
24	MA1	Address output for DRAM access
25	MA0	Address output for DRAM access
26	SCK/SCL	SPI Serial Clock/I C Serial clock
27	EXTAL	This input should be connected to an external clock source.
28	QVCC	Vcc:Internal Logic supply pin
29	QGND	GND:Internal Logic supply pin
30	PINIT	PLL Initialization pin
31	PGND	GND:PLL supply pin
32	PCAP	Off-chip capacitor connection pin for PLL filter
33	PVCC	Vcc:PLL supply pin
34	SGND	GND:SAI,SHI & ONCE output buffer supply pin
35	MISO/SDA	SPI Master-In-Slave-Out/I C Data and Acknowledge
36	$\overline{RESET}$	This input is a direct hardware reset of the processor.
37	MODA/$\overline{IRQA}$	Mode Select A/External Interrupt Request A/STOP Recovery
38	MODB/$\overline{IRQB}$	Mode Select B/External Interrupt Request B
39	MODC/$\overline{NMI}$	Mode Select C/Non-Maskable Interrupt Request
40	SVCC	Vcc:SAI,SHI & ONCE output buffer supply pin

Pin No.	Symbol	Description
41	MOSI/HA0	SPI Master-Out-Slave-In/I C Slave Address 0
42	$\overline{SS}$/HA2	SPI Slave Selector/I C Slave Address 2
43	$\overline{HREQ}$	Host Request
44	SGND	GND:SAI,SHI & ONCE output buffer supply pin
45	SDO2	Serial Data Output 2
46	SDO1	Serial Data Output 1
47	SDO0	Serial Data Output 0
48	SVCC	Vcc:SAI,SHI & ONCE output buffer supply pin
49	SCKT	Transmit Serial Clock
50	WST	Transmit Word Select
51	SCKR	Receive Serial Clock
52	QGND	GND:Internal Logic supply pin
53	QVCC	Vcc:Internal Logic supply pin
54	SGND	GND:SAI,SHI & ONCE output buffer supply pin
55	WSR	Receive Word Select
56	SDI1	Serial Data Input 1
57	SDI0	Serial Data Input 0
58	DSO	Debug Serial Output
59	DSI/OS0	Debug Serial Input/Chip Status 0
60	DSCK/OS1	Debug Serial Clock/Chip Status 1
61	$\overline{DR}$	Debug Request Input
62	MD7	Data Bus input/output pin
63	MD6	Data Bus input/output pin
64	MD5	Data Bus input/output pin
65	MD4	Data Bus input/output pin
66	DGND	GND:EMI data bus & GPIO output buffer pin
67	MD3	Data Bus input/output pin
68	MD2	Data Bus input/output pin
69	MD1	Data Bus input/output pin
70	DVCC	Vcc:EMI data bus & GPIO output buffer pin
71	MD0	Data Bus input/output pin
72	DGND	GND:EMI data bus & GPIO output buffer pin
73	GPIO3	General Purpose Input/Output 3
74	GPIO2	General Purpose Input/Output 2
75	GPIO1	General Purpose Input/Output 1
76	GPIO0	General Purpose Input/Output 0
77	$\overline{MRD}$	Data Read Strobe
78	$\overline{MWR}$	Data Write Strobe
79	MA17/$\overline{MCS1}$/$\overline{MRAS}$	Address Line 17/Chip selector 1/Row Address Strobe
80	MA16/$\overline{MCS2}$/$\overline{MCAS}$	Address Line 16/Chip selector 2/Column Address Strobe

CS5339-KP/AK5339-VP (AD CONVERTER)

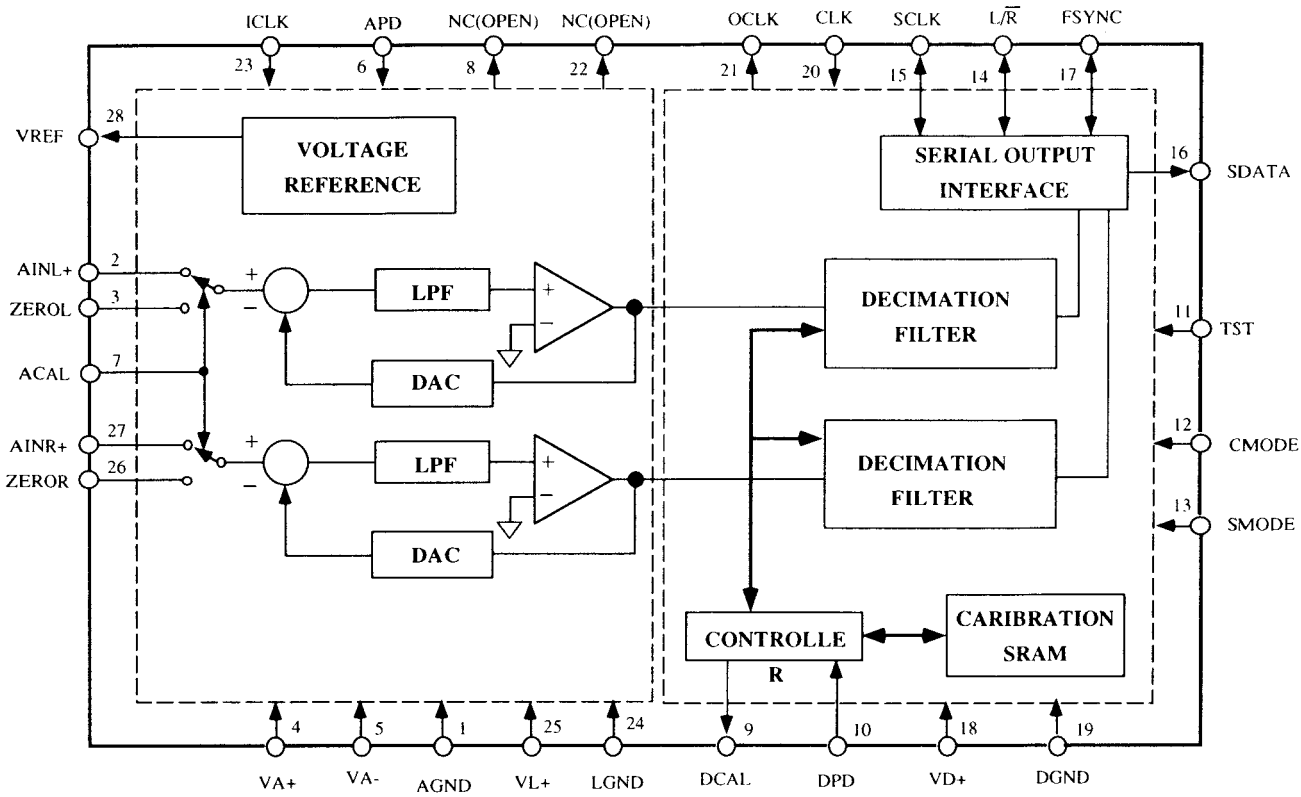

Pin No.	Mark	I/O	Function	Pin No.	Mark	I/O	Function
1	AGND		Analogue ground	14	L/R	I/O	Input channel select
2	AINL	I	Analogue input for the left channel	15	SCLK	I/O	Serial data clock pin
3	ZEROL	I	Zero level input for the left channel	16	SDATA	O	Serial data output pin
4	VA+		Analogue positive power supply (5V)	17	FSYNC	I/O	Frame synchronization clock pin
5	VA-		Analogue negative power supply (-5V)	18	VD+		Power supply pin for the digital section (5V)
6	APD	I	Power down pin for the analog section.	19	DGND		Ground pin for the digital section
			Power down mode when is the low level	20	CLK	I	Master clock input pin
7	ACAL	I	Analogue calibration pin. Connect to terminal DCAL.	21	OCLK	O	128 fs clock output pin
			H:Zero input level L:Analogue input	22	NC		
8	NC			23	ICLK	I	128 fs clock input pin
9	DCAL	O	Digital calibration pin	24	LGND		Logic ground pin for the analogue section
10	DPD	I	Power down pin for the digital section	25	VL+		Logic power supply for the analog section (5 V)
11	TST	I	Test pin	26	ZEROR	I	Zero level input pin for the right channel
12	CMODE	I	Master clock select. L:CLK=256fs H:CLK=384fs	27	AINR	I	Analogue input pin for the right channel
13	SMODE	I	Interface clock select	28	VREF	O	Reference voltage output pin (-3.86V)

www.manualscenter.com

SM5875BM (DA CONVERTER)

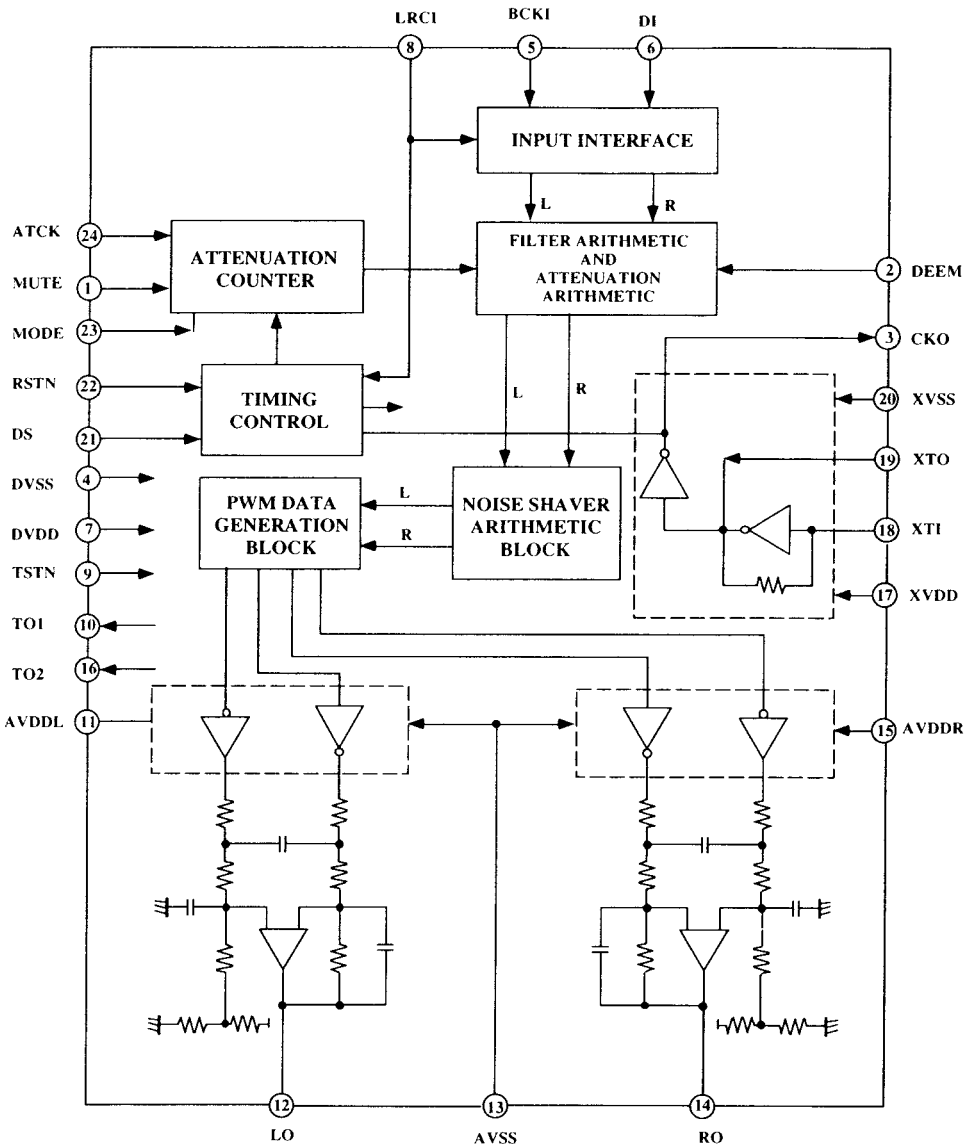

Pin No.	Symbol	I/O	Description
1	MUTE	Ip	MODE=H:Muting control pin
			MODE=L:Attenuator level control pin
2	DEEM	Ip	De-emphasis control pin. On at high level.
3	CKO	O	Clock output pin: 16.9344MHz
4	DVSS	-	Digital supply pin
5	BCKI	Ip	Bit clock input pin
6	DI	Ip	Serial data input pin
7	DVDD	-	Digital supply pin
8	LRCI	Ip	Sampling rate clock input pin
9	TSTN	Ip	Test input pin
10	TO1	O	Test output pin
11	AVDDL	-	Analogue supply pin for left channel
12	LO	O	Analogue signal output pin for left channel

Pin No.	Symbol	I/O	Description
13	AVSS	-	Analogue supply pin
14	RO	O	Analogue signal output pin for right channel
15	AVDDR	-	Analogue supply pin for right channel
16	TO2	O	Test output terminal
17	XVDD	-	Supply pin for resonator system
18	XTI	I	Crystal connection or external clock input pin
19	XTO	O	Crystal connection pin
20	XVSS	-	Supply pin for resonator system
21	DS	Ip	Playback speed select pin. Double speed at H
22	RSTN	Ip	Reset pin
23	MODE	Ip	Muting/Attenuator mode select pin
24	ATCK	Ip	Attenuator level setting clock

BA7625 (VIDEO SELECTOR SWITCH)

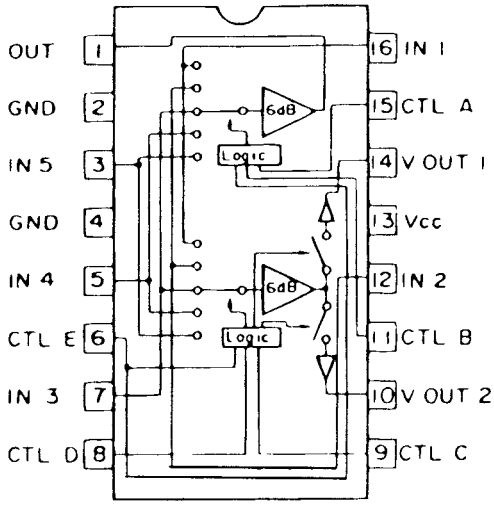

#15	#11	#6	#1
A	B	E	MONITOR OUT
L	L	X	IN1
H	L	X	IN2
L	H	X	IN3
H	H	L	IN4
H	H	H	IN5

X: Don't care

#9	#8	#6	#14
C	D	E	VOUT 1
L	L	X	
H	L	X	IN2
L	H	X	IN3
H	H	L	IN4
H	H	H	IN5

#15	#11	#6	#10
A	B	E	VOUT 2
L	L	X	IN1
H	L	X	
L	H	X	IN3
H	H	L	IN4
H	H	H	IN5

TC9213P (ELECTO VOLUME)

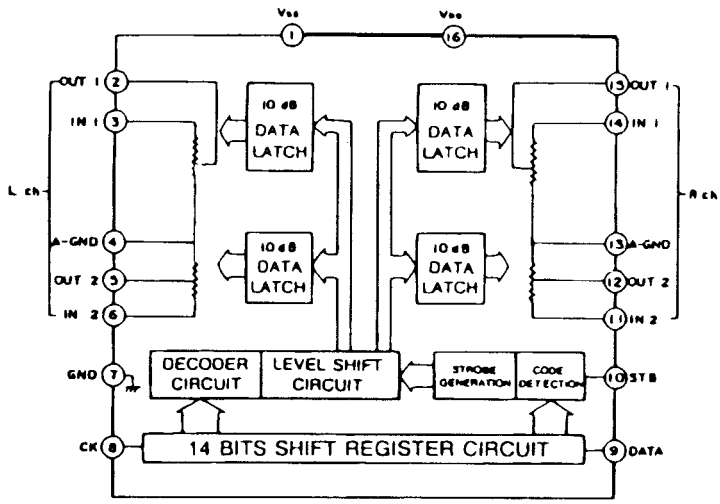

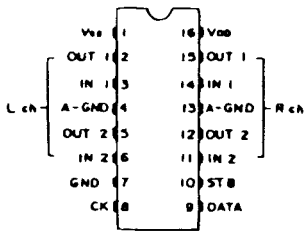

TA7291 (VOLUME MOTOR DRIVER)

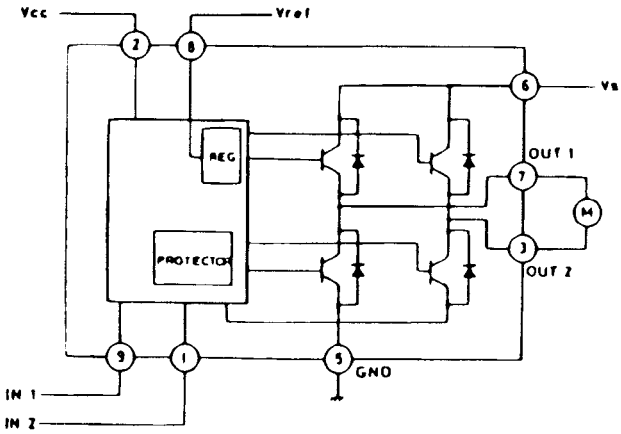

INPUT		OUTPUT		MODE
IN 1	IN 2	OUT 1	OUT 2	
0	0	∞	∞	STOP
1	0	H	L	CW/CCW
0	1	L	H	CCW/CW
1	1	L	L	BRAKE

CCW: Counter clockwise direction
CW: Clockwise direction

www.manualscenter.com

LM7001 (PLL Synthesizer abd Controller)

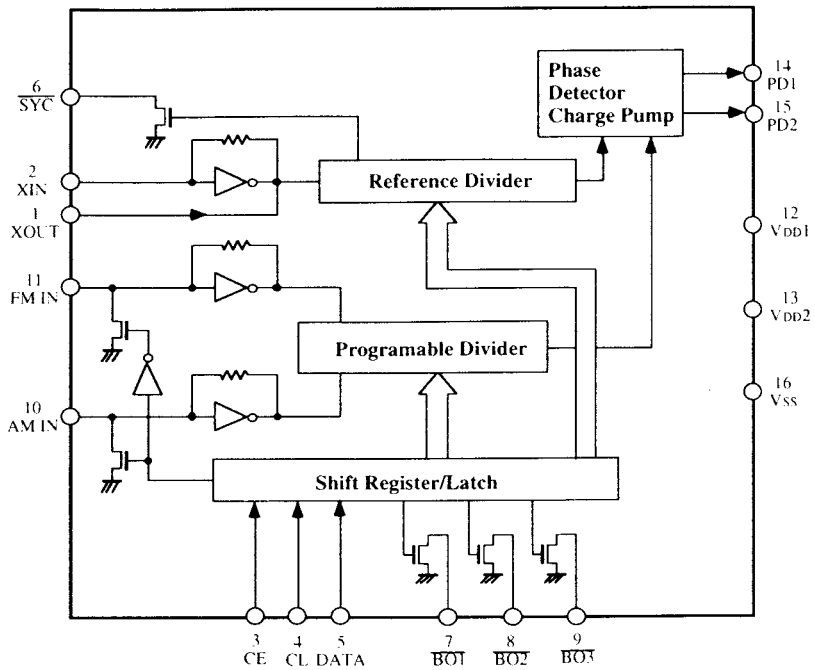

Pin No.	Terminal	Description
1	XOUT	Connect the 7.2MHz crystal resonator.
2	XIN	
3	CE	Chip enable terminal. Connect to the terminal PLLCE1 of microprocessor.
4	CL	Serial clock input terminal. Connect to the terminal PLLCL of microprocessor.
5	DATA	Serial data input terminal. Connect to the terminal PLLDATA of microprocessor.
6	$\overline{\text{SYN}}$	Not used.
7	$\overline{\text{SAT}}$/CANLE	Power source control terminal for DSR. Cable at the high level and Satellite at low.
8	LPF	LPF selector output.
9	ANT	Antenna selector output. A at high level and B at low level.
10	AMIN	AM local oscillator input terminal.
11	FMIN	FM local oscillator input terminal.
12	VDD1	Power source terminal for back-up.
13	VDD2	Power source terminal.
14	PD1	Phase comparator output
15	PD2	Phase comparator output
16	Vss	Ground terminal

μPC1346CS (RDS DECODER)

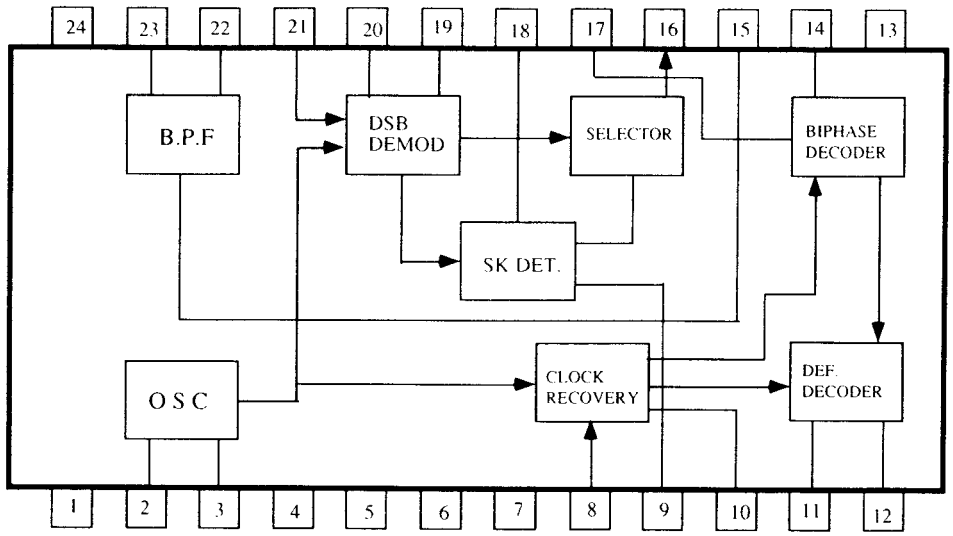

No.	Terminal	Description	No.	Terminal	Description
1	Vcc	Supply voltage for the digital circuit	13	GND	Ground for the analog circuit
2	OSC IN	Resonator input	14	INTEG	Integrating filter terminal
3	OSC OUT	Resonator output	15	BPF ADJ	Adjustment fc of band pass filter
4	GND	Ground for the digital circuit	16	PSK OUT	Biphase signal output
5	TEST1	Test input	17	PSK IN	Biphase decoder input
6	TEST2	Test input	18	LPF SK	Low pass filter for the detection SK
7	OP.CTL	Control input of the operation stop	19	LPF Q	Low pass filter for the crossed detector
8	S/L CTL	Mode control input of the synchonizing detection	20	LPF I	Low pass filter for the synchronizing detector
9	SK OUT	SK detection output	21	DSB IN	DSB demodulator circuit input
10	RDS OUT	RDS synchonizing detection output	22	BPF OUT	Band pass filter output
11	CLOCK OUT	Bit rate clock output	23	BPF IN	Band pass filter input
12	DATA OUT	RDS data output	24	Vcc	Supply voltage for analog circuit

LA1851N (FM IF, MPX AND AM RADIO SYSTEM)

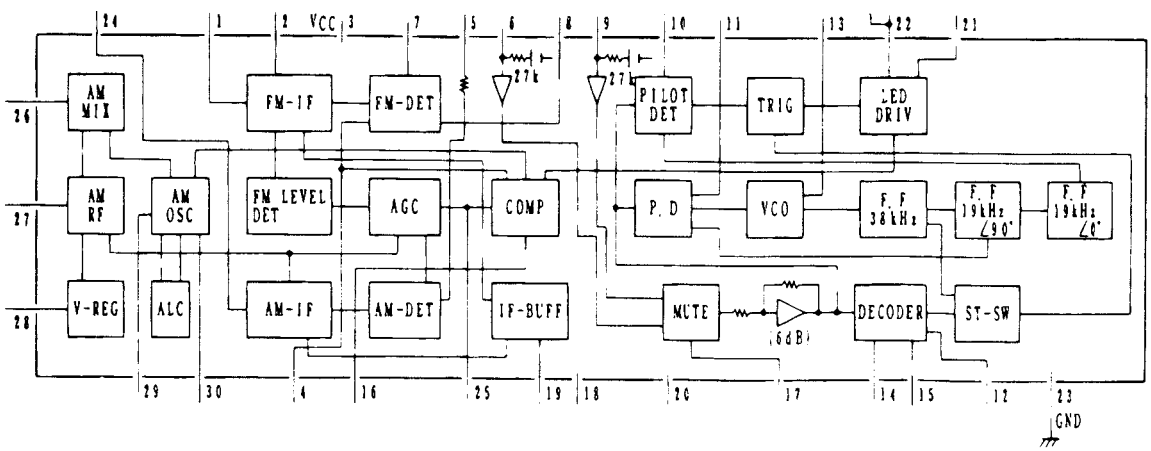

www.manualscenter.com

ADJUSTMENT PROCEDURES

Preparation

1. Input

FM mono: 1kHz, 75kHz devi., 60dB/μ V

FM stereo: 1kHz, 67.5kHz devi., 60dB/μ V

Pilot signal 19kHz 7.5kHz devi.

AM: 400Hz, 30% mod.

2. Outputs

Connect the non-inductive type resistor of 8 ohms to the all speaker terminals unless otherwise noted.

1.FM ADJUSTMENT

Item	Step	Connection of instrument	FM SG output	Stereo modulator output	Tuning frequency	Output indicator	Adjustment point	Adjust for	Remarks
FM IF/RF	1	Fig.1	99.0MHz 1kHz 75kHz devi. 65dBf(60dB)	—	99.0MHz	DC voltmeter	L101	0±20mV	FM MUTE/MODE switch:OFF/MONO Repeat the steps 1 and 3 until no further adjustment is necessary.
	2					AC voltmeter	IFT on the front end	Maximum	
	3					Distortion analyzer	L102	Minimum	
Stereo Distortion		Fig.2	99.0MHz Ext. mod.65dBf(60dB)	Channel L or R 1kHz	99.0MHz	Distortion analyzer	IFT on the front end	Minimum	Don't turn more than ±180°
Stereo Separation	1	Fig.2	99.0MHz Ext. mod. 65dBf(60dB)	Channel L 1kHz	99.0MHz	Channel R AC voltmeter	R150	Minimum	Maximum and same separation
	2			Channel R 1kHz		Channel L AC voltmeter		Minimum	
Muting Level		Fig.2	99.0MHz 19.2dBf(14dB)	—	99.0MHz	Oscilloscope	R158	Signal output	
RDS		Fig.3	99.0MHz Ext. mod.60dB	RDS data or 57kHz 3% devi.	99.0MHz	Oscilloscope	R191	Maximum	TX-SV525R only

2.AM ADJUSTMENT

120V model

Step	AM SG output	Tuning Frequency	Output Indicator	Adjustment point	Adjust for
1		530kHz	Digital DC voltmeter	OSC coil on RF block L151	1.4±0.2V
2	600kHz 400Hz 30% mod. 60dB/m	600kHz	AC voltmeter	RF coil on RF block L151	Maximum
3	990kHz 400Hz 30% mod. 60dB/m	990kHz	AC voltmeter	L152	Maximum

Reference Specification
FM tuned voltage:87.5MHz～108.0MHz
More than 1.3V ～Less than 10V
AM tuned voltage:530kHz～1710kHz
1.4±0.2V～Less than 9.0V

230V and Wolrdwide models

Step	AM SG output	Tuning Frequency	Output Indicator	Adjustment point	Adjust for
1		522kHz or 531kHz	Digital DC voltmeter	OSC coil on RF block L151	1.3±0.1V
2	603kHz 400Hz 30% mod. 60dB/m	603kHz	AC voltmeter	RF coil on RF block L151	Maximum
3	999kHz 400Hz 30% mod. 60dB/m	999kHz	AC voltmeter	L152	Maximum

Reference Specification
FM tuned voltage:87.5MHz～108.0MHz
More than 1.3V ～Less than 10V
AM tuned voltage:522kHz～1611kHz
1.3±0.2V～Less than 9.0V
(230V model)
AM tuned voltage:531kHz～1602kHz
1.3V±0.2～Less than 9.0V
(Worldwide model)

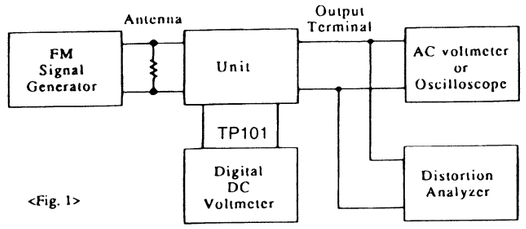

<Fig. 1>

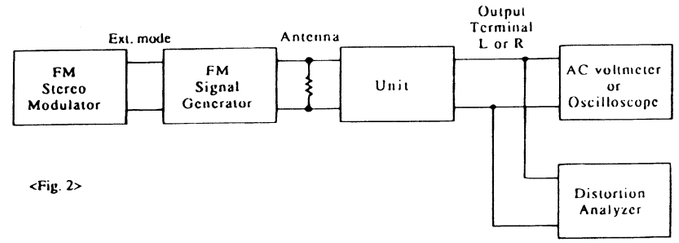

<Fig. 2>

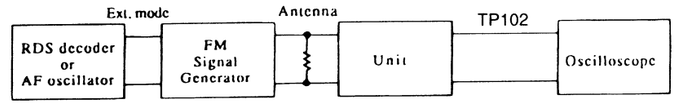

<Fig. 3>

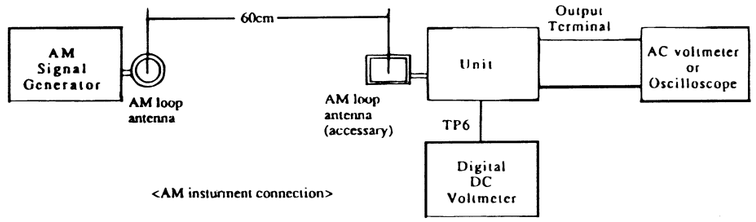

<AM instunment connection>

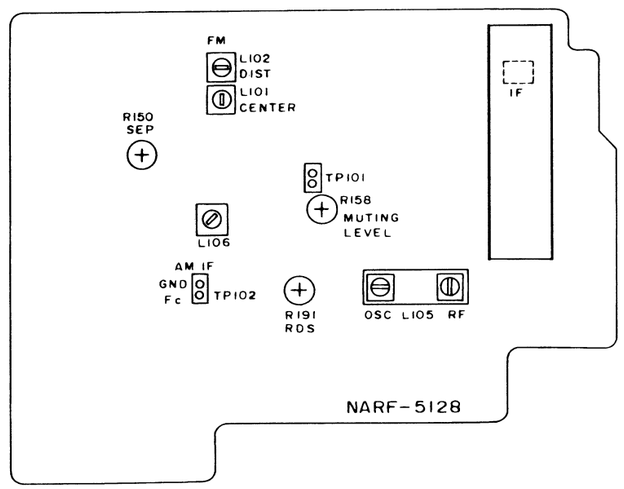

Adjustment point

www.manualscenter.com

PRINTED CIRCUIT BOARD-PARTS LIST

NOTE: <D>:120 V model only
<P>:230 V model only
<W>:Worldwide model only

CAUTION:Replacement of the transistor of mark *, if necessary, must be made from the same beta group (Hfe) as the original type.

NOTE: THE COMPONENTS IDENTIFIED BY MARK ⚠ ARE CRITICAL FOR RISK OF FIRE AND ELECTRIC SHOCK. REPLACE ONLY WITH PART NUMBER SPECIFIED.

MAIN CIRCUIT PC BOARD (NAAR-5121-1/1A/1B)

CIRCUIT NO.	PART NO.	DESCRIPTION
	ICs	
Q301	22240191	NJM4565D-D
Q302-Q307	22240293 or	NJM4558L-D or
	22240247	BA15218N
Q309	22240798	TC9162AN
Q310	22240829	TC9274N-008
Q571	22240752	NJM4556L
Q701	22240907	μ PD78016FCW-034
Q704	22240239	TA7291S
Q921	222780125NEC	78M12HF
Q922	222790125	79M12HF
Q923	222780065JRC	78M06HF
Q924	222790065JRC	79M06HF
Q925	222780565JRC	78M56
	Transistors	
Q515,Q516	2213284 or	2SC1740S-R or
Q591-Q594	2212115	2SC2458-GR
Q517,Q518	2203010	2SC5171
Q519,Q520	2203000	2SA1930
Q521,Q522	2201653,	* 2SC3856-O,
	2201654,	* 2SC3856-Y,
	2201655,	* 2SC3856-P,
	2202842 or	* 2SC5242-R or
	2202843	* 2SC5242-O
Q523,Q524	2201663,	* 2SA1492-O,
	2201664,	* 2SA1492-Y,
	2201665,	* 2SA1492-P,
	2202832 or	* 2SA1962-R or
	2202833	* 2SA1962-O
Q525,Q526	2214984 or	2SC2631-R or
Q625,Q626	2214985	2SC2631-S
Q527,Q528	2214974 or	2SA1123-R or
Q627,Q628	2214975	2SA1123-S
Q572,Q703	2213510 or	DTA114ES or
	2214350	RN2202
Q573-Q576	2213631 or	RN1241-A or
	2213632	RN1241-B
Q615,Q616	2213284 or	2SC1740S-R or
	2212115	2SC2458-GR
Q621,Q622	2202862,	* 2SD2386-R,
	2202863,	* 2SD2386-O,
	2202903,	* 2SD2389-O,
	2202904 or	* 2SD2389-Y or
	2202906	* 2SD2389-P
Q623,Q624	2202852,	* 2SB1557-R,
	2202853,	* 2SB1557-O,
	2202893,	* 2SB1559-O,
	2202894 or	* 2SB1559-Y or
	2202896	* 2SB1559-P
Q671,Q672	2211732 or	2SC1845-F or
	2211733	2SC1845-E
Q673	2211792 or	2SA992-F or
	2211793	2SA992-E
Q702	221282 or	DTC144ES or
	2213560	RN1204
Q926	2211455	2SA1015-GR
Q927	2211255	2SC1815-GR
Q928	2213640 or	DTC123JS or
	2214660	RN1205

CRCUIT NO.	PART NO.	DESCRIPTION
	Diodes	
D503,D504	22380012F	HER303F
D505,D506	223205	1SS270A
D571-D574	223163 or	1SS133 or
D591-D594	223222	WG713A
D603,D604	22380012F	HER303F
D605,D606	223205	1SS270A
D701-D705	223163 or	1SS133 or
D930,D931	223222	WG713A
D706	224450562	MTZ5.6B
D911,D912	22380038	RBV602
D921-D928	22380046 or	AM01Z or
D934	22380035	GP104003E
D929	224453604	MTZ36D
D932	224450623	MTZ6.2C
D933	223205	1SS270A
	223163 or	1SS133 or
	223222	WG713A
	Coils	
L501,L502	231176S	S-1.3C
L601,L602	231176S	S-1.3C
L701	233454K220	NCH-1452 220K
	Resonator	
X701	3010239Y	CST10.0MTW
	Capacitors	
C303,C304	354741009	10 μF,16V,Elect.
C307,C308	354721019	100 μF,6.3V,Elect.
C309,C310	374726224	6200pF5%,50V,Plastic
C311,C312	374721824	1800pF±5%,50V,Plastic
C313,C314	354741009	10μ F,16V,Elect.
C315,C316	354744709	47μ F,16V,Elect.
C523,C524	354741019	100μ F,16V,Elect.
C525,C526	374721044	0.1μ F±5%,50V,Plastic
C531,C532	354764709	47μ F,35V,Elect.
C533,C534	374724734	0.047μ F±5%,50V,Plastic
C537,C538	354741019	100μ F,16V,Elect.
C571-C573	354741009	10μ F,16V,Elect.
C623,C624	354741019	100μ F,16V,Elect.
C633,C634	374724734	0.047μ F±5%,50V,Plastic
C637,C638	354741019	100μ F,16V,Elect.
C671	354722219	220μ F,6.3V,Elect.
C701	3000076 or	EECS5R5T104 or
	3000078	DX-5R5L104,Super
C702,C704	354721019	100μ F,6.3V,Elect.
C703	375524744	0.47μ F±5%,50V,Plastic
C705,C709	354741009	10μ F,16V,Elect.
C710	354721019	100μ F,6.3V,Elect.
C915,C916	3504258	12000μ F,63V,Elect.
C923	354754729	4700μ F,25V,Elect.
C924	354761029	1000μ F,35V,Elect.
C927,C928	354741009	10μ F,16V,Elect.
C931,C932	354741009	10μ F,16V,Elect.
C933	354751029	1000μ F,25V,Elect.
C935	354741009	10μ F,16V,Elect.
C936	354762219	220μ F,35V,Elect.
C937	354782219	220μ F,50V,Elect.
C940	354754719	470μ F,25V,Elect.
C944	354761019	100μ F,35V,Elect.

CIRCUIT NO.	PART NO.	DESCRIPTION
	Resistors	
R541,R542	443521014	100 Ohm±5%, 1/2W, Metal oxide
R543,R544	4000132	RGC55 0.22OHMK,Metal plate
R549-R552	453630474	4.7 Ohm±5%, 1W, Metal
R553,R554	443523924	3.9 kohm±5%, 1/2W, Metal oxide
R559,R560	453530824	8.2 Ohm±5%, 1/2W, Metal
R567,R568	453530104	1 Ohm±5%, 1/2W, Metal
R569,R570	443521014	100 Ohm±5%, 1/2W, Metal oxide
R643,R644	4000132	RGC55 0.22OHMK,Metal plate
R649,R650	453630824	8.2 Ohm±5%, 1W, Metal
R653,R654	443523324	3.3 kohm±5%, 1/2W, Metal oxide
R659,R660	453530824	8.2 Ohm±5%, 1/2W, Metal
R923	453530104	1 Ohm±5%, 1/2W, Metal
R924	453530824	8.2 Ohm±5%, 1/2W, Metal
R925,R926	443621204	12 Ohm±5%, 1W, Metal oxide
R927	453530824	8.2 Ohm±5%, 1/2W, Metal
R928	443621804	18 Ohm±5%, 1W, Metal oxide
R929,R930	443621214	120 Ohm±5%, 1W, Metal oxide
R931	443522204	22 Ohm±5%, 1/2W, Metal oxide
R934	443523314	330 Ohm±5%, 1/2W, Metal oxide
R935	443522204	22 Ohm±5%, 1/2W, Metal oxide
R938	453530104	1 Ohm±5%, 1/2W, Metal
	Relaies	
RL501-RL503	25065485	NRL-2P2A-DC24-086
RL911	25065339	NRL-2P5A-DC24-046
	Plugs	
P201a	25055652	NPLG-14P608 <D/W>
	25055653	NPLG-16P609 <P>
P535,P536	25055038	NPLG-2P29
P601a	25055651	NPLG-12P607
P602a	25055654	NPLG-18P610
P603a	25055652	⚠ NPLG-14P608
P635,P636	25055038	NPLG-2P29
	Terminals	
P301-P303	25045300	NPJ-6PDBL159
P304	25045303	NPJ-4PDBL162
P501	25060211	NTM-4PDMN133,Speaker
P502	25060212Y or	NTM-4PDML134 or
	25060230Y	NTM-4PDML152
	Wire clamper	
P921	260224	CP-1S
	Wire holders	
JL251a	25051096	NSCT-12P883
JL501a	25051108	NSCT-4P895
JL502a	25051088	NSCT-4P875
JL702a	25051091	NSCT-7P878
JL911a	25051113	NSCT-9P900
JL921a	25051109	NSCT-5P896
	Wire traps	
JL401b	25055630	NPLG-9P592
JL701a	25050980	NSCT-40P767
	Radiators	
Q921a	27160209	RAD-67
Q923a	27160211	RAD-68

SECONDARY CIRCUIT PC BOARD (NAETC-5122-1)

CIRCUIT NO.	PART NO.	DESCRIPTION
	Resistors	
R921,R922	453534794	0.47 Ohm±5%,1/2W, Metal
R941	453534794	0.47 Ohm±5%,1/2W, Metal

CIRCUIT NO.	PART NO.	DESCRIPTION
	Wire holders	
JL911b	25051113	NSCT-9P900
JL921b	25051109	NSCT-5P896

DISPLAY CIRCUIT PC BOARD (NADIS-5124-1/1A)

CIRCUIT NO.	PART NO.	DESCRIPTION
	Remote sensor	
U1701	24130010	HC-312
	FL tube	
Q1701	212138	13-BT-138GK
	ICs	
Q1702	22240685R9	M66004FP
Q801	22240293 or	NJM4558L-D or
Q808,Q809	22240247	BA15218N
Q802	22240524	AK5339-VP or
		CS5339-KP
	AK5339-VP and CS5339-KP are same IC.	
Q803	22240831R3	XC56004FJ50
Q804	22240720	LH2464-10
Q805,Q806	22240832R9	SM5875BM
	Transistors	
Q1703	221282 or	DTC144ES or
	2213560	RN1204
Q1704,Q1705	2213284 or	2SC1740S-R or
	2212115	2SC2458-GR
	LEDs	
D1701,D1702	225291D	SEL4910D-D
	Diodes	
D1703,D1711	223205	1SS270A
D1713,D1714	223163 or	1SS133 or
D803-D806	223222	WG713A
D1712	224451303	MTZ 13C
D802	22380046 or	AM01Z or
	22380035	GP104003E
	Core	
L801	230906	BL02RN2-R62
	Coils	
L811	233454K220	NCH-1452 220K
L818-L820	233454K220	NCH-1452 220K
	Resonator	
X801	3010112	KD6586FFB
	Capacitors	
C1702,C1711	353741009	10μ F,16V,Elect.
C1714	375524744	0.47μ F±5%,50V,Plastic
C1716	353781009	10μ F,50V,Elect.
C1717	353721019	100μ F,6.3V,Elect.
C1718,C1719	375524744	0.47μ F±5%,50V,Plastic
C803,C804	353741009	10μ F,16V,Elect.
C805,C806	374721034	0.01μ F±5%,50V,Plastic
C807-C810	353721019	100μ F,6.3V,Elect.
C815,C818	353721019	100μ F,6.3V,Elect.
C816	353741009	10μ F,16V,Elect.
C824,C829	353721019	100μ F,6.3V,Elect.
C825	374724744	0.47μ F±5%,50V,Plastic
C841,C850	353721019	100μ F,6.3V,Elect.
C853	353721019	100μ F,6.3V,Elect.
C861-C864	353780109	1μ F,50V,Elect.
C867-C870	374723924	3900pF±5%,50V,Plastic
C873-C876	374722224	2200pF±5%,50V,Plastic
C879-C882	374721524	1500pF±5%,50V,Plastic

SCHEMATIC DIAGRAM

Part 1

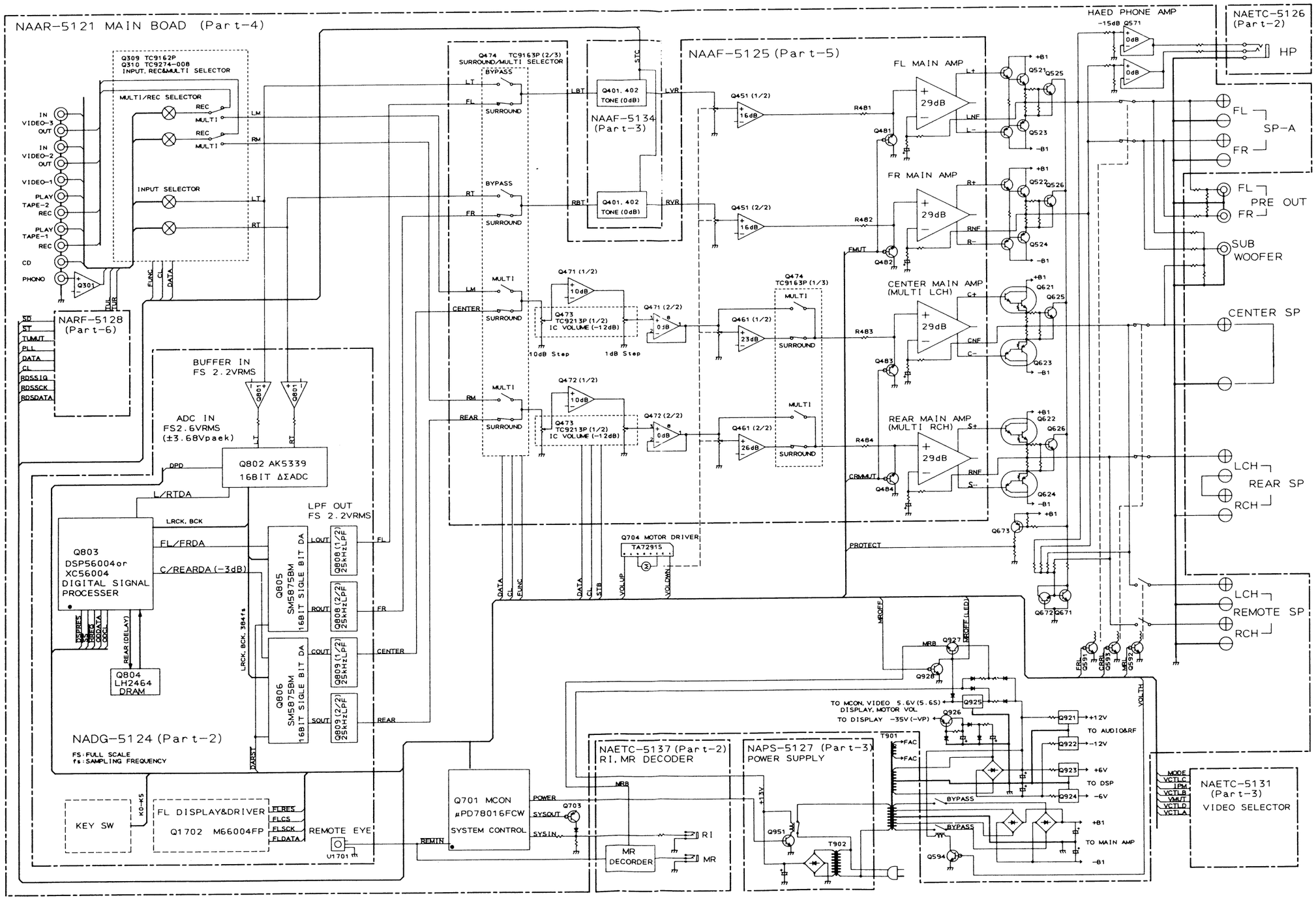

www.manualscenter.com

SCHEMATIC DIAGRAM

Part 2

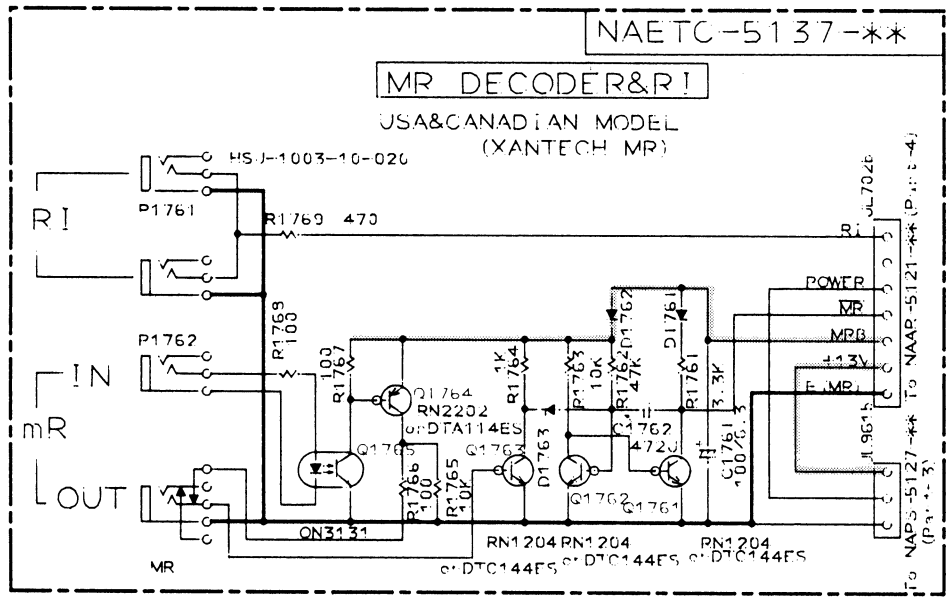

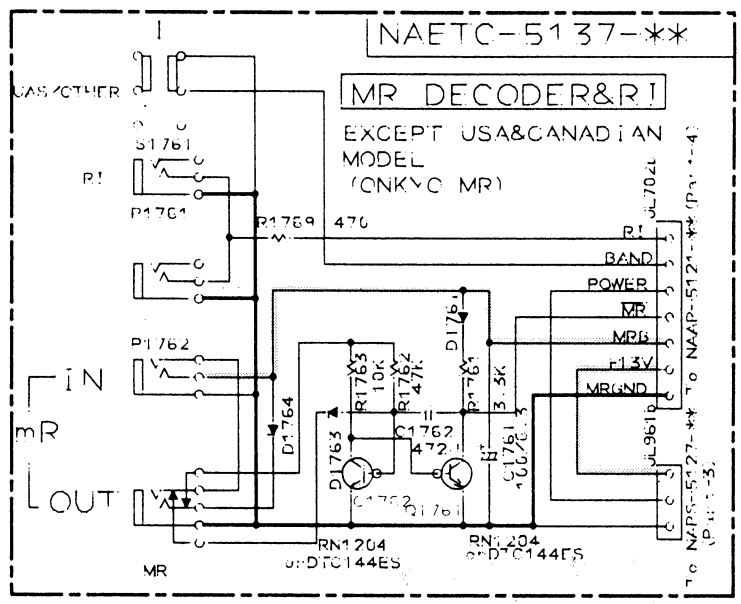

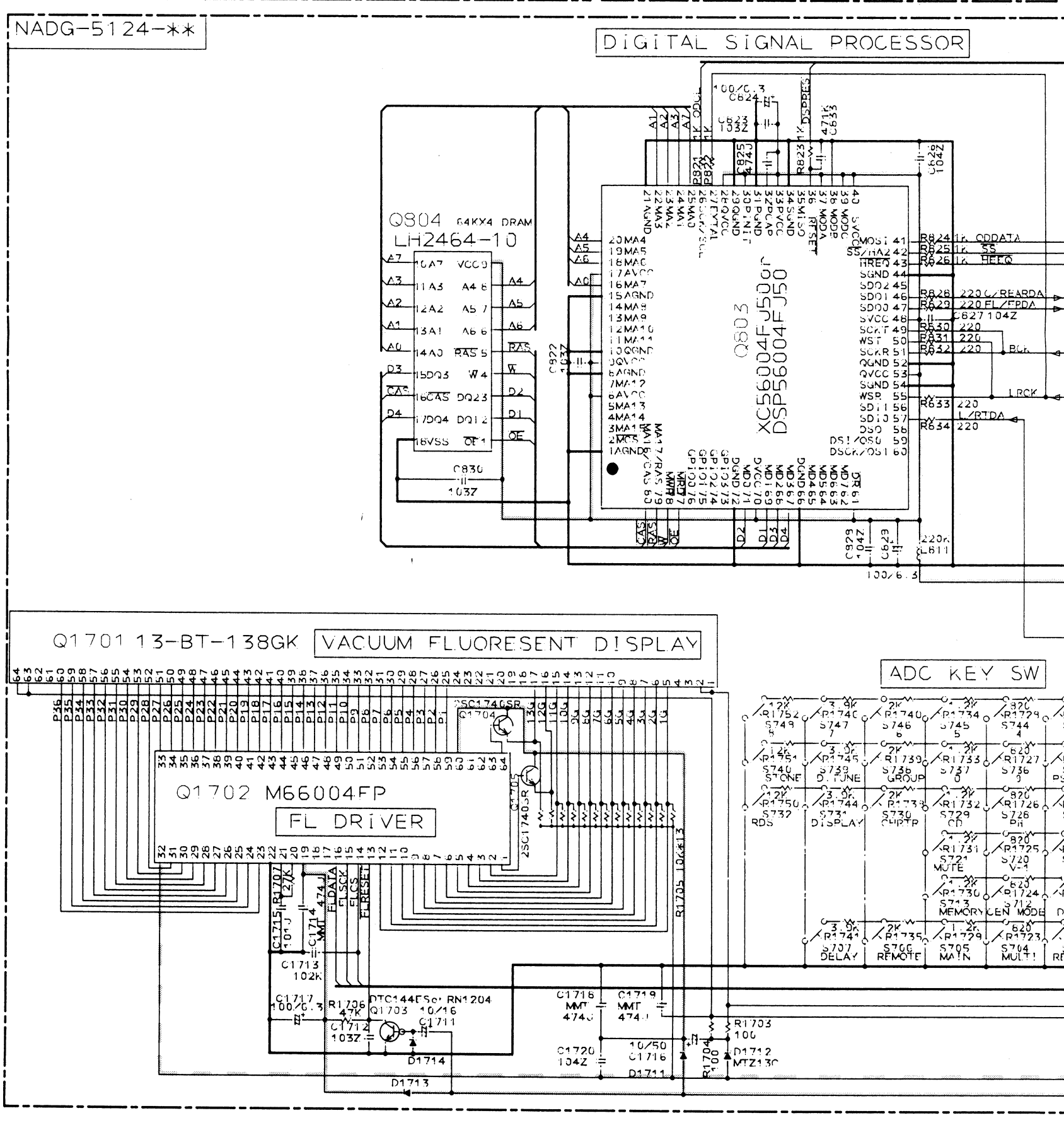

www.manualscenter.com

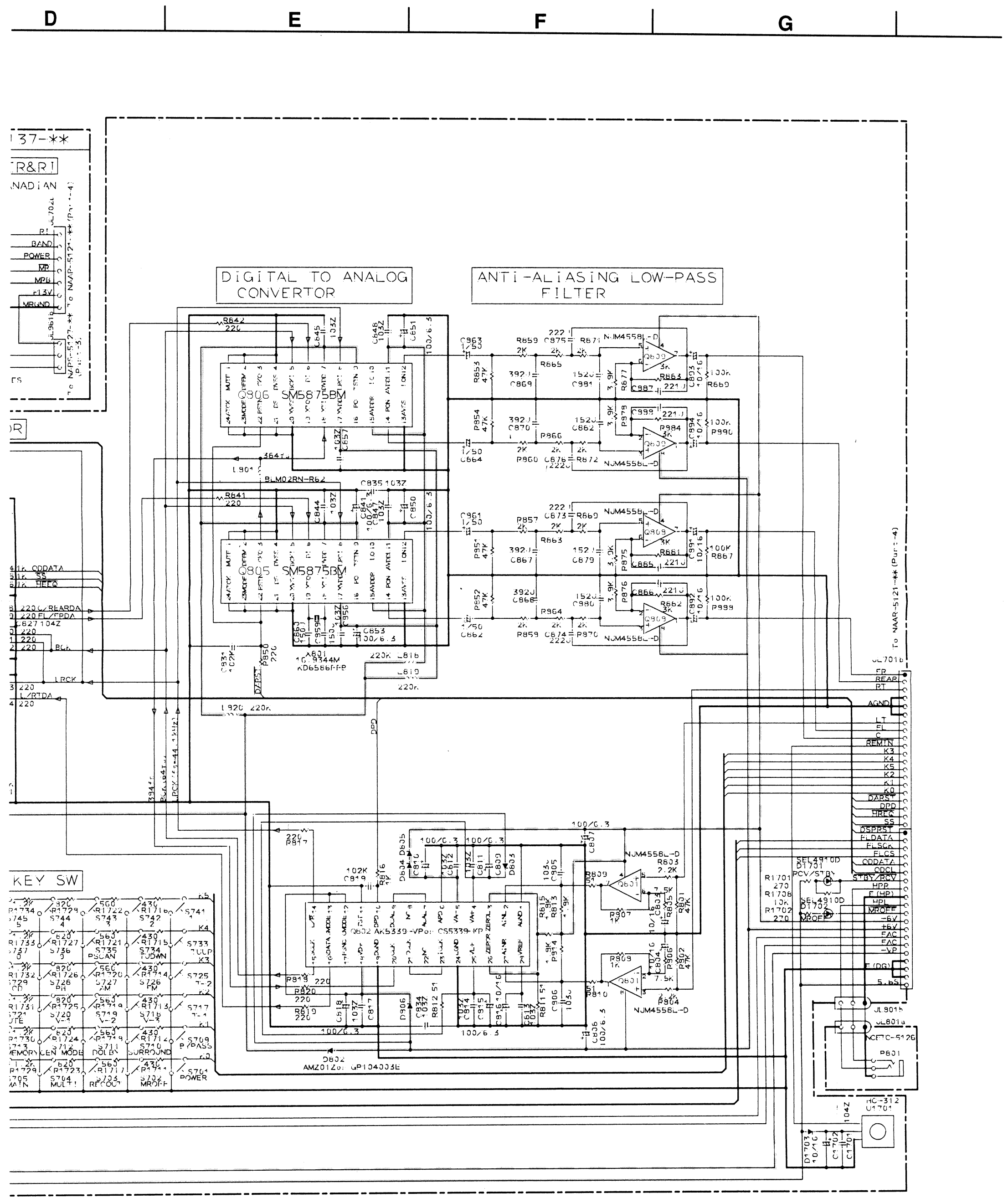
D
E
F
G
DIGITAL TO ANALOG CONVERTOR
ANTI-ALIASING LOW-PASS FILTER
KEY SW
Q806 SM5875BM
Q805 SM5875BM
Q802 AK5339-VP or CS5339-KP
NJM4558L-D
X801 16.9344M KD6586FFP
D802 AMZ01Z or GP104003E
SEL4910D
NCFTC-5126
HC-312

SCHEMATIC DIAGRAM

Part 2

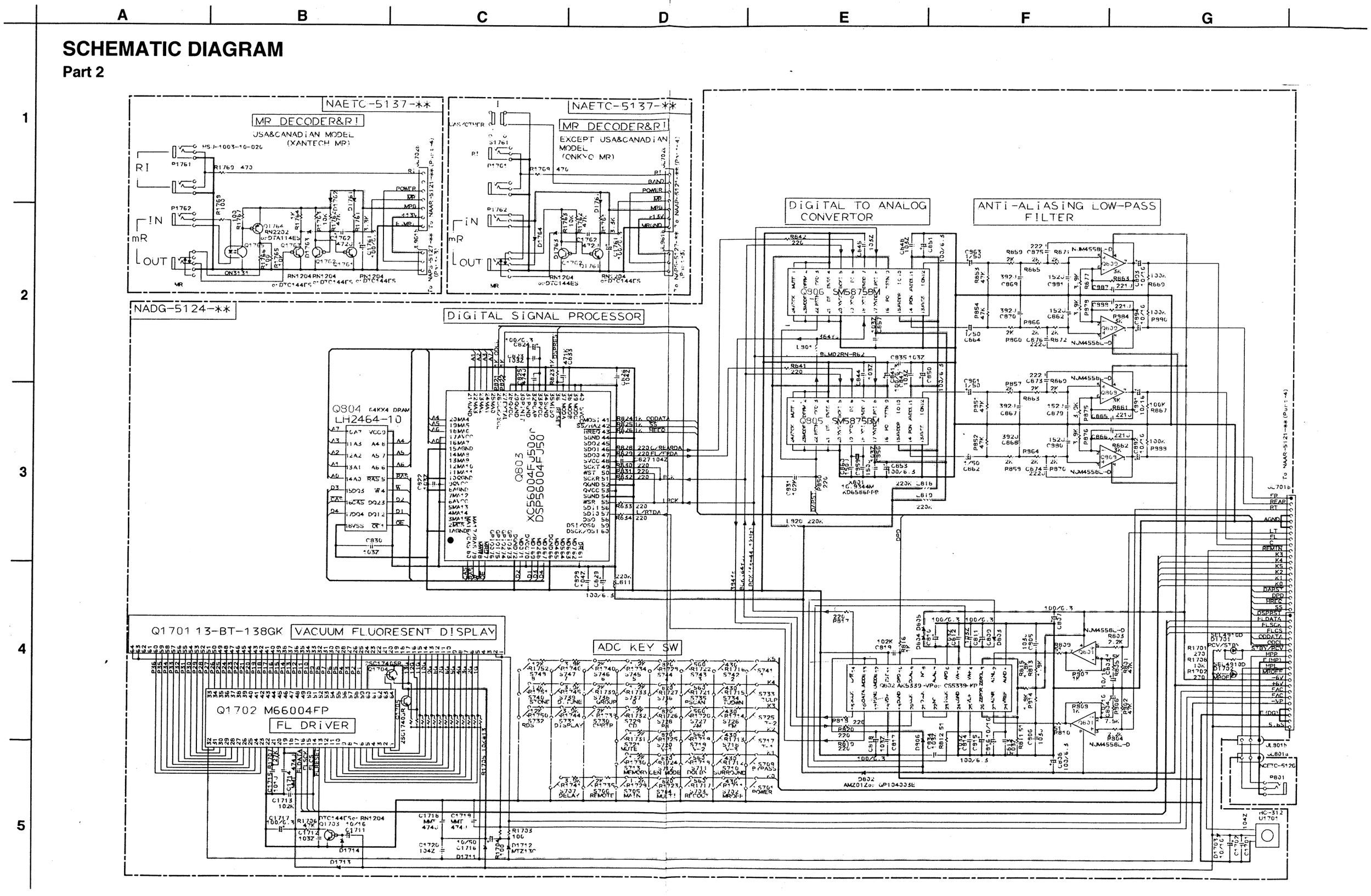

www.manualscenter.com

PRINTED CIRCUIT BOARD VIEW FROM BOTTOM SIDE

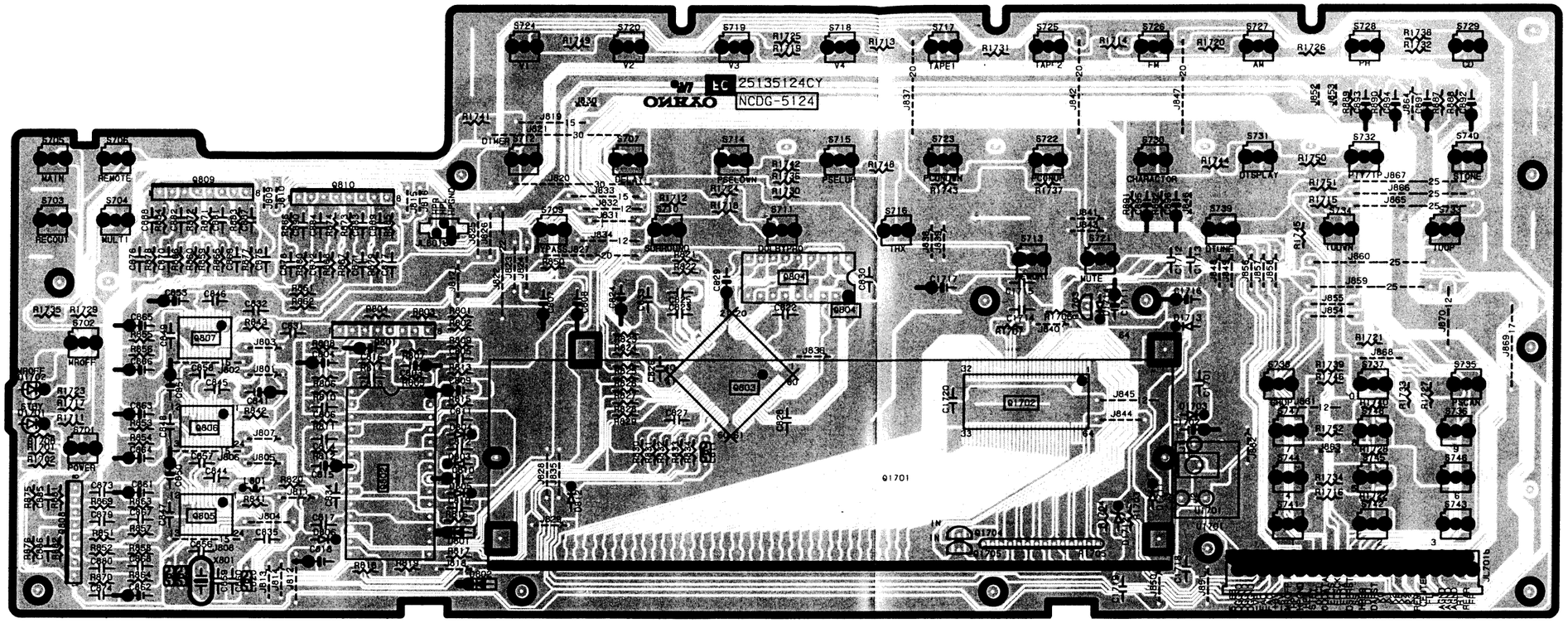

DISPLAY CIRCUIT PC BOARD

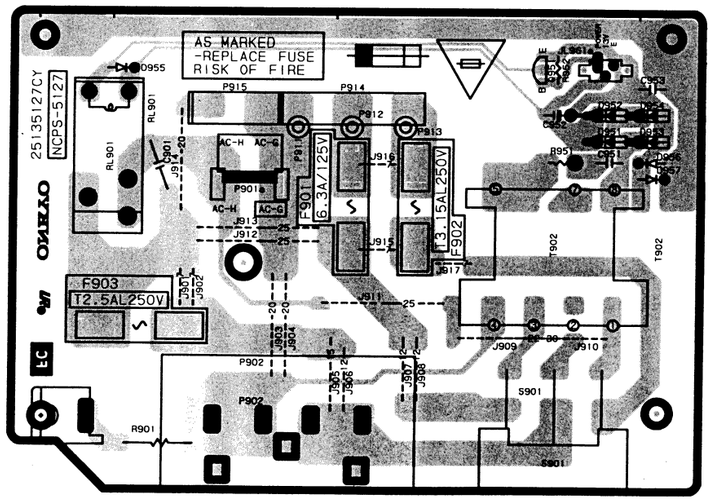

PRIMARY CIRCUIT PC BOARD

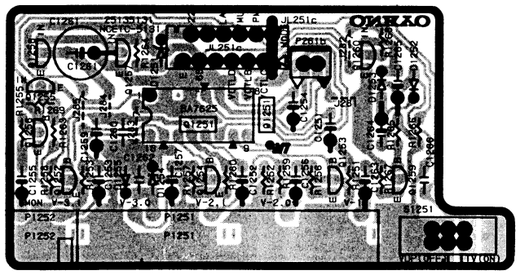

VIDEO CIRCUIT PC BOARD

www.manualscenter.com

PRINTED CIRCUIT BOARD VIEW FROM BOTTOM SIDE

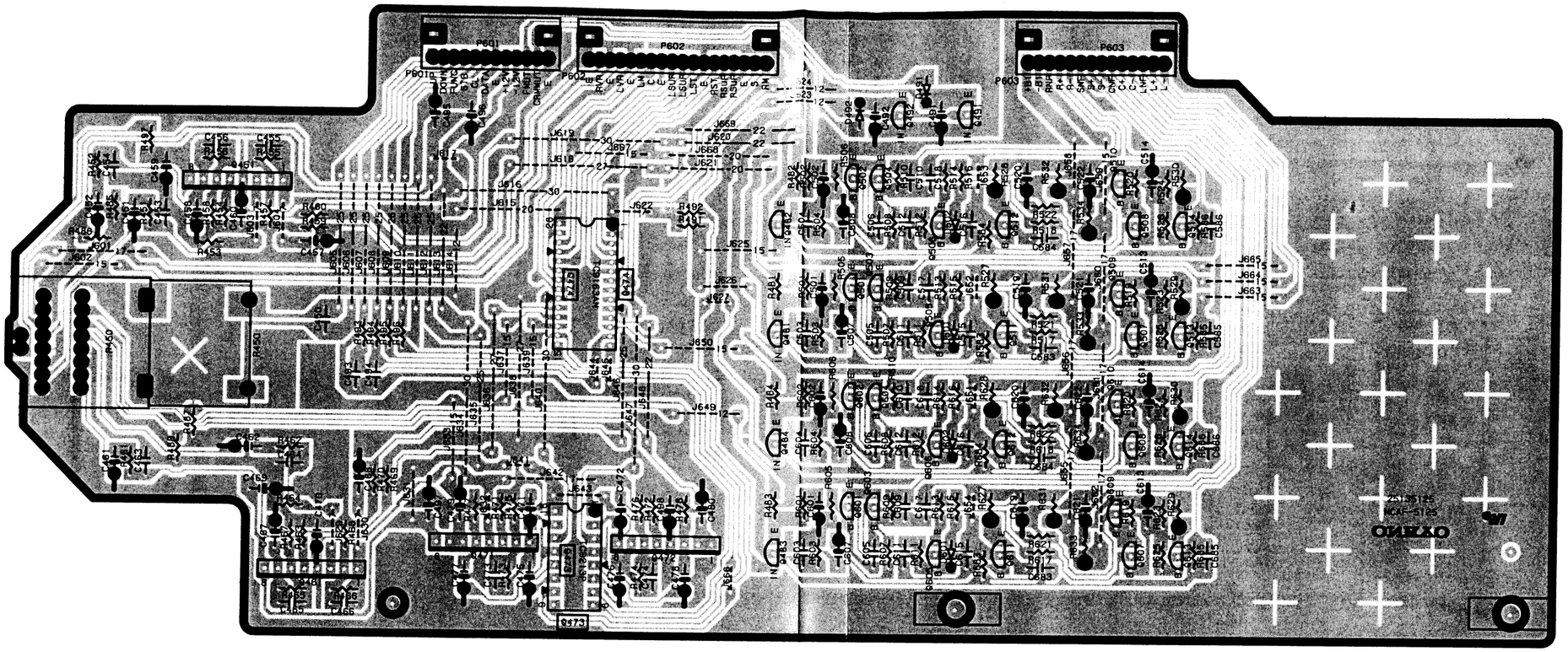

MASTER VOLUME CIRCUIT PC BOARD

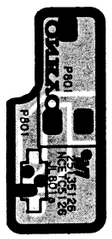

HEADPHONE TERMINAL PC BOARD

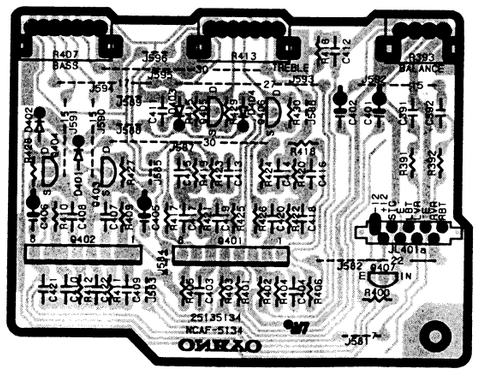

TONE CONTROL CIRCUIT PC BOARD

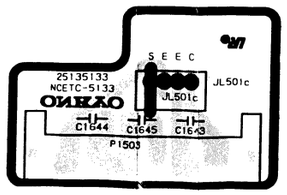

SPEAKER TERMINAL PC BOARD

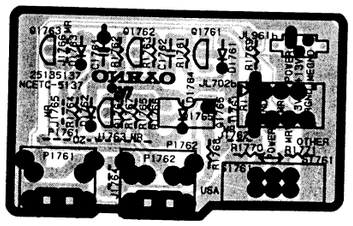

MR/RI TERMINAL PC BOARD

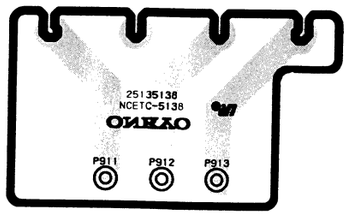

TRANSFORMER TERMINAL PC BOARD

www.manualscenter.com

SCHEMATIC DIAGRAM

Part 3

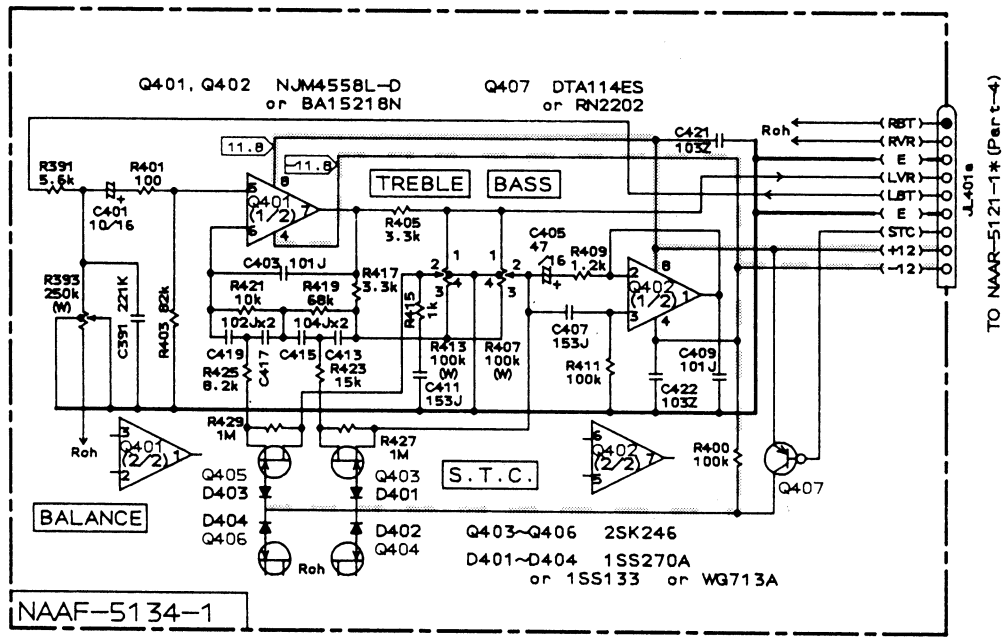

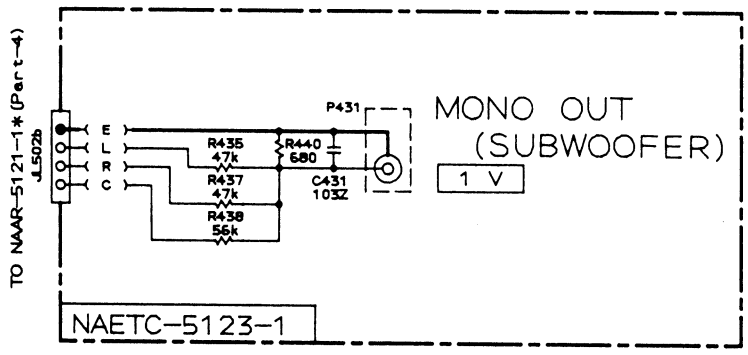

www.manualscenter.com

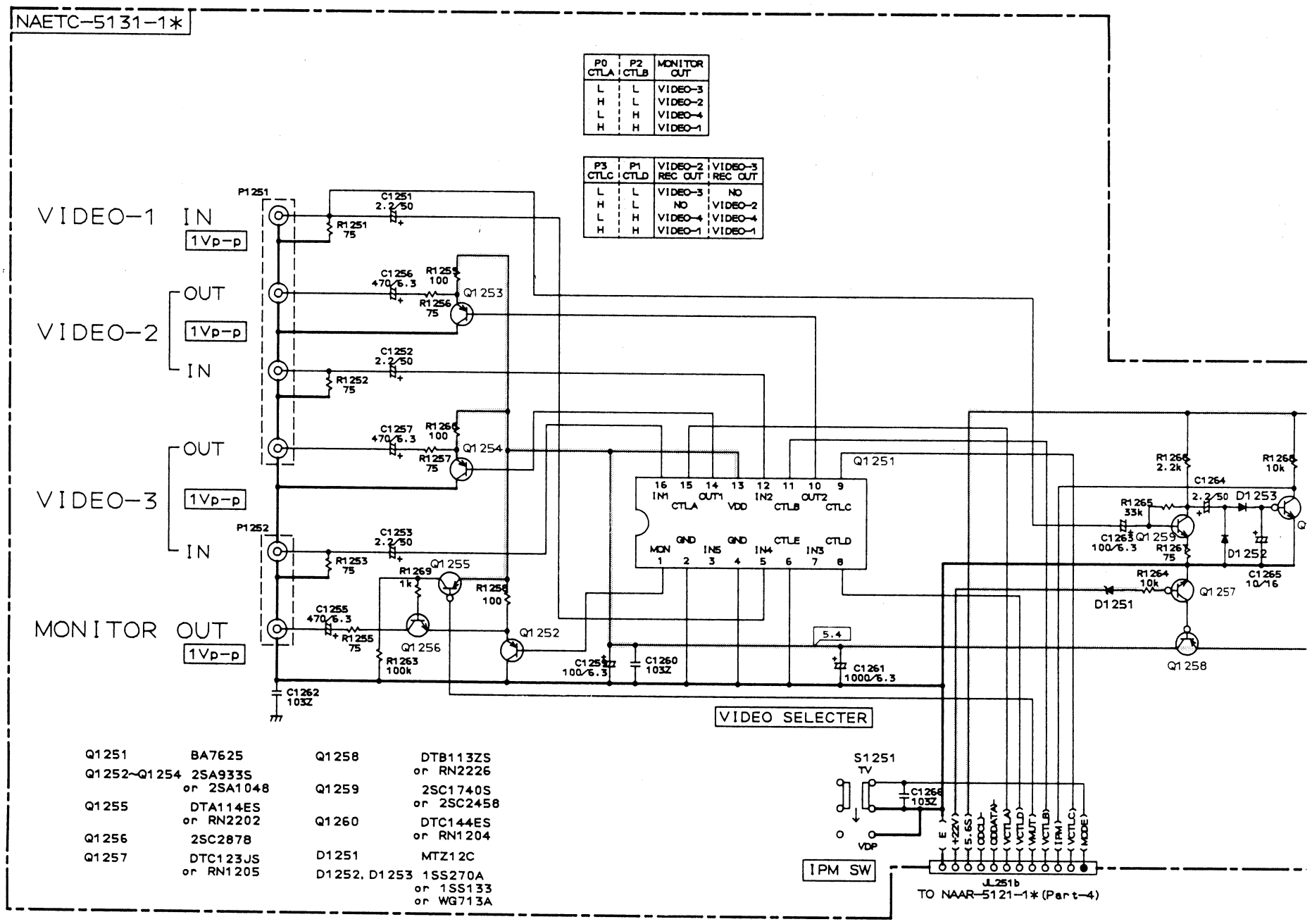

P0 CTLA	P2 CTLB	MONITOR OUT
L	L	VIDEO-3
H	L	VIDEO-2
L	H	VIDEO-4
H	H	VIDEO-1

P3 CTLC	P1 CTLD	VIDEO-2 REC OUT	VIDEO-3 REC OUT
L	L	VIDEO-3	NO
H	L	NO	VIDEO-2
L	H	VIDEO-4	VIDEO-4
H	H	VIDEO-1	VIDEO-1

D | E | F | G

MD type : 120V/60Hz Area
MDN type : U.S.A.
MDC type : Canada

MP type : 230V/50Hz Area
MP type : Europe (MODEL No. TX-SV525R)
MPV type : Germany (MODEL No. TX-SV525R)
MPA type : Australia

MG type : 220V/60Hz Area
MGK type : South Korea

MW type : 120V or 220V Switchable
MW type : Worldwide
MWX type : For PX

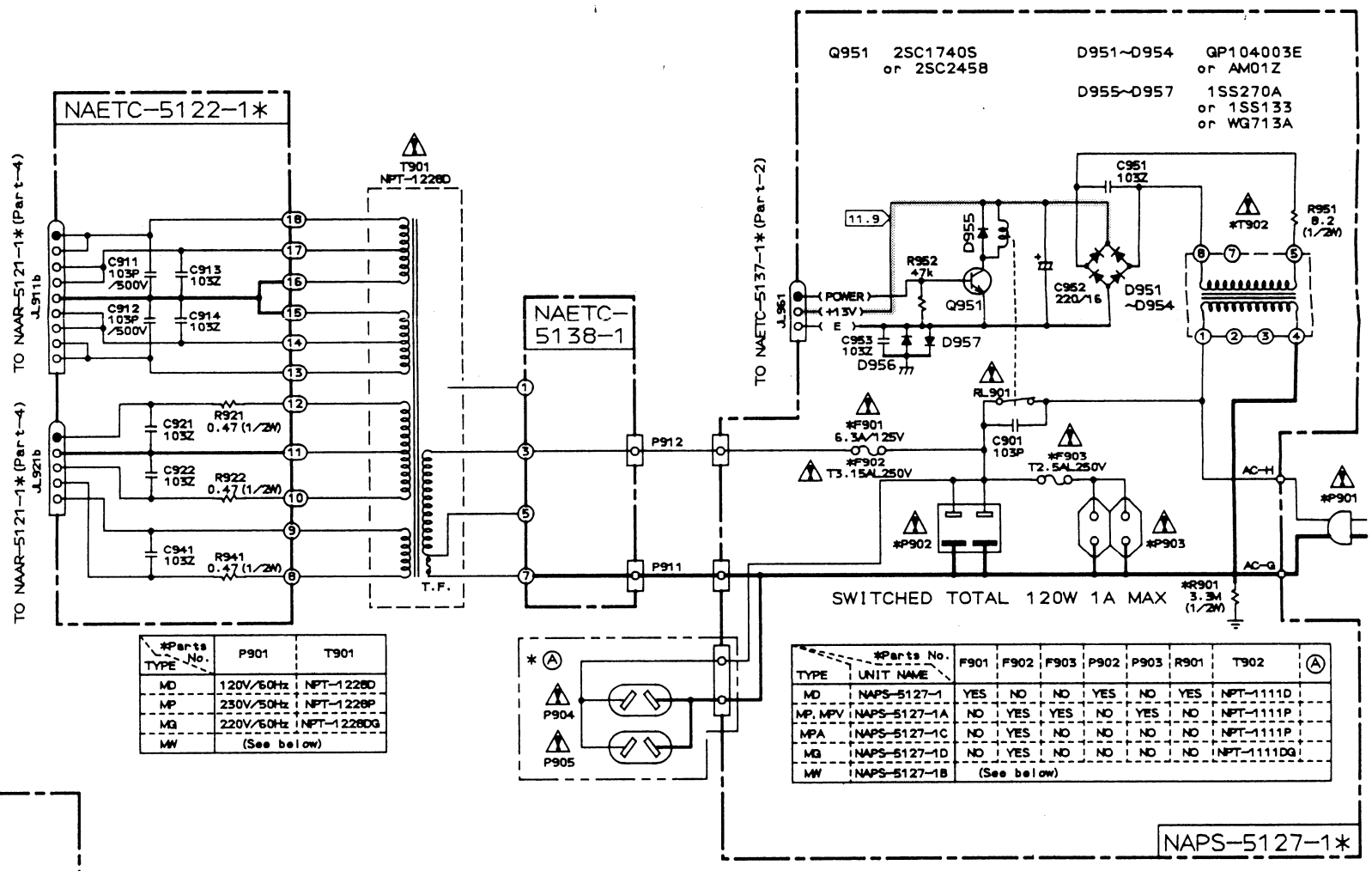

*Parts No. / TYPE	P901	T901
MD	120V/60Hz	NPT-1228D
MP	230V/50Hz	NPT-1228P
MG	220V/60Hz	NPT-1228DG
MW	(See below)	

TYPE	*Parts No. / UNIT NAME	F901	F902	F903	P902	P903	R901	T902	Ⓐ
MD	NAPS-5127-1	YES	NO	NO	YES	NO	YES	NPT-1111D	
MP, MPV	NAPS-5127-1A	NO	YES	YES	NO	YES	NO	NPT-1111P	
MPA	NAPS-5127-1C	NO	YES	NO	NO	NO	NO	NPT-1111P	
MG	NAPS-5127-1D	NO	YES	NO	NO	NO	NO	NPT-1111DG	
MW	NAPS-5127-1B	(See below)							

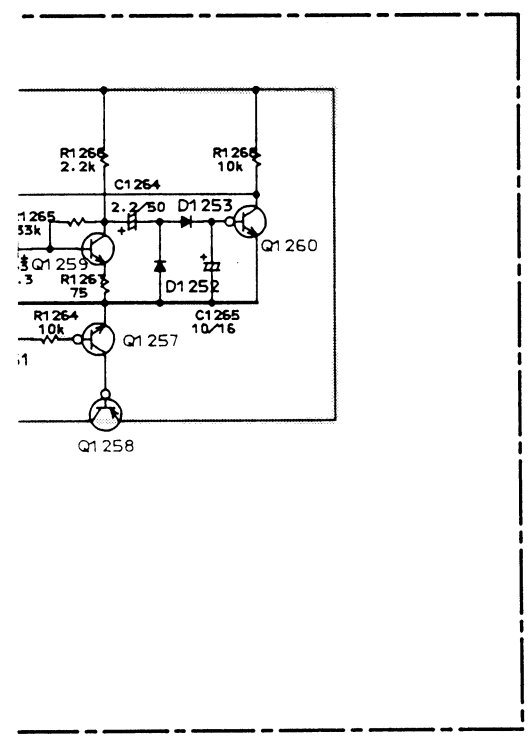

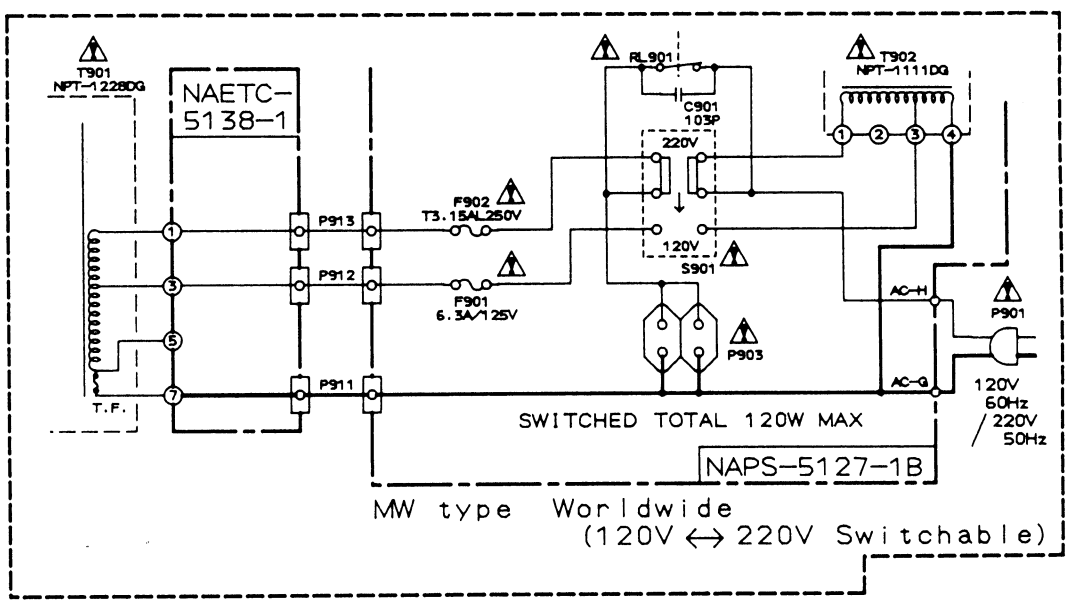

www.manualscenter.com

SCHEMATIC DIAGRAM

Part 4

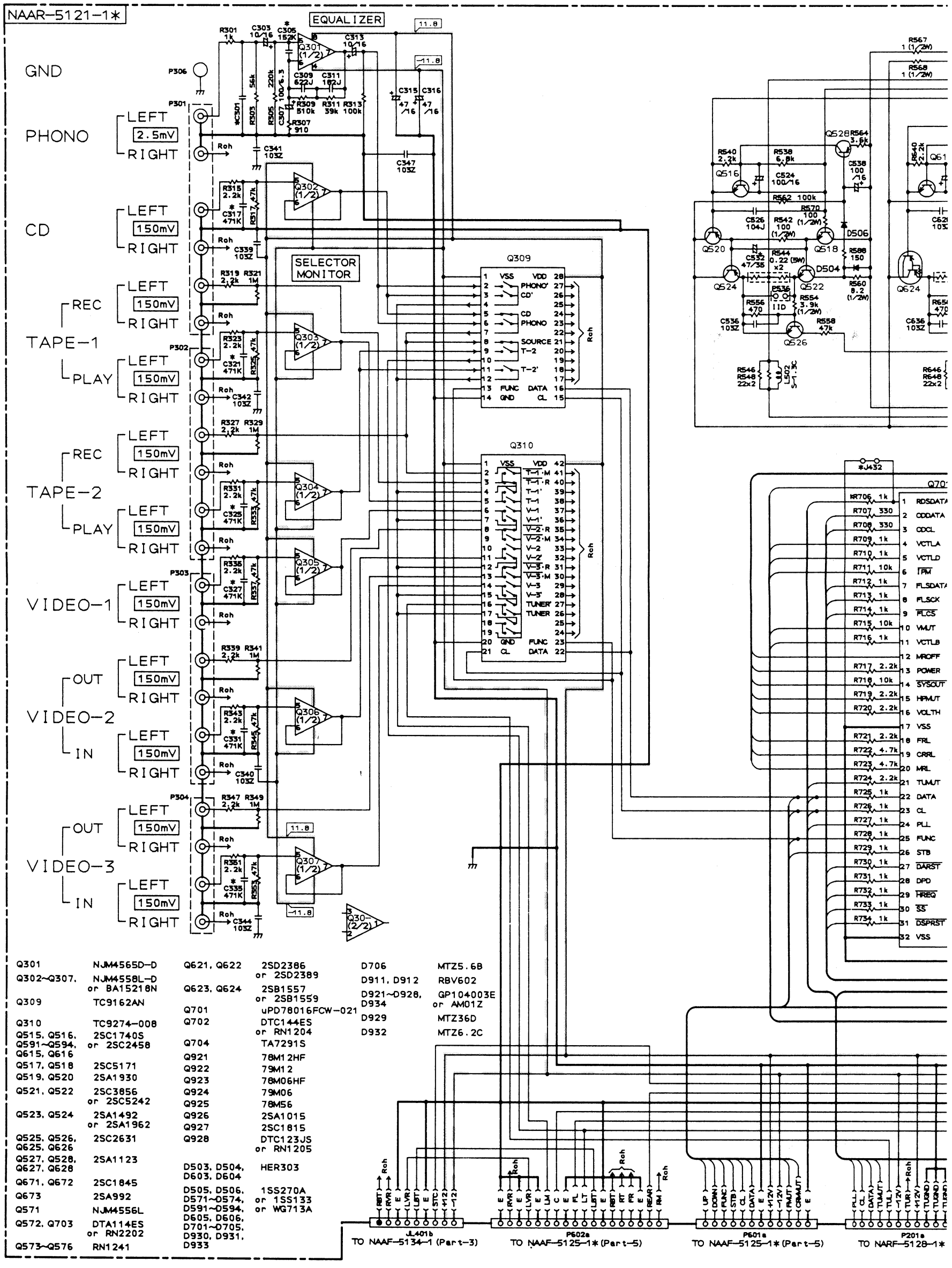

Q301	NJM4565D-D	Q621, Q622	2SD2386 or 2SD2389	D706	MTZ5.6B
Q302~Q307,	NJM4558L-D or BA15218N	Q623, Q624	2SB1557 or 2SB1559	D911, D912	RBV602
Q309	TC9162AN	Q701	uPD78016FCW-021	D921~D928, D934	GP104003E or AM01Z
Q310	TC9274-008	Q702	DTC144ES or RN1204	D929	MTZ36D
Q515, Q516, Q591~Q594, Q615, Q616	2SC1740S or 2SC2458	Q704	TA7291S	D932	MTZ6.2C
Q517, Q518	2SC5171	Q921	78M12HF		
Q519, Q520	2SA1930	Q922	79M12		
Q521, Q522	2SC3856 or 2SC5242	Q923	78M06HF		
Q523, Q524	2SA1492 or 2SA1962	Q924	79M06		
Q525, Q526, Q625, Q626	2SC2631	Q925	78M56		
Q527, Q528, Q627, Q628	2SA1123	Q926	2SA1015		
Q671, Q672	2SC1845	Q927	2SC1815		
Q673	2SA992	Q928	DTC123JS or RN1205		
Q571	NJM4556L	D503, D504, D603, D604	HER303		
Q572, Q703	DTA114ES or RN2202	D505, D506, D571~D574, D591~D594, D605, D606, D701~D705, D930, D931, D933	1SS270A or 1SS133 or WG713A		
Q573~Q576	RN1241				

www.manualscenter.com

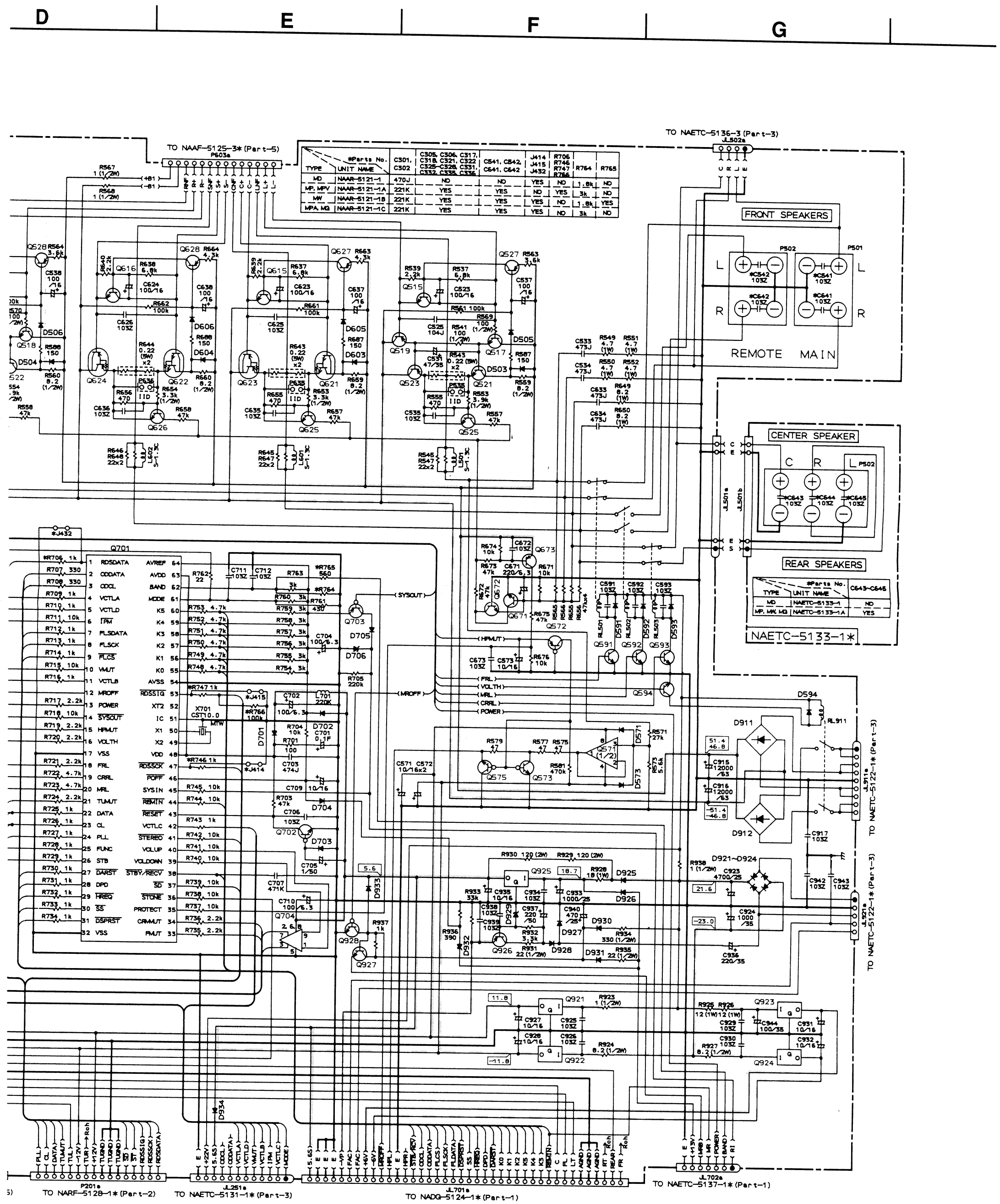

TYPE \ *Parts No. / UNIT NAME	C301, C302	C305, C306, C317, C318, C321, C322, C325-C328, C331, C332, C335, C336	C541, C542, C641, C642	J414, J415, J432	R706, R746, R747, R766	R764	R765
MD NAAR-5121-1	470J	NO	NO	YES	NO	1.8k	NO
MP, MPV NAAR-5121-1A	221K	YES	YES	NO	YES	3k	NO
MW NAAR-5121-1B	221K	YES	YES	YES	NO	1.8k	YES
MPA, MQ NAAR-5121-1C	221K	YES	YES	YES	NO	3k	NO

TYPE \ *Parts No. / UNIT NAME	C643-C645
MD NAETC-5133-1	NO
MP, MW, MQ NAETC-5133-1A	YES

PRINTED CIRCUIT BOARD VIEW FROM BOTTOM SIDE

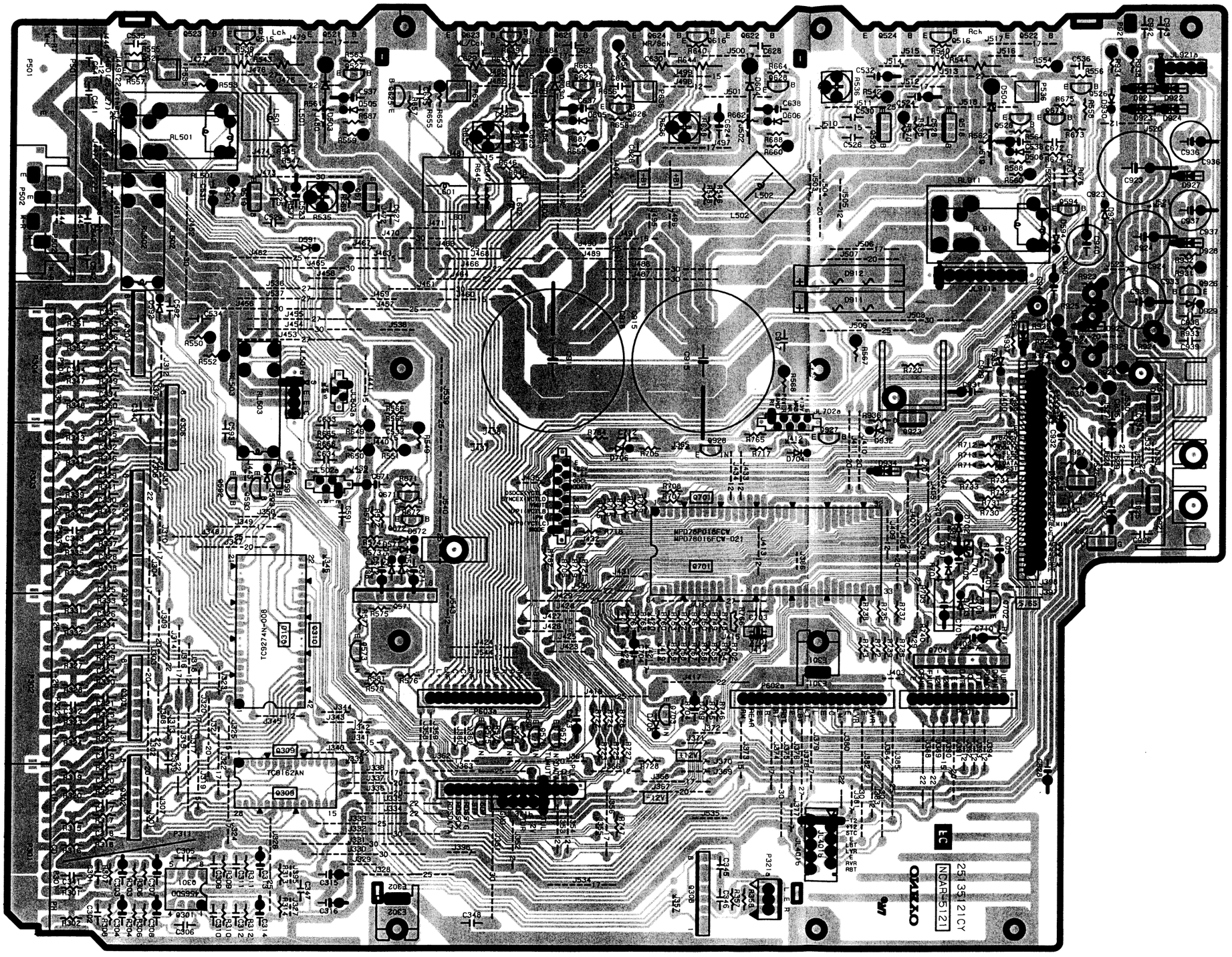

MAIN CIRCUIT PC BOARD

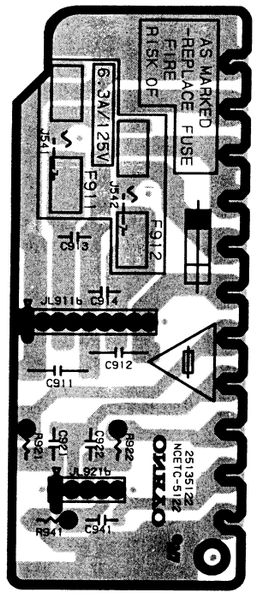

SECONDARY CIRCUIT PC BOARD

PREOUT TERMINAL PC BOARD

www.manualscenter.com

PRINTED CIRCUIT BOARD-PARTS LIST

CAUTION:Replacement of the transistor of mark *, if necessary, must be made from the same beta group (Hrz) as the original type.

NOTE: THE COMPONENTS IDENTIFIED BY MARK ⚠ ARE CRITICAL FOR RISK OF FIRE AND ELECTRIC SHOCK. REPLACE ONLY WITH PART NUMBER SPECIFIED.

CIRCUIT NO.	PART NO.	DESCRIPTION
	Capacitors	
C885-C888	370132214	220pF±5%,100V,APS
C891-C894	353741009	10μ F,16V,Elect.
	Resistor	
R1705	49163103413	10k×13 RM1/101J, Array
	Push switches	
S701-S706	25035652	NPS-111-S604
S709-S713	25035652	NPS-111-S604
S717-S721	25035652	NPS-111-S604
S725-S729	25035652	NPS-111-S604
S730-S732	25035652	NPS-111-S604 <P>
S733-S748	25035652	NPS-111-S604
	Holder	
	27190913Y	
	Wire holders	
JL701b	25050946	NSCT-40P733
JL801b	25051087	NSCT-3P874

MASTER VOLUME CIRCUIT PC BOARD (NAAF-5125-1/1A)

CIRCUIT NO.	PART NO.	DESCRIPTION
	ICs	
Q451,Q461	22240293 or	NJM4558L-D or
Q471,Q472	22240247	BA15218N
Q473	22240266	TC9213P
Q474	22240799	TC9163AN
	Transistors	
Q481-Q484	2213631 or	RN1241-A or
	2213632	RN1241-B
Q491,Q492	2213510 or	DTA114ES or
	2214350	RN2202
Q501-Q504	2211732 or	* 2SC1845-F or
Q601-Q604	2211733	* 2SC1845-E
Q505,Q506	2213354 or	2SA933S-R or
Q605,Q606	2212125	2SA1048-GR
Q507,Q508	2211732 or	2SC1845-F or
Q607,Q608	2211733	2SC1845-E
Q509,Q510	2213284 or	2SC1740S-R or
Q609,Q610	2212115	2SC2458-GR
Q511,Q512	2211353 or	2SA949-O or
Q611,Q612	2211354	2SA949-Y
Q513,Q514	2211633 or	2SC2229-O or
Q613,Q614	2211634	2SC2229-Y
	Diodes	
D491,D492	223205	1SS270A
D501,D502	223163 or	1SS133 or
D601,D602	223222	WG713A
	Capacitors	
C451,C452	354780229	2.2μ F,50V,Elect.
C457-C460	354741009	10μ F,16V,Elect.
C461,C462	354780229	2.2μ F,50V,Elect.
C467-C470	354741009	10μ F,16V,Elect.
C471,C472	354780229	2.2μ F,50V,Elect.
C475,C476	354741009	10μ F,16V,Elect.
C477,C478	354780229	2.2μ F,50V,Elect.
C479,C480	354741009	10μ F,16V,Elect.
C491,C492	354741009	10μ F,16V,Elect.
C495-C498	354741009	10μ F,16V,Elect.
C501,C502	354781009	10μ F,50V,Elect.
C503,C504	374724714	470pF±5%,50V,Plastic
C507,C508	354742219	220μ F,16V,Elect.

CIRCUIT NO.	PART NO.	DESCRIPTION
	Capacitors	
C511,C512	374722224	2200pF±5%,50V,Plastic
C513,C514	354721019	100μ F,6.3V,Elect.
C519-C522	354700109	1μ F,160V,Elect.
C601,C602	354781009	10μ F,50V,Elect.
C607,C608	354742219	220μ F,16V,Elect.
C613,C614	354721019	100μ F,6.3V,Elect.
C619-C622	354700109	1μ F,160V,Elect.
	Resistors	
R450	5104348AY or	N16RQL50KA25F
	5104349AY	Variable
R527,R528	443522204	22 Ohm±5%,1/2W,Metal oxide
R529,R530	443528204	82 Ohm±5%,1/2W,Metal oxide
R531-R534	453530224	2.2 Ohm±5%,1/2W,Metal
R627,R628	443522204	22 Ohm±5%,1/2W,Metal oxide
R629,R630	443528204	82 Ohm±5%,1/2W,Metal oxide
R631-R634	453530224	2.2 Ohm±5%,1/2W,Metal
	Sockets	
P601	25050985	NSCT-12P772
P602	25050988	NSCT-18P775
P603	25050986	NSCT-14P773

HEADPHONE TERMINAL PC BOARD (NAETC-5126-1)

CIRCUIT NO.	PART NO.	DESCRIPTION
JL801a	25051087	NSCT-3P874,Wire holder
P801	25045255	YKB26-5009,Headphone jack

PRIMARY CIRCUIT PC BOARD (NAPS-5127-1/1A/1B/1C/1D)

CIRCUIT NO.	PART NO.	DESCRIPTION
	Transistor	
Q951	2213284 or	2SC1740S-R or
	2212115	2SC2458-GR
	Diodes	
D951-D954	22380046 or	AM01Z or
	22380035	GP104003E
D955-D957	223205	1SS270A
	223163 or	1SS133 or
	223222	WG713A
	Power transformer	
T901	2300670AY	! NPT-1111D <D>
	2300671AY	! NPT-1111P <P>
	2300672AY	! NPT-1111DG <W>
	Capacitors	
C901	3500065A	! DE7150FZ103P AC400/125V,IS
C952	354742219	220μ F,16V,Elect.
	Resistors	
R901	431523355	! 3.3 Mohm,1/2W,Solid <D>
R951	453530824	8.2 Ohm±5%,1/2W,Metal
	Relay	
RL901	25065248	! NRL-1P15A-DC12-29 <D/W>
	25065483	! NRL-1P15A-DC12-084 <P>
	Plug	
P901a	25055675	NPLG-2P631 <D/P>
	AC outlet	
P902	25051126	! NSCT-4P913 <D>
	25051125	! NSCT-4P912 <P/W>
	Fuseholders	
F901a	25050065	! YSH403T <D/W>
F902a	25050065	! YSH403T <P/W>
F903a	25050065	! YSH403T <P>

CIRCUIT NO.	PART NO.	DESCRIPTION
	Fuse	
F901	252166Y	! 6.3A-UL/T-237, Primary <D/W>
F902	252076	! 3.15A-SE-EAK, Primary <P/W>
F903	252075	! 2.5A-SE-EAK, AC outlet <P>
	Wire holder	
JL961a	25051087	NSCT-3P874
	Switch	
S901	25065437	! NSS-22157P, Voltage selector <W>

VIDEO CIRCUIT PC BOARD (NAETC-5131-1)

CIRCUIT NO.	PART NO.	DESCRIPTION
	IC	
Q1251	22240373	BA7625
	Transistors	
Q1252-Q1254	2213354 or	2SA933S-R or
	2212125	2SA1048-GR
Q1255	2213510 or	DTA114ES or
	2214350	RN2202
Q1256	2212285 or	2SC2878-A or
	2212286	2SC2878-B
Q1257	2213640 or	DTC123JS or
	2214660	RN1205
Q1258	2213830 or	DTB113ZS or
	2214690	RN2226
Q1259	2213284 or	2SC1740S-R or
	2212115	2SC2458-GR
Q1260	221282 or	DTC144ES or
	2213560	RN1204
	Diodes	
D1251	224451203	MTZ12C
D1252,D1253	223205	1SS270A
	223163 or	1SS133 or
	223222	WG713A
	Capacitors	
C1251-C1253	354780229	2.2μ F,50V,Elect.
C1255-C1257	354724719	470μ F,6.3V,Elect.
C1259	354721019	100μ F,6.3V,Elect.
C1261	354721029	1000μ F,6.3V,Elect.
C1263	354721019	100μ F,6.3V,Elect.
C1264	354780229	2.2μ F,50V,Elect.
C1265	354741009	10μ F,16V,Elect.
	Switch	
S1251	25065286	NSS-22112
	Terminals	
P1251	25045339	NPJ-4PDYE190
P1252	25045395	NPJ-2PDYE221
	Wire trap	
JL251c	25055633	NPLG-12P595

SPEAKER TERMINAL PC BOARD (NAETC-5133-1/1A)

CIRCUIT NO.	PART NO.	DESCRIPTION
P1503	25060191	NTM6DML113,Speaker terminal
JL501c	25050268	NSCT-4P96, Wire trap

TONE CONTROL CIRCUIT PC BOARD (NAAF-5134-1)

CIRCUIT NO.	PART NO.	DESCRIPTION
	ICs	
Q401,Q402	22240293 or	NJM4558L-D or
	22240247	BA15218N
	Transistors	
Q403-Q406	2211945	2SK246-GR
Q407	2213510 or	DTA114ES or
	2214350	RN2202
	Diodes	
D401-D404	223205	1SS270A
	223163 or	1SS133 or
	223222	WG713A
	Capacitors	
C401,C402	354741009	10μ F,16V,Elect.
C405,C406	354744709	47μ F,16V,Elect.
C407,C408	374721534	0.015μ F±5%,50V,Plastic
C411,C412	374721534	0.015É F±5%,50V,Plastic
C413-C416	374721044	0.1μ F±5%,50V,Plastic
C417-C420	374721024	1000pF±5%,50V,Plastic
	Resistors	
R393	5104225	N11RGLC250KW22Z, Variable
R407,R413	5104230	N14RLC100KWT22Z,Variable
	Wire holder	
JL401a	25051093	NSCT-9P880

MR/RI TERMINAL PC BOARD (NAETC-5137-1/1A/1B)

CIRCUIT NO.	PART NO.	DESCRIPTION
	Transistors	
Q1761,Q1762	221282 or	DTC144ES or
	2213560	RN1204
Q1763	221282 or	DTC144ES or
	2213560	RN1204 <D>
Q1764	2213510 or	DTA114ES or
	2214350	RN2202 <D>
	Photo coupler	
Q1765	24120043	ON3131 <D>
	Diodes	
D1761,D1763	223205	1SS270A
	223163 or	1SS133 or
	223222	WG713A
D1762	223205	1SS270A
	223163 or	1SS133 or
	223222	WG713A <D>
D1764	223205	1SS270A
	223163 or	1SS133 or
	223222	WG713A <P/W>
	Capacitors	
C1761	354721019	100É F,6.3V,Elect.
C1762	374724724	4700pFÅ}5%,50V,Plastic
	Terminals	
P1761	25045172	HSJ-1003-01-020,RI
P1762	25045433	HSJ-1003-01-013,XANTECH <D>
	25045293	HSJ-1003-01-012,MR <P/W>
	Wire trap	
JL702b	25055628	NSCT-7P590
	Wire holder	
JL961b	25051087	NSCT-3P874
	Switch	
S1761	250650286	NSS-22112, Band step <W>

www.manualscenter.com

SCHEMATIC DIAGRAM

Part 5

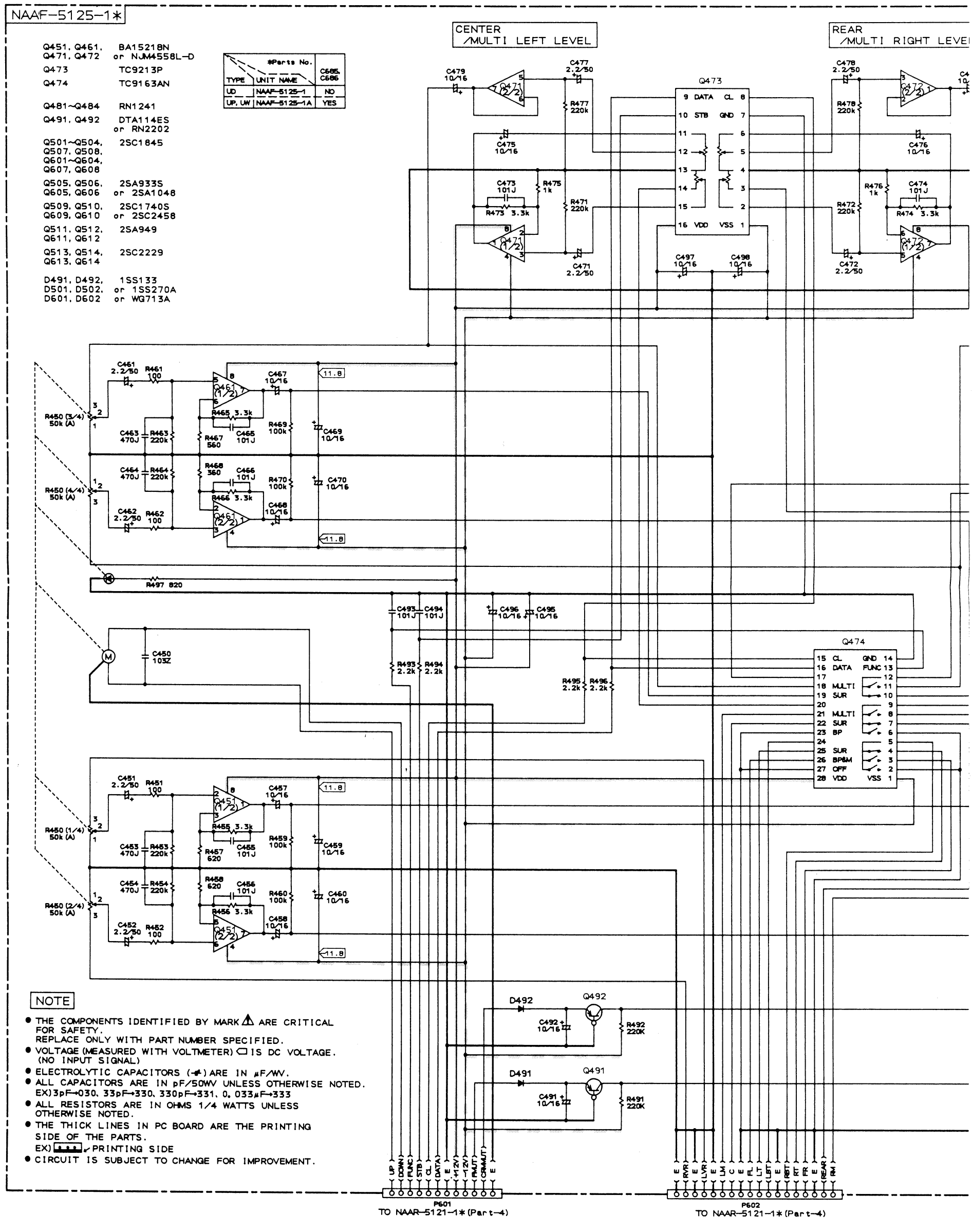

www.manualscenter.com

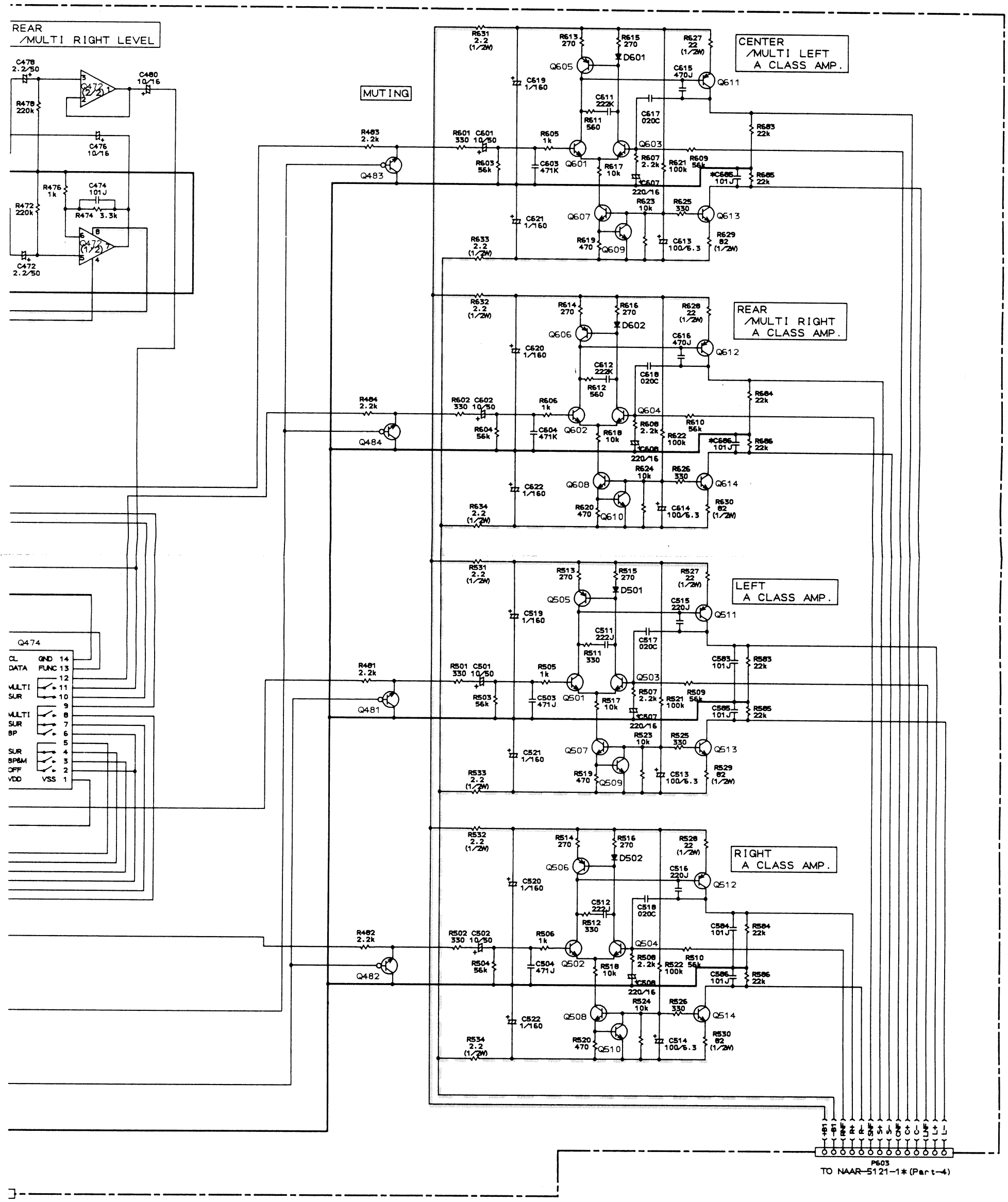

www.manualscenter.com

SCHEMATIC DIAGRAM

Part 6

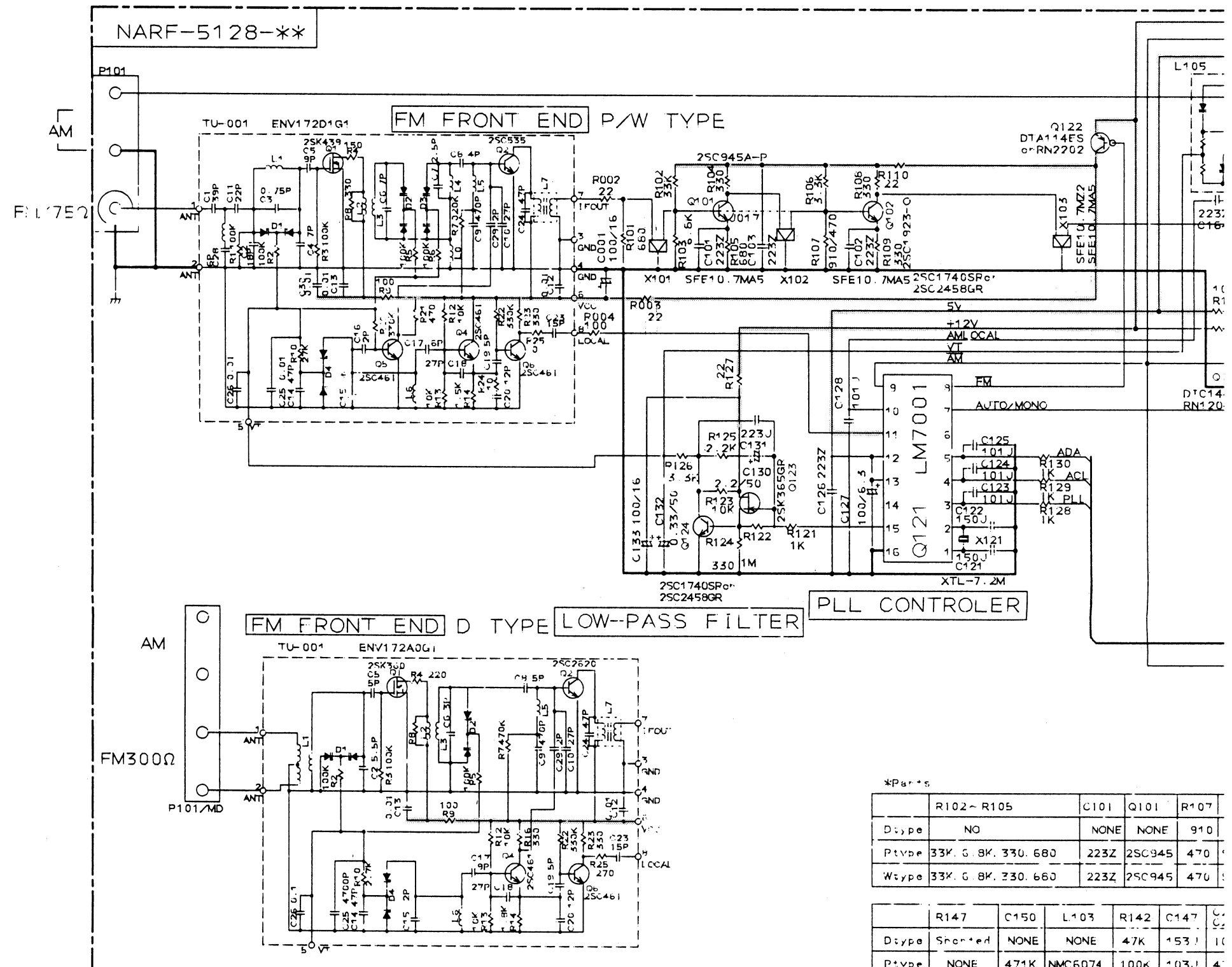

*Parts

	R102~R105	C101	Q101	R107
Dtype	NO	NONE	NONE	910
Ptype	33K, 6.8K, 330, 680	223Z	2SC945	470
Wtype	33K, 6.8K, 330, 680	223Z	2SC945	470

	R147	C150	L103	R142	C147
Dtype	Shorted	NONE	NONE	47K	153J
Ptype	NONE	471K	NMC6074	100K	103J
Wtype	NONE	471K	NMC6074	100K	103J

www.manualscenter.com

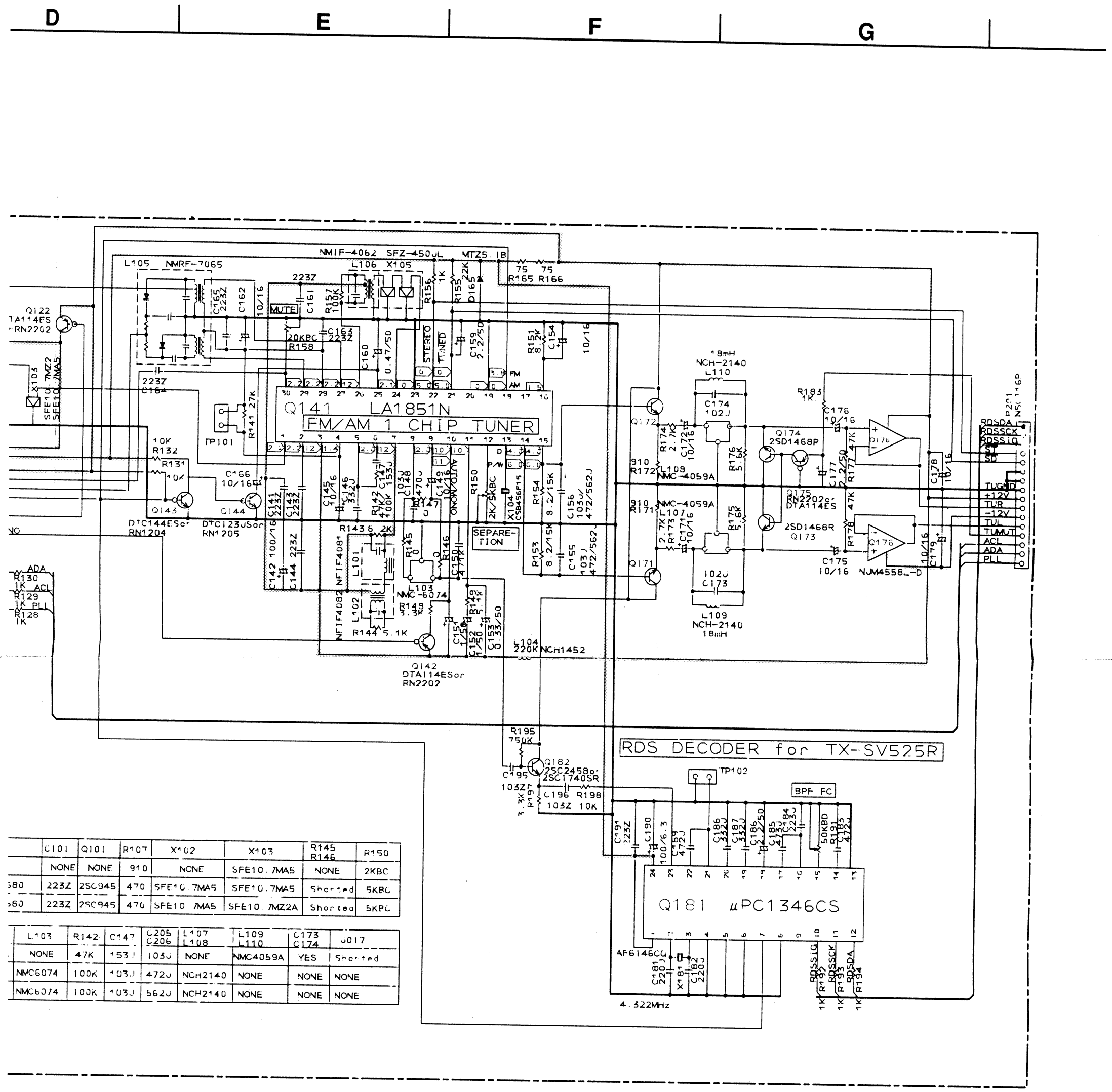

	C101	Q101	R107	X102	X103	R145 R146	R150
	NONE	NONE	910	NONE	SFE10.7MA5	NONE	2KBC
680	223Z	2SC945	470	SFE10.7MA5	SFE10.7MA5	Shorted	5KBC
680	223Z	2SC945	470	SFE10.7MA5	SFE10.7MZ2A	Shorted	5KBC

	L103	R142	C147	C205 C206	L107 L108	L109 L110	C173 C174	J017
	NONE	47K	153J	103J	NONE	NMC4059A	YES	Shorted
	NMC6074	100K	103J	472J	NCH2140	NONE	NONE	NONE
	NMC6074	100K	103J	562J	NCH2140	NONE	NONE	NONE

www.manualscenter.com

PRINTED CIRCUIT BOARD-PARTS LIST

TUNER CIRCUIT PC BOARD (NARF-5128-1/1A/1B/1C)

CIRCUIT NO.	PART NO.	DESCRIPTION
	Front end	
TU001	240098Y	ENV172D1G1 <D>
	240099Y	ENV172A0G1 <P/W>
	ICs	
Q121	22240090	LM7001
Q141	22240749Y	LA1851N
Q176	22240293 or	NJM4558L-D or
	22240247	BA15218N
Q181	22240679	µ PC1346CS <P>
	Transistors	
Q101	2210746	2SC945A-P <P/W>
Q102	2211723	2SC1923-O
Q122,Q142	2213510 or	DTA114ES or
Q175	2214350	RN2202
Q123	2212445	2SK365-GR
Q124	2213284 or	2SC1740S-R or
Q171,Q172	2212115	2SC2458-GR
Q143	221282 or	DTC144ES or
	2213560	RN1204
Q144	2213640 or	DTC123JS or
	2214660	RN1205
Q173,Q174	2212794	2SD1468-R
Q182	2213284 or	2SC1740S-R or
	2212115	2SC2458-GR <P>
	Diode	
D165	224450512	MTZ5.1B
	Transformers	
L101	233457Y	NFIF-4081
L102	233458Y	NFIF-4082
L106	232139	NMIF-4062
	Coils	
L103	233471Y	NMC-6084 <P/W>
L104	233454M022	NCH-1452 022M
L107,L108	233355A	NMC-4059 <P/W>
L109,L110	231092	NCH-2140 <D>
	RF block	
L105	232163A	NMRF-7065
	Resonators	
X104	3010227Y	CSB456F15,Ceramic
X121	3010141	XTL-7.2M,Crystal
X181	3010203	AF6146CG <P>
	Ceramic filters	
X101	3010071	SFE10.7MA5
X102	3010071	SFE10.7MA5 <P/W>
X103	3010071	SFE10.7MA5 <D>
	3010130	SFE10.7MZ2A <P/W>
X105	3010123	SFZ450JL
	Capacitors	
C001	354741019	100µ F,16V,Elect.
C127	354721019	100µ F,6.3V,Elect.
C130	354780229	2.2µ F,50V,Elect.
C131	374722234	0.022É FÅ}5%,50V,Plastic
C132	354783399	0.33µ F,50V,Elect.
C133,C142	354741019	100µ F,16V,Elect.
C145	354741009	10µ F,16V,Elect.
C146	374723324	3300pF±5%,50V,Plastic
C147	374721534	0.015µ F±5%,50V,Plastic <D>
	374721034	0.01µ F±5%,50V,Plastic <P/W>
C149	354780479	4.7µ F,50V,Elect.

CIRCUIT NO.	PART NO.	DESCRIPTION
	Capacitors	
C151,C152	354780109	1µ F,50V,Elect.
C153	354783399	0.33µ F,50V,Elect.
C154	354741009	10µ F,16V,Elect.
C155,C156	374721034	0.01µ F±5%,50V,Plastic <D>
	374724324	4300pF±5%,50V,Plastic <P>
	374724724	4700pF±5%,50V,Plastic <W>
C159	354780229	2.2µ F,50V,Elect.
C160	354784799	0.47µ F,50V,Elect.
C162	354741009	10µ F,16V,Elect.
C166	354744709	47µ F,16V,Elect.
C171,C172	354741009	10µ F,16V,Elect.
C173,C174	374721024	1000pF±5%,50V,Plastic <D>
C175,C176	354741009	10µ F,16V,Elect.
C177	354780229	2.2µ F,50V,Elect.
C178,C179	354741009	10µ F,16V,Elect.
C183,C189	374724724	4700pF±5%,50V,Plastic <P>
C184	374722234	0.022É F±5%,50V,Plastic <P>
C185	374724734	0.047µ F±5%,50V,Plastic <P>
C186	354780229	2.2µ F,50V,Elect. <P>
C187,C188	374723324	3300pF±5%,50V,Plastic <P>
C190	354721019	100µ F,6.3V,Elect. <P>
	Resistors	
R150	5210259	N06HR2KBC, Trimming <D>
	5210261	N06HR5KBC, Trimming <P/W>
R158	5210263	N06HR20KBC, Trimming
R191	5210265	N06HR50KBC, Trimming <P>
	Terminal	
P101	25060160 or	NTM-4PDML086 or
	25060225	NTM-4PDML147, Antenna <D>
	25060117 or	NTM-2PDMN051 or
	25060222	NTM-2PDML144,Antenna <P/W>
	Socket	
P201	25050986	NSCT-14P773 <D>
	25050987	NSCT-16P774 <P>
	Plugs	
TP101	25055038	NPLG-2P29
TP102	25055038	NPLG-2P29 <P>

NOTE: <D>:120 V model only
<P>:230 V model only
<W>:Worldwide model only

PRINTED CIRCUIT BOARD VIEW FROM BOTTOM SIDE

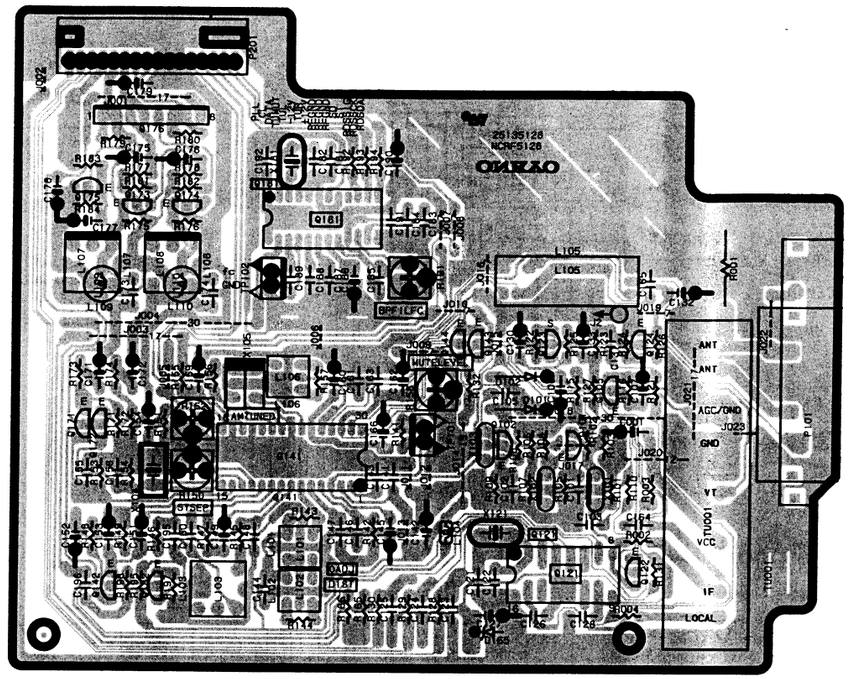

TUNERT CIRCUIT PC BOARD

www.manualscenter.com

BLOCK DIAGRAM

Amplifier section

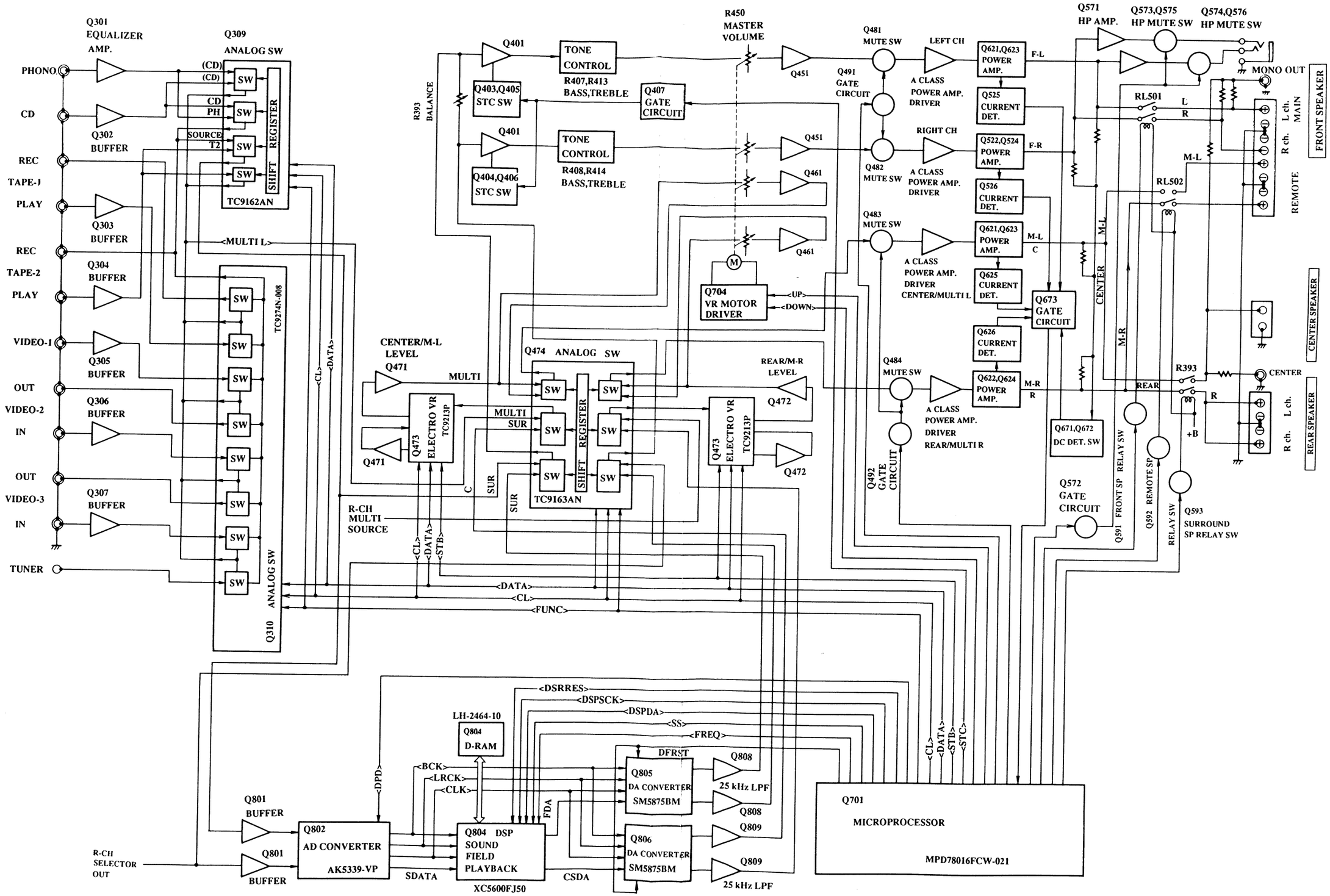

www.manualscenter.com

PACKING VIEW

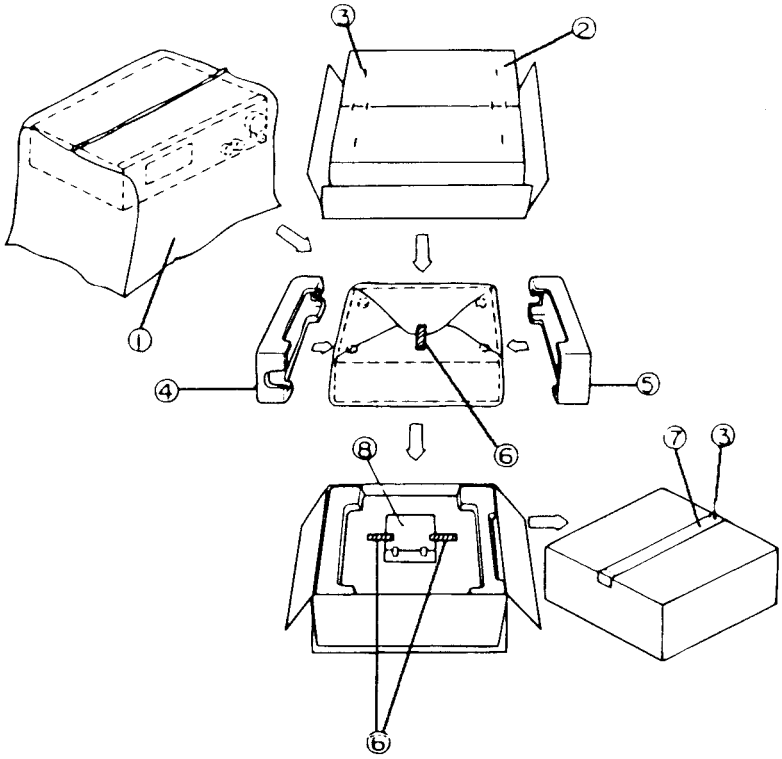

REF.NO.	PART NO.	DESCRIPTION
1	29100034-1Y	Styren bag
2	29052819Y	Carton box <D/W>
	29052820Y	Carton box <P> <B>
	29052823Y	Carton box <P> <S>
3	282301	Staple
4	29091615BY	Pad R
5	29091614CY	Pad L
6	261504	Paper tape
7	29110071	PP tape
8	Accessary bag ass'y	
	29100097-1Y	Styren bag
	24140287AY or	RC-287S, Remote control transmitter
	24140287Y	
	3010054	UM-3, Battery"
	232140	NMA-3057, AM loop antenna
	292111	FM antenna <D>
	292112	FM antenna <P/W>
	29342054Y	Instruction manual
	29342055Y	Instruction manual <P>
	29342056Y	Instruction manual <W>
	29342057Y	Instruction manual <P>
	2010200	Cord RI
	29365019B	Warranty card <N>
	29358002K	Service station list <N>
	29361775Y	Label UPC <N>
	29360778Y	Label FLASH <N>
	25065462	FM antenna adaptor <W>
	25055018	"CV-K-1, Conversion plug <W>"

NOTE: <D>:120 V model only
<P>:230 V model only
<N>:U.S.A. model only
<W>:Worldwide model only
<B>:Black model only
<S>:Silver model only

NOTES

The TX-SV525(B)MPT type (Taiwanese model) is the same as the TX-SV525R(B)MP type (230V model) with the exception of the following sections.

		MPT type		MP type	
REF.NO.	PART NAME	PART NO.	DESCRIPTION	PART NO.	DESCRIPTION
3	Rear panel	27122059Y		27121986Y	
4	Decorative frame	27315253AY		27215256AY	
51	Front panel ass'y	1A559121Y		1A561121Y	
U1	Pc board ass'y	1A559521-1CY	NAAR-5121-1C	1A562521-1AY	NAAR-5121-1A
U4	Pc board ass'y	1A559524-1Y	NADG-5124-1	1A562524-1AY	NADG-5124-1A
U8	Pc board ass'y	1A559528-1CY	NARF-5128-1C	1A562528-1AY	NARF-5128-1A
	Instruction manual	29342056Y		29342055Y	
	Instruction manual	Not used		29342057Y	
	FM antenna adaptor	25065462		Not used	
	Carton box	29052819Y		29052820Y	

The TX-SV525(B)MGK type (Korean model) is the same as the TX-SV525R(B)MP type (230V model) with the exception of the following sections.

		MGK type		MP type	
REF.NO.	PART NAME	PART NO.	DESCRIPTION	PART NO.	DESCRIPTION
3	Rear panel	27122081Y		27121986Y	
4	Decorative frame	27315253AY		27215256AY	
51	Front panel ass'y	1A564121Y		1A561121Y	
F903	Fuse	Not used		252075	2.5A-SE-EAK
P901	Power supply cord	253213WSE	KS-AS	253193HIT	AS-CEE
P904,5	AC outlet	25051266	NSCT-2P1056	Not used	
T901	Power transformer	2301067Y	NPT-1228DG	2301066Y	NPT-1228P
U1	Pc board ass'y	1A559521-1DY	NAAR-5121-1D	1A562521-1AY	NAAR-5121-1A
U4	Pc board ass'y	1A559524-1Y	NADG-5124-1	1A562524-1AY	NADG-5124-1A
U7	Pc board ass'y	1A559527-1DY	NAPS-5127-1D	1A562527-1AY	NAPS-5127-1A
U8	Pc board ass'y	1A559528-1CY	NARF-5128-1C	1A562528-1AY	NARF-5128-1A
	Instruction manual	29355221		29342055Y	
	Instruction manual	Not used.		29342057Y	
	FM antenna adaptor	25065462		Not used	
	Carton box	29052819Y		29052820Y	

ONKYO CORPORATION

Sales Planning & Promotion Dept. : 2-1, Nisshin-cho, Neyagawa-shi, OSAKA 572, JAPAN
Tel: 0720-31-8111 Fax: 0720-33-5222

ONKYO U.S.A CORPORATION
200 Williams Drive, Ramsey, N.J. 07446, U.S.A.
Tel: 201-825-7950 Fax: 201-825-8150

ONKYO DEUTSCHLAND GMBH ELECTRONICS
Industriestrasse 18-20, 82110 Germering, GERMANY
Tel: 089 84 20 Fax: 089 84 93 226

ONKYO FRANCE
Immeuble Le Diamant, Domaine Technologique de Saclay, 4 Rue Rene Razel,
91892 SACLAY, FRANCE Tel: (1) 69 33 1400 Fax: (1) 69 41 35 84

NS503 Part No. 0M3499 Printed in Japan

www.manualscenter.com