PIONEER
The future of sound and vision.

Service Manual

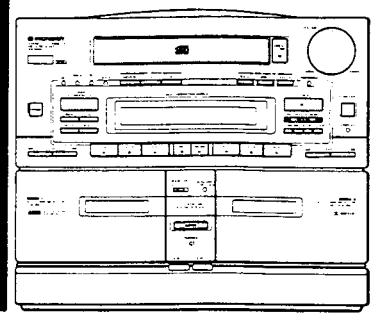

ORDER NO.
ARP1996

STEREO CD CASSETTE DECK RECEIVER

XR-P500

XR – P500 HAS FOLLOWING VERSIONS :

Type	Power requirement	Export destination
HE	AC220V, 240V (switchable) *	European continent
HB	AC220V, 240V (switchable) *	United Kingdom
HEWZI	AC220V, 240V (switchable) *	European continent
SD	AC110V, 120 – 127V, 220V, 240V (switchable)	Kingdom of Saudi Arabia and General market
YPW	AC240V only	Australia
KUC	AC120V only	U.S.A. and Canada

* Change the position of the jumper wire and fuse in transformer assembly.

●This manual is applicable to the HE, HB, HEWZI, SD and YPW types.
●As to the HB, YPW, SD and HEWZI types, refer to pages 144 – 146.
●As to the other type, refer to applicable service manual.
●Ce manuel pour le service comprend les explications de réglage en français.
●Este manual de servicio trata del método ajuste escrito en español.

CONTENTS

1. SAFETY INFORMATION 2
2. DISASSEMBLY 3
3. BOARD DIAGNOSTIC METHOD 6
4. EXPLODED VIEWS, PACKING AND PARTS LIST 12
5. OVER ALL SCHEMATIC DIAGRAM 29
6. SCHEMATIC DIAGRAMS AND P.C. BOARD PATTERNS 33
7. P.C.B's PARTS LIST 78
8. ADJUSTMENTS 85
8. RÉGLAGES 100
8. AJUSTES 115
9. IC INFORMATION 130
10. CIRCUIT OUTLINE 138
11. LINE VOLTAGE SELECTION FOR HE, HB AND HEWZI TYPES 143
12. FOR XR – P500/HB, HEWZI, YPW AND SD TYPES 144
13. PANEL FACILITIES 147
14. SPECIFICATIONS 152

PIONEER ELECTRONIC CORPORATION 4-1, Meguro 1-Chome, Meguro-ku, Tokyo 153, Japan
PIONEER ELECTRONICS SERVICE INC. P.O. Box 1760, Long Beach, California 90801 U.S.A.
PIONEER ELECTRONICS OF CANADA, INC. 505 Cochrane Drive, Markham, Ontario L3R 8E3 Canada
PIONEER ELECTRONIC [EUROPE] N.V. Keetberglaan 1, 2740 Beveren, Belgium
PIONEER ELECTRONICS AUSTRALIA PTY. LTD. 178-184 Boundary Road, Braeside, Victoria 3195, Australia TEL: [03] 580-991

© PIONEER ELECTRONIC CORPORATION 1990

SO APR. 1990 Printed in Japan

www.manualscenter.com

1. SAFETY INFORMATION

(FOR EUROPEAN MODEL ONLY)

VARO!
AVATTAESSA JA SUOJALUKITUS OHITETTAESSA OLET ALTTIINA NÄKYMÄTTÖMÄLLE LASERSÄTEILYLLE. ÄLÄ KATSO SÄTEESEEN.

ADVERSEL:
USYNLIG LASERSTRÅLING VED ÅBNING NÅR SIKKERHEDSAFBRYDERE ER UDE AF FUNKTION UNDGÅ UDSAETTELSE FOR STRÅLING.

VARNING!
OSYNLIG LASERSTRÅLNING NÄR DENNA DEL ÄR ÖPPNAD OCH SPÄRREN ÄR URKOPPLAD. BETRAKTA EJ STRÅLEN.

LASER
Kuva 1
Lasersateilyn
varoitusmerkki

WARNING!
DEVICE INCLUDES LASER DIODE WHICH EMITS INVISIBLE INFRARED RADIATION WHICH IS DANGEROUS TO EYES. THERE IS A WARNING SIGN ACCORDING TO PICTURE 1 INSIDE THE DEVICE CLOSE TO THE LASER DIODE.

IMPORTANT
THIS PIONEER APPARATUS CONTAINS LASER OF HIGHER CLASS THAN 1. SERVICING OPERATION OF THE APPARATUS SHOULD BE DONE BY A SPECIALLY INSTRUCTED PERSON.

LASER DIODE CHARACTERISTICS
MAXIMUM OUTPUT POWER: 5 mw
WAVELENGTH: 780-785 nm

LASER
Picture 1
Warning sign for
laser radiation

LABEL CHECK

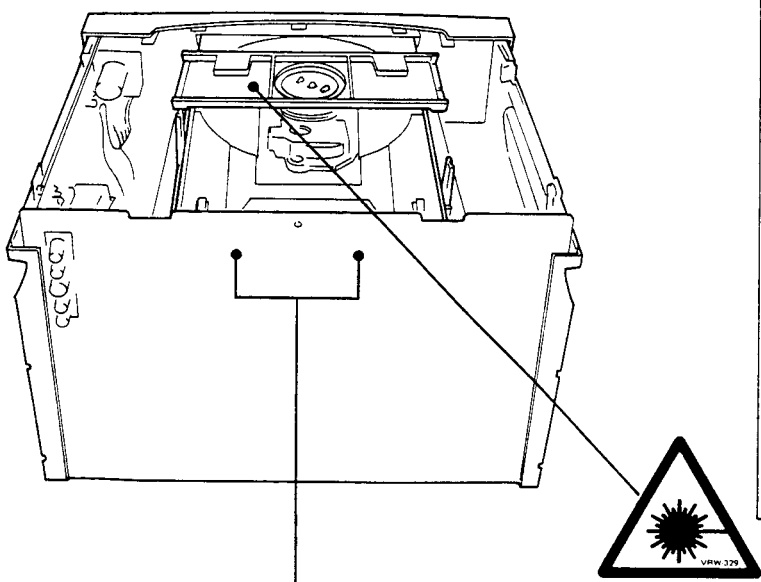

Additional Laser Caution

1. Laser Interlock Mechanism
   The position of the switch (S601) for detecting loading completion is detected by the system microprocessor, and the design prevents laser diode oscillation when the switch (S601) is not in $\overline{\text{CLMP}}$ terminal side (when the mechanism is not clamped and $\overline{\text{CLMP}}$ signal is high level).
   Thus, the interlock will no longer function if the switch (S601) is deliberately set to $\overline{\text{CLMP}}$ terminal side (if $\overline{\text{CLMP}}$ signal is low level).
   In the test mode*, the interlock mechanism will not function.
   Laser diode oscillation will continue if pin 4, 5, or 29 of CXA1081S (ICI) is connected to ground or the terminals of Q1 are shorted to each other (fault condition).
2. When the cover is opened, close viewing of the objective lens with the naked eye will cause exposure to a Class 1 or higher laser beam.

* Refer to page 91.

HB, HE, HEWZI, SD and YPW types

HB type

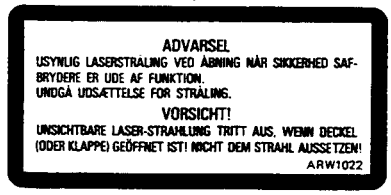

HE, HEWZI, SD and YPW types

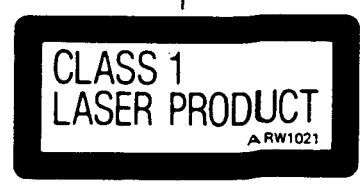

HB, HE, HEWZI, SD and YPW types

2. DISASSEMBLY

● Removal of CD Player Section

1. Remove the top panel Ⓐ (this should be pulled out by lifting its rear side) and the side panels Ⓑ and Ⓒ (L and R).
2. Remove the tray while pushing the claw of the tray from the opening sections Ⓓ1 and Ⓓ2 after moving it to OPEN position. (Refer to Note 1 for the method of opening the tray manually.)
3. Remove four setscrews of the CD player section and two setscrews of the ground lead to take the CD player section out.
   • The CD player can be dismounted in its entirety by removing CN4 and CN5.

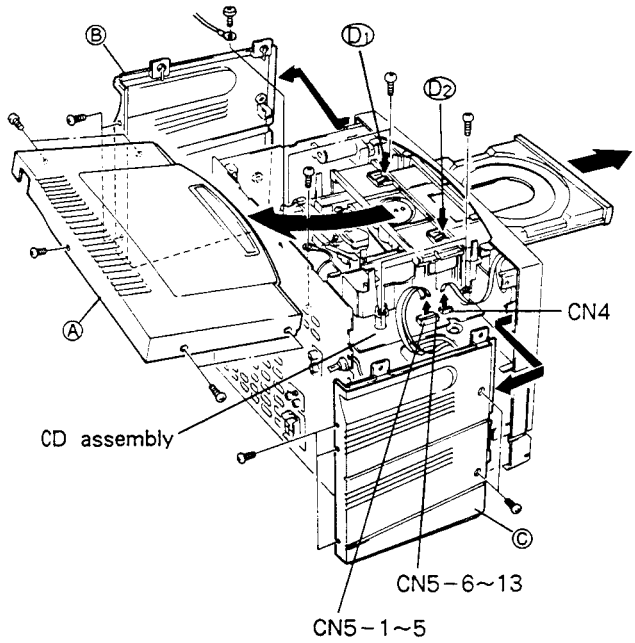

Fig. 1.

● Removal of Servo Mechanism Assembly

1. Remove the tray. (Refer to Step 2 of Removal of CD Player Section.)
2. Remove setscrew Ⓩ1 to Ⓩ4 (4 pieces) securing the servo mechanism assembly in place with it held down (in the tray open position). (Fig. 2.)
3. Move the rack toward the front by hand and put the servo mechanism assembly in the lifted state.

Note) When moving the rack, it is sometimes probable that the rack cannot be moved if the gear A and the gear section of the rack are not properly engaged with each other at the point marked ⊗. In such a case, turn the gear B by hand from the side and align the gear A with the gear section of the rack at the point ⊗ to ensure proper engagement. (Fig. 2.)

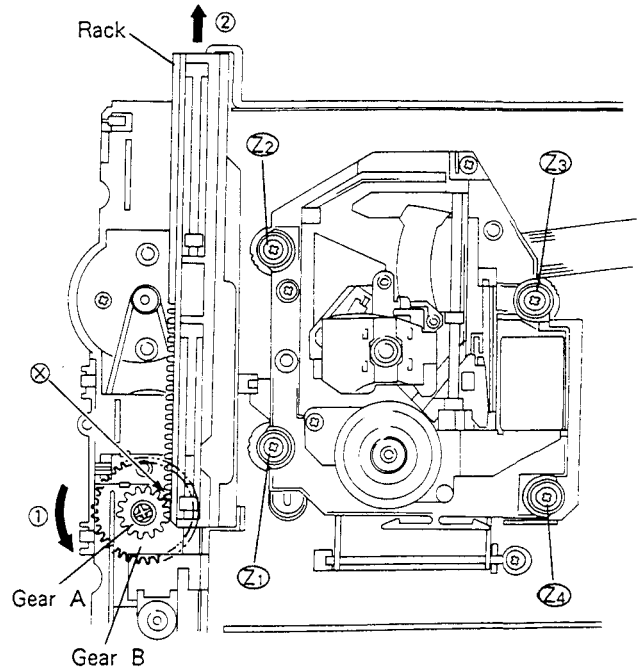

Fig. 2.

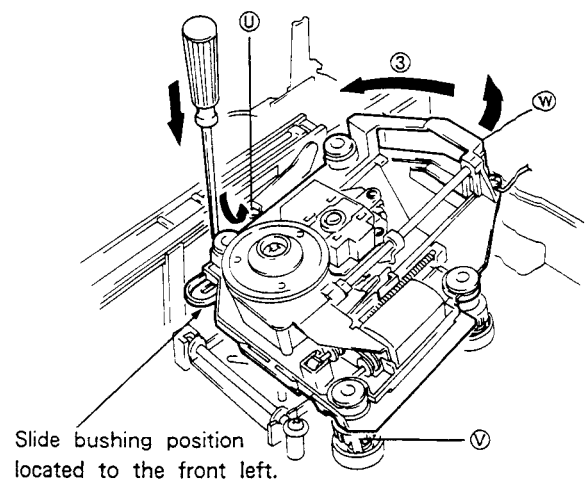

Fig. 3.

4. Push the slide bushing located to the front left using a slotted screwdriver or the like. (See Fig. 3.)
5. Lift the rear section marked Ⓦ of the servo mechanism assembly. (Fig. 3)
6. Turn the servo mechanism assembly counter-clockwise (in the direction of arrow ③) with point Ⓥ of the slide bushing as a fulcrum to unlock the hooked section marked Ⓤ of the servo mechanism assembly.

● Removal of Swing Lever

1. Move the rack by hand to bring it to the tilted section of the groove in which the Ⓢ section of the swing lever is seated.
2. Remove the screw Ⓡ which holds the shaft in place.
3. Lift the right side (the screw Ⓡ side) of the shaft a little and extract it in the direction of arrow ②.

● Removal of Slide Bushing

1. Push the slide bushing from three directions to compress it as shown in Fig. 4.
2. Remove the slide bushing by turning it in the direction of ③.

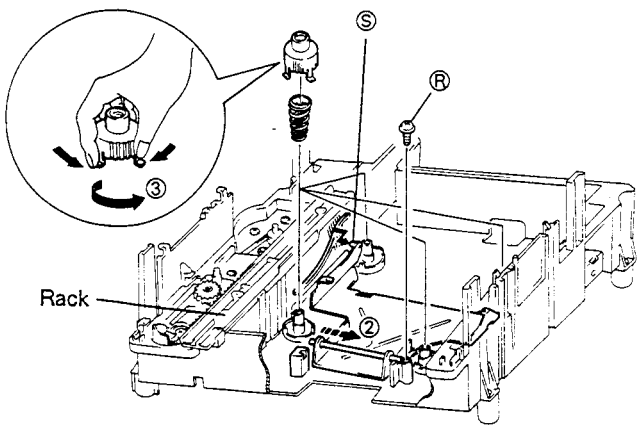

Fig. 4.

● Removal of AF Assembly

1. Remove the CD player section.
2. Remove the rear panel Ⓔ
3. Remove the shield plate Ⓕ.
4. Remove nylon rivet Ⓖ of the AF assembly front side (at two points). (See Fig. 5)
5. Remove connectors CN22 and CN7 connecting the TX. SOUND CTRL assembly.

Note) Care should be taken to avoid applying stress to chip parts due to the warped TX. SOUND CTRL assembly.

Note1) Method of opening the tray manually.

- Turn the gear B of Fig. 2 in the direction of arrow ① by hand.
- When the servo mechanism assembly began to go down to move the tray to the OPEN position, the tray should be moved to the OPEN position by hand.

Note2) To mount the tray, proceed only with the servo mechanism assembly in the fully lowered state (that is, with the rack moved to the rearmost position). Otherwise, the up and down motions of the servo mechanism assembly cease to be synchronized with each other.

When the tray is mounted in by mistake, attempt to mount it in the following manner once again.

1. Remove the tray according to Step 2 of "Removal of CD Player".
2. Move the rack fully toward the back (in the direction of arrow ② shown in Fig. 2).
3. Mount the tray.

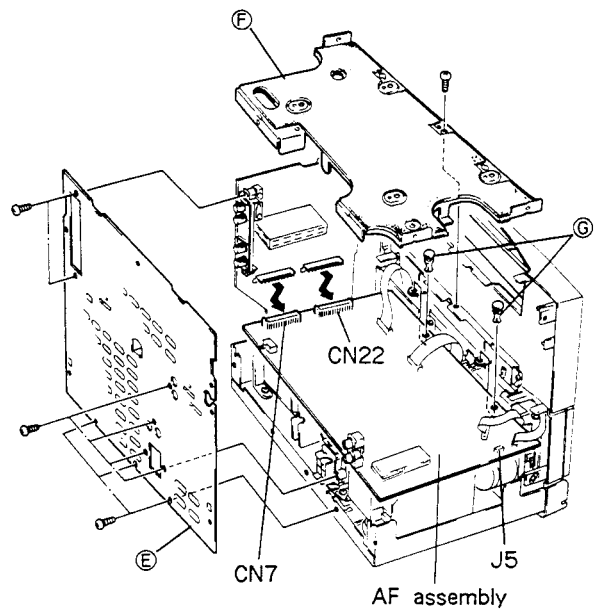

Fig. 5.

www.manualscenter.com

● Removal of TX. SOUND CTRL Assembly

1. Remove the top panel, side panels (L and R), and rear panel.
2. Remove the volume control knob Ⓗ and hexagonal nut Ⓘ.
3. Remove CN6 and CN7 connecting the POWER assembly to CN11, CN12, and AF assembly. (Care should be taken to avoid applying the stress to chip parts due to the warped TX. SOUND CTRL assembly.)
4. Remove the volume control shaft in an extracting manner while tilting the front panel toward the front.

● Removal of Cassette Mechanism Assembly

1. Remove the CD player section, AF assembly, and TX. SOUND CTRL assembly.
2. Remove the front panel from the chassis.
3. Remove cassette setscrews (four pieces each) to dismount the cassette mechanism.

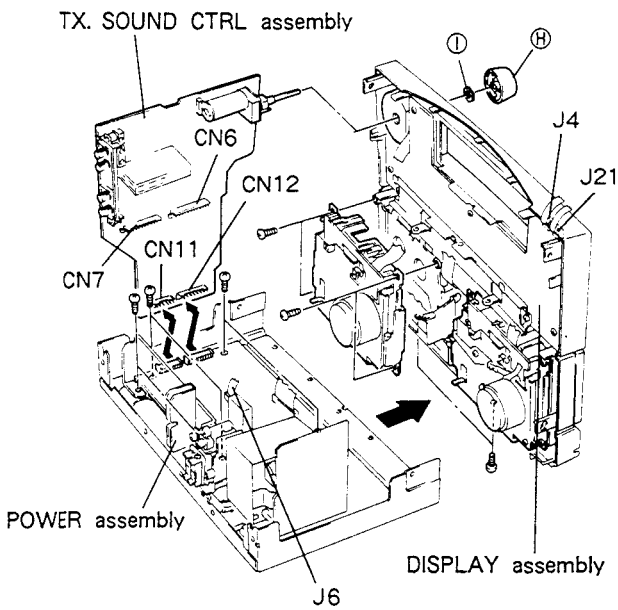

Fig. 6.

3. BOARD DIAGNOSTIC METHOD

3.1 FOR BOARD EXTENSION CORD

The following cords are necessary to repair this product.

Jig. No.	Name	Use (Connectors/Jumper No. are shown in the parentheses.)
GGF1049	4P extension cord	CD Assembly (CN4) ⟷ DISPLAY Assembly (J4)
GGF1050	8P+5P extension cord	CD Assembly (CN5-1 to 5), (CN5-6 to 13) ⟷ POWER Assembly (J6), AF Assembly (J5)
GGF1051	9P extension cord	TX. SOUND Control Assembly (CN11) ⟷ POWER Assembly (CN11)
GGF1052	12P extension cord	TX. SOUND Control Assembly (CN12) ⟷ POWER Assembly (CN12)
GGF1053	15P extension cord	TX. SOUND Control Assembly (CN7) ⟷ AF Assembly (CN7)
GGF1054	14P extension cord	TX. SOUND Control Assembly (CN6) ⟷ AF Assembly (CN22)

Notes :

- Refer to Fig. 1, Fig. 5 and Fig. 6 of "DISASSEMBLY" for the locations of above CN (connector) and J (flat cable).
- Pages 6 to 13 describe the functions of the CN and J terminals for each board.
- When the rear panel or the shield plate is removed, the cassette mechanism chassis ground is disconnected. If the operation check is carried out in this condition, the playback signal may be disturbed by noise.
- When connecting CN6 and CN7 during reassembling, support the area around CN6 and CN7 by hand to avoid bending of the TX. SOUND CTRL assembly which may stress the chip section.
  Be also to avoid bending the board and stressing the chip section, when mounting or removing the AF assembly and the DISPLAY assembly.
- With the CD player section removed, it is possible to check other parts. In this case the display does not show correct indications.
  Be careful not to short the flat cable ends connected to CN4 and CN5 of the CD player section.

3.2 CONNECTING PINS FUNCTION TABLE

POWER Assembly (AWZ2880 : for HE, HB, SD and YPW types) (AWZ2890 : for HEWZI type)

No.	Name	Function
CN11−1	+12V	Signal system +12V power supply output
2	NC	Not used
3	−12	Signal system −12V power supply output
4	GND	Chassis GND
5	TX GND	Tuner GND
6	R	Rch power amplifier input
7	GND	Signal GND
8	L	Lch power amplifier input
9	SP B	Not used
CN12−1	SP A	Relay control input for speaker ("L" when standby and using a headphone.)
2	M +12	Motor system +12V power supply output
3	M GND	Motor GND
4	M −12	Motor system −12V power supply output
5	D GND	Digital GND
6	GND	Signal GND
7	+5.6	Microcomputer +5.6V power supply output
8	−30	−30V power supply output for FL
9	STAND BY	"H" when standby
10	STAND BY	"H" when standby
11	FL AC1	AC power supply output for FL
12	FL AC2	AC power supply output for FL
J6−1	+5	+5V power supply output for CD
2	−5	−5V power supply output for CD
3	GND	GND
4	μ +5	+5V power supply output for microprocessor
5	M +12	Motor system +12V power supply output
6	M −12	Motor system −12V power supply output
7	GND	Motor system GND
8	GND	GND

AF Assembly (AWZ2881 : for HE, HB and YPW types) (AWZ2891 : for HEWZI type) (AWZ3013 : for SD type)

No.	Name	Function	
CN7−1	TX R	Tuner Rch input	
2	TX GND	Tuner GND	
3	TX L	Tuner Lch input	
4	GND	Chassis GND	
5	R OUT	Rch output	
6	GND	Signal GND	
7	L OUT	Lch output	
8	−12	Signal system −12V power supply (−12V±0.5V) reception	
9	+5	Signal system +5V power supply (+5V±0.5V) reception	
10	+12	Signal system +12V power supply (+12V±0.5V) reception	
11	SP B	Not used	
12	SP A	Relay control output for speaker ("L" when standby and using a headphone.)	
13	HP L	Headphone Lch input	
14	HP GND	Headphone GND	
15	HP R	Headphone Rch input	
CN16−1	DOLBY ON/OFF	Dolby ON/OFF switch input ("L" when Dolby ON.)	
2	L	Headphone Lch output	
3	GND	Headphone GND	
4	R	Headphone Rch output	
5	CTRL	Headphone switch input ("H" when inserting to PHONE.)	
6	+5	Signal system +5V output	
7	DISCO IND	Not used	
8	FADE IND	ASES IND control ("L" when IND ON.)	
9	KO2	Key matrix output	For deck amplifier microprocessor IC312 (PDE034−A)
10	KI3	Key matrix input	
11	KI2	Key matrix input	
12	KI1	Key matrix input	
CN17−1	SABO A	Mechanism I motor speed adjustment	
2	SABO B	Mechanism I motor speed adjustment	
3	+12	Mechanism I motor power supply (12V output when motor ON.)	
4	REEL	Reel pulse input from mechanism I	
5	GND	Motor GND	
6	CrO_2	KI2 (key matrix input) chrome detection	
7	MODE	KI1 (key matrix input) PLAY mode switch	
8	SOL B	Solenoid B drive	
9	COM	KO0 output	
10	SOL A	Solenoid A drive	
11	HALF	KI0 (key matrix input) half detection	

No.	Name	Function	
CN18−1	REC F	KI3 (key matrix input) FWD, REC claw detection	
2	SABO A	Mechanism II motor speed adjustment	
3	SABO B	Mechanism II motor speed adjustment	
4	+12	Mechanism II motor power supply	
5	REEL	Reel pulse input from mechanism II	
6	GND	Motor GND	
7	CrO_2	KI2 (key matrix input) chrome detection	
8	MODE	KI1 (key matrix input) PLAY mode switch	
9	SOL B	Solenoid B drive	
10	COM	KO1 output	
11	SOL A	Solenoid A drive	
12	HALF	KI0 (key matrix input) half detection	
13	NC		
14	REC R	KI4 (key matrix input) REV, REC claw detection	
CN19−1	I HEAD Lch	Deck I Lch input	
2	GND	Deck I signal GND	
3	I HEAD Rch	Deck II Rch input	
CN20−1	II HEAD Rch	Deck II Rch input	
2	II HEAD Lch	Deck II Lch input	
3	GND	Deck II signal GND	
4	GND	Deck II bias GND	
5	EH	Erase bias output	
CN21−1	AC	AC detection signal input (Refer to Note 1.)	
2	+5.6	Microprocessor system +5.6 output	
3	D GND	Digital GND	
4	S CLK	Serial clock	Tuner microprocessor IC901 (PD4240−A) Deck amplifier microprocessor IC312 (PDE034−A)
5	S DATA 1	Serial data	
6	S DATA 2	Serial data	
7	MUTE IN	Mute control signal input (PDE034−A)	
8	RESET	Reset pulse input	

Note 1 :

The frequency is the same as the power supply frequency.

www.manualscenter.com

No.	Name	Function
CN22−1	P. BASS 2	Low frequency output signal mute control ("L" output when P. BASS or EXCITE.)
2	EXCITE	High frequency output signal addition control ("L" output when EXCITE.)
3	BGM	High frequency output signal subtraction control ("L" output when BGM.)
4	P. BASS 1	Low frequency output signal level control ("L" output when P. BASS or EXCITE.)
5	M +12	Motor system +12V power supply (+12V±0.5V) reception
6	M GND	Motor GND
7	M −12	Motor system −12V power supply (−12V±0.5V) reception
8	D GND	Digital GND
9	+5.6	Microprocessor system (+5.6±0.5V) reception
10	VOL	Signal input for VR position detection (0 to 0.7V) input
11	MUTE	Signal mute control ("H" output when signal mute.)
12	STAND BY	Standby control
13	VR DOWN	VR down control ("H" output when VR down.)
14	VR UP	VR up control ("H" output when VR up.)
J5−1	CD L	CD Lch input
2	CD GND	CD GND
3	CD R	CD Rch input
4	RESET	Reset pulse output
5	TRCH	Pulse input between CD tracks

Display Assembly

No.	Name	Function	
J4−1	REQ	Serial data transfer request input for display	For tuner microprocessor IC901 (PD4240−A), CD microprocessor IC6 (PD4257)
2	CD CLK	Serial clock input for display	
3	CD DATA	Serial data input for display	
4	SR OUT	SR data output for CD control	
J10−1	STEREO	Stereo detection signal input ("L" when stereo.)	For tuner microprocessor IC901 (PD4240−A)
2	DUAL	Not used	
3	PLL CLK	CLK output for PLL IC	
4	PLL DATA	DATA output for PLL IC	
5	PLL CE	CE output for PLL IC	
6	FM MONO	FM MONO control output ("H" when FM MONO.)	
7	TV MONO	Not used	
8	TUNE	Tuned signal input ("L" when tuned.)	
9	LOCAL	Not used	
10	VFDP (−30V)	−30V power supply input for FL (−30V±1V) reception	
11	FL AC2	AC power supply reception for FL	+5.2V±0.2V (AC) input, 50 Hz or 60 Hz
12	FL AC1	AC power supply reception for FL	
J21−1	AC	AC detection signal output, 50 Hz ro 60 Hz rectangular wave output (Refer to Note 1 on page 8.)	
2	μ +5.6	Microprocessor system +5.6 power supply reception	
3	D GND	Digital GND	For tuner microprocessor IC901 (PD4240−A), deck amplifier microprocessor IC312 (PDE034−A)
4	SCLK	Serial clock output	
5	S DATA 1	Serial data	
6	S DATA 2	Serial data	
7	MUTE	Mute control signal	
8	RESET	Reset pulse output	

Deck Switch Assembly

No.	Name	Function	
J16−1	DOLBY ON/OFF	Dolby ON/OFF switch output ("L" output when Dolby ON.)	
2	PHONE L	Headphone Lch output	
3	PHONE GND	Headphone GND	
4	PHONE R	Headphone Rch output	
5	CTRL (PHONE)	Headphone switch ("L" when not inserting headphone.)	
6	+5	Microprocessor system +5V power supply, applies +5V±0.5V	
7	DISCO IND	Not used	
8	FADE IND	ASES IND control, "L" when IND ON.	
9	KO2	Key matrix output	For deck amplifier microprocessor IC312 (PDE034−A)
10	KI3	Key matrix input	
11	KI2	Key matrix input	
12	KI1	Key matrix input	

TX. SOUND Control Assembly (AWM1248 : for HE and HB types) (AWM1255 : for SD type) (AWM1256 : for HEWZI type) (AWM1259 : for YPW type)

No.	Name	Function	
CN7−1	TX R	Tuner Rch output	
2	TX GND	Tuner GND	
3	TX L	Tuner Lch output	
4	GND	Chassis GND	
5	R OUT	Rch input	
6	GND	Signal GND	
7	L OUT	Lch input	
8	−12	Signal system −12V power supply output	
9	+5	Signal system +5V power supply output	
10	+12	Signal system +12V power supply output	
11	SP B	Not used	
12	SP A	Relay control input for speaker ("L" when standby and using headphone.)	
13	HP L	Headphone Lch output	
14	HP GND	Headphone GND	
15	HP R	Headphone Rch output	
CN10−1	STEREO	Stereo signal output ("L" when stereo.)	For tuner microprocessor IC901 (PD4240−A)
2	9K/10K	9K/10K switching signal output ("L" when 9K.)	
3	CLK	CLK for PLL IC	
4	DATA	DATA for PLL IC	
5	CE	CE for PLL IC	
6	FM MONO	FM MONO control ("H" when FM MONO.)	
7	TV MONO	Not used	
8	TUNED	Tuner signal output ("L" when tuned.)	
9	LOCAL	Not used	
10	−30	−30V power supply output for FL	
11	FL AC2	AC power supply output for FL	
12	FL AC1	AC power supply output for FL	
CN11−1	+12	Signal system +12V power supply (+12V±0.5V) reception	
2	V_T	Not used	
3	−12	Signal system −12V power supply (−12V±0.5V) reception	
4	GND	Chassis GND	
5	TX GND	Tuner GND	
6	R	Rch flat amplifier	
7	GND	Signal GND	
8	L	Lch flat amplifier	
9	SP B	Not used	

No.	Name	Function
CN12-1	SP A	Relay control output for speaker
2	M +12	Motor system +12V power supply (+12V±0.5V) reception
3	M GND	Motor GND
4	M -12	Motor system -12V power supply reception
5	D GND	Digital GND
6	GND	Signal GND
7	+5.6	Microprocessor system +5.6V power supply reception
8	-30	-30V power supply reception for FL
9	NC	Not used
10	STAND BY	Standby control
11	FL AC1	AC power supply reception for FL
12	FL AC2	AC power supply reception for FL
CN6-1	P. BASS 2	Low frequency output signal mute control ("L" when P. BASS or EXCITE.)
2	EXCITE	High frequency output signal addition control ("L" when
3	BGM	High frequency output signal subtraction control ("L" when BGM.)
4	P. BASS 1	Low frequency output signal level control ("L" when P. BASS or EXCITE.)
5	M +12	Motor system +12V power supply output
6	M GND	Motor GND
7	M -12	Motor system -12V power supply output
8	D GND	Digital GND
9	+5.6	Microprocessor system +5.6V power supply
10	VOL	Signal output for VR position detection
11	MUTE	Signal mute control ("H" when signal mute.)
12	STAND BY	Standby control
13	VR DOWN	VR down control ("H" when VR down.)
14	VR UP	VR up control ("H" when VR up.)

www.manualscenter.com

4. EXPLODED VIEWS, PACKING AND PARTS LIST

NOTES :

- Parts without part number cannot be supplied.
- The ⚠ mark found on some component parts indicates the impotance of the safety factor of the part. Therefore, when replacing, be sure to use parts of identical designation.
- Parts marked by "⊙" are not always kept in stock. Their delivery time may be longer than usual or they may be unavailable.

Parts List of Main Unit and Packing for HE type

Mark	No.	Part No.	Description
	1		.....
⚠	2	ADG1019	Power cord
	3	ADH1005	FM simple antenna
	4	AEB1111	Stopper
	5	AEC−882	AC cord stopper
	6		Nylon rivet
	7		UM−4 dry cell
	8	AHA1321	Pad (L)
	9	AHA1322	Pad (R)
	10	AHD1821	Packing case
	11	AHG1172	Packing sheet
	12	AME1051	Side panel (L)
	13	AME1052	Side panel (R)
	14	AME1069	Top panel
	15		PCB mold
	16		Chassis
	17		Rear panel
	18		Pack mounting bracket
	19		Heat sink
	20		Shield plate
	21		Heat protector
	22	ARC1208	Instruction manual
⊙	23	AWM1248	TX.SOUND control assembly
⊙	24	AWY1065	Mechanism unit (PB)
⊙	25	AWY1066	Mechanism unit (R/PB)
	26	AXD1138	Remote controller
	27	BBZ30P080FZK	Screw
	28		CD player
	29	VBZ30P060FMC	Screw
	30	VBZ30P160FMC	Screw
⚠	31	AEK−031	FU201 Fuse
⚠	32	AEK−405	FU202, 203 Fuses
	33	ATB1006	L loop antenna assembly
⚠	34	ATS1256	T power supply transformer
	35	AZN2006	Battery lid
	36	BPZ30P100FZK	Screw
⊙	37	AWZ2881	AF assembly
⊙	38	AWZ2880	Power assembly
	39		Transformer assembly
	40		.....
	41		.....
	42	BBZ30P180FMC	Screw
	43		Ground lead wire
	44	AAK1867	CD ornamental plate
	45	ARE1160	Instruction manual
	46	ARM1003	Caution card

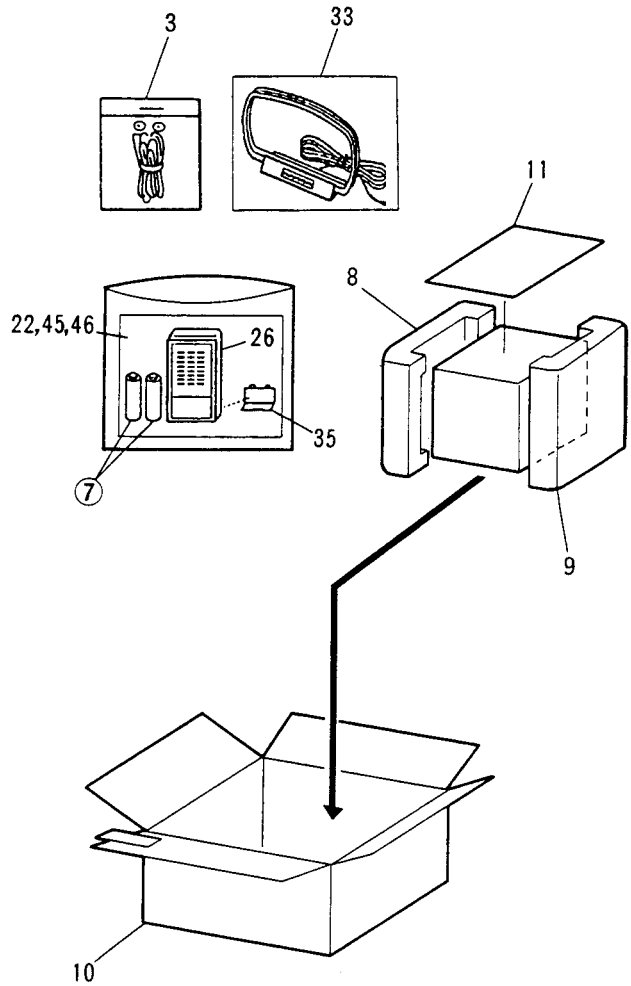

4.1 MAIN UNIT

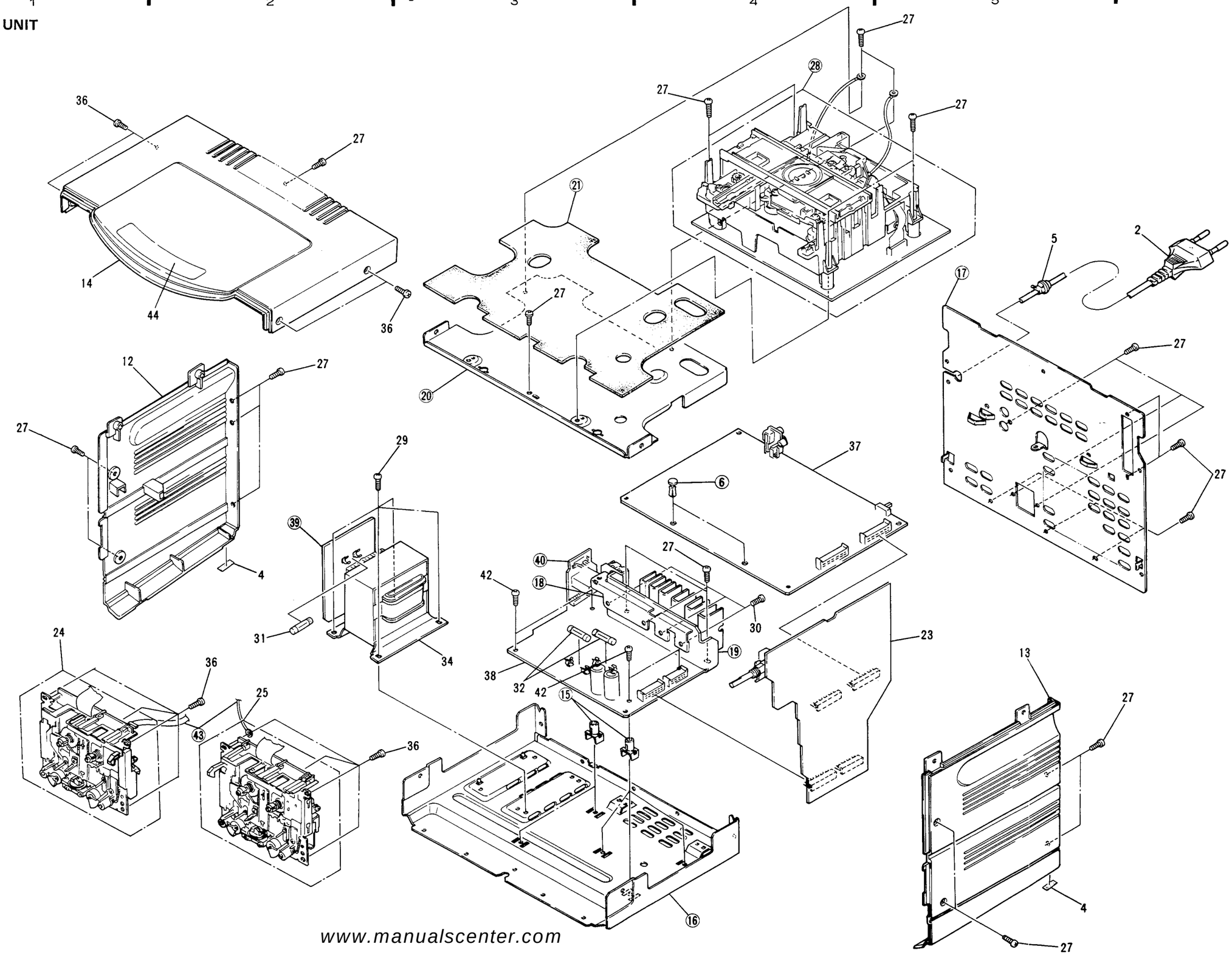

www.manualscenter.com

4.2 FRONT PANEL SECTION

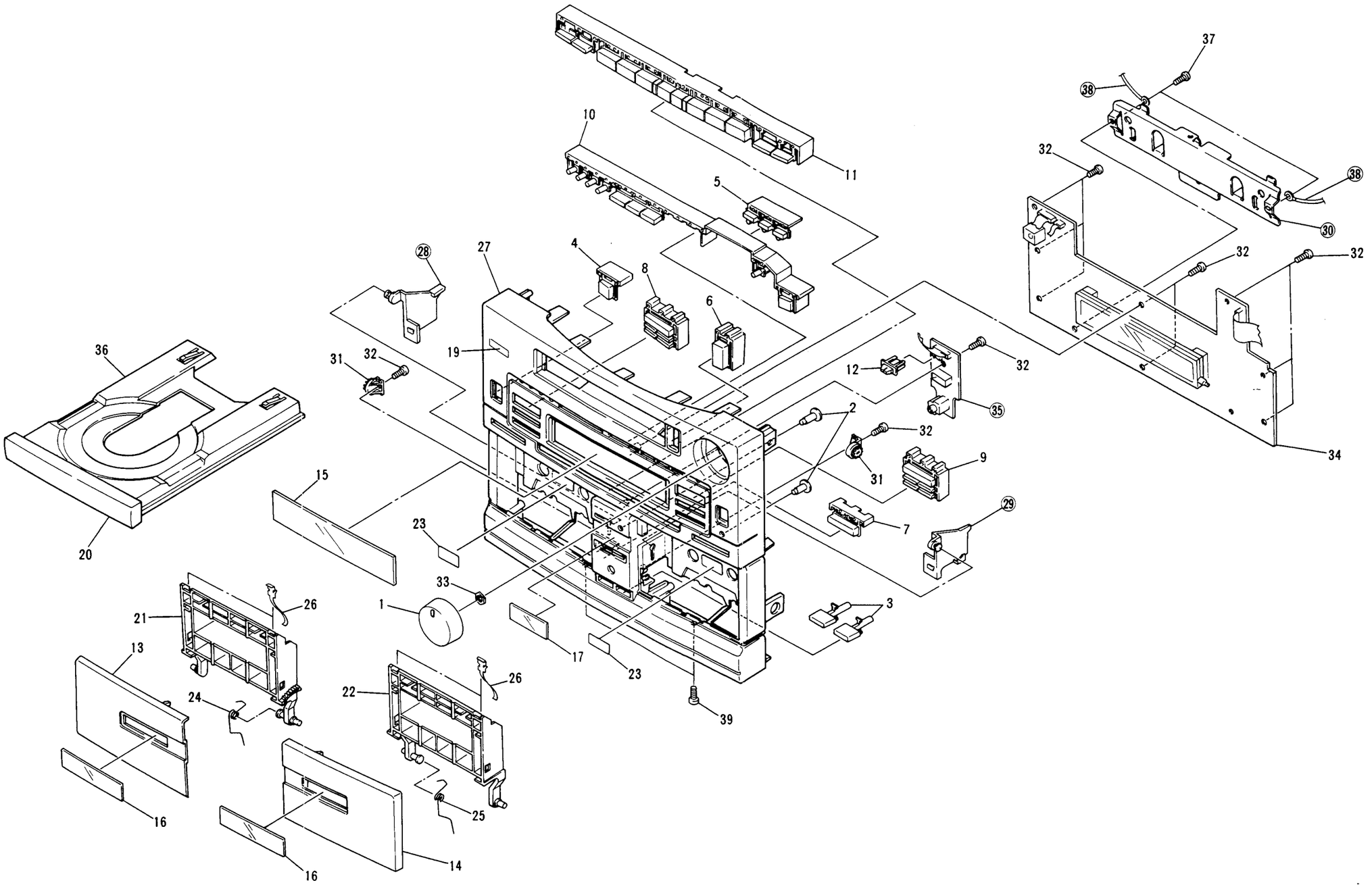

www.manualscenter.com

Parts List of Front Panel Section for HE type

Mark	No.	Part No.	Description
	1	AAB1151	Volume knob
	2	AAD1398	Tact knob
	3	AAD1701	Eject button
	4	AAD1702	Power button
	5	AAD1767	S.C. button
	6	AAD1704	O/C button
	7	AAD1768	ASES button
	8	AAD1820	Tuner button
	9	AAD1707	CD button
	10	AAD1708	Timer button
	11	AAD1709	Deck button
	12	AAE1127	Slide knob
	13	AAK1861	Cassette panel (L)
	14	AAK1862	Cassette panel (R)
	15	AAK1863	Amplifier ornamental plate
	16	AAK1864	Door ornamental plate
	17	AAK1922	Deck ornamental plate
	18		.....
	19	AAK1868	Remote control filter
	20	AAN1174	Tray cap
	21	AAN1175	Half pocket (L)
	22	AAN1176	Half pocket (R)
	23	AAX1301	Fluorescent sheet
	24	ABH1060	Door spring (L)
	25	ABH1061	Door spring (R)
	26	ABK1011	Keep plate
	27	AMB1632	Front panel
	28		Eject lever (L)
	29		Eject lever (R)
	30		Board mounting bracket
	31	AXA1008	Damper assembly
	32	BPZ26P080FMC	Screw
	33	NK90FUC	Nut
⊙	34	AWZ2883	Display assembly
	35		Deck switch assembly
	36	PNW1682	Tray
	37	BPZ30P100FZK	Screw
	38		Ground lead wire
	39	BBZ30P080FZK	Screw

4.3 Mechanism Unit I (AWY1065)

Mark	No.	Part No.	Description
	1	AZE1018	Hall IC
	2	AZX1019	Motor
	3	AZS1054	Leaf switch (Mode)
	4	AZS1034	Leaf switch
	5	AZN1286	Drive arm assembly
	6	AZN1287	FM assembly A
	7	AZN1288	Cam gear
	8	AZN1289	Reel claw
	9	AZN1971	FR arm
	10	AZN1972	Pinch roller L assembly
	11	AZN1973	Pinch roller R assembly
	12	ANZ1293	Gear
	13	AZN1294	H gear
	14	AZN1793	Cue arm
	15	AZB1079	Screw
	16	AZB1080	Screw
	17	AZN1984	Collar
	18	AZN1297	Motor pulley
	19	AZN1298	Flat belt
	20	AZN1299	Tension spring
	21	AZN1300	FR lever spring
	22	AZN1301	FWF spring
	23	AZN1302	FWR spring
	24	AZN1303	Pressure spring
	25		.....
	26	AZN1305	Cable holder
	27	AZN1306	Tension spring
	28	AZN1307	Tension spring
	29	AZN1308	Tension spring
	30	AZN1309	Tension spring
	31	AZN1310	Tension spring
	32	AZN1311	Tension coil spring
	33	AZN1312	Spring
	34	AZN1313	Spring
	35	AZN1314	Spring
	36	AZN1315	Spring
	37	AZB1081	Step screw
	38	AZN1316	Nylon band
	39	AZN1996	PC board
	40		Jumper wire
	41		Head lead wire
	42		Lead wire
	43		Wire
	44		.....
	45		Mechanism board caulking assembly
	46	AZN1319	R reel assembly
	47	AZN1320	F reel assembly
	48	AZN1321	Reverse arm caulking assembly
	49		FR lever assembly
	50	AZN1975	PLAY lever caulking assembly
	51	AZN1976	Gear arm R
	52	AZN1977	Gear arm L
	53	AZN1326	Head lever caulking assembly
	54	AZN1327	FW assembly
	55		Head board
	56		Flywheel receiving plate
	57	AZN1328	Azimuth plate
	58		Switch arm
	59	AZN1988	Arm eject L
	60	AZN1989	Arm eject R
	61	AZN1330	Head arm
	62	AZN1331	Azimuth spring
	63	AZN1332	Cassette stopper
	64	AZN1978	Trigger arm
	65	AZN1334	Head frame
	66	AZN1335	Cassette guide L
	67	AZN1336	Cassette guide R
	68	AZN1337	Cassette guide
	69	AZN1338	Cam gear
	70	AZN1994	Head holder
	71	AZN1340	Head gear
	72	AZN1980	Eject arm 2
	73	AZN1342	Select lever
	74	AZN1343	Brake
	75	AZN1468	Tube
	76	AZN1985	Latch lever R
	77	AZN1346	Metal
	78	AZN1347	Metal
	79	AZN1348	Cushion
	80	AZN1349	Trigger arm
	81		.....
	82	AZS1085	Solenoid
	83		.....
	84	AZP1022	P head
	85	AZB1099	Step screw
	86	AZN1352	Tension spring
	87	AZN1304	Spacer
	88	AZN1470	Corner tube
	89	AZB1100	Step screw
	90	AZS1087	Solenoid
	91	AZB1101	Screw
	92	AZB1102	Screw washer
	93	AZN1471	Head spring
	94	AZB1298	Screw
	95	AZN1833	Holder capstan
	96	AZN1834	Holder capstan
	97	AZN1344	Eject lever L
	98		.....
	99		Holder
	200	AZB1084	Hexagonal nut
	201	AZB1085	E ring
	202	AZB1086	D screw
	203	AZB1121	P washer
	204	AZB1087	N washer

www.manualscenter.com

Mark	No.	Part No.	Description
	205	AZB1089	U bind screw
	206	AZB1090	P washer
	207	AZB1091	Oil cut
	208	AZB1092	Oil cut
	209		.....
	210	AZB1094	P washer
	211	AZB1095	D screw
	212		.....
	213	AZB1097	P washer
	214	AZB1098	M washer
	215	AZB1105	P screw
	216	AZB1106	D bind screw
	217		.....
	218	AZB1164	P screw
	300	AZX1020	Motor assembly
	301	AZP1042	Head frame assembly

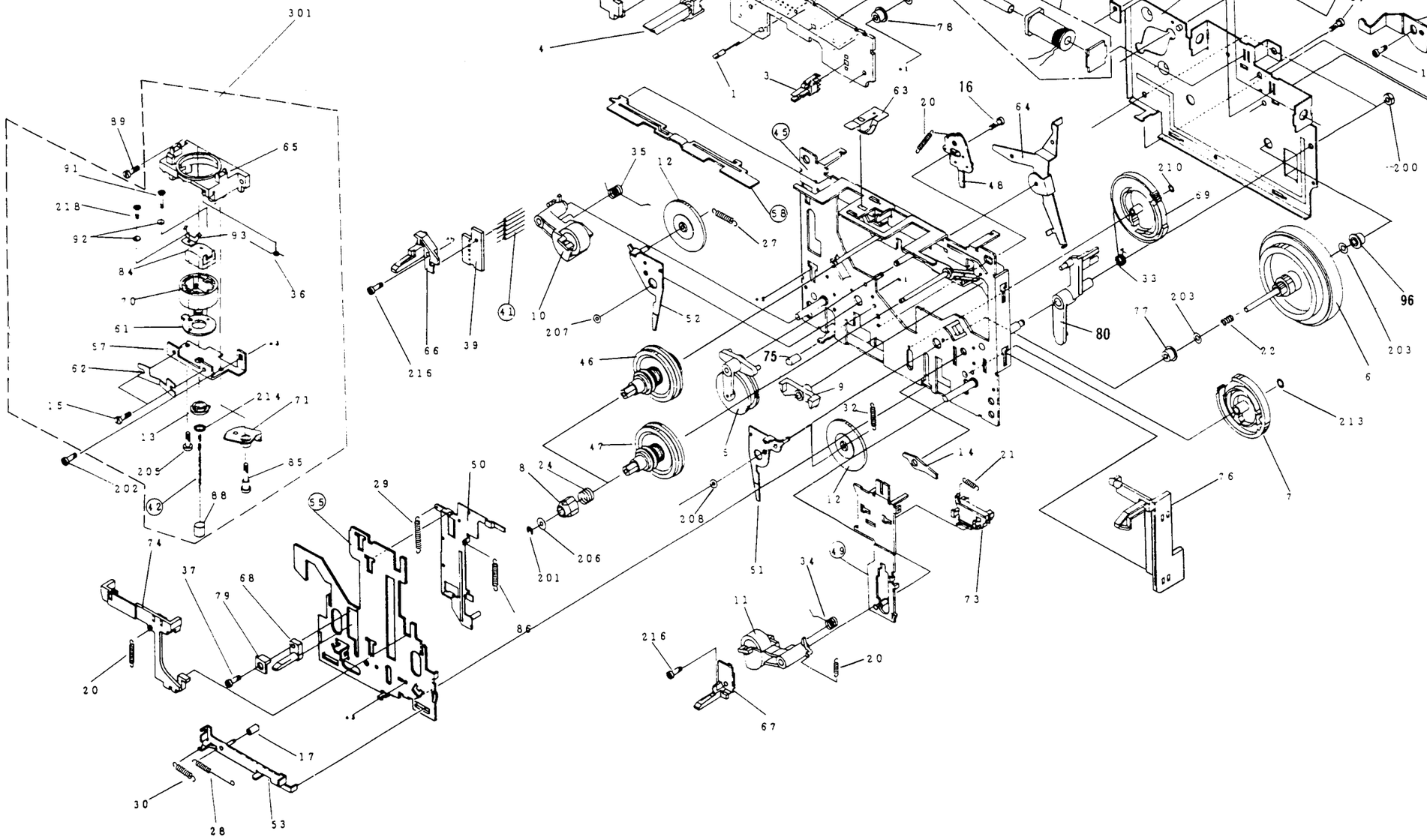

4.4 MECHANISM UNIT II (AWY1066)

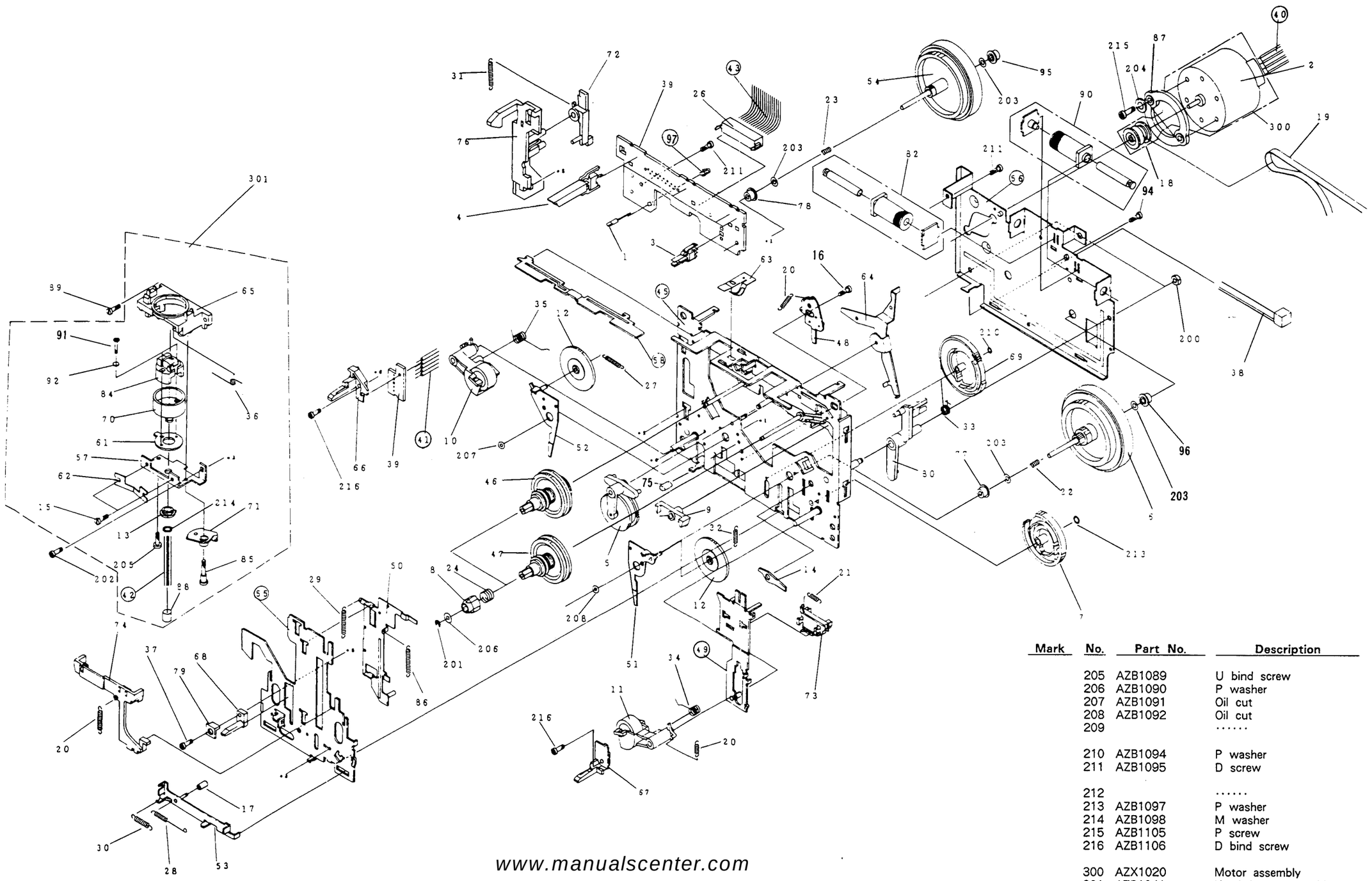

Mark	No.	Part No.	Description
	205	AZB1089	U bind screw
	206	AZB1090	P washer
	207	AZB1091	Oil cut
	208	AZB1092	Oil cut
	209		.....
	210	AZB1094	P washer
	211	AZB1095	D screw
	212		.....
	213	AZB1097	P washer
	214	AZB1098	M washer
	215	AZB1105	P screw
	216	AZB1106	D bind screw
	300	AZX1020	Motor assembly
	301	AZP1041	Head frame assembly

www.manualscenter.com

Mechanism Unit II (AWY1066)

Mark	No.	Part No.	Description
	1	AZE1018	Hall IC
	2	AZX1019	Motor
	3	AZS1054	Leaf switch (Mode)
	4	AZS1034	Leaf switch (ARF, HALF, METAL, CrO2, ARR)
	5	AZN1286	Drive arm assembly
	6	AZN1287	FW assembly A
	7	AZN1288	Cam gear
	8	AZN1289	Reel claw
	9	AZN1971	FR arm
	10	AZN1972	Pinch roller L assembly
	11	AZN1973	Pinch roller R assembly
	12	AZN1293	Gear
	13	AZN1294	H gear
	14	AZN1793	Cue arm
	15	AZB1079	Screw
	16	AZB1080	Screw
	17	AZN1984	Collar
	18	AZN1297	Motor pulley
	19	AZN1298	Flat belt
	20	AZN1299	Tension spring
	21	AZN1300	FR lever spring
	22	AZN1301	FWF spring
	23	AZN1302	FWR spring
	24	AZN1303	Pressure spring
	25		.....
	26	AZN1305	Cable holder
	27	AZN1306	Tension spring
	28	AZN1307	Tension spring
	29	AZN1308	Tension spring
	30	AZN1309	Tension spring
	31	AZN1310	Tension spring
	32	AZN1311	Tension spring
	33	AZN1312	Spring
	34	AZN1313	Spring
	35	AZN1314	Spring
	36	AZN1315	Spring
	37	AZB1081	Step screw
	38	AZN1316	Nylon band
	39	AZN1997	PC board
	40		Jumper wire
	41		Head lead wire
	42		Lead wire
	43		Lead wire
	44		.....
	45		Mechanism board caulking assembly
	46	AZN1319	R reel assembly
	47	AZN1320	F reel assembly
	48	AZN1321	Reverse arm caulking assembly
	49		FR lever caulking assembly
	50	AZN1975	PLAY lever caulking assembly
	51	AZN1976	Gear arm R
	52	AZN1977	Gear arm L
	53	AZN1326	Head lever caulking assembly
	54	AZN1327	FW assembly
	55		Head board
	56		Flywheel receiving plate
	57	AZN1328	Azimuth plate
	58		Switch arm
	59		.....
	60		.....
	61	AZN1330	Head arm
	62	AZN1331	Azimuth spring
	63	AZN1332	Cassette stopper
	64	AZN1978	Trigger arm
	65	AZN1334	Head frame
	66	AZN1335	Cassette guide L
	67	AZN1336	Cassette guide R
	68	AZN1337	Cassette guide
	69	AZN1338	Cam gear
	70	AZN1979	Head holder
	71	AZN1340	Head gear
	72	AZN1980	Eject arm 2
	73	AZN1342	Select lever
	74	AZN1343	Brake
	75	AZN1468	Tube
	76	AZN1981	Latch lever L
	77	AZN1346	Metal
	78	AZN1347	Metal
	79	AZN1348	Cushion
	80	AZN1349	Trigger arm
	81		.....
	82	AZS1085	Solenoid
	83		.....
	84	AZP1014	R/P/E head
	85	AZB1099	Step screw
	86	AZN1352	Tension spring
	87	AZN1304	Spacer
	88	AZN1470	Corner tube
	89	AZB1100	Step screw
	90	AZS1087	Solenoid
	91	AZB1101	Screw
	92	AZB1102	Screw washer
	93		.....
	94	AZB1298	Screw
	95	AZN1833	Holder capstan
	96	AZN1834	Holder capstan
	97		Holder
	200	AZB1084	Hexagonal nut
	201	AZB1085	E ring
	202	AZB1086	D screw
	203	AZB1121	P washer
	204	AZB1087	N washer

Parts List of CD Player Block, Servo Mechanism Block

Mark	No.	Part No.	Description
	1	PBA1042	Floating screw (FE)
	2	PBH1085	Coil spring
	3	PEB1127	Rubber belt
	4		Shaft (FE)
	5		Magnet
	6		Yoke (FE)
	7		Swing lever (FE)
	8		Shield plate (FE)
	9		Clamper S (ABS)
	10	PNW1634	Motor pulley (POM)
	11	PNW1673	Clamper base (ABS)
	12	PNW1674	Rack (ABS)
	13	PNW1675	Sync plate (POM)
	14	PNW1676	Gear A (POM)
	15	PNW1677	Gear B (POM)
	16	PNW1678	Gear pulley (POM)
	17	PNW1679	Sensor head (ABS)
	18	PNW1680	Slide bush (POM)
	19		Loading base (ABS)
	20		Servo mechanism assembly
	21	PXM1017	DC motor/0.75W
	22	BPZ26P080FMC	Screw
	23	IPZ30P080FMC	Screw
	24	DSK1001	Lever switch
	25		Main board assembly
	26	BPZ20P080FZK	Screw
	27	JFZ20P025FMC	Screw
	28	PBH1009	Ground spring
	29	PBH1084	Drive spring (steel)
	30	PBK1057	Plate spring
	31	PEB1072	Belt
	32	PLA1003	Drive screw
	33	PLA1071	Guide bar (steel)
	34	PMZ20P030FMC	Screw
	35		Motor base (FE)
	36	PNW1066	Pulley
	37	PNW1605	Half nut (plastic)
	38	PNW1608	Disk table (PC)
	39	PNW1634	Motor pulley (POM)
	40	PEA1030	Pickup assembly
	41		Mechanism base
	42	PEA1028	Spindle DC motor assembly
	43	PXM1013	DC motor/1.7W
	44	PSH1003	Slide switch
	45	PEB1014	Floating rubber
	46	PEB1132	Floating rubber
	47		Actuator cover
	48		Connector assembly (5P)
	49		Ground lead unit
	50		Connector assembly (6P)
	51	PCP1008	Semi-fixed VR
	52	CKSYF105Z16	Chip capacitor
	53	PMZ26P040FMC	Screw
	54	WT26D047D050	Washer
	55	WA62D095D013	Washer
	56	PBZ30P080FMC	Screw
	57		Mechanism chassis
	58	PPZ30P100FMC	Screw
	59	ZMK20H040FBT	Screw

www.manualscenter.com

4.5 CD PLAYER BLOCK, SERVO MECHANISM BLOCK

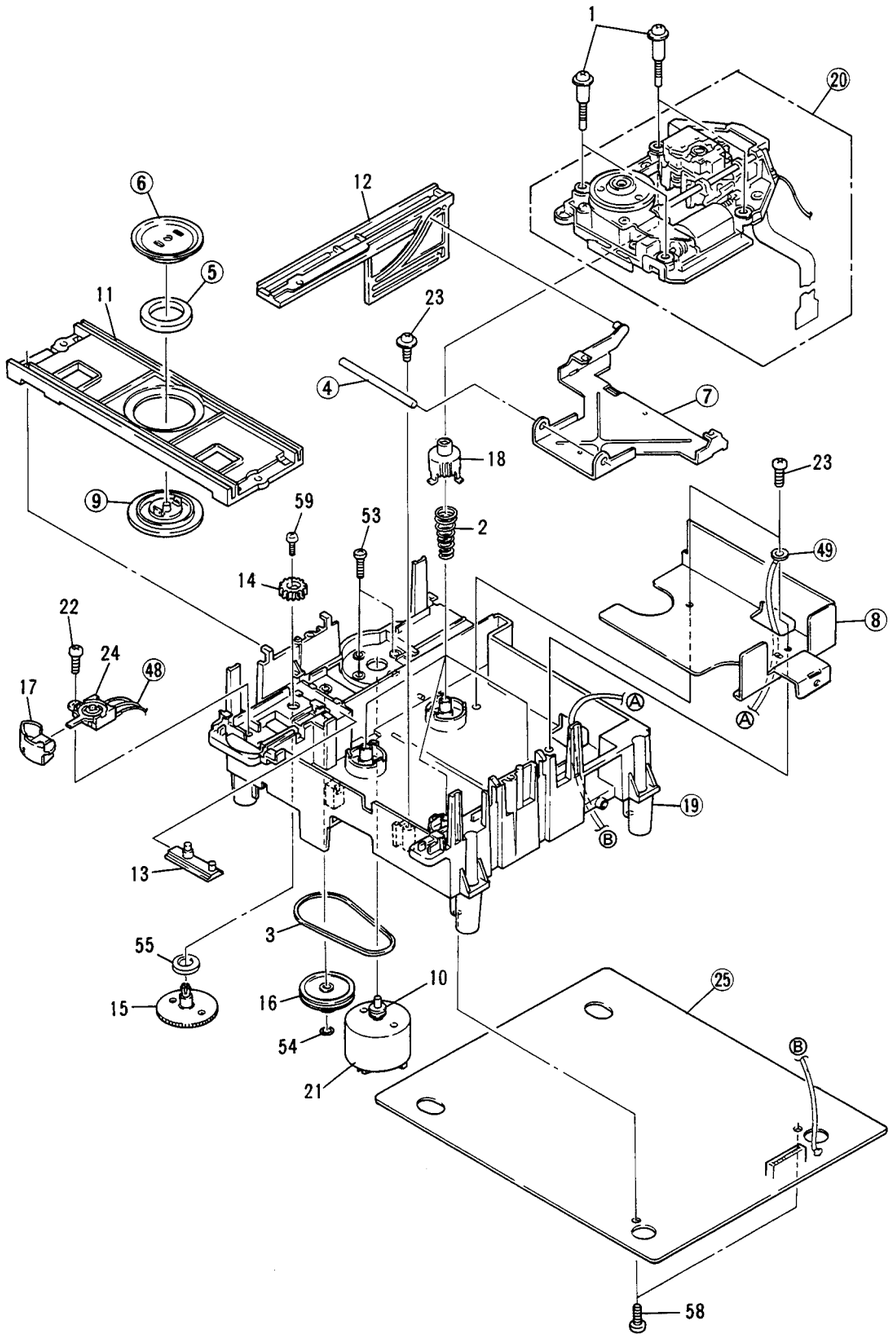

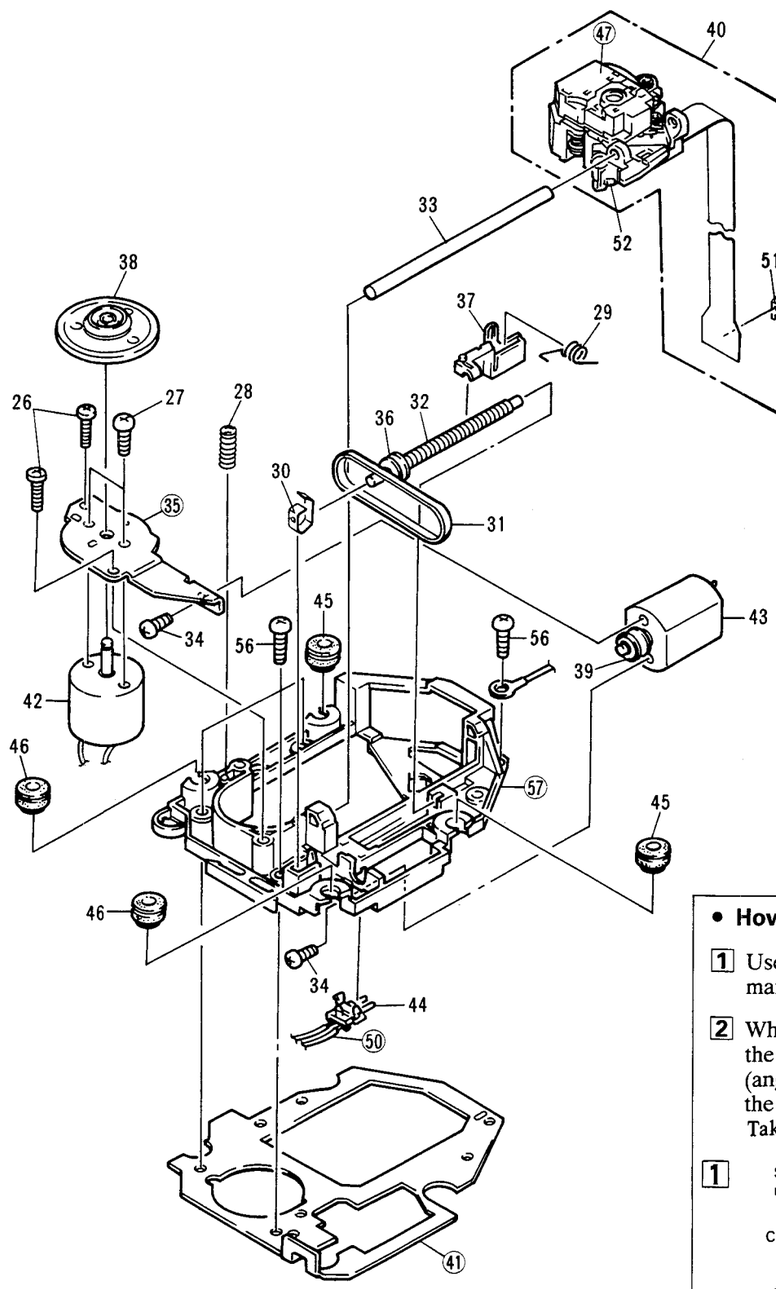

- **How to install the disc table**

1 Use nippers or other tool to cut the two sections marked Ⓐ in figure 1. Then remove the spacer.

2 While supporting the spindle motor shaft with the stopper, put spacer on top of the motor base (angled so it doesn't touch section Ⓑ), and stick the disc table on top (takes about 9kg pressure). Take off the spacer.

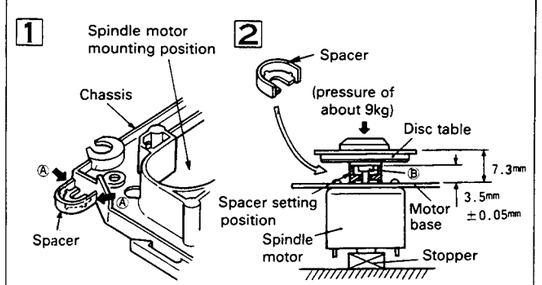

www.manualscenter.com

5. OVER ALL SCHEMATIC DIAGRAM

www.manualscenter.com

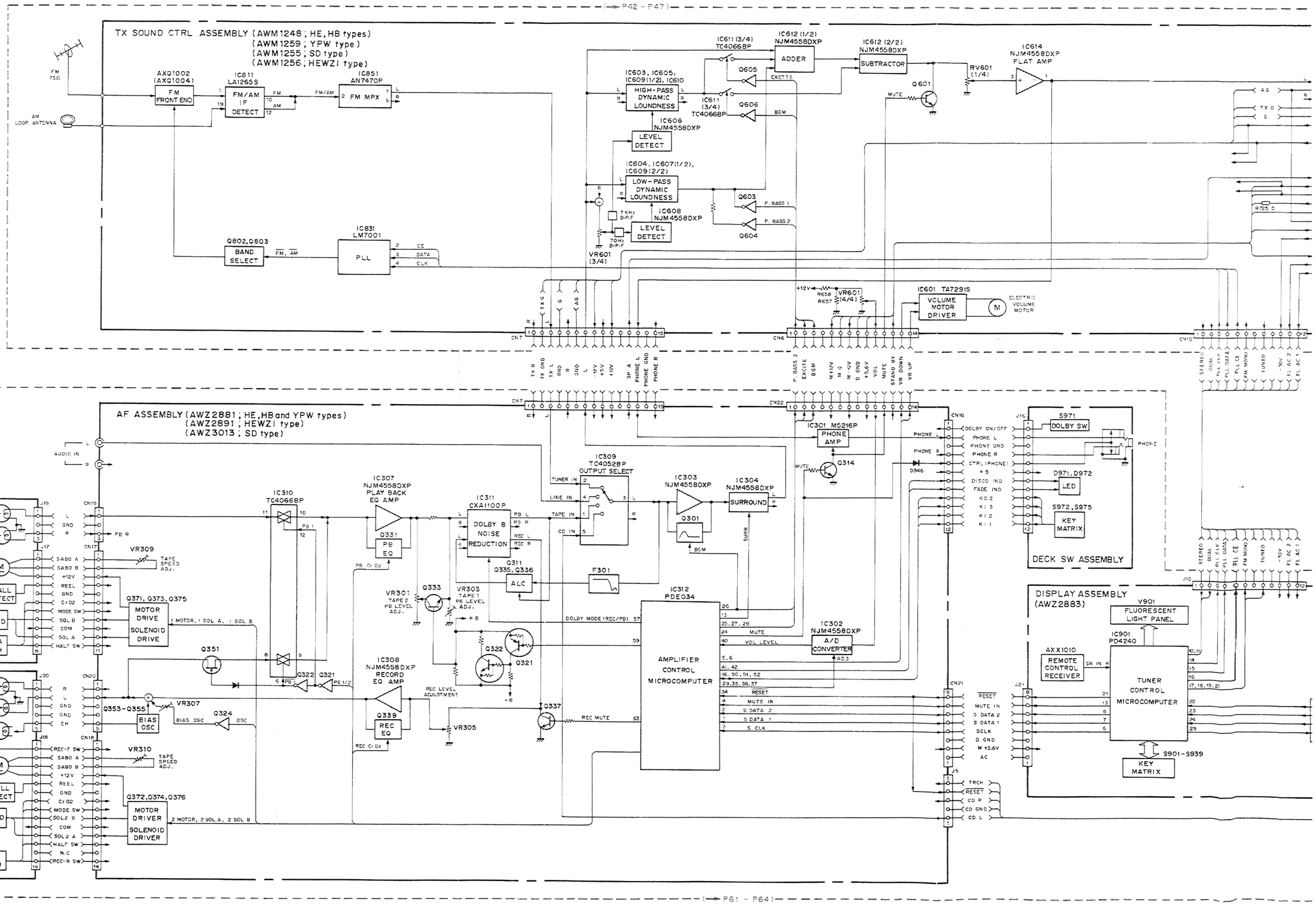

www.manualscenter.com

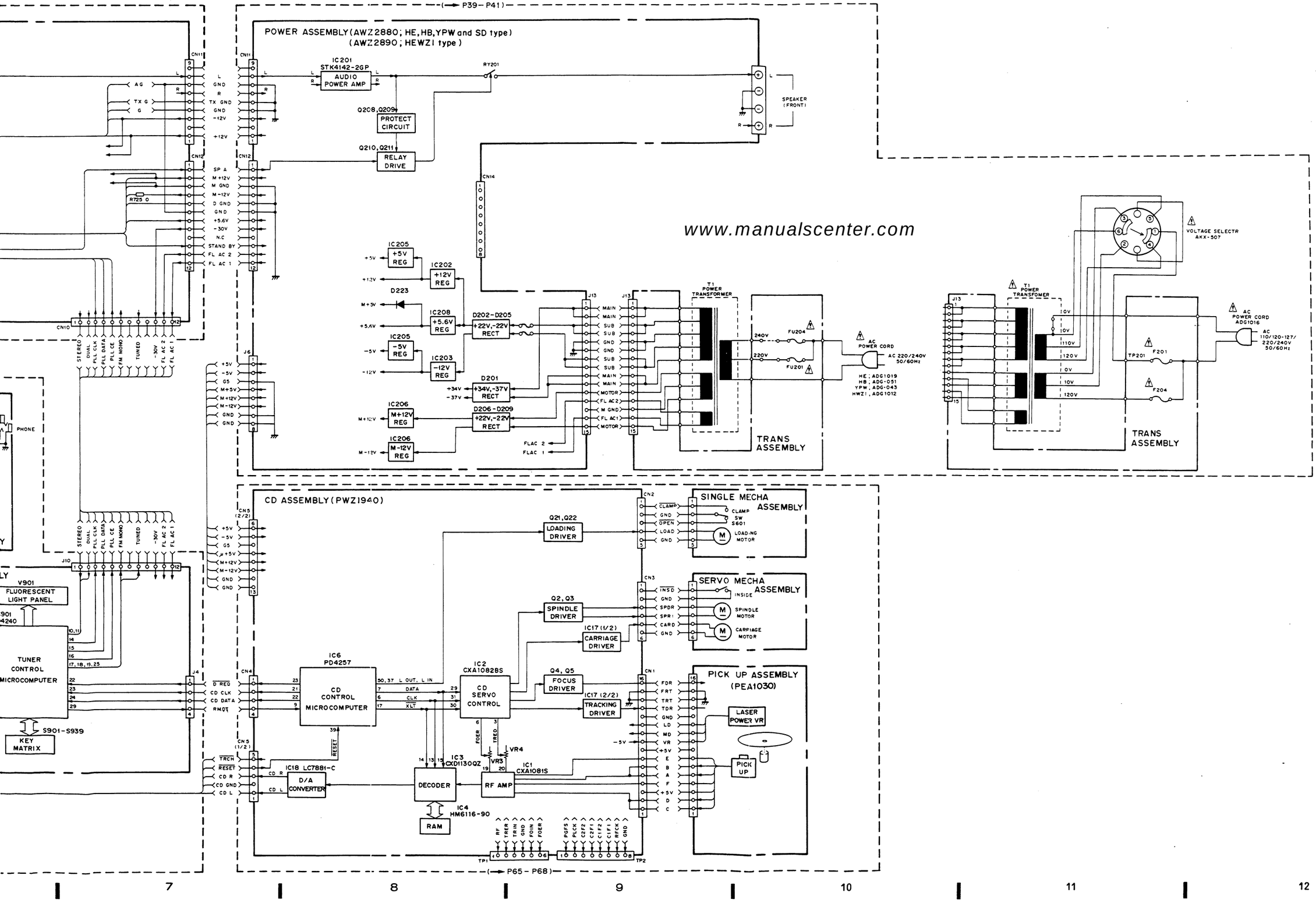

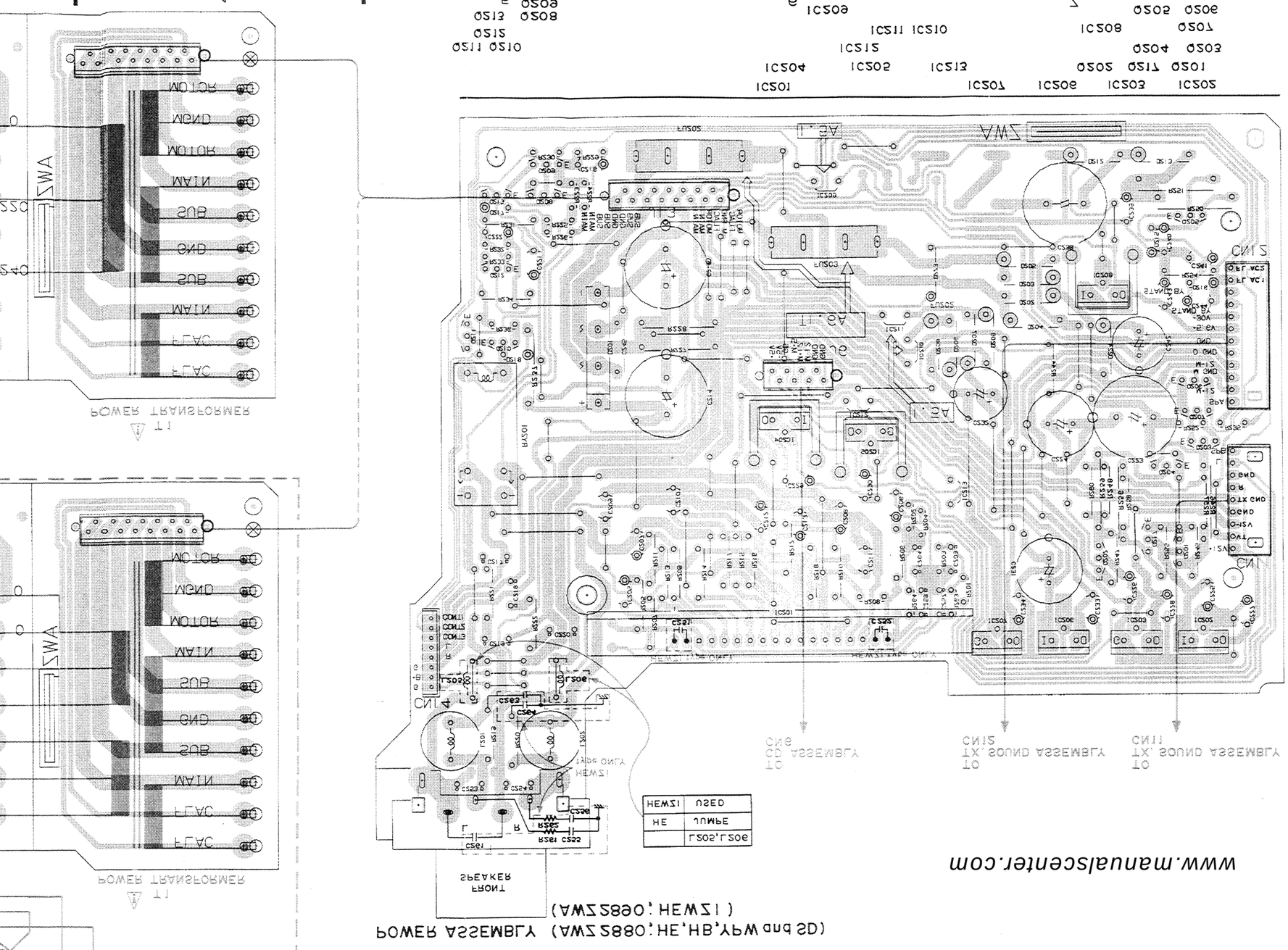

www.manualscenter.com

6. SCHEMATIC DIAGRAMS AND P.C. BOARD PATTERNS

6.1 P.C. BOARD PATTERN OF POWER ASSEMBLY

• View from soldering side

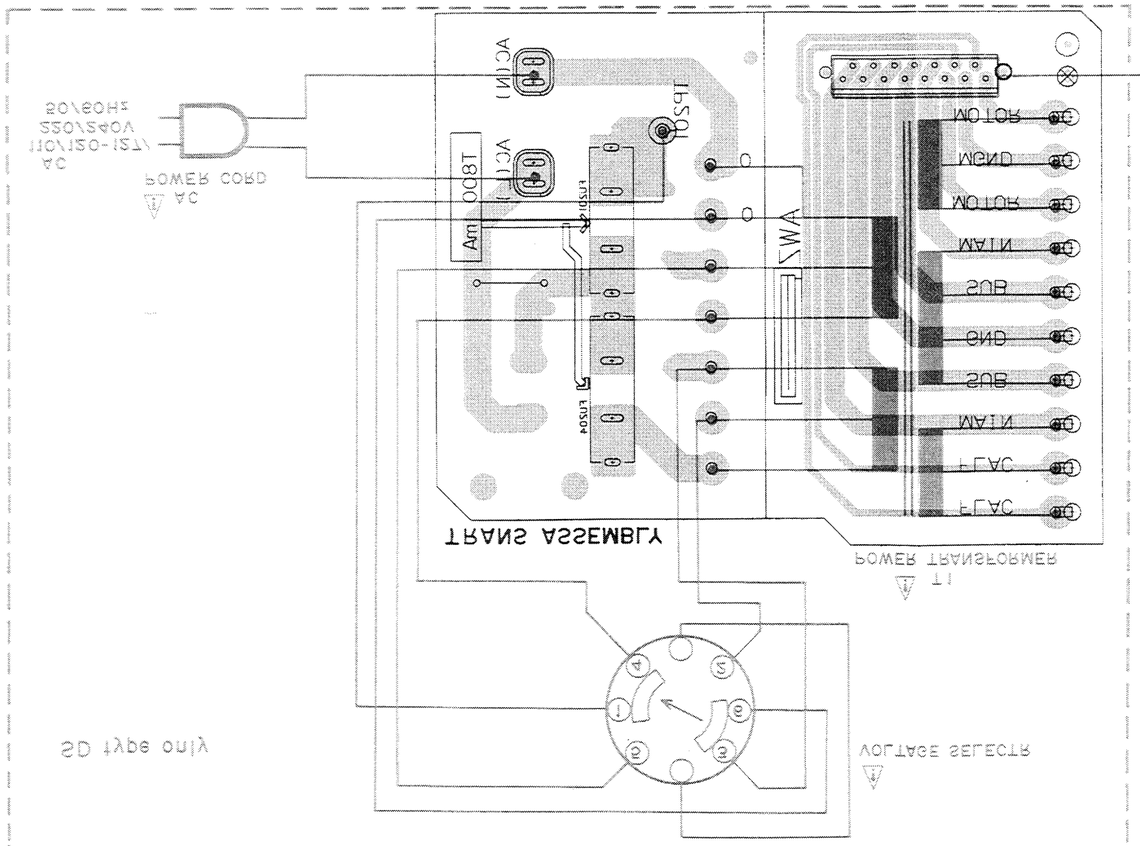

www.manualscenter.com

6. SCHEMATIC DIAGRAMS AND P.C. BOARD PATTERNS

6.1 P.C. BOARD PATTERN OF POWER ASSEMBLY

- View from component side

www.manualscenter.com

POWER ASSEMBLY (AWZ2880; HE, HB, YPW and SD)
(AWZ2890; HEWZ1)

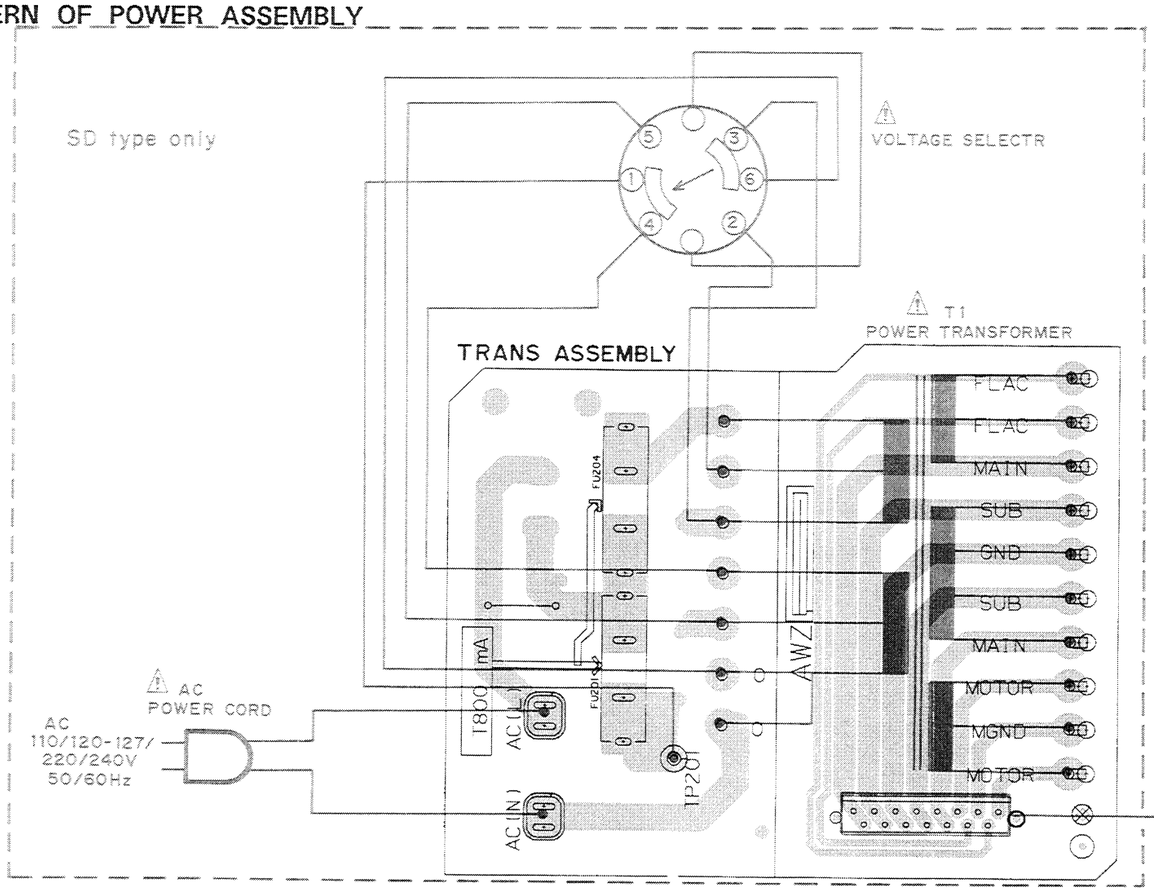

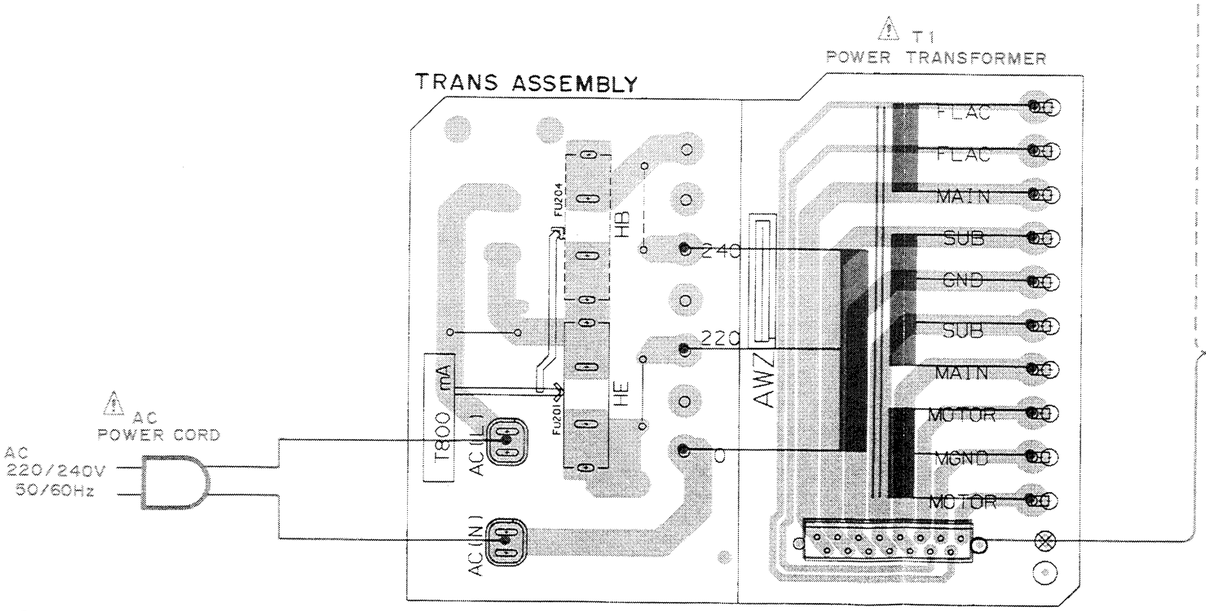

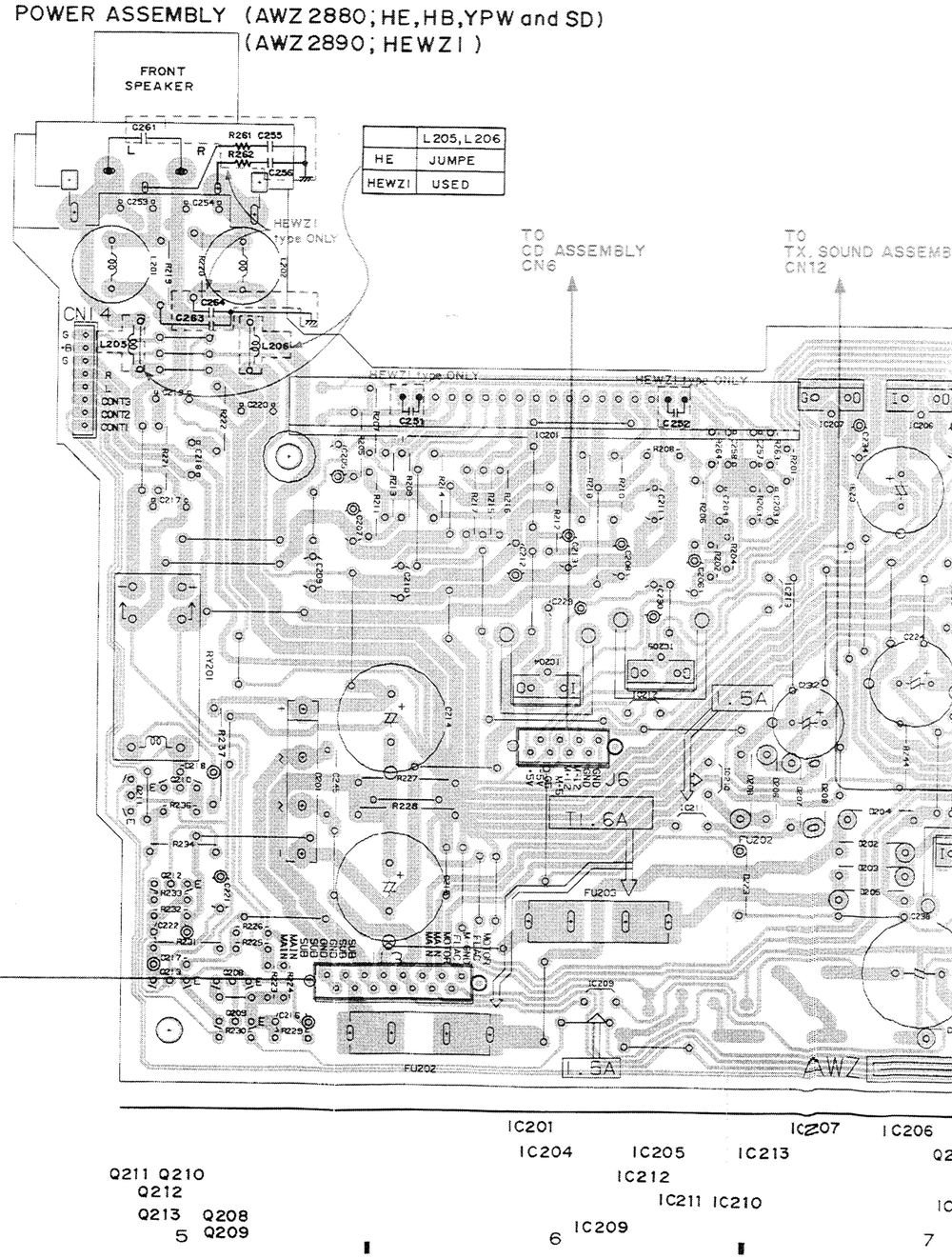

RNS

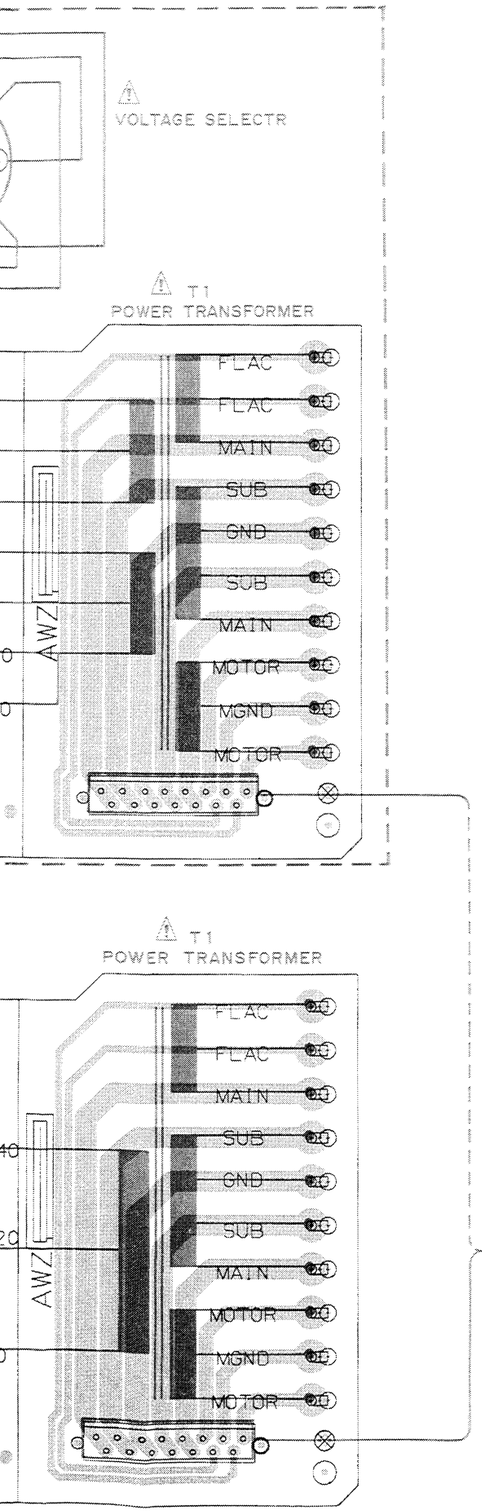

POWER ASSEMBLY (AWZ2880; HE, HB, YPW and SD)
(AWZ2890; HEWZ1)

www.manualscenter.com

	L205, L206
HE	JUMPE
HEWZ1	USED

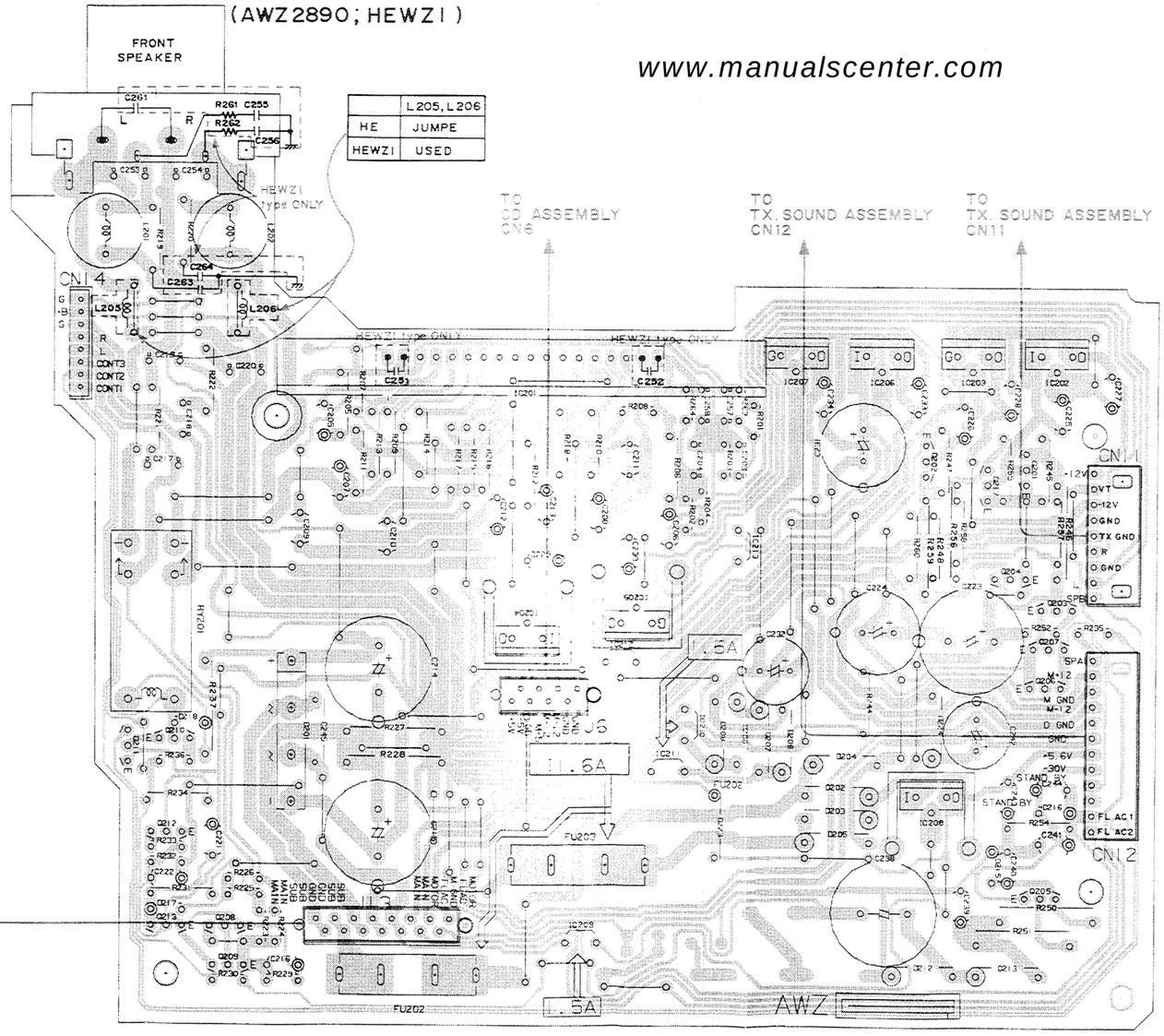

IC201 IC207 IC206 IC203 IC202
IC204 IC205 IC213 Q202 Q217 Q201
IC212 Q204 Q203
Q211 Q210 IC211 IC210 IC208 Q207
Q212
Q213 Q208 IC209 Q205 Q206
Q209

NOTE

1. This P.C.B connection diagram is viewed from the parts mounted side.
2. The parts which have been mounted on the board can be replaced with those shown with the corresponding wiring symbols listed in the following Table.

P.C.B. pattern diagram indication	Corresponding part symbol	Part Name
Q504	E or E	Transistor
Q215	or	Radiator type transistor
D203	D203	Diode
R237	R237	Resistor
C513		Capacitor (Polarity)
C518		Capacitor (Non-polarity)

Others

P.C.B. pattern diagram indication	
IC	IC
S	Switch
RY	Relay
L	Coil
F	Filter
VR	Variable resistor or Semi-fixed resistor

3. The capacitor terminal marked with (double circles) shows negative terminal.
4. The diode terminal marked with (double circles) shows cathode side.
5. The transistor terminal to which E is affixed shows the emitter.

6.2 SCHEMATIC DIAGRAM OF POWER ASSEMBLY

www.manualscenter.com

(AWZ2880; HE, HB, YPW and SD type)
POWER ASSEMBLY (AWZ2890; HEWZ1 type)

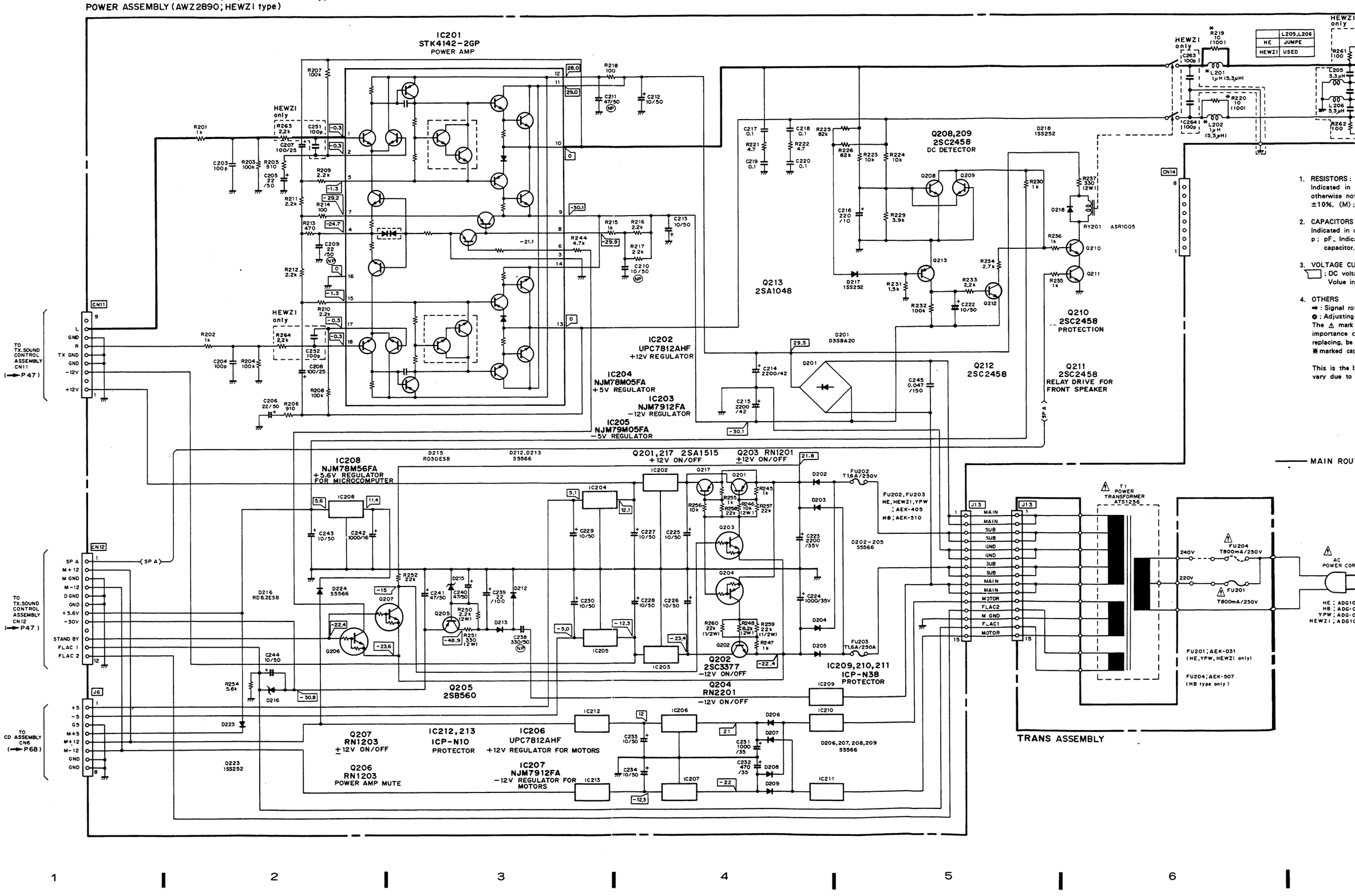

www.manualscenter.com

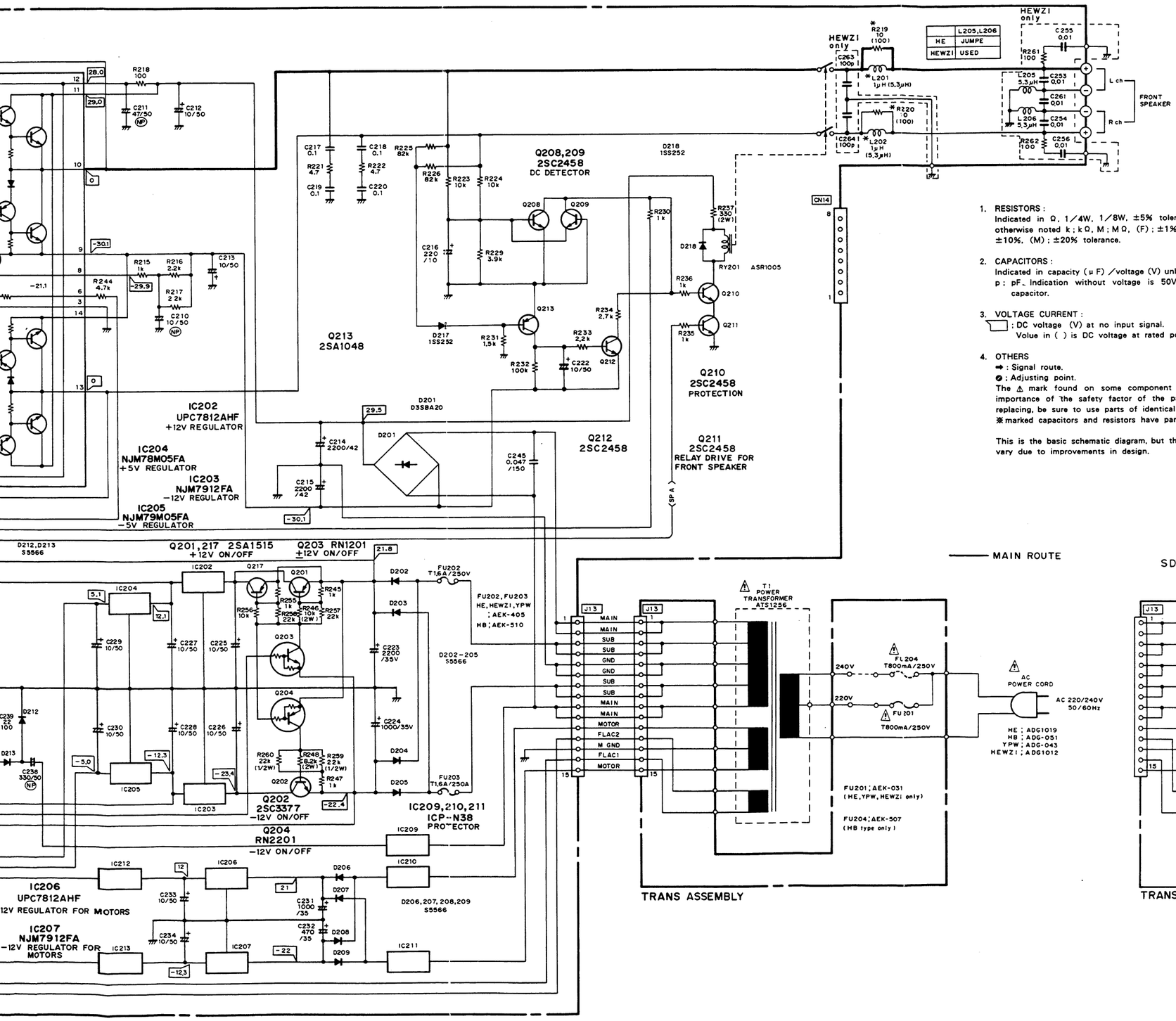

1. RESISTORS :
   Indicated in Ω, 1/4W, 1/8W, ±5% tolerance unless otherwise noted k ; kΩ, M ; MΩ, (F) ; ±1%, (G) ; ±2%, (K) ; ±10%, (M) ; ±20% tolerance.

2. CAPACITORS :
   Indicated in capacity (μF) / voltage (V) unless otherwise noted p ; pF. Indication without voltage is 50V except electrolytic capacitor.

3. VOLTAGE CURRENT :
   ▭ ; DC voltage (V) at no input signal.
   Volue in ( ) is DC voltage at rated power.

4. OTHERS
   ➡ : Signal route.
   ⊘ ; Adjusting point.
   The ⚠ mark found on some component parts indicates the importance of the safety factor of the part. Therefore, when replacing, be sure to use parts of identical designation.
   ※ marked capacitors and resistors have parts numbers.

This is the basic schematic diagram, but the actual circuit may vary due to improvements in design.

6.3 SCHEMATIC DIAGRAM OF TX.SOUND CTRL ASSEMBLY (1/2)

www.manualscenter.com

1. RESISTORS :
Indicated in Ω, 1/4W, 1/8W, ±5% tolerance unless otherwise noted k ; kΩ, M ; MΩ, (F) ; ±1%, (G) ; ±2%, (K) ; ±10%, (M) ; ±20% tolerance.

2. CAPACITORS :
Indicated in capacity (μ F) /voltage (V) unless otherwise noted p ; pF. Indication without voltage is 50V except electrolytic capacitor.

3. VOLTAGE CURRENT :
; DC voltage (V) at no input signal.
Volue in ( ) is DC voltage at rated power.

4. OTHERS
➡ : Signal route.
⊘ ; Adjusting point.
The ⚠ mark found on some component parts indicates the importance of the safety factor of the part. Therefore, when replacing, be sure to use parts of identical designation.
※marked capacitors and resistors have parts numbers.

This is the basic schematic diagram, but the actual circuit may vary due to improvements in design.

5. CHIP PARTS

- Indicates a chip resistor.
- Indicates a chip capacitor.
- Indicates a chip transistor.
- Indicates a chip diode.
- Indicates a chip inductor.
- Diode

TX. SOUND CONTROL (1/2) ASSEMBLY (AWM1248 ; HE, HB type) (AWM1259 ; YPW type) (AWM1255 ; SD type) (AWM1256 ; HEWZ1 type)

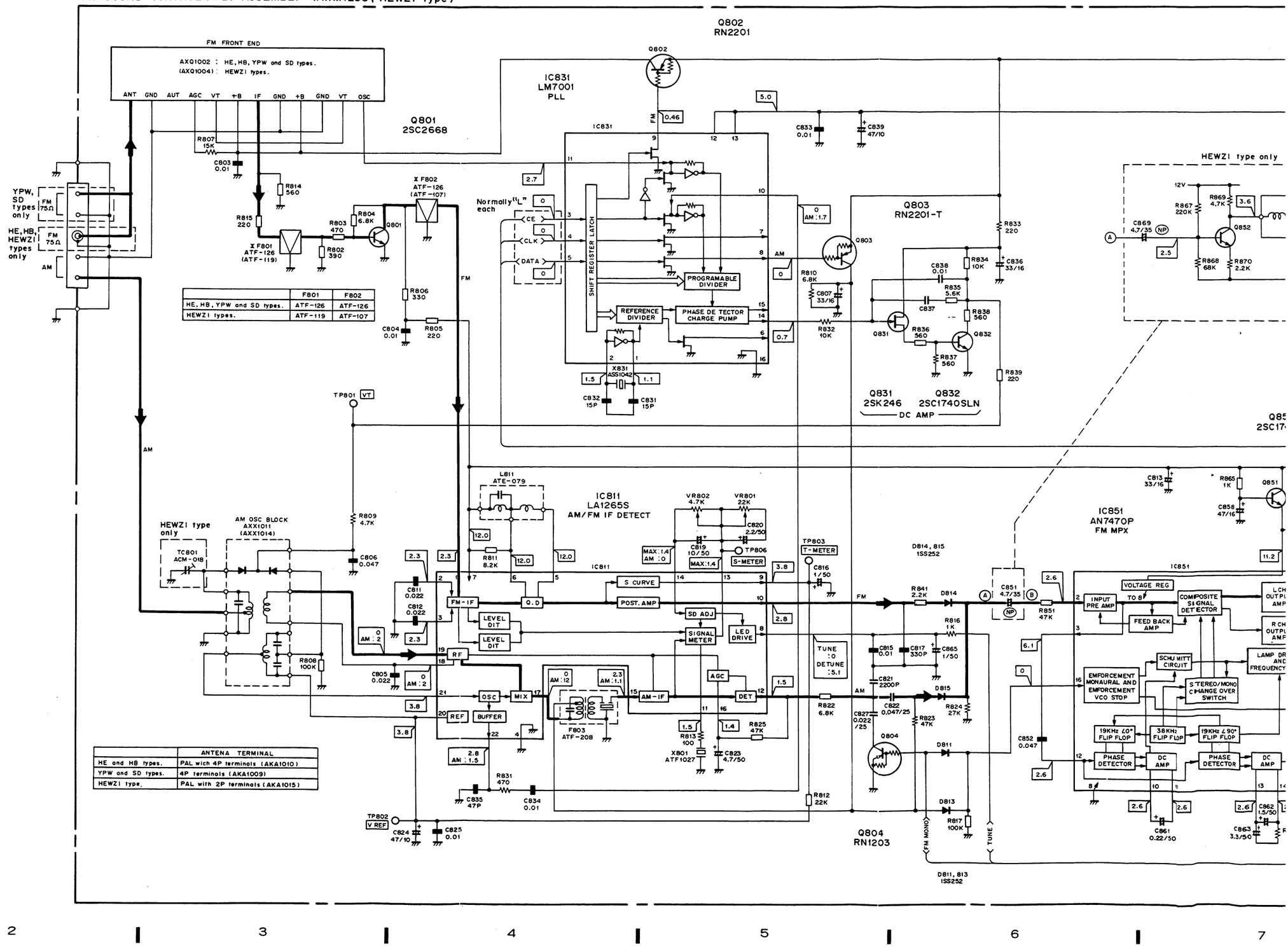

	F801	F802
HE, HB, YPW and SD types.	ATF-126	ATF-126
HEWZ1 types.	ATF-119	ATF-107

	ANTENA TERMINAL
HE and HB types.	PAL wich 4P terminals (AKA1010)
YPW and SD types.	4P terminals (AKA1009)
HEWZ1 type.	PAL with 2P terminals (AKA1015)

M1248 ; HE, HB type)
M1259 ; YPW type)
M1255 ; SD type)
M1256 ; HEWZ1 type)

www.manualscenter.com

Q802
RN2201

Q801
2SC2668

IC831
LM7001
PLL

IC831
LA1265S
AM/FM IF DETECT

IC851
AN7470P
FM MPX

Q803
RN2201-T

Q831
2SK246

Q832
2SC1740SLN
DC AMP

Q851
2SC1740S

Q804
RN1203

HEWZ1 type only

SD type only

	C853, C854	C857, C868	R852	R861, R862
HE and HB types.	1000P	4700P	82K	3.3K
SD type	1200P	6800P	82K	3.3K
HEWZ1 type	1000P	3300P	68K	5.6K

6.4 SCHEMATIC DIAGRAM OF TX.SOUND CTRL ASSEMBLY (2/2)

(AWM1248; HE, HB type)
(AWM1259; YPW type)
(AWM1255; SD type)
TX. SOUND CONTROL (2/2) ASSEMBLY (AWM1256; HEWZ1 type)

www.manualscenter.com

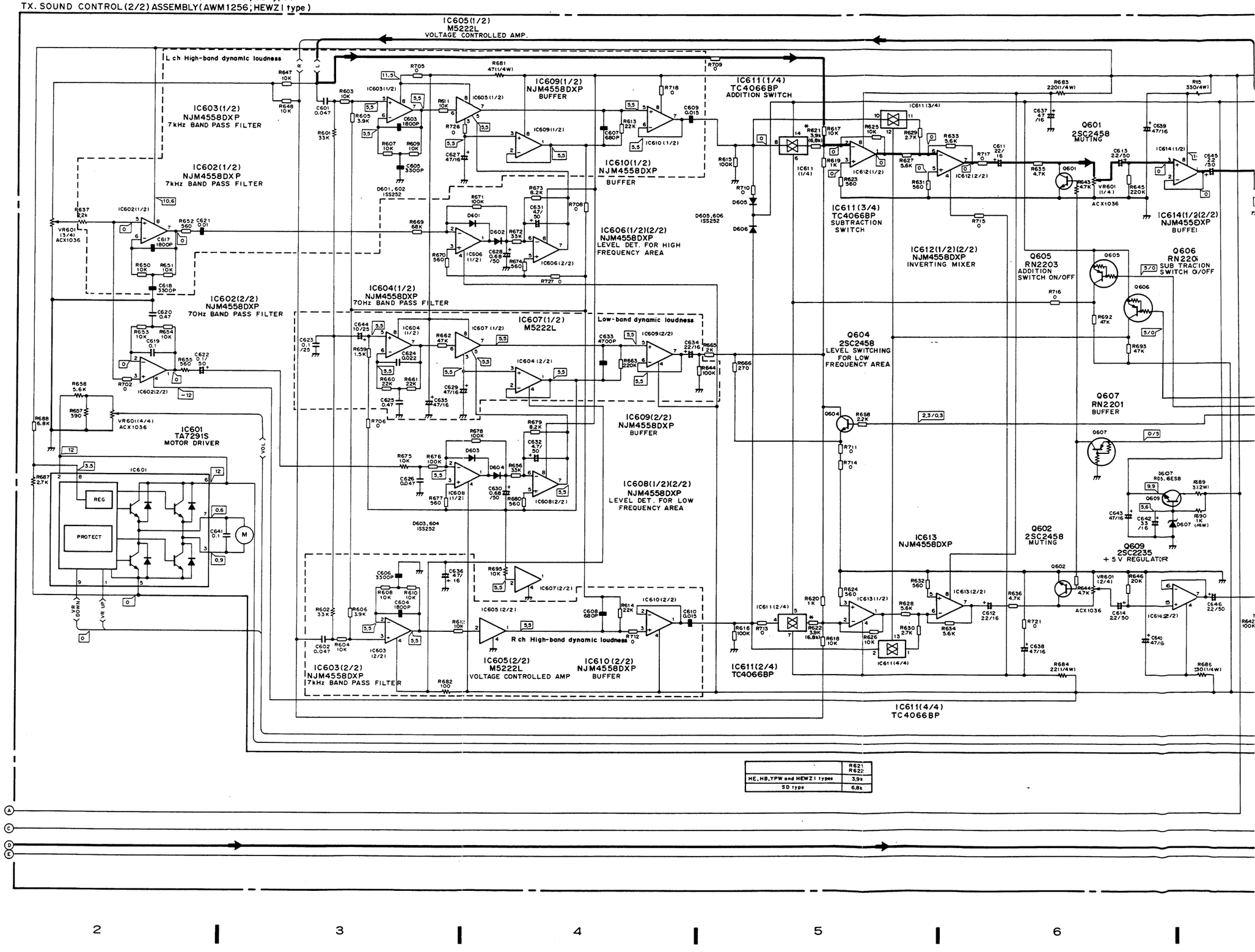

	R621 R622
HE, HB, YPW and HEWZ1 types	3.9k
SD type	6.8k

www.manualscenter.com

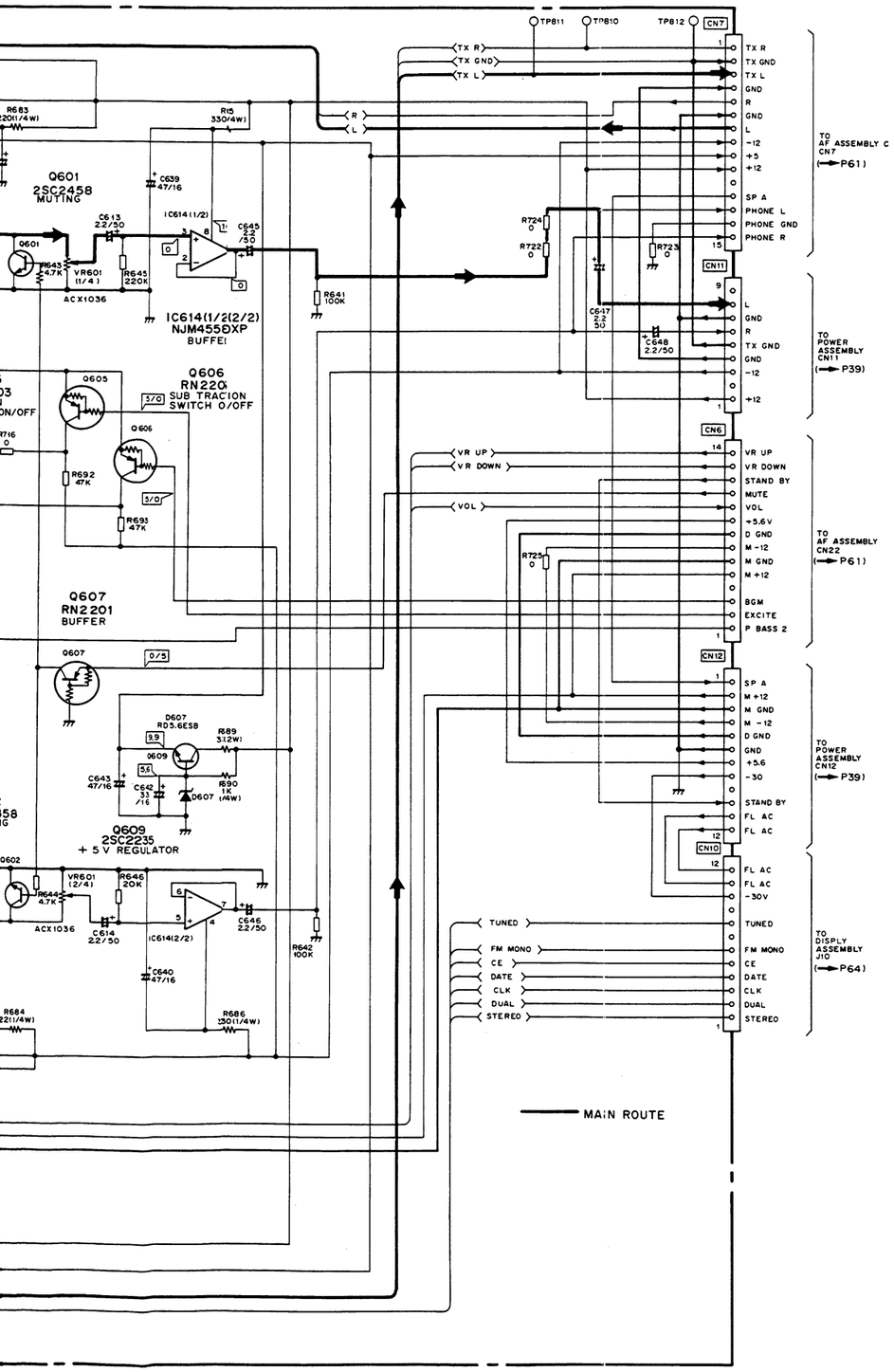

6.5 P.C. BOARD PATTERN OF TX.SOUND CTRL ASSEMBLY

- View from component side

Note : Body colors of chip parts
BLACK ---- Resistor
GREEN --- Jumper (0Ω resistor)
BROWN --- Capacitor

TX. SOUND CONTROL ASSEMBLY
(AWM1248;HE,HB)
(AWM1259;YPW)
(AWM1255;SD)
(AWM1256;HEWZ1)

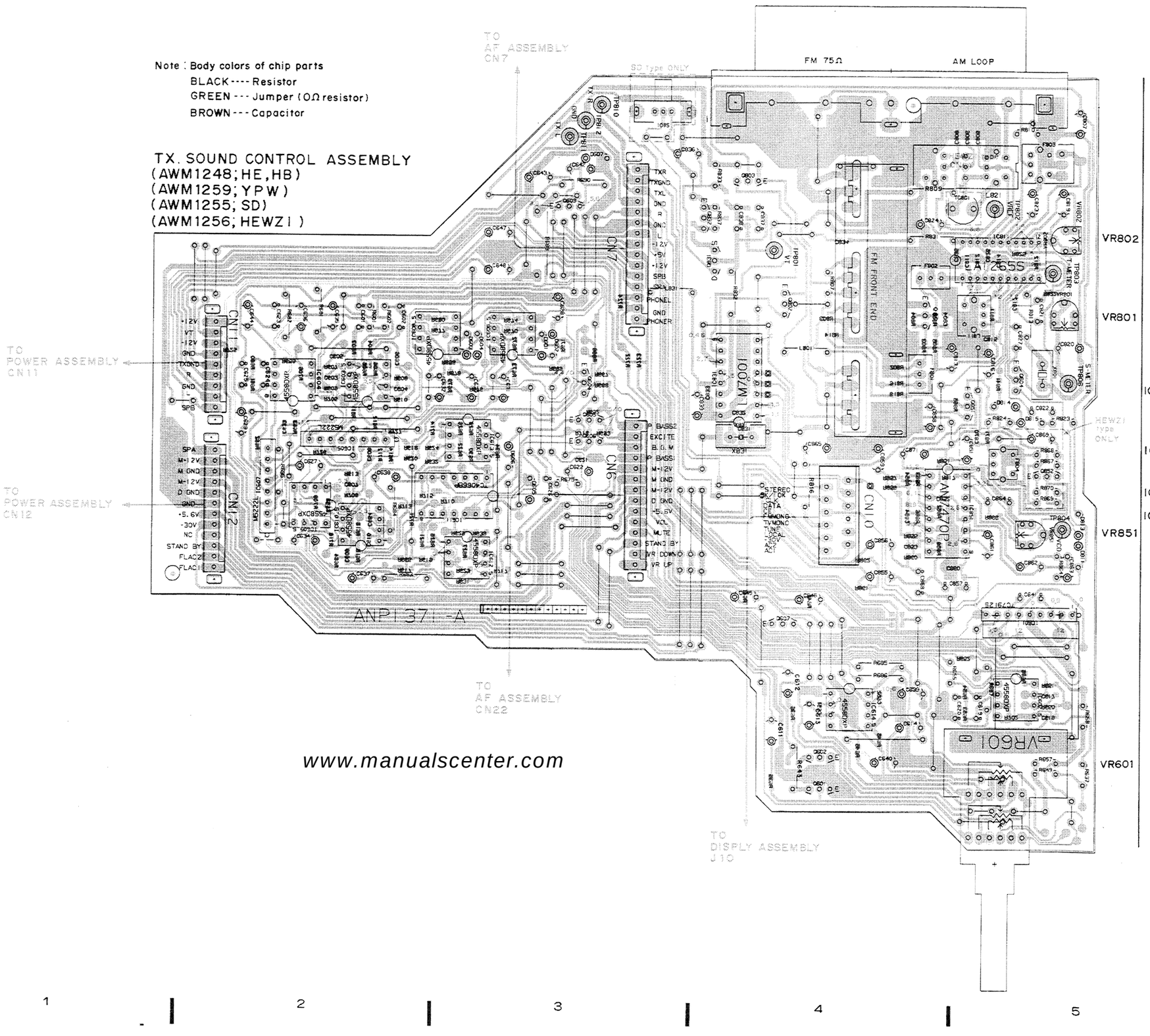

www.manualscenter.com

• View from soldering side

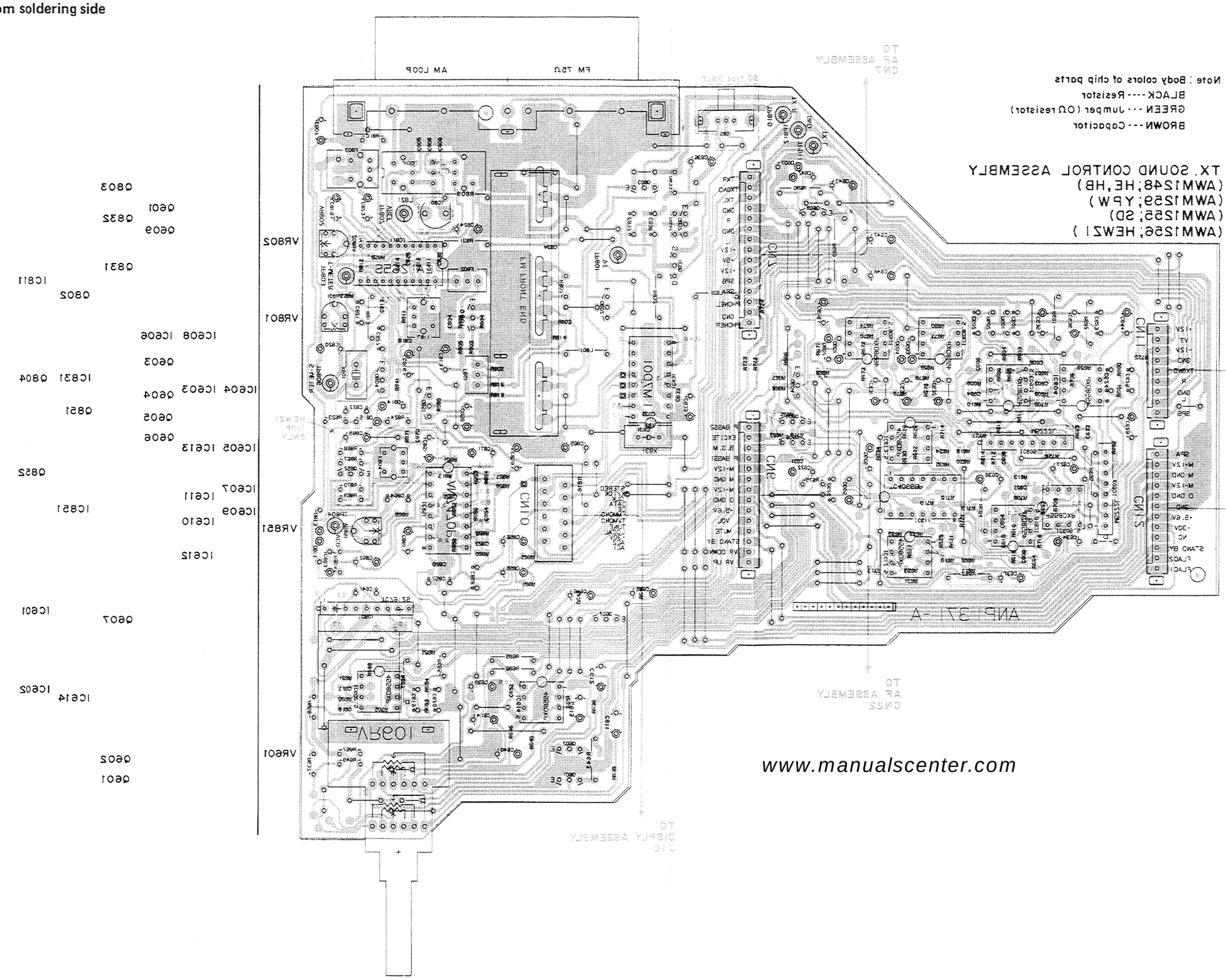

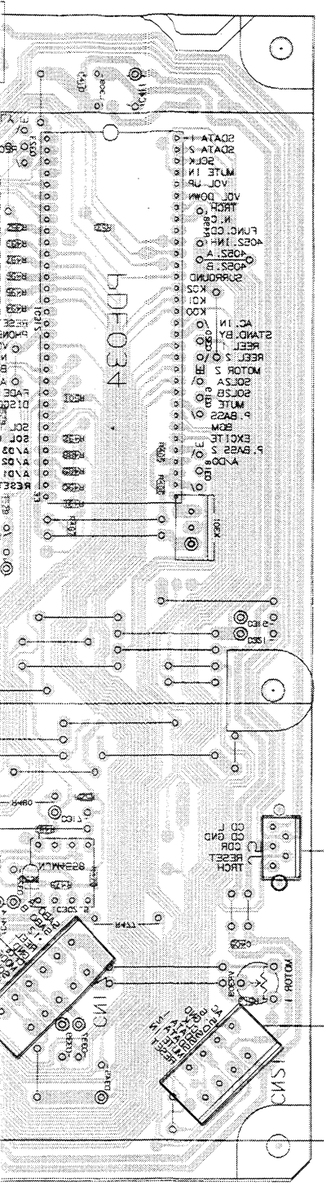
CN1
CN2
CN3
CN4
CN5
CN6
CN7
CN8
CN9
CN10
CN11
CN12
CN13
CN14
CN15
CN16
CN17
CN18
CN19
CN20
CN21
CN22
CN23
CN24
CN25
CN26
CN27
CN28
CN29
CN30
CN31
CN32
CN33
CN34
CN35
CN36
CN37
CN38
CN39
CN40
CN41

8.8 P.C. BOARD PATTERN OF AT ASSEMBLY

● View from soldering side

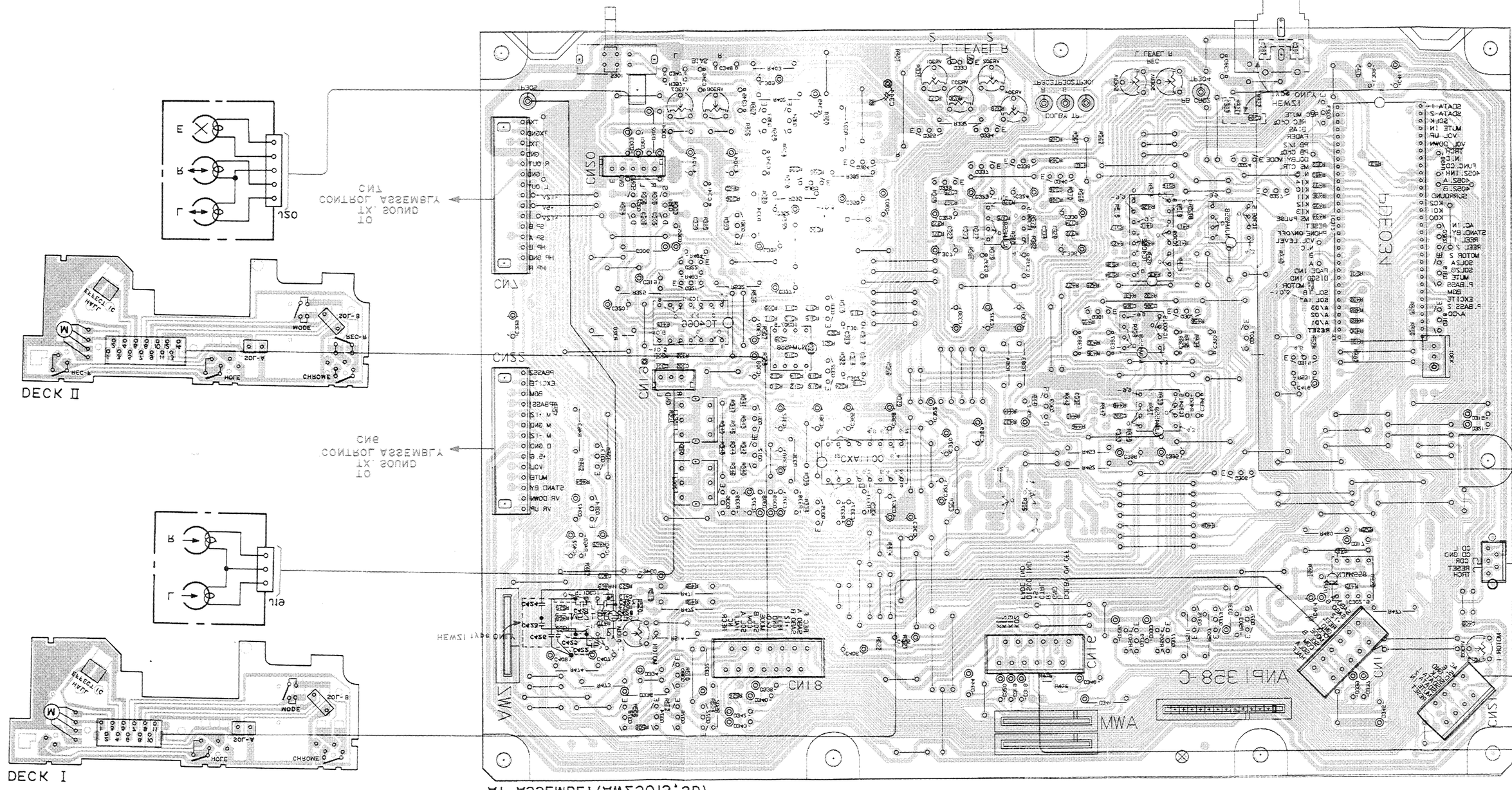

6.6 P.C. BOARD PATTERN OF AF ASSEMBLY

- **View from component side**

www.manualscenter.com

(AWZ2881;HE,HB and YPW)
(AWZ2891;HEWZ1)
AF ASSEMBLY(AWZ3013;SD)

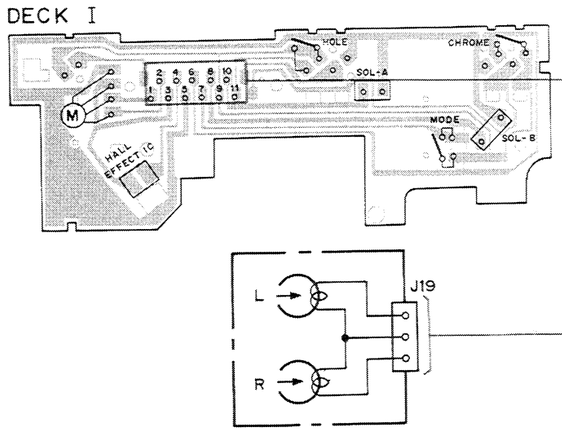

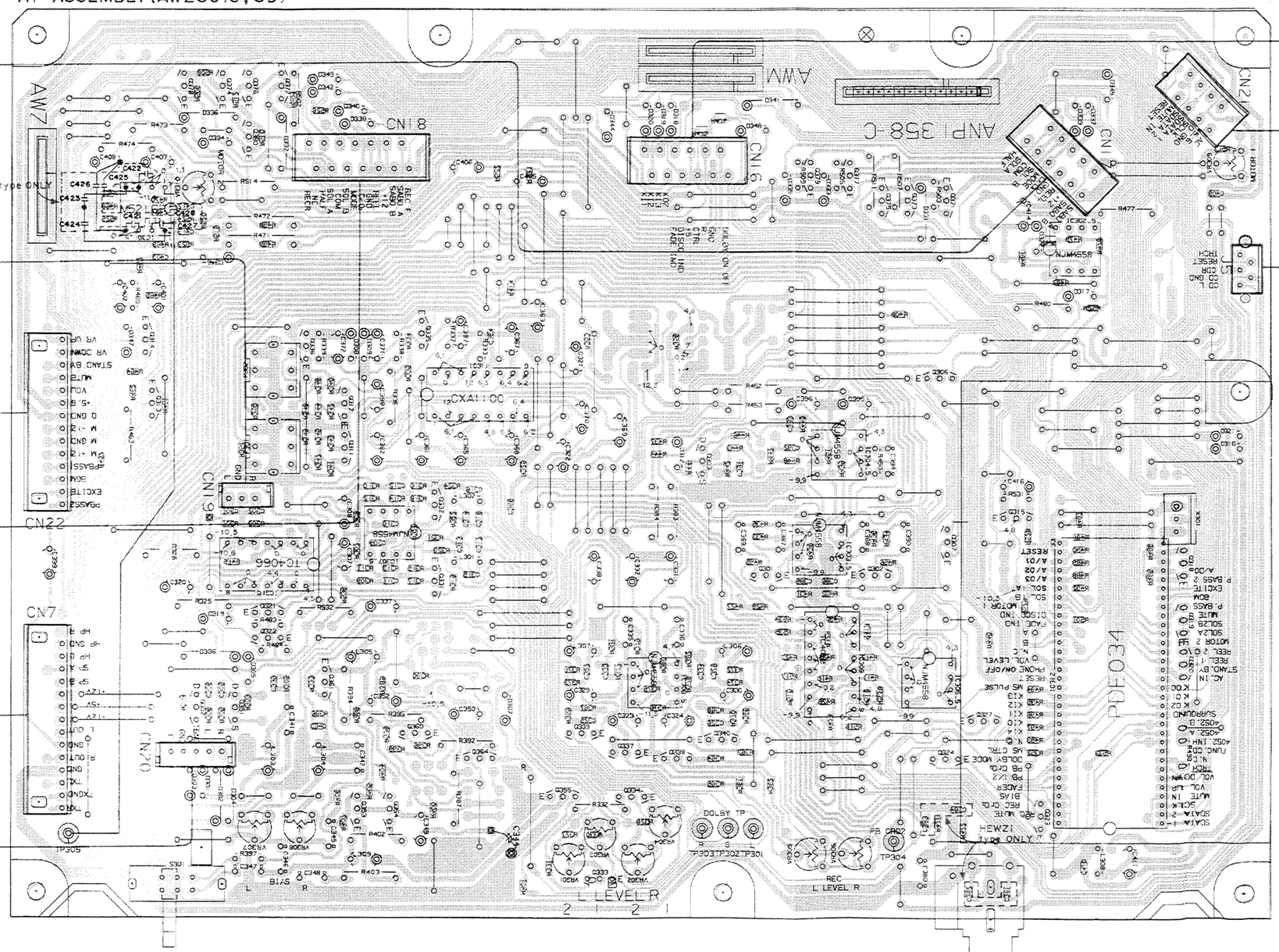

DECK SW ASSEMBLY

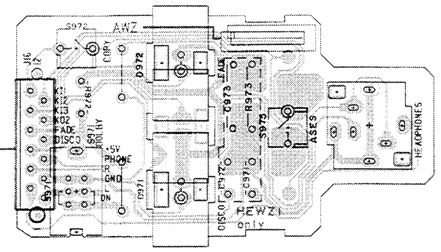

Note : Body colors of chip parts
BLACK ---- Resistor
GREEN---- Jumper (0Ω resistor)
BROWN --- Capacitor

www.manualscenter.com

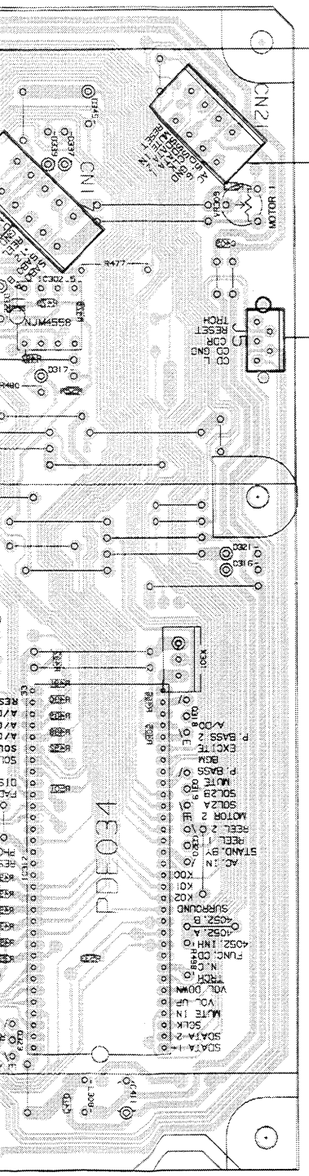

DISPLAY ASSEMBLY(AWZ2883)

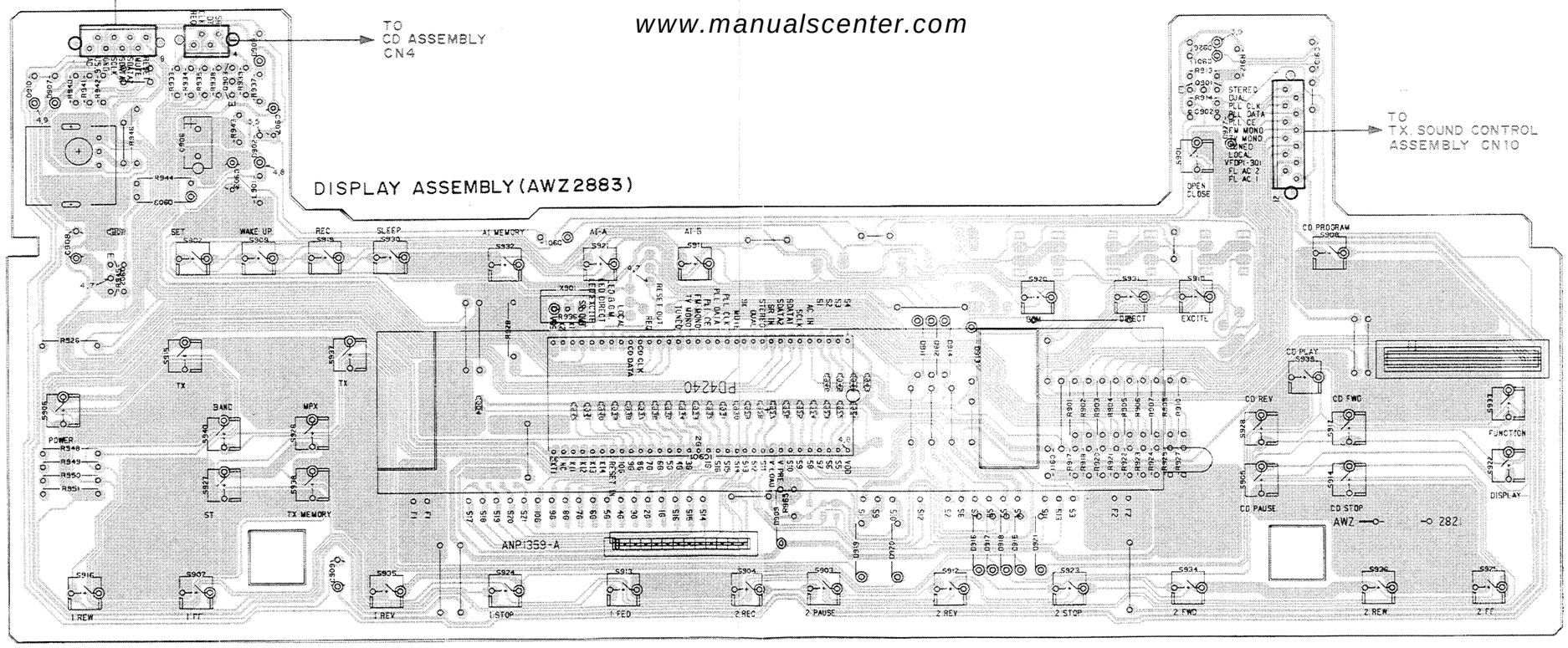

Q903
Q902
IC901
Q901
IC312
Q318
Q319
Q320

6.7 SCHEMATIC DIAGRAM OF AF ASSEMBLY

www.manualscenter.com

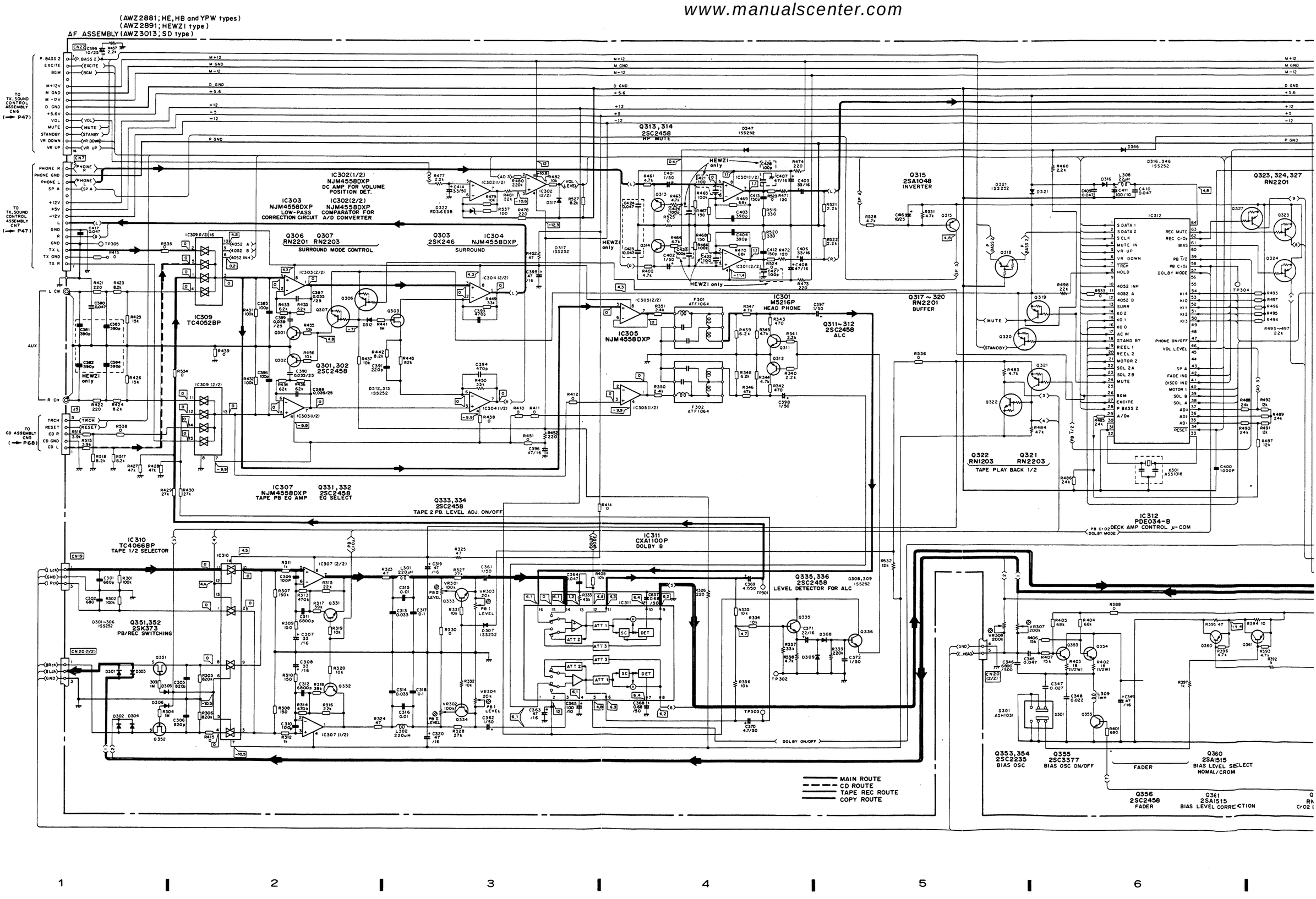

www.manualscenter.com

DISPLAY ASSEMBLY (AWZ2883)

DECK SW ASSEMBLY

DECK II

DECK I

Q323, 324, 327
RN2201

Q373~376 Q377~380
RN2201 2SC3377
INVERTOR BUFFER

Q372
2SA1515
2 MOTOR ON/OFF

Q371
2SA1515
1 MOTOR ON/OFF

IC308
NJM4558DXP
TEAP REC EQ AMP

Q360
2SA1515
BIAS LEVEL SELECT
NOMAL/CROM

Q361
2SA1515
BIAS LEVEL CORRECTION

Q364
RN1201
CrO2 BIAS SETING

Q339,340
2SC2458
EQ SELECT

Q337,338
2SC2787
REC MUTE

Q902
RN1201
RESET

Q901
2SC2458
AC DET

Q903
2SC2458
INVERTER BUFFER

IC901
PD4240-A
TUNER DISPLAY μ-COM

IC312
DE034-B
CONTROL μ-COM

TO TX,SOUND CONTROL ASSEMBLY CN10 (→P47)

TO CD ASSEMBLY CN4 (→P68)

6.8 SCHEMATIC DIAGRAM OF CD ASSEMBLY

www.manualscenter.com

SERVO MECHANISM ASSEMBLY (1/2)

PICK UP ASSEMBLY PEA1030

MAIN BOARD ASSEMBLY PWZ1940

IC1 CXA1081S RF AMP

IC3 CXD1130QZ DECODER

IC6 PD4257 SYSTEM CONTROL

IC17(1/2) TA8410AK LOADING DRIVER

Q1 2SA1399 LD AMP

Q8,Q9 2SC1740S PLL FILTER

Q4 2SC3581 Q5 2SA1399 MUTING

IC6(PD4257) terminal voltages.

1	0	21	5	41	0,5	61	0
2	0	22	0	42	0,4	62	0
3	0	23	5	43	0,4	63	0
4	0	24	5	44	0,4	64	5
5	5	25	5	45	0,5		
6	5	26	0	46	0,5		
7	5	27	5	47	0,5		
8	0	28	5	48	0,5		
9	5	29	0	49	0,5		
10	0	30	2,3	50	-5		
11	5	31	2,5	51	0		
12	5	32	0	52	0		
13	0	33	0	53	-4,8		
14	0	34	5	54	0,8		
15	0	35	5	55	1,1		
16	0	36	5	56	0		
17	2,5	37	0	57	-5		
18	0	38	0	58	0,3		
19	5	39	5	59	0,4		
20	5	40	0,3	60	0		

www.manualscenter.com

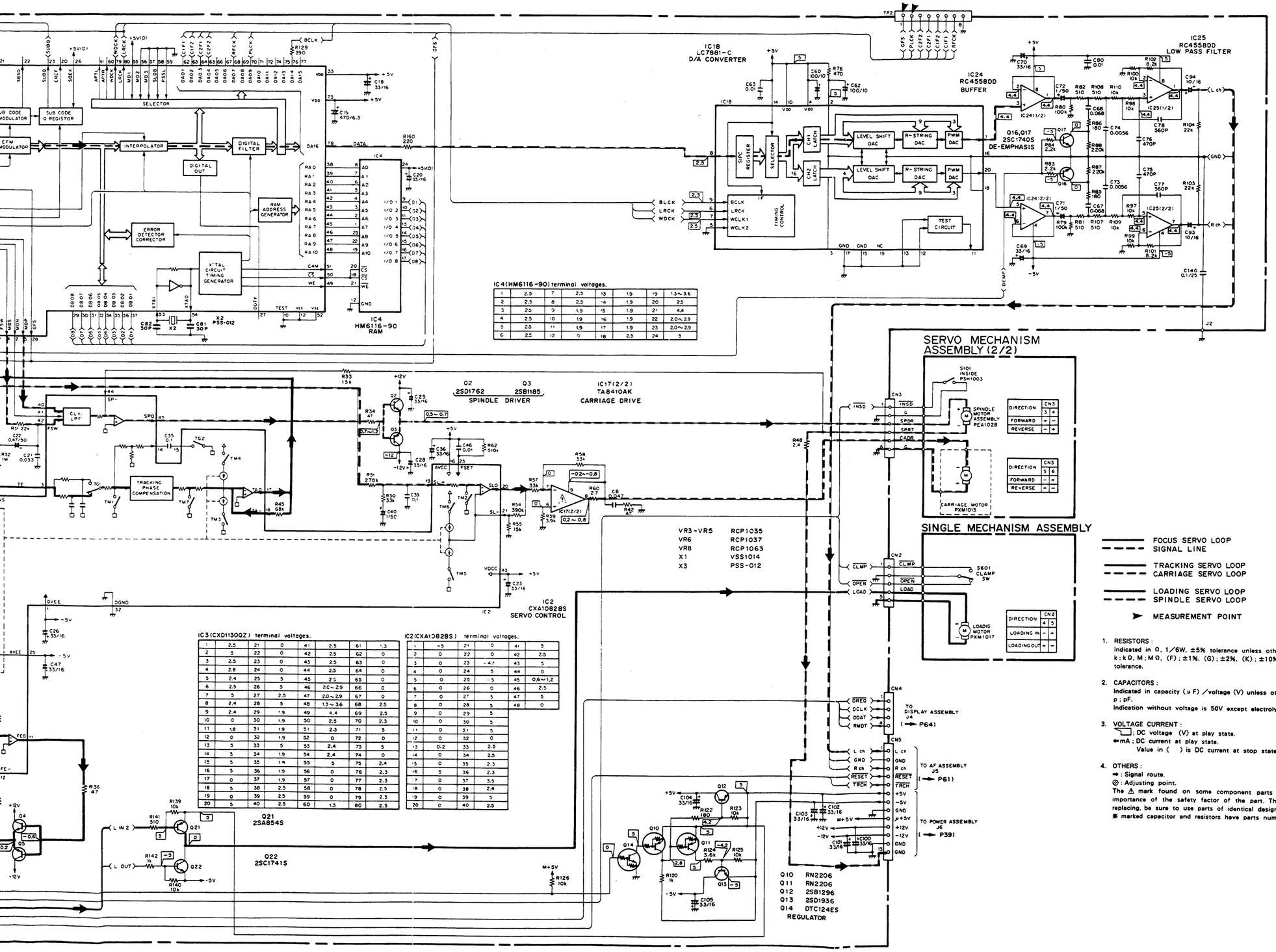

IC4(HM6116-90) terminal voltages.

1	2.5	7	2.5	13	1.9	19	1.3~3.6
2	2.5	8	2.5	14	1.9	20	2.5
3	2.5	9	1.9	15	1.9	21	4.4
4	2.5	10	1.9	16	1.9	22	2.0~2.9
5	2.5	11	1.9	17	1.9	23	2.0~2.9
6	2.5	12	0	18	2.5	24	5

IC3(CXD1130QZ) terminal voltages.

1	2.5	21	0	41	2.5	61	1.3
2	5	22	0	42	2.5	62	0
3	2.5	23	0	43	2.5	63	0
4	2.8	24	0	44	2.5	64	0
5	2.4	25	5	45	2.5	65	0
6	2.5	26	5	46	2.0~2.9	66	0
7	5	27	2.5	47	2.0~2.9	67	0
8	2.4	28	5	48	1.3~3.6	68	2.5
9	2.4	29	1.9	49	4.4	69	2.5
10	0	30	1.9	50	2.5	70	2.3
11	1.8	31	1.9	51	2.3	71	5
12	0	32	1.9	52	0	72	0
13	5	33	5	53	2.4	73	5
14	5	34	1.9	54	2.4	74	0
15	5	35	1.9	55	5	75	2.4
16	5	36	1.9	56	0	76	2.3
17	0	37	1.9	57	0	77	2.3
18	5	38	2.5	58	0	78	2.5
19	0	39	2.5	59	0	79	2.5
20	5	40	2.5	60	1.3	80	2.5

IC2(CXA1082BS) terminal voltages.

1	-5	21	0	41	5
2	0	22	0	42	2.5
3	0	23	-4.1	43	5
4	0	24	5	44	0
5	0	25	-5	45	0.6~1.2
6	0	26	0	46	2.5
7	0	27	5	47	5
8	0	28	5	48	0
9	0	29	5		
10	0	30	5		
11	0	31	5		
12	0	32	0		
13	0.2	33	2.5		
14	0	34	2.5		
15	0	35	2.3		
16	5	36	2.3		
17	0	37	3.5		
18	0	38	2.4		
19	0	39	5		
20	0	40	2.5		

FOCUS SERVO LOOP
SIGNAL LINE
TRACKING SERVO LOOP
CARRIAGE SERVO LOOP
LOADING SERVO LOOP
SPINDLE SERVO LOOP
MEASUREMENT POINT

1. RESISTORS :
   Indicated in Ω, 1/6W, ±5% tolerance unless otherwise noted
   k ; kΩ, M ; MΩ, (F) : ±1%, (G) : ±2%, (K) : ±10%, (M) : ±20% tolerance.
2. CAPACITORS :
   Indicated in capacity (μF) /voltage (V) unless otherwise noted
   p ; pF.
   Indication without voltage is 50V except electrolytic capacitor.
3. VOLTAGE CURRENT :
   ; DC voltage (V) at play state.
   ⇐mA ; DC current at play state.
   Value in ( ) is DC current at stop state.
4. OTHERS :
   ➡ : Signal route.
   ⊘ : Adjusting point.
   The ⚠ mark found on some component parts indicates the importance of the safety factor of the part. Therefore, when replacing, be sure to use parts of identical designation.
   ✱ marked capacitor and resistors have parts numbers.

6.9 P.C. BOARD PATTERN OF CD ASSEMBLY

- View from component side

www.manualscenter.com

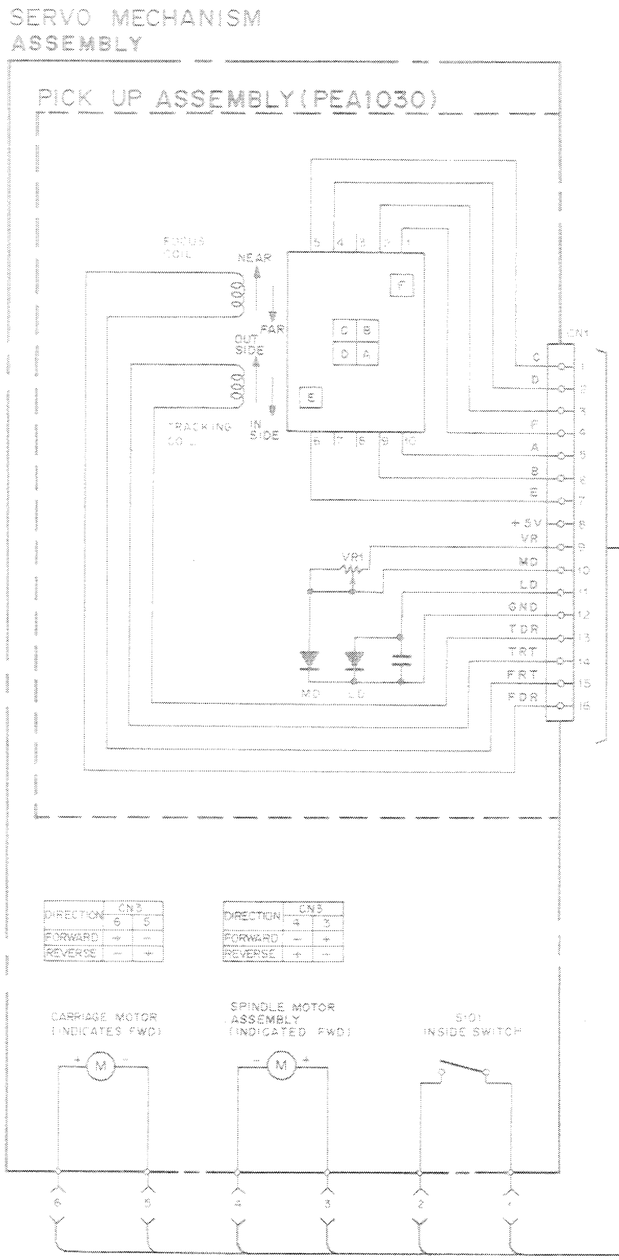

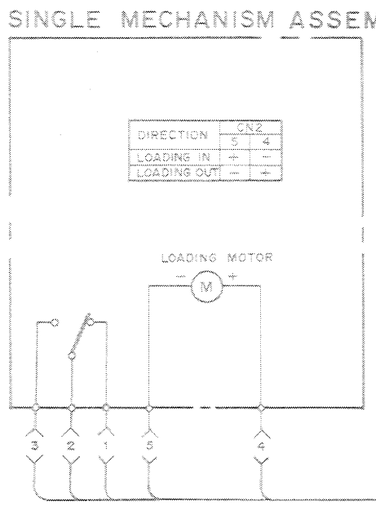

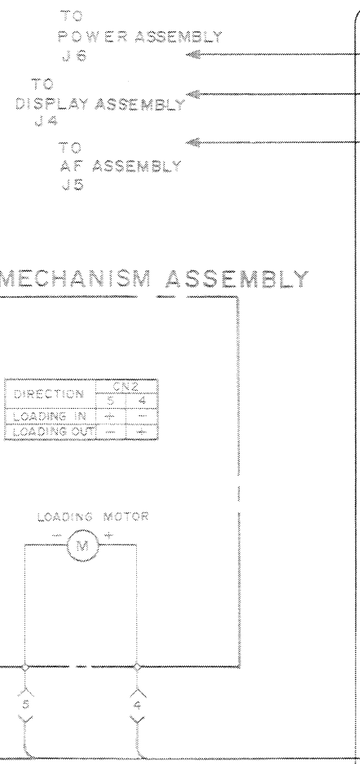

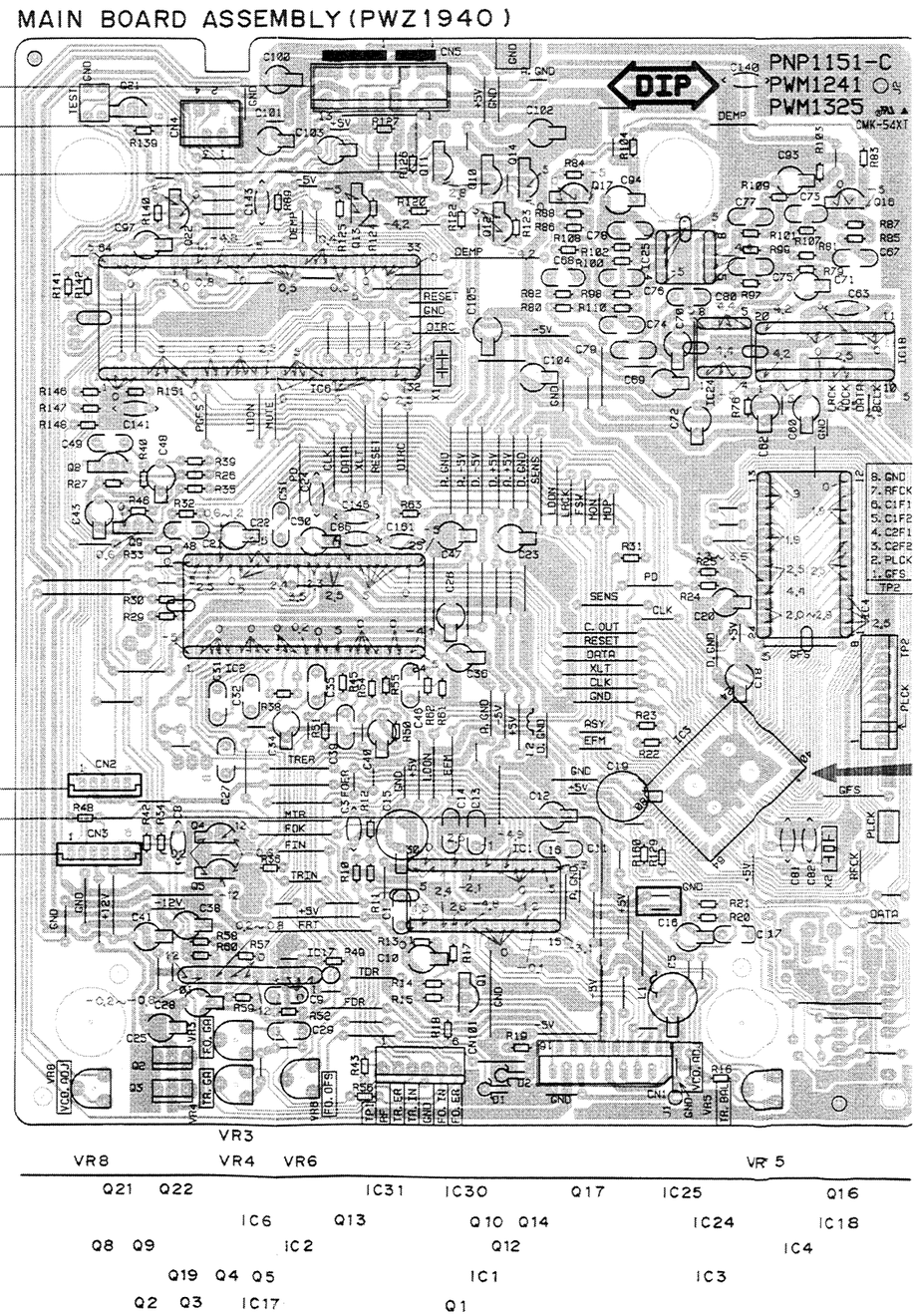

www.manualscenter.com

MAIN BOARD ASSEMBLY (PWZ1940)

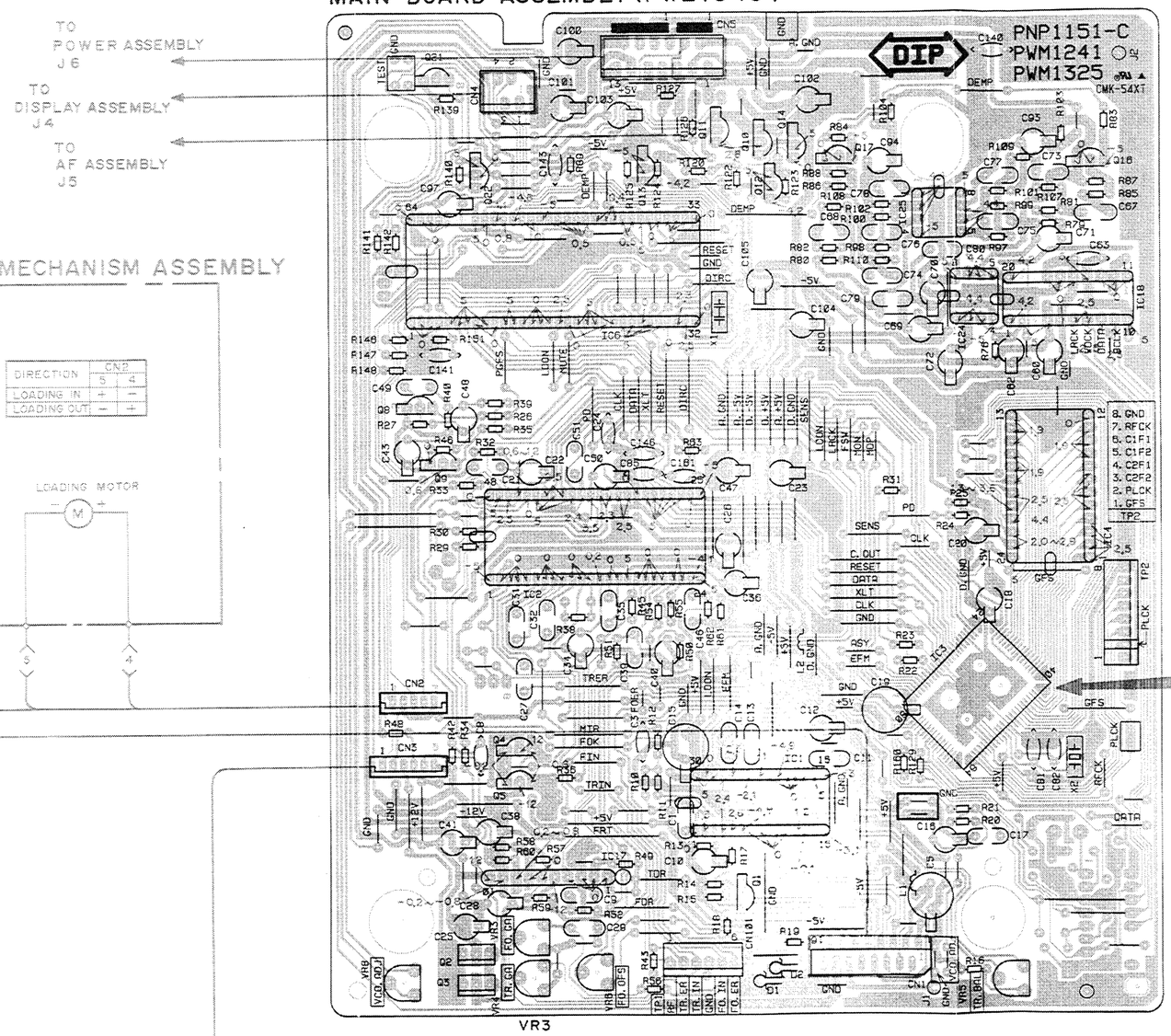

IC3 (CXD1130QZ) TERMINAL VOLTAGE

1	2.5
2	5
3	2.5
4	2.9
5	2.4
6	2.5
7	5
8	2.4
9	0
10	0
11	1.8
12	0
13	
14	5
15	
16	
17	0
18	5
19	0
20	5
21	0
22	0
23	
24	0
25	
26	5
27	2.5
28	5
29	
30	1.9
31	
32	
33	5
34	
35	1.9
36	
37	
38	
39	
40	
41	2.5
42	
43	
44	
45	
46	2.0—2.9
47	
48	1.3—3.6
49	4.4
50	2.5
51	2.3
52	0
53	2.4
54	
55	5
56	
57	0
58	
59	
60	1.3
61	
62	
63	
64	0
65	
66	
67	
68	2.5
69	
70	2.3
71	5
72	0
73	5
74	0
75	2.4
76	2.3
77	
78	
79	2.5
80	

P.C.B. pattern diagram indication	Corresponding part symbol	Part name
		Transistor
		FET
		Diode
		Zenner diode
		LED
		Varactor
		Tact switch
		Inductor
		Coil
		Transformer
		Filter
		Ceramic capacitor
		Mylar capacitor
		Styrol capacitor
		Electrolytic capacitor (Non polarized)
		Electrolytic capacitor (Noiseless)
		Electrolytic capacitor (Polarized)
		Electrolytic capacitor (Polarized)
		Power capacitor
		Semi-fixed resistor
		Resistor array
		Resistor
		Resonator
		Thermistor

1. This P.C.B. connection diagram is viewed from the parts mounted side.
2. The parts which have been mounted on the board can be replaced with those shown with the corresponding wiring symbols listed in the above Table.
3. The capacitor terminal marked with ▭ shows negative terminal.
4. The diode marked with ○ shows cathode side.
5. The transistor terminal marked with ▭ shows emitter.

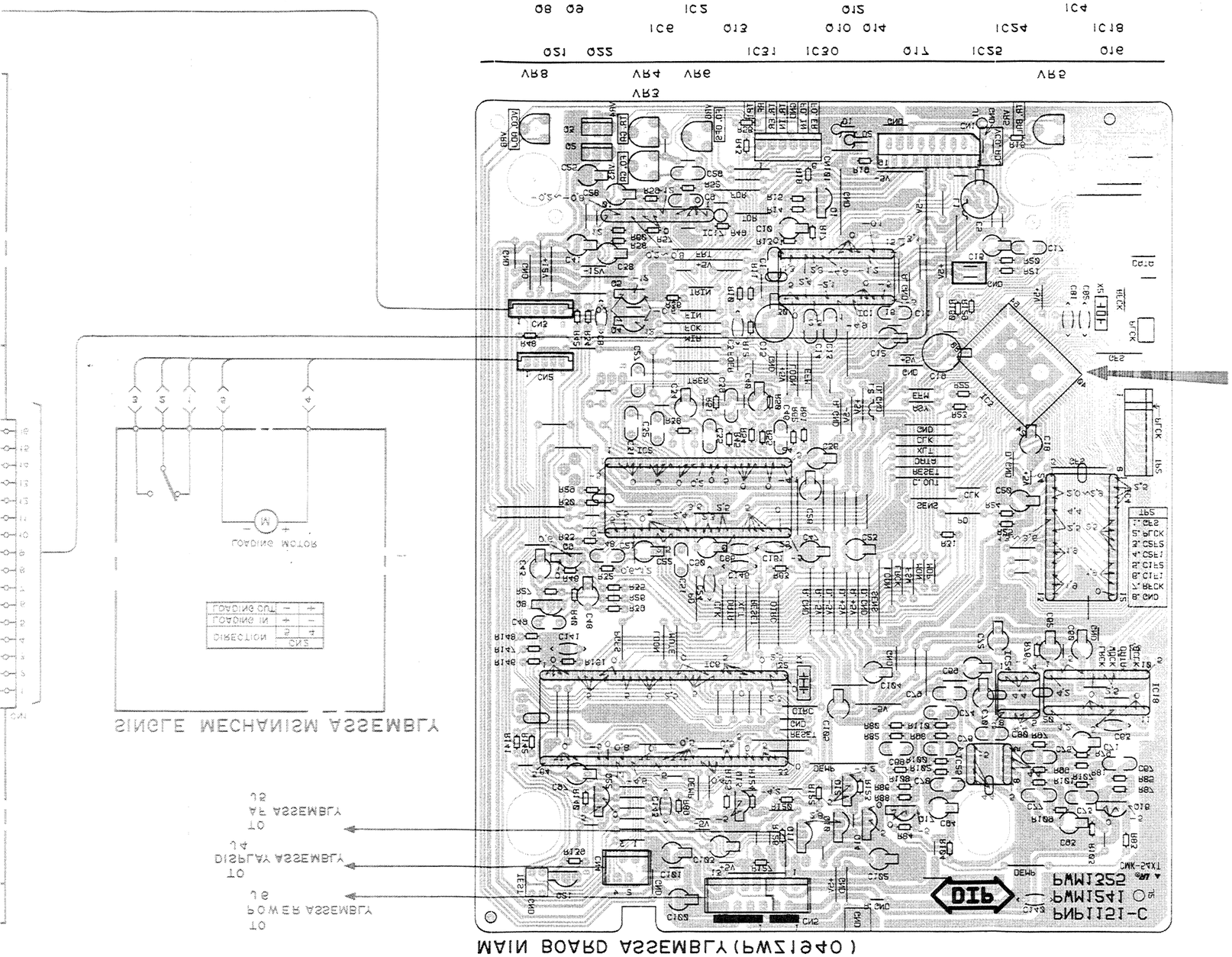

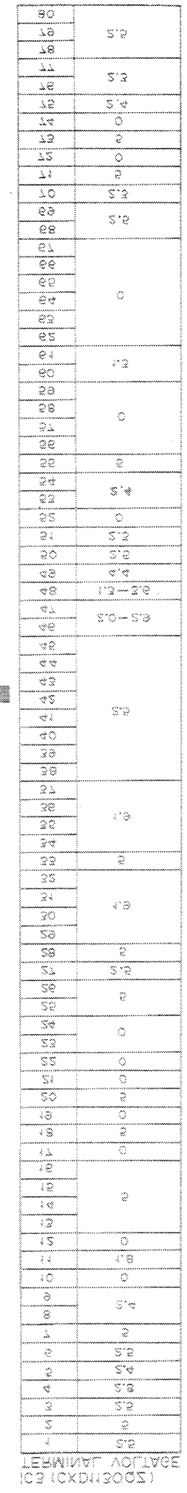

www.manualscenter.com

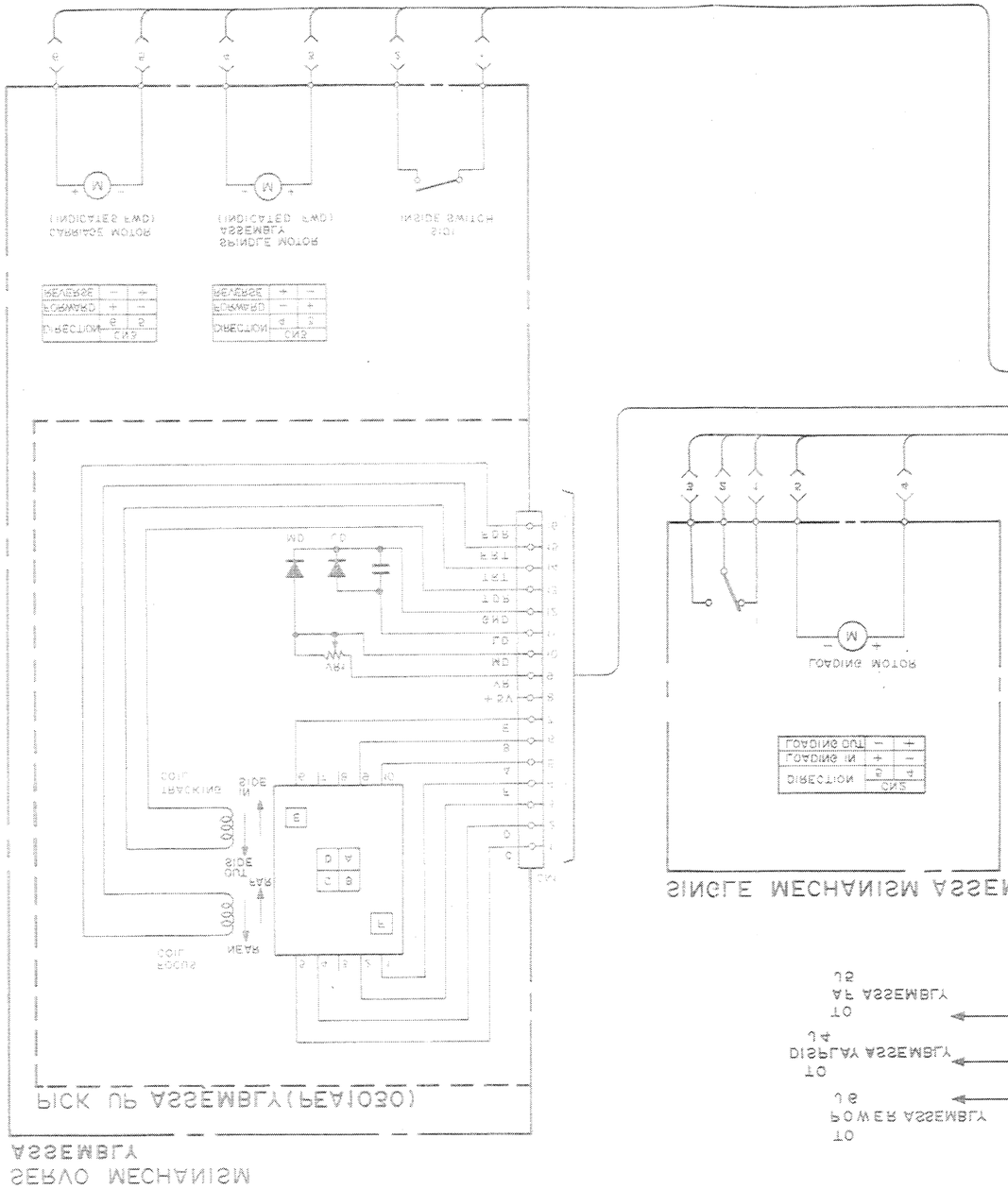

www.manualscenter.com

6.6 P.C. BOARD PATTERN OF CD ASSEMBLY

• View from soldering side

Wave Forms

NOTE : The encircled numbers denote measuring points in the schematic diagram.

①

③ TP1-6 Pin : SEARCH MODE
500mV/div 10msec/div

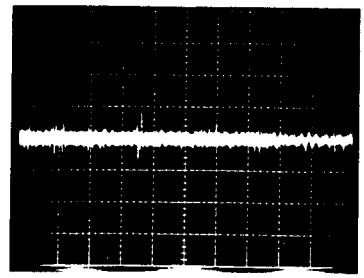

⑥ IC17-1 Pin : PLAY MODE
2V/div 10msec/div

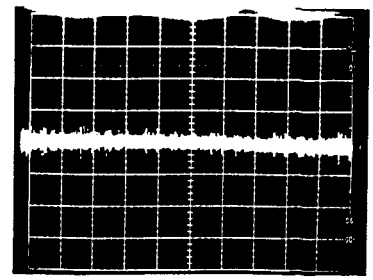

①

④ TP1-2 Pin : PLAY MODE
1V/div 10msec/div

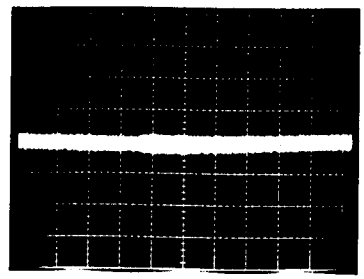

⑥ IC17-1 Pin : SEARCH MODE
2V/div 10msec/div

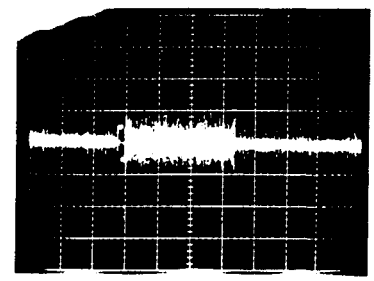

② TP1-1 Pin : PLAY MODE
500mV/div 500nsec/div

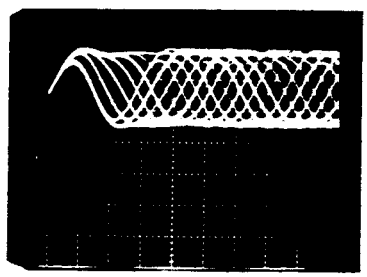

④ TP1-2 Pin : SEARCH MODE
1V/div 10msec/div

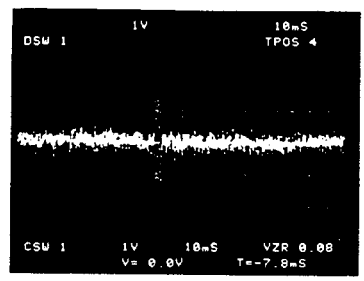

⑦ Q2 Emitter : PLAY MODE
2V/div 50msec/div

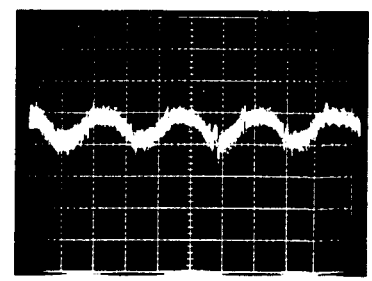

② TP1-1 Pin : SEARCH MODE
500mV/div 200μsec/div

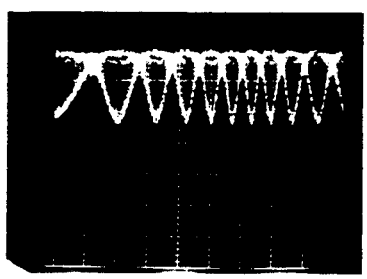

⑤ Q4 Emitter : PLAY MODE
2V/div 10msec/div

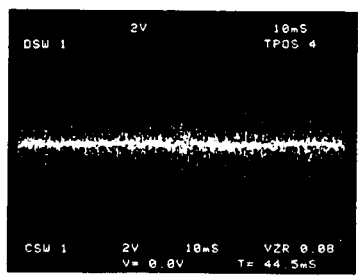

⑦ Q2 Emitter : SEARCH MODE
2V/div 100msec/div

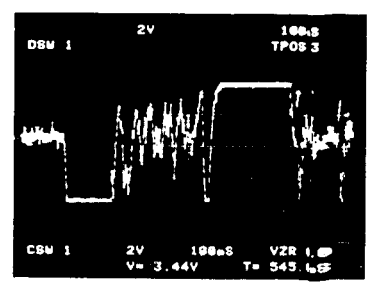

③ TP1-6 Pin : PLAY MODE
500mV/div 10msec/div

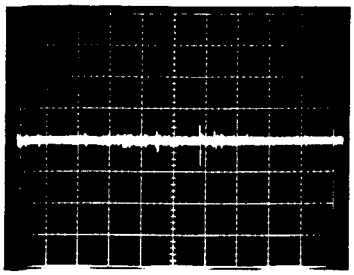

⑤ Q4 Emitter : SEARCH MODE
2V/div 10msec/div

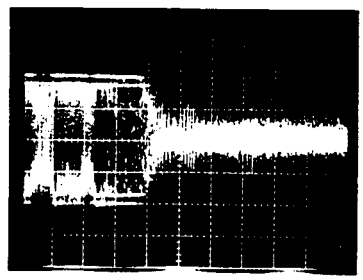

⑧ IC2-33, 34 Pin : PLAY MODE
2V/div 10msec/div

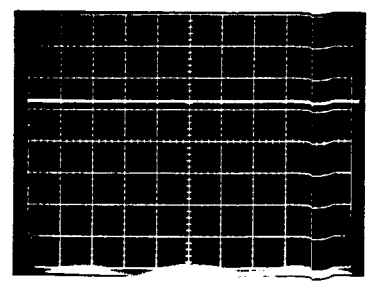

www.manualscenter.com

⑨ IC1-27 Pin : PLAY MODE
2V/div 500nsec/div

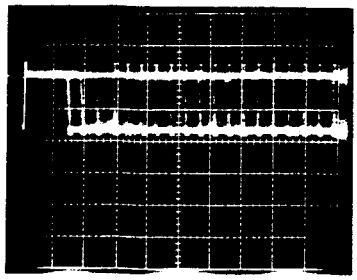

⑫ TP2-1 Pin : PLAY MODE
2V/div 200μsec/div

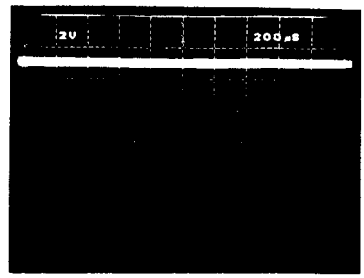

⑯ IC3-76 Pin : STOP MODE
2V/div 200nsec/div

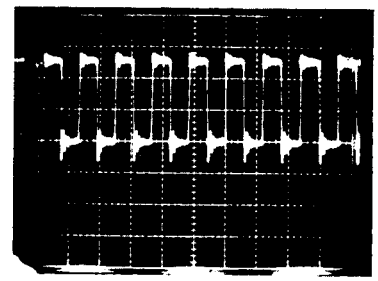

⑩ IC3-4 Pin : PLAY MODE
2V/div 50μsec/div

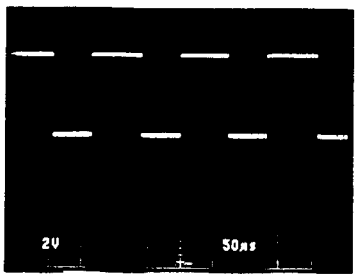

⑫ TP2-1 Pin : SEARCH MODE
2V/div 20msec/div

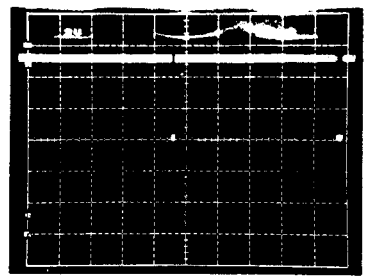

⑰ IC3-79 Pin : STOP MODE
2V/div 5μsec/div

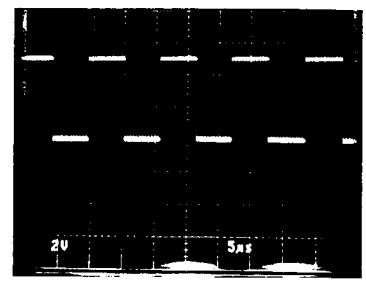

⑩ IC3-4 Pin : SEARCH MODE
2V/div 100msec/div

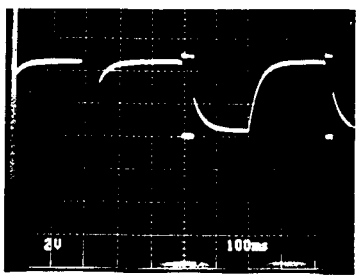

⑬ IC2-38 Pin : PLAY MODE
2V/div 200nsec/div

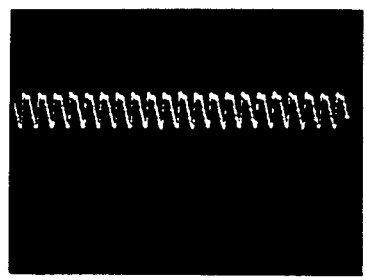

⑱ IC3-80 Pin : STOP MODE
2V/div 5μsec/div

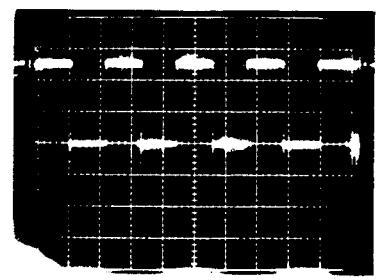

⑪ IC3-3 Pin : PLAY MODE
2V/div 200μsec/div

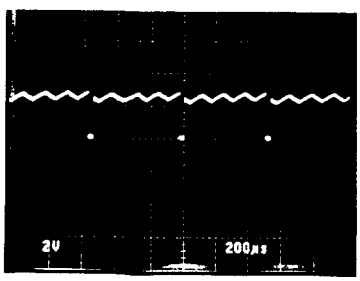

⑭ IC3-8 Pin : PLAY MODE
2V/div 200nsec/div

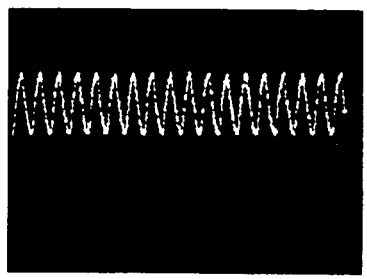

⑪ IC3-3 Pin : SEARCH MODE
2V/div 10msec/div

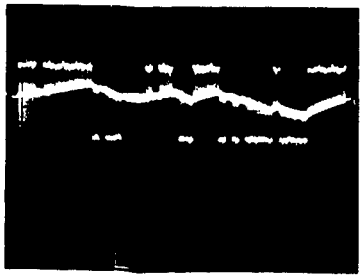

⑮ TP2-2 Pin : PLAY MODE
2V/div 200nsec/div

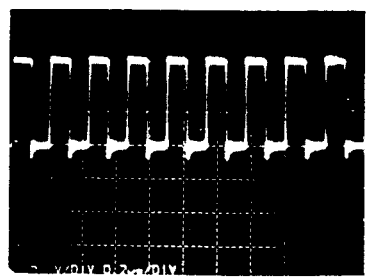

www.manualscenter.com

⑲ IC3-78 Pin : PLAY MODE
2V/div 50μsec/div

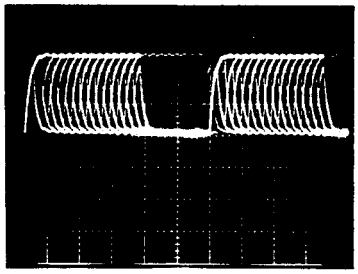

⑳

㉑ OUTPUT Lch : PLAY MODE
2V/div 50μsec/div

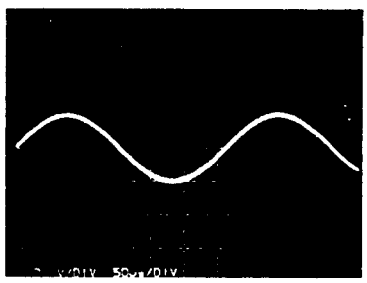

㉒

㉒

㉓ IC1-22 Pin : TRACKING OPEN
0.1msec/div
Upper TP1-1 Pin : 1V/div
Lower IC1-22 Pin : 2V/div

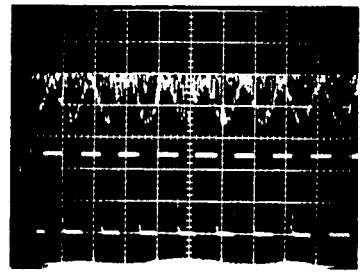

㉔ IC1-21 Pin : DFCT 0.5msec/div
Upper TP1-1 Pin : 1V/div
Lower IC1-21 Pin : 5V/div

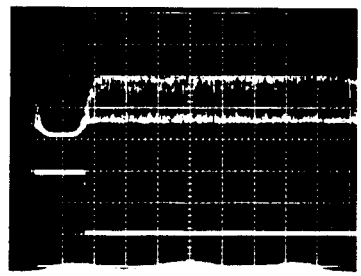

www.manualscenter.com

7. P.C.B's PARTS LIST

NOTES:

- Parts without part number cannot be supplied.
- Parts marked by "⊙" are not always kept in stock. Their delivery time may be longer than usual or they may be unavailable.
- The ⚠ mark found on some component parts indicates the impotance of the safety factor of the part. Therefore, when replacing, be sure to use parts of identical designation.
- When ordering resistors, first convert resistance values into code form as shown in the following examples.

Ex.1 When there are 2 effective digits (any digit apart from 0), such as 560 ohm and 47k ohm (tolerance is shown by J=5%, and K=10%)

560 Ω → 56 × 10^1 → 561 ····· RD1/4PS 5 6 1 J
47k Ω → 47 × 10^3 → 473 ····· RD1/4PS 4 7 3 J
0.5 Ω → 0R5 ····· RN2H 0 R 5 K
1 Ω → 010 ····· RS1P 0 1 0 K

Ex.2 When there are 3 effective digits (such as in high precision metal film resistors).

5.62k Ω → 562 × 10^1 → 5621 ····· RN1/4SR 5 6 2 1 F

Mark	No.	Symbol & Description	Part No.
TX.SOUND CTRL ASSEMBLY(AWM1248)			
SEMICONDUCTORS			
	IC601		TA7291S
	IC602-604		NJM4558DXP
	IC605	E-VR IC	M5222L
	IC606		NJM4558DXP
	IC607	E-VR IC	M5222L
	IC608-610		NJM4558DXP
	IC611		TC4066BP
	IC612-614		NJM4558DXP
	IC811		LA1265S
	IC831		LM7001
	IC851		AN7470P
	Q601, 602	TRANSISTOR	2SC2458
	Q604	TRANSISTOR	2SC2458
	Q605, 606	TRANSISTOR	RN2203
	Q607	TRANSISTOR	RN2201
	Q609	TRANSISTOR	2SC2235
	Q801	TRANSISTOR	2SC2668
	Q802, 803	TRANSISTOR	RN2201
	Q804	TRANSISTOR	RN1203
	Q831	N-FET	2SK246
	Q832	TRANSISTOR	2SC1740SLN
	Q851	TRANSISTOR	2SC1740S
	D601-606	DIODE	1SS252
	D607	ZENER DIODE	RD5. 6ESB
	D811	DIODE	1SS252
	D813-815	DIODE	1SS252
COILS/FILTERS			
	L801	AXIAL INDUCTOR	LAU2R2M
	L811	COIL	ATE-079
	L831	AXIAL INDUCTOR	LAU2R2M
	F801, 802	CERAMIC FILTER	ATF-126
	F803	CERAMIC FILTER	ATF-208
CAPACITORS			
	C601, 602	CERAMIC CAPACITOR	CKCYF473Z50
	C603, 604	CERAMIC CAPACITOR	CKSQYB182K50
	C605, 606	CERAMIC CAPACITOR	CKSQYB332K50
	C607, 608	CERAMIC CAPACITOR	CKSQYB681K50
	C609, 610	CERAMIC CAPACITOR	CKSQYB153K50
	C611, 612	ELECTR. CAPACITOR	CEAS220M16
	C613, 614	ELECTR. CAPACITOR	CEAS2R2M50
	C617	CERAMIC CAPACITOR	CKSQYB182K50
	C618	CERAMIC CAPACITOR	CKSQYB332K50
	C619	AUDIO FILM CAPACITOR	CFTXA104J50
	C620	AUDIO FILM CAPACITOR	CFTXA474J50
	C621	CERAMIC CAPACITOR	CKSQYB103K50
	C622	ELECTR. CAPACITOR	CEAS0R1M50
	C623	CERAMIC CAPACITOR	CKCYX104M25
	C624	CERAMIC CAPACITOR	CQMA223J50
	C625	AUDIO FILM CAPACITOR	CFTXA474J50
	C626	CERAMIC CAPACITOR	CKCYF473Z50
	C627	ELECTR. CAPACITOR	CEAS470M16
	C628	ELECTR. CAPACITOR	CEASR68M50
	C629	ELECTR. CAPACITOR	CEAS470M16
	C630	ELECTR. CAPACITOR	CEASR68M50
	C631, 632	ELECTR. CAPACITOR	CEAS4R7M50
	C633	CERAMIC CAPACITOR	CKSQYB472K50
	C634	ELECTR. CAPACITOR	CEAS220M16
	C635-640	ELECTR. CAPACITOR	CEAS470M16
	C641	CERAMIC CAPACITOR	CKCYX104M25
	C642	ELECTR. CAPACITOR	CEAS330M16
	C643	ELECTR. CAPACITOR	CEAS470M16
	C644	ELECTR. CAPACITOR	CEAS100M25
	C645-648	ELECTR. CAPACITOR	CEAS2R2M50
	C803, 804		CKSQYF103Z50
	C805		CKSQYF223Z50
	C807	ELECTR. CAPACITOR	CEAS330M16
	C811, 812		CKSQYF223Z50
	C813	ELECTR. CAPACITOR	CEAS330M16
	C814	CERAMIC CAPACITOR	CKSQYF473Z50
	C815		CKSQYF103Z50
	C816	ELECTR. CAPACITOR	CEAS010M50
	C817	CERAMIC CAPACITOR	CCSQSL331J50
	C819	ELECTR. CAPACITOR	CEAS100M50
	C806		CKSQYB473K50

www.manualscenter.com

Mark	No.	Symbol & Description	Part No.
	C820	ELECTR. CAPACITOR	CEAS2R2M50
	C821	CERAMIC CAPACITOR	CKCYB222K50
	C822	CERAMIC CAPACITOR	CKCYX473M25
	C823	ELECTR. CAPACITOR	CEAS4R7M50
	C824	ELECTR. CAPACITOR	CEAS470M10
	C825		CKSQYF103Z50
	C827	CERAMIC CAPACITOR	CKCYX223M25
	C831, 832	CERAMIC CAPACITOR	CCSQCH150J50
	C833, 834		CKSQYF103Z50
	C835		CCSQSL470J50
	C836	ELECTR. CAPACITOR	CEAS330M16
	C837	AUDIO FILM CAPACITOR	CFTXA224J50
	C838	CERAMIC CAPACITOR	CKCYF103Z50
	C839	ELECTR. CAPACITOR	CEAS470M10
	C851	ELECTR. CAPACITOR	CEANP4R7M35
	C852	CERAMIC CAPACITOR	CKSQYF473Z50
	C853, 854		CKSQYB102K50
	C855, 856	ELECTR. CAPACITOR	CEAS4R7M50
	C857	CERAMIC CAPACITOR	CKCYB472K50
	C858, 859	ELECTR. CAPACITOR	CEAS470M16
	C860		CKSQYF103Z50
	C861	ELECTR. CAPACITOR	CEASR22M50
	C862	ELECTR. CAPACITOR	CEAS1R5M50
	C863	ELECTR. CAPACITOR	CEAS3R3M50
	C864		ACE1039
	C865	ELECTR. CAPACITOR	CEAS010M50
	C868	CERAMIC CAPACITOR	CKCYB472K50
	C871	ELECTR. CAPACITOR	CEAS100M50
RESISTORS			
	R601, 602	CARBONFILM RESISTOR	RD1/8PM□□□J
	R603-636		RS1/10S□□□J
	R637	CARBONFILM RESISTOR	RD1/8PM□□□J
	R641, 642		RS1/10S□□□J
	R643	CARBONFILM RESISTOR	RD1/8PM□□□J
	R644-648		RS1/10S□□□J
	R650-654		RS1/10S□□□J
	R655	CARBONFILM RESISTOR	RD1/8PM□□□J
	R656		RS1/10S□□□J
	R657, 658	CARBONFILM RESISTOR	RD1/8PM□□□J
	R659-666		RS1/10S□□□J
	R668-674		RS1/10S□□□J
	R675	CARBONFILM RESISTOR	RD1/8PM□□□J
	R676-680		RS1/10S□□□J
	R681-686	CARBONFILM RESISTOR	RD1/4PM□□□J
	R687	CARBONFILM RESISTOR	RD1/8PM□□□J
	R688		RS1/10S□□□J
	R689	METAL OXIDE RESISTOR	RS2LMF□□□J
	R690	CARBONFILM RESISTOR	RD1/4PM□□□J
	R692, 693		RS1/10S□□□J
	R695	CARBONFILM RESISTOR	RD1/8PM□□□J
	R702		RS1/10S□□□J
	R705, 706		RS1/10S□□□J
	R708-718		RS1/10S□□□J
	R721-727		RS1/10S□□□J
	R802-806		RS1/10S□□□J
	R807	CARBONFILM RESISTOR	RD1/8PM□□□J
	R808		RS1/10S□□□J
	R809, 810	CARBONFILM RESISTOR	RD1/8PM□□□J
	R811, 812		RS1/10S□□□J
	R813	CARBONFILM RESISTOR	RD1/8PM□□□J
	R814, 815		RS1/10S□□□J
	R816	CARBONFILM RESISTOR	RD1/8PM□□□J
	R817		RS1/10S□□□J
	R819		RS1/10S□□□J
	R822		RS1/10S□□□J
	R823, 824	CARBONFILM RESISTOR	RD1/8PM□□□J
	R825		RS1/10S□□□J
	R831-833	CARBONFILM RESISTOR	RD1/8PM□□□J
	R834-836		RS1/10S□□□J
	R837	CARBONFILM RESISTOR	RD1/8PM□□□J
	R838, 839		RS1/10S□□□J
	R841		RS1/10S□□□J
	R851-862		RS1/10S□□□J
	R864	CARBONFILM RESISTOR	RD1/8PM□□□J
	R865, 866		RS1/10S□□□J
	VR601		ACX1036
	VR801	VR	VRTB6VS223
	VR802	VR	VRTB6VS472
	VR851	VR	VRTB6VS472
OTHERS			
	ANTENNA TERMINAL 4-P		AKA1010
	PLUG 9-P		AKM-078
	PLUG 12-P		AKM-079
	PLUG 15-P		AKM-080
	PLUG 14-P		AKM1048
	CN10		KPE12
	F. E MODULE ASSEMBLY		AXQ1002
	AM. RF. TURNING BLOCK		AXX1011
	X801		ATF1027
	X831	CRYSTAL RESONATOR	ASS1005

⊙ DISPLAY ASSEMBLY(AWZ2883)

SEMICONDUCTORS			
	IC901		PD4240-A
	Q901	TRANSISTOR	2SC2458
	Q902	TRANSISTOR	RN1201
	Q903	TRANSISTOR	2SC2458
	D901-903	DIODE	1SS252
	D907, 908	DIODE	1SS252
	D909	ZENER DIODE	RD9.1ESB
	D910-921	DIODE	1SS252
	D926, 927	DIODE	1SS252
SWITCHES			
	S901-917	SWITCH	ASG1034
	S919-928	SWITCH	ASG1034
	S930-940	SWITCH	ASG1034
COILS			
	L901	AXIAL INDUCTOR	LAU220K

www.manualscenter.com

Mark	No.	Symbol & Description	Part No.
CAPACITORS			
	C901	ELECTR. CAPACITOR	CEJA100M35
	C902	CERAMIC CAPACITOR	CKDYB102K50
	C903	ELECTR. CAPACITOR	CEAS470M16
	C904, 905	CERAMIC CAPACITOR	CKSQYF473Z50
	C906	CEA (47000/5.5V)	ACH1037
	C907	ELECTR. CAPACITOR	CEAS470M16
	C908	ELECTR. CAPACITOR	CEJA4R7M35
	C909	ELECTR. CAPACITOR	CEJA220M35
	C910, 911	CERAMIC CAPACITOR	ACG1022
	C921-946		CCSQCH101J50
RESISTORS			
	R901-907	CARBONFILM RESISTOR	RD1/8PM□□□J
	R909, 910	CARBONFILM RESISTOR	RD1/8PM□□□J
	R912-914	CARBONFILM RESISTOR	RD1/8PM□□□J
	R917, 918	CARBONFILM RESISTOR	RD1/8PM□□□J
	R920-928	CARBONFILM RESISTOR	RD1/8PM□□□J
	R933-935	CARBONFILM RESISTOR	RD1/8PM□□□J
	R937-946	CARBONFILM RESISTOR	RD1/8PM□□□J
	R948-951	CARBONFILM RESISTOR	RD1/8PM□□□J
	R955	CARBONFILM RESISTOR	RD1/8PM□□□J
	R963-969		RS1/10S□□□J
OTHERS			
		REMOTE RECEIVER UNIT	AXX1010
	V901	FL TUBE	AAV1092
	X901		ASS1018

DECK SW ASSEMBLY

Mark	No.	Symbol & Description	Part No.
SEMICONDUCTORS			
	D972	LED	AEL1091
SWITCHES			
	S971	SLIDE SWITCH	ASH1019
	S972	SWITCH	ASG1034
	S975	SWITCH	ASG1034
RESISTORS			
	R972	CARBONFILM RESISTOR	RD1/8PM□□□J
OTHERS			
		JACK	AKN1007

⊙ POWER ASSEMBLY(AWZ2880)

Mark	No.	Symbol & Description	Part No.
SEMICONDUCTORS			
	IC201		STK4142-2GP
	IC202		UPC7812AHF
	IC203		NJM7912FA
	IC204	REGULATOR IC	NJM78M05FA
	IC205	REGULATOR IC	NJM79M05FA
	IC206		UPC7812AHF
	IC207		NJM7912FA
	IC208		NJM78M56FA
	IC209-211	IC PROTECTOR	ICP-N38
	IC212, 213	IC PROTECTOR	ICP-N10
	Q201	TRANSISTOR	2SA1515
	Q202	TRANSISTOR	2SC3377
	Q203	TRANSISTOR	RN1201
	Q204	TRANSISTOR	RN2201
	Q205	TRANSISTOR	2SB560
	Q206, 207	TRANSISTOR	RN1203
	Q208-212	TRANSISTOR	2SC2458
	Q213	TRANSISTOR	2SA1048
	Q217	TRANSISTOR	2SA1515
	D201	DIODE	D3SBA20
	D202-209	DIODE	S5566
	D212, 213	DIODE	S5566
	D215	ZENER DIODE	RD30ESB
	D216	ZENER DIODE	RD8.2ESB
	D217, 218	DIODE	1SS252
	D223	DIODE	1SS252
	D224	DIODE	S5566
RELAYS			
	RY201	RELAY	ASR1005
COILS			
	L201, 202	COIL	ATH-133
CAPACITORS			
	C203, 204	CERAMIC CAPACITOR	CCCSL101J50
	C205, 206	ELECTR. CAPACITOR	CEAS220M50
	C207, 208	ELECTR. CAPACITOR	CEAS101M25
	C209	ELECTR. CAPACITOR	CEANP220M50
	C210	ELECTR. CAPACITOR	CEANP100M50
	C211	ELECTR. CAPACITOR	CEANP470M50
	C212, 213	ELECTR. CAPACITOR	CEAS100M50
	C214, 215	ELECTR. CAPACITOR(2200/42)	ACH1109
	C216	ELECTR. CAPACITOR	CEAS221M10
	C217-220	MYLOR FILM CAPACITOR	CQMA104K50
	C222	ELECTR. CAPACITOR	CEAS100M50
	C223	ELECTR. CAPACITOR	CEHAQ222M35
	C224	ELECTR. CAPACITOR	CEHAQ102M35
	C225-230	ELECTR. CAPACITOR	CEHAQ100M50
	C231	ELECTR. CAPACITOR	CEHAQ102M35
	C232	ELECTR. CAPACITOR	CEAS471M35
	C233, 234	ELECTR. CAPACITOR	CEHAQ100M50
	C238	ELECTR. CAPACITOR	CEANP331M50
	C239	ELECTR. CAPACITOR	CEHAQ220M2A
	C240, 241	ELECTR. CAPACITOR	CEHAQ470M50
	C242	ELECTR. CAPACITOR	CEHAQ102M16
	C243	ELECTR. CAPACITOR	CEHAQ100M50
	C244	ELECTR. CAPACITOR	CEAS100M50
	C245	CAPACITOR (CERAMIC)	ACG-009
RESISTORS			
	R201-208	CARBONFILM RESISTOR	RD1/8PM□□□J
	R209-212	CARBONFILM RESISTOR	RD1/4PM□□□J
	R213-215	CARBONFILM RESISTOR	RD1/4PMFL□□□J
	R216, 217	CARBONFILM RESISTOR	RD1/4PM□□□J
	R218-220	CARBONFILM RESISTOR	RD1/4PMFL□□□J
	R221, 222	CARBONFILM RESISTOR	RD1/4PM□□□J
	R223-226	CARBONFILM RESISTOR	RD1/8PM□□□J
	R227, 228	METAL OXIDE RESISTOR	RS2LMF□□□J
	R229-233	CARBONFILM RESISTOR	RD1/8PM□□□J
	R234	CARBONFILM RESISTOR	RD1/4PM□□□J

www.manualscenter.com

Mark	No.	Symbol & Description	Part No.
		R235, 236 CARBONFILM RESISTOR	RD1/8PM□□□J
		R237 METAL OXIDE RESISTOR	RS2LMF□□□J
		R244, 245 CARBONFILM RESISTOR	RD1/8PM□□□J
		R246 METAL OXIDE RESISTOR	RS2LMF□□□J
		R247 CARBONFILM RESISTOR	RD1/8PM□□□J
		R248 METAL OXIDE RESISTOR	RS2LMF□□□J
		R250, 251 METAL OXIDE RESISTOR	RS2LMF□□□J
		R252 CARBONFILM RESISTOR	RD1/8PM□□□J
		R254 CARBONFILM RESISTOR	RD1/4PM□□□J
		R255 CARBONFILM RESISTOR	RD1/8PM□□□J
		R256 METAL OXIDE RESISTOR	RS2LMF□□□J
		R257-260 CARBONFILM RESISTOR	RD1/2PM□□□J
OTHERS			
		SPEAKER TERMINAL 4-P	AKE1012
		SOCKET 9-P	AKP-046
		SOCKET 12-P	AKP-047
		SCREW	BBZ30P080FZK

⊙ AF ASSEMBLY(AWZ2881)

SEMICONDUCTORS			
		IC301	M5216P
		IC302-305	NJM4558DXP
		IC307, 308	NJM4558DXP
		IC309	TC4052BP
		IC310	TC4066BP
		IC311	CXA1100P
		IC312	PDE034-B
		Q301, 302 TRANSISTOR	2SC2458
		Q303 N-FET	2SK246
		Q306 TRANSISTOR	RN2201
		Q307 TRANSISTOR	RN2203
		Q311-314 TRANSISTOR	2SC2458
		Q315 TRANSISTOR	2SA1048
		Q318-320 TRANSISTOR	RN2201
		Q321 TRANSISTOR	RN2203
		Q322 TRANSISTOR	RN1203
		Q323, 324 TRANSISTOR	RN2201
		Q326 TRANSISTOR	2SC2458
		Q327 TRANSISTOR	RN2201
		Q331-336 TRANSISTOR	2SC2458
		Q337, 338 TRANSISTOR	2SC2878
		Q339, 340 TRANSISTOR	2SC2458
		Q351, 352 N-FET	2SK373
		Q353, 354 TRANSISTOR	2SC2235
		Q355 TRANSISTOR	2SC3377
		Q360, 361 TRANSISTOR	2SA1515
		Q364 TRANSISTOR	RN1201
		Q371, 372 TRANSISTOR	2SA1515
		Q373-376 TRANSISTOR	RN2201
		Q377-380 TRANSISTOR	2SC3377
		D301-309 DIODE	1SS252
		D312 DIODE	1SS252
		D316-321 DIODE	1SS252
		D322 ZENER DIODE	RD3. 6ESB
		D331-344 DIODE	1SS252
		D346, 347 DIODE	1SS252
		D348 ZENER DIODE	RD5. 6ESB
SWITCHES			
		S301 SLIDE SWITCH	ASH1031
COILS/FILTERS			
		L301, 302 AXIAL INDUCTOR	LAU221K
		L303, 304 INDUCTOR	LTA822J
		L305 INDUCTOR	LTA102J
		L306, 307 INDUCTOR	LTA392J
		L308 AXIAL INDUCTOR	LAU220K
		L309 INDUCTOR	LTA102J
		F301, 302	ATF1064
CAPACITORS			
		C301, 302 CERAMIC CAPACITOR	CKSQYB681K50
		C305, 306 CERAMIC CAPACITOR	CKSQYB821K50
		C307, 308 ELECTR. CAPACITOR	CEAS330M16
		C309, 310	CCSQCH101J50
		C311, 312	CKSQYB682K50
		C313, 314 CERAMIC CAPACITOR	CKSQYB333K50
		C315, 316 CERAMIC CAPACITOR	CKSQYB103K50
		C317, 318 CERAMIC CAPACITOR	CKSQYF104Z50
		C319, 320 ELECTR. CAPACITOR	CEAS470M16
		C321, 322 ELECTR. CAPACITOR	CEAS4R7M50
		C323, 324 ELECTR. CAPACITOR	CEAS010M50
		C325, 326 CERAMIC CAPACITOR	CKSQYB153K50
		C327, 328 CERAMIC CAPACITOR	CKSQYB123K50
		C329, 330 ELECTR. CAPACITOR	CEAS330M16
		C331, 332 ELECTR. CAPACITOR	CEAS470M16
		C333, 334	CKSQYB392K50
		C335, 336 CERAMIC CAPACITOR	CKDYX393M25
		C337, 338 ELECTR. CAPACITOR	CEAS2R2M50
		C339, 340 CERAMIC CAPACITOR	CKSQYB681K50
		C341, 342 CERAMIC CAPACITOR	CCCSL271K500
		C344 ELECTR. CAPACITOR	CEAS101M16
		C345 MYLOR FILM CAPACITOR	CQMA473J50
		C346 CERAMIC CAPACITOR	CKDYB682K500
		C347 MYLOR FILM CAPACITOR	CQMA273J50
		C348 MYLOR FILM CAPACITOR	CQMA223J50
		C349 ELECTR. CAPACITOR	CEAS101M16
		C352 ELECTR. CAPACITOR	CEAS470M16
		C361, 362 ELECTR. CAPACITOR	CEAS010M50
		C363 ELECTR. CAPACITOR	CEAS470M16
		C364 CERAMIC CAPACITOR	CKSQYB473K50
		C365 ELECTR. CAPACITOR	CEAS101M10
		C367, 368 ELECTR. CAPACITOR	CEASR68M50
		C369, 370 ELECTR. CAPACITOR	CEAS4R7M50
		C371 ELECTR. CAPACITOR	CEAS220M16
		C372 ELECTR. CAPACITOR	CEAS010M50
		C380 CERAMIC CAPACITOR	CKDYX473MZ5
		C385, 386	CCSQCH101J50
		C387, 388 CERAMIC CAPACITOR	CKCYX333MZ5
		C389, 390 CERAMIC CAPACITOR	CKCYX393MZ5
		C391 CERAMIC CAPACITOR	CCSQCH221J50

www.manualscenter.com

Mark	No.	Symbol & Description	Part No.
	C393	CERAMIC CAPACITOR	CKSQYB471K50
	C394	CERAMIC CAPACITOR	CKCYB471K50
	C395, 396	ELECTR. CAPACITOR	CEAS470M16
	C397, 398	ELECTR. CAPACITOR	CEAS010M50
	C399	ELECTR. CAPACITOR	CEAS100M25
	C400		CKSQYB102K50
	C401, 402	ELECTR. CAPACITOR	CEAS010M50
	C403, 404		CCSQCH391J50
	C405, 406	ELECTR. CAPACITOR	CEAS330M16
	C407, 408	ELECTR. CAPACITOR	CEAS470M16
	C409, 410	CERAMIC CAPACITOR	CKSQYB473K50
	C411	ELECTR. CAPACITOR	CEAS101M10
	C412, 413	CERAMIC CAPACITOR	CCSQCH151J50
	C414	ELECTR. CAPACITOR	CEAS3R3M50
	C416	ELECTR. CAPACITOR	CEAS100M25
	C417	CERAMIC CAPACITOR	CKSQYB473K50

RESISTORS

	R301-320		RS1/10S□□□J
	R323, 324		RS1/10S□□□J
	R325, 326	CARBONFILM RESISTOR	RD1/4PM□□□J
	R327, 328		RS1/10S□□□J
	R330, 331		RS1/10S□□□J
	R332, 333	CARBONFILM RESISTOR	RD1/8PM□□□J
	R334, 335		RS1/10S□□□J
	R336-339	CARBONFILM RESISTOR	RD1/8PM□□□J
	R340-351		RS1/10S□□□J
	R361-382		RS1/10S□□□J
	R383, 384	CARBONFILM RESISTOR	RD1/4PM□□□J
	R385, 386		RS1/10S□□□J
	R388		RS1/10S□□□J
	R392	CARBONFILM RESISTOR	RD1/8PM□□□J
	R393		RS1/10S□□□J
	R394, 395	CARBONFILM RESISTOR	RD1/4PM□□□J
	R396		RS1/10S□□□J
	R397	CARBONFILM RESISTOR	RD1/8PM□□□J
	R401		RS1/10S□□□J
	R402, 403	CARBONFILM RESISTOR	RD1/2PMF□□□J
	R404-415		RS1/10S□□□J
	R421-439		RS1/10S□□□J
	R441-443		RS1/10S□□□J
	R449		RS1/10S□□□J
	R450	CARBONFILM RESISTOR	RD1/8PM□□□J
	R451		RS1/10S□□□J
	R452, 453	CARBONFILM RESISTOR	RD1/4PM□□□J
	R455-459		RS1/10S□□□J
	R460	CARBONFILM RESISTOR	RD1/8PM□□□J
	R461, 462		RS1/10S□□□J
	R463	CARBONFILM RESISTOR	RD1/8PM□□□J
	R464-470		RS1/10S□□□J
	R471, 472	METAL OXIDE RESISTOR	RS1LMF□□□J
	R473, 474	CARBONFILM RESISTOR	RD1/4PM□□□J
	R475, 476		RS1/10S□□□J
	R477	CARBONFILM RESISTOR	RD1/8PM□□□J
	R478, 479		RS1/10S□□□J
	R480	CARBONFILM RESISTOR	RD1/8PM□□□J
	R481, 482		RS1/10S□□□J
	R483, 484	CARBONFILM RESISTOR	RD1/8PM□□□J
	R485-497		RS1/10S□□□J
	R498	CARBONFILM RESISTOR	RD1/8PM□□□J
	R499		RS1/10S□□□J
	R501		RS1/10S□□□J
	R502, 503	CARBONFILM RESISTOR	RD1/8PM□□□J
	R504		RS1/10S□□□J
	R505	CARBONFILM RESISTOR	RD1/8PM□□□J
	R506		RS1/10S□□□J
	R507	CARBONFILM RESISTOR	RD1/8PM□□□J
	R508		RS1/10S□□□J
	R509	CARBONFILM RESISTOR	RD1/8PM□□□J
	R510		RS1/10S□□□J
	R511	CARBONFILM RESISTOR	RD1/8PM□□□J
	R512, 513		RS1/10S□□□J
	R514	CARBONFILM RESISTOR	RD1/8PM□□□J
	R515-528		RS1/10S□□□J
	R531, 532	CARBONFILM RESISTOR	RD1/8PM□□□J
	R533-538		RS1/10S□□□J
	VR301, 302	VR	VRTM6V104
	VR303-306	VR	VRTM6V203
	VR307, 308	VR	VRTM6V204
	VR309, 310	VR	VRTM6V203

OTHERS

	PHONO JACK 2-P	AKB1059
	SOCKET 15-P	AKP-048
	SOCKET 14-P	AKP1056
	CN16	KPE12
	CN17	KPE11
	CN18	KPE14
	CN21	KPE8
	X301	ASS1018

TRANS ASSEMBLY

There is no supply part in this assembly.

MAIN BOARD ASSEMBLY

SEMICONDUCTORS

		IC1 PRE AMP IC	CXA1081S
⚠		IC17 OP AMP	TA8410AK
		IC18 D/A CONVERTER	LC7881-C
		IC2 SERVO CONTROLL IC	CXA1082BS
		IC24, 25 OP-AMP IC	RC4558DD
		IC3 EFM DEMODULATION IC	CXD1130QZ
		IC4 MEMORY IC	HM6116-90
		IC6 MICROCOMPUTER	PD4257
		Q1 TRANSISTOR	2SA1399
		Q10, 11 TRANSISTOR	RN2206
		Q12 TRANSISTOR	2SB1296
		Q13 TRANSISTOR	2SD1936
		Q14 TRANSISTOR	DTC124ES
		Q16, 17 TRANSISTOR	2SC1740S

Mark	No.	Symbol & Description	Part No.
	Q2		2SD1762
	Q21	TRANSISTOR	2SA854S
	Q22	TRANSISTOR	2SC1741S
	Q3		2SB1185
	Q4	TRANSISTOR	2SC3581
	Q5	TRANSISTOR	2SA1399
	Q8, 9	TRANSISTOR	2SC1740S
	D1, 2		MTZ3.6A
COILS			
	L1, 2		LAU010K
CAPACITORS			
	C1	MYLOR FILM CAPACITOR	CQMA103K50
	C10	ELECTR. CAPACITOR	CEAS101M10
	C100-105	ELECTR. CAPACITOR	CEAS330M16
	C11	MYLOR FILM CAPACITOR	CQMA333K50
	C12	ELECTR. CAPACITOR	CEAS330M16
	C13	MYLOR FILM CAPACITOR	CQMA332J50
	C14	MYLOR FILM CAPACITOR	CQMA103K50
	C140	CERAMIC CAPACITOR	CGCYX104K25
	C141	CERAMIC CAPACITOR	CKCYF103Z50
	C143	CERAMIC CAPACITOR	CKCYF103Z50
	C146	CERAMIC CAPACITOR	CCCSL101J50
	C15	ELECTR. CAPACITOR	CEAS331M16
	C16	ELECTR. CAPACITOR	CEASR47M50
	C161	CERAMIC CAPACITOR	CCCSL221J50
	C17	MYLOR FILM CAPACITOR	CQMA103K50
	C18	ELECTR. CAPACITOR	CEAS330M16
	C19	ELECTR. CAPACITOR	CEAS471M6R3
	C20	ELECTR. CAPACITOR	CEAS330M16
	C21	MYLOR FILM CAPACITOR	CQMA333K50
	C22	ELECTR. CAPACITOR	CEASR47M50
	C23	ELECTR. CAPACITOR	CEAS330M16
	C24	CERAMIC CAPACITOR	CGCYX473K25
	C25, 26	ELECTR. CAPACITOR	CEAS330M16
	C27	MYLOR FILM CAPACITOR	CQMA472K50
	C28	ELECTR. CAPACITOR	CEAS330M16
	C29	MYLOR FILM CAPACITOR	CQMA222J50
	C3	CERAMIC CAPACITOR	CCCCH100D50
	C31, 32	MYLOR FILM CAPACITOR	CQMA104K50
	C34	ELECTR. CAPACITOR	CEAS4R7M50
	C35	MYLOR FILM CAPACITOR	CQMA104K50
	C36	ELECTR. CAPACITOR	CEAS330M16
	C38	ELECTR. CAPACITOR	CEAS330M16
	C39	MYLOR FILM CAPACITOR	CQMA104K50
	C40	ELECTR. CAPACITOR	CEAS010M50
	C41	ELECTR. CAPACITOR	CEAS330M16
	C43	ELECTR. CAPACITOR	CEAS101M10
	C46	MYLOR FILM CAPACITOR	CQMA103K50
	C47	ELECTR. CAPACITOR	CEAS330M16
	C48	ELECTR. CAPACITOR	CEAS3R3M50
	C49	MYLOR FILM CAPACITOR	CQMA472K50
	C5	ELECTR. CAPACITOR	CEAS101M35
	C50	ELECTR. CAPACITOR	CEAS330M16
	C51	MYLOR FILM CAPACITOR	CQMA102J50
	C60	ELECTR. CAPACITOR	CEAS101M10
	C62	ELECTR. CAPACITOR	CEAS101M10
	C63	CERAMIC CAPACITOR	CKCYF103Z50
	C67, 68	MYLOR FILM CAPACITOR	CQMA683J50
	C69, 70	ELECTR. CAPACITOR	CEAS330M16
	C71, 72	ELECTR. CAPACITOR	CEAS010M50
	C73, 74	MYLOR FILM CAPACITOR	CQMA562J50
	C75, 76	MYLOR FILM CAPACITOR	CQMA471J50
	C77, 78	MYLOR FILM CAPACITOR	CQMA561J50
	C79	MYLOR FILM CAPACITOR	CQMA103K50
	C8	CERAMIC CAPACITOR	CGCYX473K25
	C80	MYLOR FILM CAPACITOR	CQMA103K50
	C81, 82	CERAMIC CAPACITOR	CCCCH300J50
	C86	CERAMIC CAPACITOR	CKCYF103Z50
	C9	MYLOR FILM CAPACITOR	CQMA333K50
	C93, 94	ELECTR. CAPACITOR	CEAS100M16
	C97	ELECTR. CAPACITOR	CEAS330M16
RESISTORS			
	R10	CARBONFILM RESISTOR	RD1/6PM□□□J
	R100-104	CARBONFILM RESISTOR	RD1/6PM□□□J
	R107-109	CARBONFILM RESISTOR	RD1/6PM□□□J
	R11	CARBONFILM RESISTOR	RD1/6PM□□□J
	R110	CARBONFILM RESISTOR	RD1/6PM□□□J
	R12	CARBONFILM RESISTOR	RD1/6PM□□□J
	R120	CARBONFILM RESISTOR	RD1/6PM□□□J
	R122-127	CARBONFILM RESISTOR	RD1/6PM□□□J
	R129	CARBONFILM RESISTOR	RD1/6PM□□□J
	R13	CARBONFILM RESISTOR	RD1/6PM□□□J
	R139	CARBONFILM RESISTOR	RD1/6PM□□□J
	R14	CARBONFILM RESISTOR	RD1/6PM□□□J
	R140-142	CARBONFILM RESISTOR	RD1/6PM□□□J
	R146-148	CARBONFILM RESISTOR	RD1/6PM□□□J
	R15	CARBONFILM RESISTOR	RD1/6PM□□□J
	R151	CARBONFILM RESISTOR	RD1/6PM□□□J
	R16	CARBONFILM RESISTOR	RD1/6PM□□□J
	R160	CARBONFILM RESISTOR	RD1/6PM□□□J
	R17-27	CARBONFILM RESISTOR	RD1/6PM□□□J
	R29	CARBONFILM RESISTOR	RD1/6PM□□□J
	R30	METAL FILM RESISTOR	RN1/6PQ□□□□F
	R31-36	CARBONFILM RESISTOR	RD1/6PM□□□J
	R38-40	CARBONFILM RESISTOR	RD1/6PM□□□J
	R42, 43	CARBONFILM RESISTOR	RD1/6PM□□□J
	R45, 46	CARBONFILM RESISTOR	RD1/6PM□□□J
	R48-52	CARBONFILM RESISTOR	RD1/6PM□□□J
	R54-63	CARBONFILM RESISTOR	RD1/6PM□□□J
	R76	CARBONFILM RESISTOR	RD1/6PM□□□J
	R79-89	CARBONFILM RESISTOR	RD1/6PM□□□J
	R97-99	CARBONFILM RESISTOR	RD1/6PM□□□J
	VR3-5	VR	RCP1035
	VR6	VR	RCP1037
	VR8	VR	RCP1063
OTHERS			
	CN1	CONNECTOR	52045-1610

www.manualscenter.com

Mark	No.	Symbol & Description	Part No.
	CN4		KPE4
	CN5		KPE13
	X1	CERAMIC RESONATOR	VSS1014
	X2	CRYSTAL RESONATOR	PSS-012

8. ADJUSTMENTS

8.1 TUNER SECTION

Preparations

- Set the VOLUME control to minimum.
- Set to TUNER function.
- Refer to Fig. 8–3. for adjustment test points and controls.

FM tuner section adjustment

- Select the FM mode with the BAND selector switch.
- Connect as shown in Fig. 8–1.

Step	Adjustment name	FM SG (1 kHz ± 75 kHz dev.)		XR–P500 Reception frequency indication	Adjustment	
		Frequency (MHz)	Level (dB μ)		Adjusting point	Specification
1	T meter center adjustment	98	60	98 MHz	L801	Adjust so that the voltage between TP802 and TP803 becomes 0V ± 50 mV.
2	FM VCO free–run frequency adjustment	98	60 (No modulation)	98 MHz	VR851	Adjust so that the frequency between TP804 and GND becomes 76 ±0.5 kHz.
3	Tuning indicator level adjustment	98	20	98 MHz	VR801	Adjust to the point where the tuning indicator just lights up.

AM tuner section adjustment

- AM SG level (dB μ/m) indicates the electric field strength of the loop antenna.
- Select the AM mode with the BAND selector switch.
- Connect as shown in Fig. 8–2.
- For the SD type only, set the CHANNEL STEP switch (S801) on the rear panel side to 9 kHz/50 kHz.

* Perform steps 1 to 3 only for the HEWZI type.

Step	Adjustment name	AM SG (400 Hz, 30% modulation)		XR–P500 Reception frequency indication	Adjustment	
		Frequency (kHz)	Level (dB μ /m)		Adjusting point	Specification
1	Tracking adjustment	603	55	603 MHz	L821	Adjust so that the DC voltage between TP806 and GND becomes maximum.
2		1395	55	1395 MHz	TC801	Adjust so that the DC voltage between TP806 and GND becomes maximum.
3	Repeat steps 1 and 2 so that both steps are satisfied.					
4	IFT adjustment	603	55	603 MHz	F803	Adjust so that the DC voltage between TP806 and GND becomes maximum.
5	Tuning indicator level adjustment	999	55	999 MHz	VR802	Adjust to the point where the tuning indicator just lights up.

www.manualscenter.com

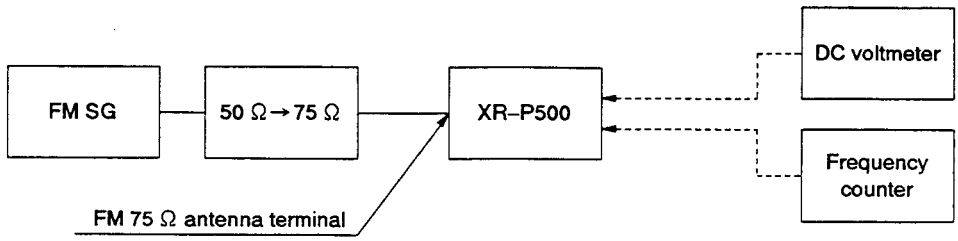

Fig. 8–1. FM Adjustment Connection Diagram

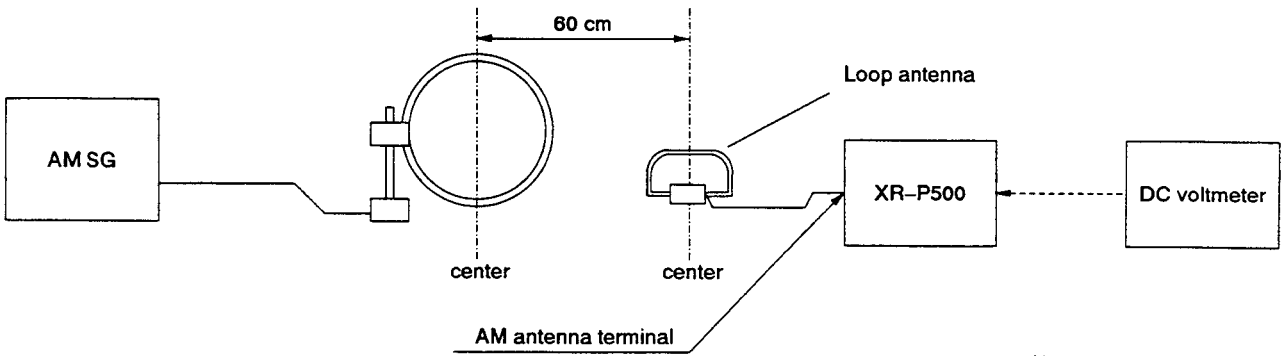

Fig. 8–2. AM Adjustment Connection Diagram

www.manualscenter.com

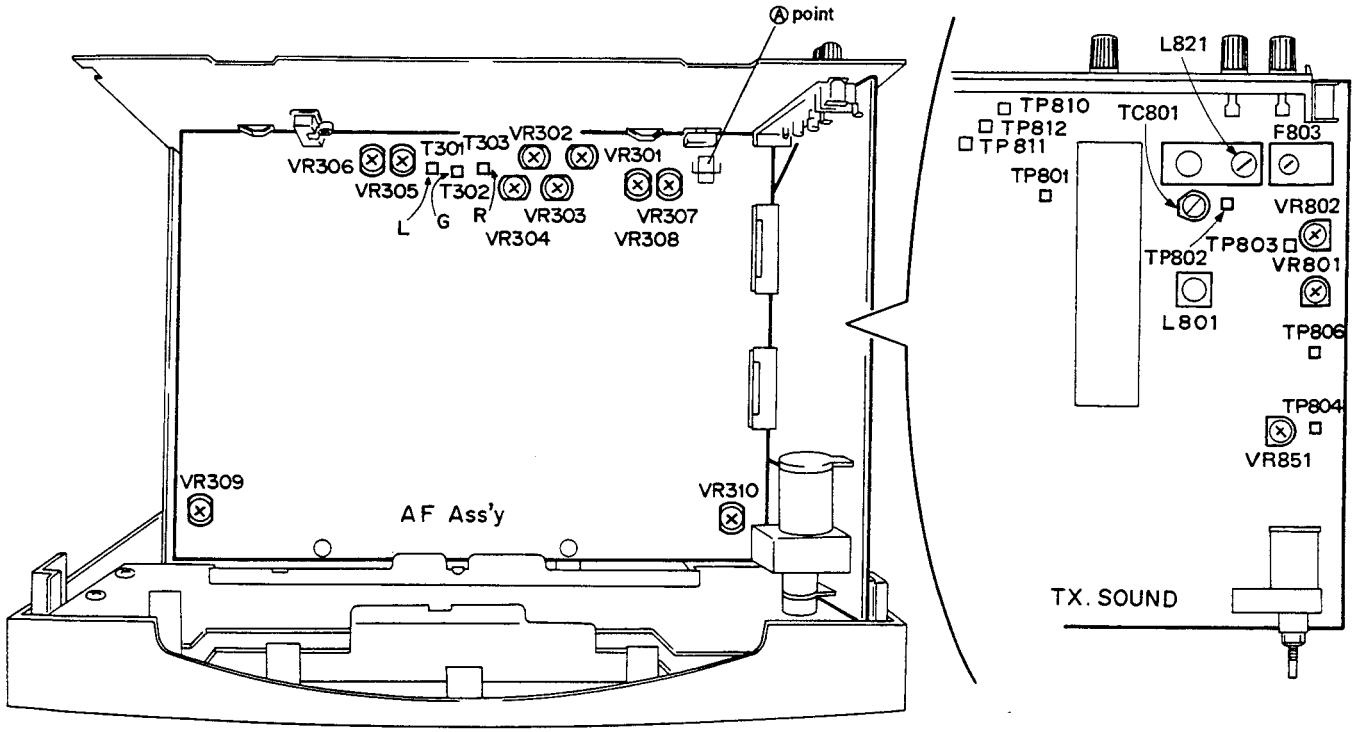

Fig. 8–3. Adjustment Points and Test Points

www.manualscenter.com

8.2 TAPE DECK

• Adjustment points and test points are shown in Fig. 8–2.

● Mechanical Adjustment

• Set the TAPE function.
• Test tape: STD–301 (3 kHz, 30 min.)

1. Tape Speed Adjustment

No.	Mode	Test tape	Adjusting points		Measurement points	Adjustment procedure	Remarks
1	PLAY	STD–301 (playback 3 kHz)	Deck I	DECK CTRL Ass'y VR309	TP–R (Rch)	Press the PLAY SW and adjust so that the reading becomes 3010 ± 10 Hz. Confirm that wow & flutter level is below 0.2% (in the reverse direction, confirm that the reading is within 3010 ± 55 Hz).	
2	PLAY		Deck II	DECK CTRL Ass'y VR802	TP–R (Rch)	Press the PLAY SW and adjust so that the reading becomes 3010 ± 10 Hz. Confirm that wow & flutter level is below 0.2% (in the reverse direction, confirm that the reading is within 3010 ± 55 Hz).	

● Electrical Adjustment

Check the following before starting.

1. Confirm that tape speed adjustment has been completed.
2. Clean the heads and demagnetize them using a head eraser.
3. Set the measurement level to 0 dBV=1 Vrms.
4. Use the specified tape for adjustment. Use the labeled (A) side of the test tape.
   STD–331B: for playback adjustment
   STD–630: normal blank tape
5. Provide yourself with the following measuring devices:
   AC millivoltmeter, low–frequency oscillator, attenuator, oscilloscope
6. Adjust both right and left channels unless otherwise specified.
7. Turn the DOLBY NR switch off unless otherwise specified.
8. Warm up the unit for several minutes before adjustment. In particular, be sure to warm up the unit in the REC/PLAY mode for 3 to 5 minutes before starting recording/playback frequency characteristics adjustment.
9. Always follow the indicated adjustment order. Otherwise, a complete adjustment may not be achieved.

Playback Adjustment (decks I, II)

1. Head angle adjustment
2. Playback level adjustment

Recording Adjustment (decks I, II)

1. Bias oscillation frequency check
2. Recording/playback frequency characteristics adjustment
3. Recording level adjustment
4. ALC operation check

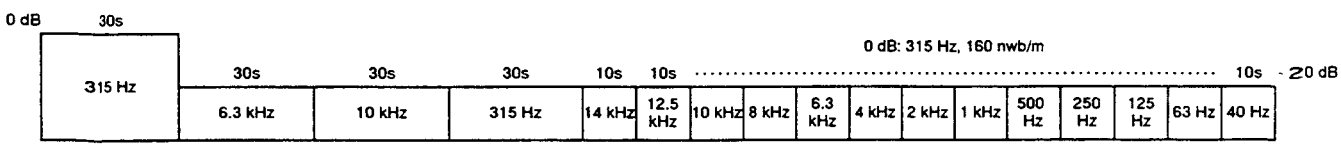

Fig. 8–3. STD–331B Test Tape

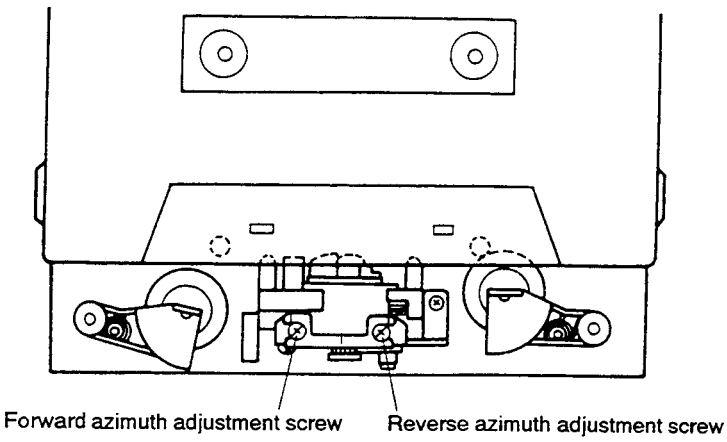

Fig. 8–4. Head Angle Adjustment

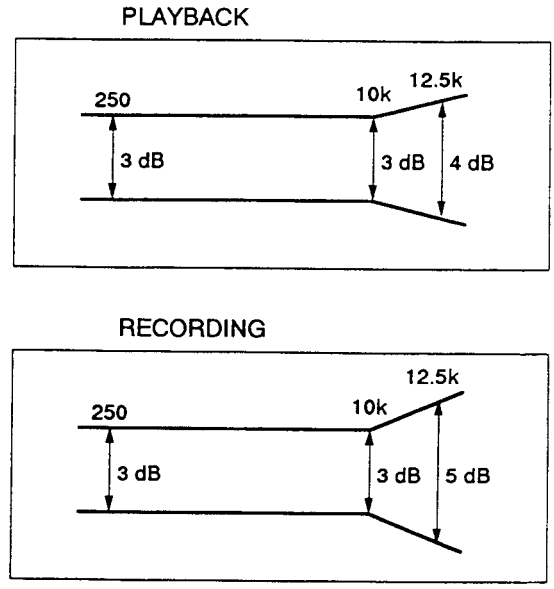

Fig. 8–5. Frequency Characteristics

● Playback Adjustment

1. Head Angle Adjustment

- This unit is equipped with auto tape selector.
- Do not switch between forward and reverse operation with the screwdriver inserted.

Step	Tape selector (AUTO)	Mode	Input signal/ test tape	Adjusting points		Measurement points	Adjustment value	Remarks
1	NORMAL	PLAY	STD–331B test tape (playback 10 kHz, –20 dB)	Deck I	Head angle adjustment screw (Fig. 8–4)	TP–L (Lch) TP–R (Rch) (DOLBY TP)	Max. playback signal level	After adjustment, apply lock paint to the head angle adjustment screw.
				Deck II				

2. Playback Level Adjustment

- Since this adjustment determines playback Dolby NR level, perform it carefully.

Step	Tape selector (AUTO)	Mode	Input signal/ test tape	Adjusting points		Measurement points	Adjustment value	Remarks
1	NORMAL	PLAY	STD–331B test tape (playback 315 kHz, 0 dB)	Deck I	VR303 (Lch) VR304 (Rch)	TP–L (Lch) TP–R (Rch) (DOLBY TP)	–6.2 dBV	
				Deck II	VR301 (Lch) VR302 (Rch)			

Note: Deck II level also changes when deck I level is adjusted. Therefore, adjust deck I level first.

www.manualscenter.com

● Recording Adjustment

1. Bias Oscillation Frequency Check

Step	Tape selector (AUTO)	Mode	Input signal/ test tape	Adjusting points		Measurement points	Adjustment value	Remarks
1	NORMAL	REC	Load the STD-630 test tape and set the recording mode.	Deck I			Oscillation frequency to be 106.5 ± 2 kHz with the rear panel beat-cut switch in the "1" position.	Frequency is 2 to 3 kHz lower with the rear panel beat-cut switch in the "2" position.
				Deck II	——	Between the Ⓐ point in Fig. 8-2 and GND		

2. Recording/Playback Frequency Characteristics Adjustment

• Since this adjustment affects recording bias, prevent distortion from increasing due to underbias.

Step	Tape selector (AUTO)	Mode	Input signal/ test tape	Adjusting points		Measurement points	Adjustment value	Remarks
1	NORMAL	REC	Apply 315 Hz to the audio input and set the VIDEO function.	Deck I		TP-L (Lch) TP-R (Rch) (DOLBY TP)	-26.2 dBV	
				Deck II	Input signal level			
2	NORMAL	REC/ PLAY	Load the STD-630 test tape and record/ playback the 315 Hz and 10 kHz signals (see the Note below).	Deck I		TP-L (Lch) TP-R (Rch) (DOLBY TP)	Repeat adjustment until playback level of the 10 kHz signal is within 0 ± 0.5 dB from that of the 315 Hz signal.	
				Deck II	VR307 (Lch) VR308 (Rch)			

Note: Set to the same level used for the 315 Hz input signal at step 1.

3. Recording Level Adjustment

Step	Tape selector (AUTO)	Mode	Input signal/ test tape	Adjusting points		Measurement points	Adjustment value	Remarks
1	NORMAL	REC	Input a 315 Hz signal to the DAT/VIDEO playback terminal and set the DAT/VIDEO function.	Deck I	Input signal level	TP-L (Lch) TP-R (Rch) (DOLBY TP)	-6.2 dBV	
				Deck II				
2	NORMAL	REC/ PLAY	STD-630 test tape and record/playback the 315 Hz signal.	Deck I		TP-L (Lch) TP-R (Rch) (DOLBY TP)	Repeat recording, playback and adjustment until playback level of the 315 kHz signal becomes -6.2 dBV.	
				Deck II	VR305 (Lch) VR306 (Rch) (REC Ass'y)			

4. ALC Operation Check

Step	Tape selector (AUTO)	Mode	Input signal/ test tape	Adjusting points	Measurement points	Adjustment value	Remarks
1	NORMAL	REC• PAUSE	Input a 315 Hz signal to the DAT/VIDEO playback terminal and set the DAT/VIDEO function.	Input signal level	TP-L (Lch) TP-R (Rch) (DOLBY TP)	-6.2 dBV	
2				Set to a level +10 dB above the input level at step 1.		-1.2 ± 2.5 dBV	

8.3 CD SECTION

Perform the following adjustments in the indicated order.

● Adjustments

1. Focus offset adjustment
2. Focus lock and spindle lock check
3. Grating adjustment
4. Tracking adjustment
5. Tangential/radial adjustment
6. RF level adjustment
7. Laser diode power check
8. Focus gain adjustment
9. Tracking gain adjustment
10. VCO free-running frequency adjustment

● Measuring Devices

1. Dual-trace oscilloscope
2. Light power meter
3. YEDS-7 test disc, 8 cm disc
4. Loop gain adjustment filter
5. Signal generator
6. Frequency counter
7. General-use tools

● The Test Mode

This unit is adjusted in the test mode.

Setting and Canceling the Test Mode

① To set the test mode, plug the power cord with the J1 and J2 jumpers connected to each other, then turn the POWER switch ON.

② To cancel the test mode, turn the POWER switch OFF, then unplug the power cord.

In the test mode, unit controls work as shown in Table 1.

● Description of Variable Resistors used for Adjustment

VR1: Laser power
VR3: Focus gain (FCS. GAN)
VR4: Tracking gain (TRK. GAN)
VR5: Tracking balance (TRK. BAL)
VR6: Focus offset (FCS. OFS)
VR8: VCO free-running adjustment (VCO. ADJ)

Adjustment Points

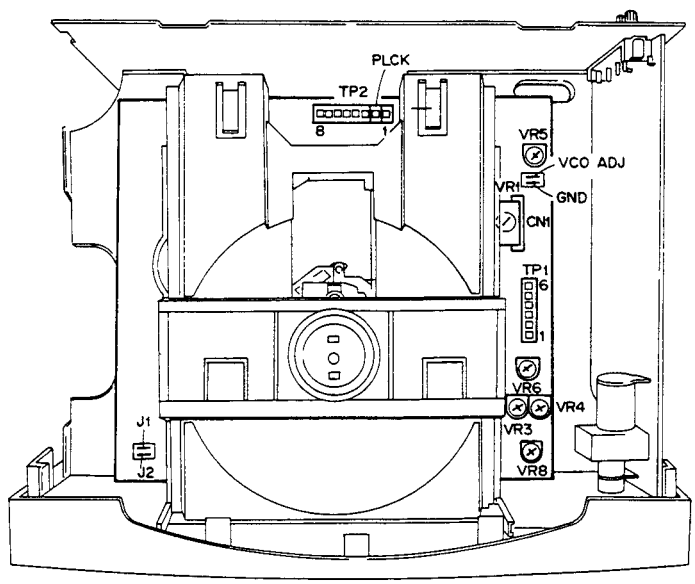

Fig. 1. Adjustment Points

www.manualscenter.com

In the test mode, opening and closing of servos is performed independently. Therefore, to set the play mode the servos have to be closed in (serial) sequence. Remember that the play mode cannot be set simply by pressing the PAUSE (▮▮) key. To set the play mode from the stop mode, for example, press the following keys in the indicated order:

* In the test mode, servos keep a serial sequence.

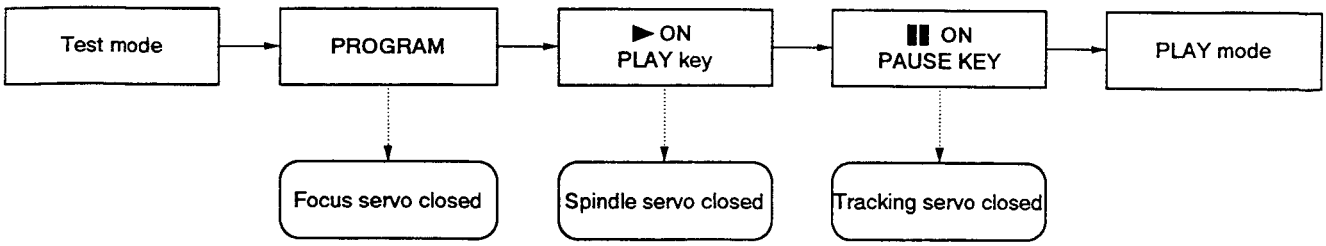

● Function of Each Key In the Test Mode

Symbol	Key name	Function during test mode	Description
	PROGRAM	Focus servo close	Lights the laser diode and moves the focus actuator in the vertical direction to close the focus servo.
▶	CD PLAY	Spindle servo close	After kicking the spindle motor, it closes the servo in the CLV–A mode.
▮▮	PAUSE	Tracking servo close/open	Performs a toggle operation. When pressed, the tracking servo is closed and the unit enters the play mode (the focus and spindle servos should be already closed). At this time the PAUSE indicator lights. If pressed again, the tracking servo opens.
⏮ ◀◀	TRACK/ MANUAL SEARCH REV	Carriage reverse (inward)	Moves the carriage inwards at high (approx. 2 cm/s) speed. Since there is no safety device to stop the carriage, be sure to stop it manually in time (this operation starts approx. 0.5 second after the key is pressed).
⏭ ▶▶	TRACK/ MANUAL SEARCH FWD	Carriage forward (outward)	Moves the carriage outwards at high (approx. 2 cm/s) speed. Since there is no safety device to stop the carriage, be sure to stop it manually in time (this operation starts approx. 0.5 second after the key is pressed).
■	STOP	Stop	Stops all servos and returns the unit to the initial condition.
⏏	OPEN/CLOSE	(Disc tray) open/close	Opens and closes the disc tray. The pickup does not return, however, to the rest (inner) position when the tray is opened. It does not move either when the tray is closed.

Table 1. Test Mode Functions

Step	Oscilloscope setting		Test points	Adjusting points	Check Items/ adjustment specifications	Adjustment procedure
	V	H				
1	**Focus offset adjustment**					
			Pin 6 of TP1 (FCS. ERR)	VR6 (FCS. OFS)	Focus offset 0V ± 50 mV	● Set the test mode. (*) ● Adjust VR6 (FCS. OFS) so that FCS ERR (focus error) voltage at Pin 6 of TP1 becomes 0V ± 50 mV.
2	**Focus lock and spindle lock check**					
	V 0.5V/div	H 100 msec /div	Pin 1 of TP1 (RF output)		RF output Clockwise rotation	● Load the test disc. ● Set the test mode. (*) ● Move the pickup close to the center of the disc using the TRACK/MANUAL SEARCH FWD (►►) key. ● Observe the output from Pin 1 of TP1 with an oscilloscope and confirm that the RF signal is output when pressing the PROGRAM key. ● Press the PLAY key and confirm that the disc rotates clockwise at approx. normal speed (about 300 rpm around the center of the disc), without running wildly or in reverse direction.

* See page 91.

Step	Oscilloscope setting V	Oscilloscope setting H	Test points	Adjusting points	Check items/ adjustment specifications	Adjustment procedure
3	**Grating adjustment**					
	V: 0.5V/div H: 5 msec/div		Pin 2 of TP1	Grating adjustment plate	Tracking error waveform null point Maximum amplitude	**Note:** This adjustment can be performed with an 8 cm disc having pits over a 35 mm radius, or a 12 cm disc having pits over a 57 mm radius. ● Set the test mode. (*) ● Connect Pin 2 of TP1 with an oscilloscope via a 4 kHz low-pass filter. ● Load the disc. ● Move the pickup to the outer track of the disc (stop it on the disc pit area at such a location that the grating adjustment point can be seen from above the servo mechanism). ● Press the PROGRAM and PLAY keys in that order to close the focus and spindle servos (the tracking servo will not close). ● Insert a screwdriver in the grating adjustment plate slot. ● Observe the tracking error waveform and move the grating adjustment plate to the point where waveform amplitude is minimum and the envelope is smooth (null point). ● Turn the screwdriver slowly counter-clockwise from the null point and stop at the first point where waveform amplitude is maximum. **Note:** In case there is a difference of more than 10% between tracking error waveform levels at the inner and outer tracks of the disc, repeat the adjustment without inserting the low-pass filter.

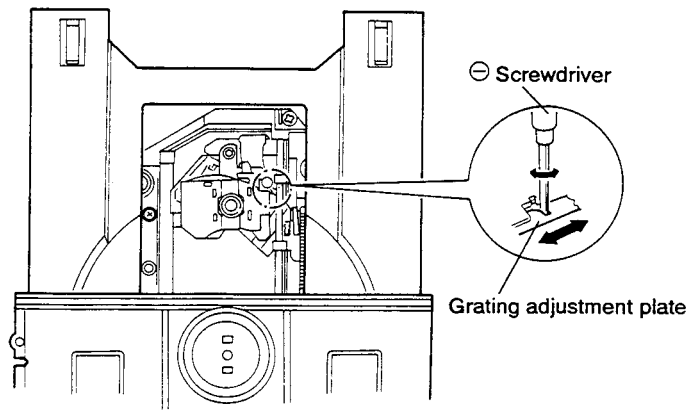

Fig. 2.

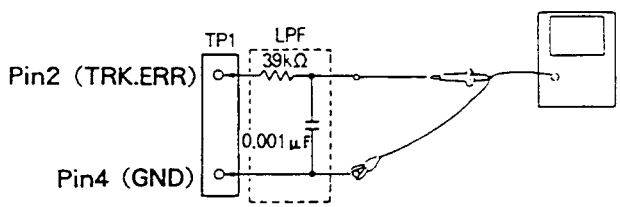

Fig. 3.

* See page 91.

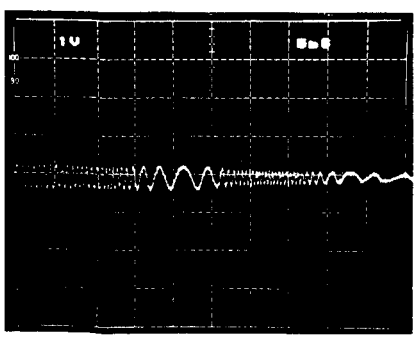

Photo-1 Null point

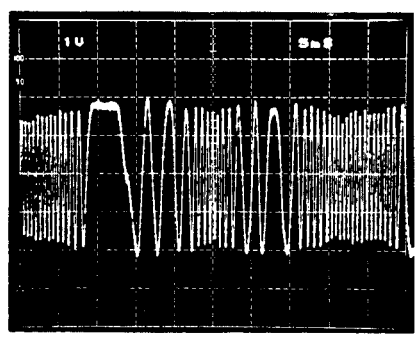

Photo-2 Maximum amplitude

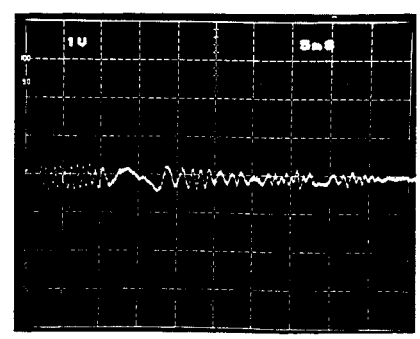

Photo-3
This is not the null-point waveform

www.manualscenter.com

Step	Oscilloscope setting		Test points	Adjusting points	Check Items/ adjustment specifications	Adjustment procedure
	V	H				
4	**Tracking balance adjustment**					
	V: 0.5V/div H: 5 msec/div		Pin 2 of TP1 (TRK. ERR)	VR5 (TR. BAL)		● Set oscilloscope ground to the center. ● Load the test disc. ● Set the test mode. (*) ● Press the TRACK/MANUAL SEARCH FWD key and move the pickup close to the middle track. ● Press the PROGRAM and PLAY keys in that order to turn the disc. ● Observe the tracking error waveform from Pin 2 of TP1 with the oscilloscope. ● Adjust VR5 (TR. BAL) so as to remove DC elements from the tracking error waveform (A=B).

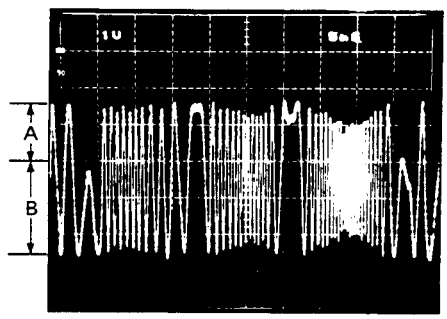

A≠B

Photo-4 DC elements mixed in signal

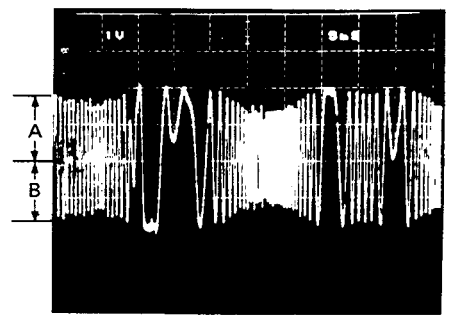

A=B

Photo-5 DC elements eliminated

* See page 91.

Step	Oscilloscope setting V	Oscilloscope setting H	Test points	Adjusting points	Check Items/ adjustment specifications	Adjustment procedure
5	**Tangential/radial adjustment (pickup inclination adjustment)**					

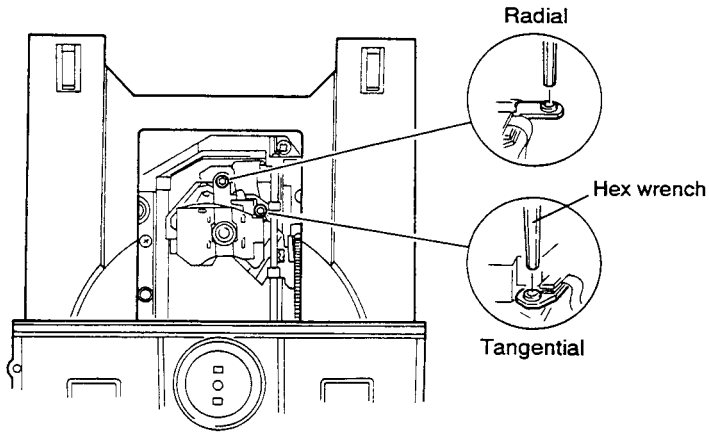

Fig. 4.

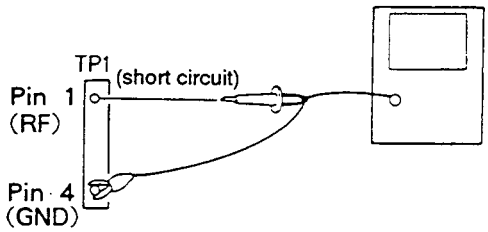

Fig. 5.

Note: This adjustment can be performed with an 8 cm disc having pits over a 35 mm radius, or a 12 cm disc having pits over a 57 mm radius. The YEDS-7 test disc cannot be used.

- Set the test mode. (*)
- Load the disc.
- Press the TRACK/MANUAL SEARCH FWD key and move the pickup to the outer track of the disc (stop it on the disc pit area at such a location that the tangential and radial adjustment screws can be seen from above the servo mechanism).
- Press the PROGRAM, PLAY and PAUSE keys in that order to close all servos.
- Connect Pin 1 of TP1 to an oscilloscope and observe the eye pattern.
- If the eye pattern is not clear, adjust first the radial adjustment screw, then the tangential adjustment screw with a hex wrench. Repeat alternately two or more times.

Note: The adjustment point is located around the middle location between the point where the eye pattern becomes blurred when turning the adjustment screw clockwise and the point where the eye pattern becomes blurred when turning the adjustment screw counterclockwise. Observe the overall clearness of the waveform and one of the diamond shapes in the eye pattern. Optimum adjustment is attained at the point where diamond shape lines are relatively thin (Photo 7). After tangential/radial adjustment, lock the screw with adhesive, etc.

* See page 91.

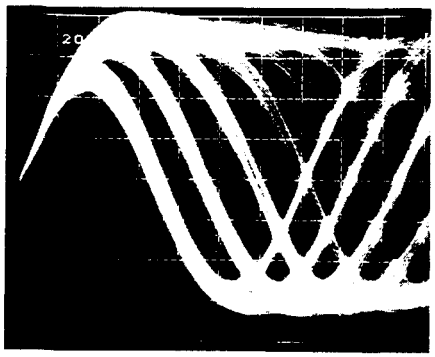

Photo-6

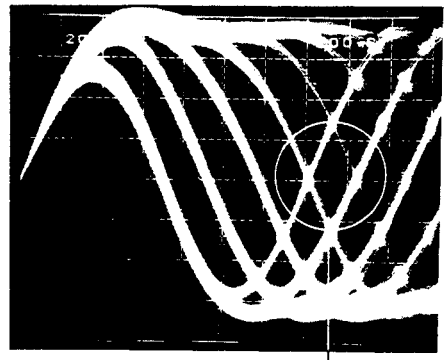

Photo-7

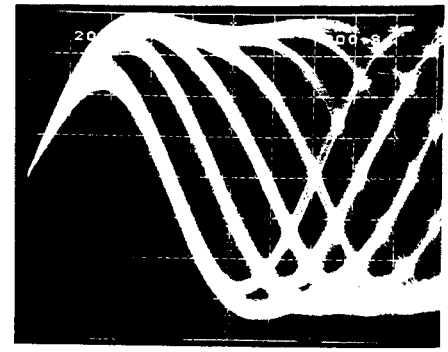

Photo-8

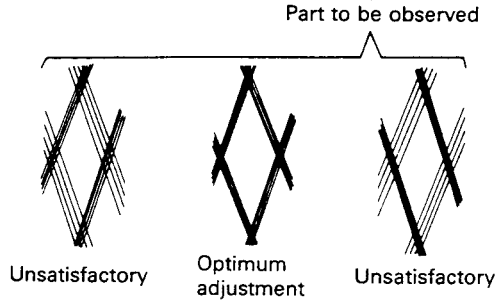

Eye Pattern

Step	Oscilloscope setting		Test points	Adjusting points	Check items/ adjustment specifications	Adjustment procedure
	V	H				
6	**RF level adjustment**					
			Pin 1 of TP1 (RF output)	VR1 (laser power)	1.2 ± 0.2V	● Set the test mode. (*) ● Connect the oscilloscope to Pin 1 (RF output) of TP1, play back the test disc and measure the RF waveform p–p voltage. ● Adjust to 1.2 ± 0.2 V.
7	**LD (laser diode) power check**					
					0.41 mW or less	● Set the test mode. (*) ● Press the PROGRAM key and turn the LD (laser diode) on. ● Place the sensor of the light power meter directly above the objective lens and confirm that LD power is 0.31 mW or less.

* See page 91.

www.manualscenter.com

Step	Oscilloscope setting V	Oscilloscope setting H	Test points	Adjusting points	Check Items/ adjustment specifications	Adjustment procedure
8	**Focus gain adjustment**					
	CH1 (X), CH2 (Y) 20 mV/div, 5 mV/div (probe 10:1)		X axis: Pin 5 of TP1 (FCS. IN) Y axis: Pin 6 of TP1 (FCS. ERR)	VR3 (FCS. GAIN)	Phase difference: 90 °	● With the power off, connect the oscilloscope and the oscillator as shown in Fig. 6. ● Set the normal playback mode. ● Turn oscillator power on and set it to output a 1.2 kHz, 1 Vp–p signal. **Note:** Some oscillators output DC when turned on. In that case, connect the oscillator after turning it on. ● Adjust VR3 (FCS GAN) so that the resurge waveform on the oscilloscope becomes an upright circle (phase difference 90 °).

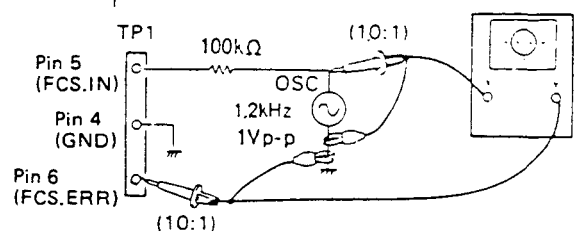

Fig. 6.

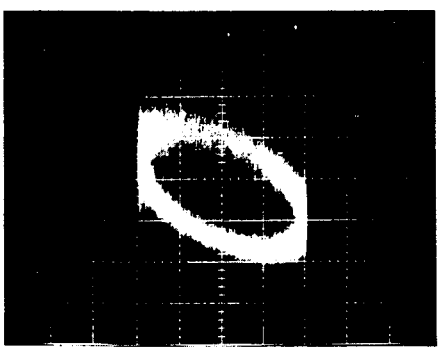

Gain overcompensated
Photo-9

Gain optimum
Photo-10

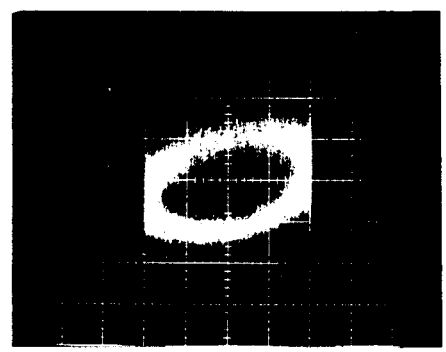

Gain undercompensated
Photo-11

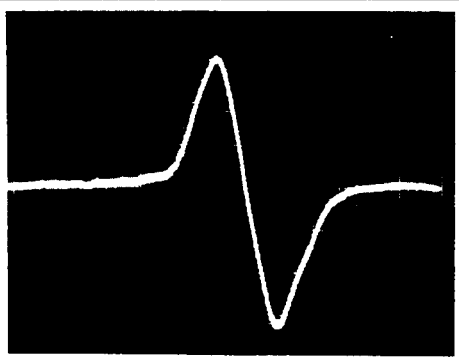

Focus error

Note: Focus error (S–shaped) signal check

● Set the test mode. (*)
● Ground Pin 5 of TP1.
● Connect the oscilloscope to Pin 6 of TP1.
● Press the PROGRAM key twice in a row and observe the generated waveform.

* See page 91

Step	Oscilloscope setting V	Oscilloscope setting H	Test points	Adjusting points	Check Items/ adjustment specifications	Adjustment procedure
9	**Tracking gain adjustment**					
	CH1 (X), CH2 (Y) 50 mV/div, 5 mV/div (probe 10:1)		X axis: Pin 3 of TP1 (TRK. IN) Y axis: Pin 2 of TP1 (TRK. ERR)	VR4 (TRK. GAIN)	Phase difference: 90 °	● With the power off, connect the oscilloscope and the oscillator as shown in Fig. 7. ● Set the normal playback mode. ● Turn oscillator power on and set it to output a 1.2 kHz, 2 Vp–p signal. **Note:** Some oscillators output DC when turned on. In that case, connect the oscillator after turning it on. ● Adjust VR4 (TRK. GAN) so that the resurge waveform on the oscilloscope becomes an upright circle (phase difference 90 °).

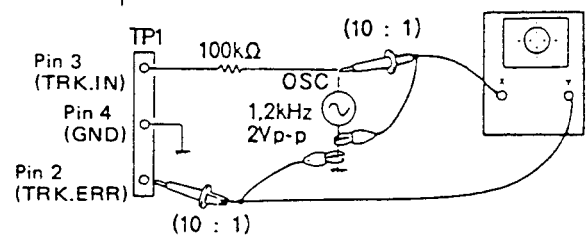

Fig. 7.

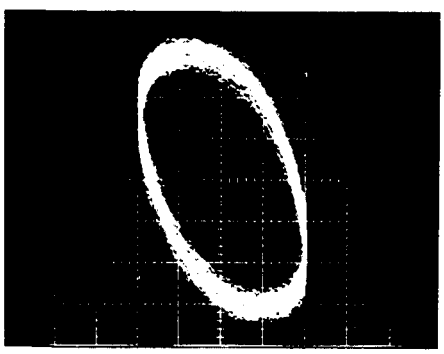

Gain overcompensated
Photo-12

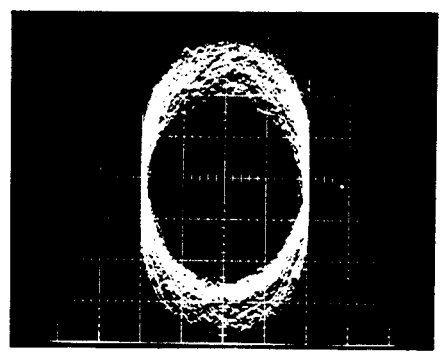

Gain optimum
Photo-13

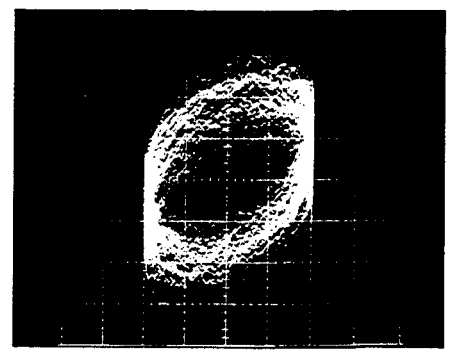

Gain undercompensated
Photo-14

10	**VCO free–running frequency adjustment**					
			Pin 2 of TP2 (PLCK)	VR8 (VCO. ADJ)	4.275 ± 0.025 MHz	● Set the stop mode. ● Connect the VCO. ADJ and GND jumpers with a screwdriver, etc. (Fig. 1). ● Connect the PLCK jumper to a frequency counter capable of measuring frequencies above 10 MHz. ● Adjust VR8 (VCO. ADJ) so that the frequency counter reads 4.275 ± 0.025 MHz.

* See page 91.

www.manualscenter.com

9. IC INFORMATION

● PD4240−A
(Tuner Display Microprocessor)

- Perform the key input process the all amplifier, tuner and CD (except ASES, COPY) to send always the serial data to each microprocessor.
- Receive each indicated data from the deck amplifier microprocessor (PDE034−A), CD microprocessor (PD4257) to indicate with FL.
- Perform the tuner and timer controls.

Pin No.	Name	I/O	Function		Active
1	S4/KO4	O	FL segment output or key scan output		H
2	S3/KO3				
3	S2/KO2				
4	S1/KO1				
5	AC IN	I	AC input (inputs 50/60 Hz.)		−
6	SCLK	I	Serial clock input	Communication with deck amplifier microprocessor (PDE034−B)	L
7	SDATA 1	O	Serial data output		−
8	SDATA 2	I	Serial data input		−
9	SR IN	I	Remote control signal input		−
10	STEREO	I	Stereo signal output		L
11	———	I	Not used		−
12	9K/10K	I	CH step swtiching AM−9K, FM−50K (L) /AM−10K, FM−100K (H) overseas only		−
13	MUTE	O	Mute signal output⇨to deck amplifier microprocessor (PDE034−B)		L
14	PLL CLK	O	Serial clock output	To PLL IC (LC7218)	L
15	PLL DATA	O	Serial data output		−
16	PLL CE	O	Chip enable output		H
17	FM MONO	O	FM mode switching (AUTO (L) /MONO (H))		−
18	———	O	Not used		−
19	TUNE	I	Tuned signal input		L
20	J/EX	I	Version switching J (H) /Ex (L) ("L" when pulled down with R928.)		−
21	RESET	O	Reset signal output⇨to CD microprocessor (PD4257) and deck amplifier microprocessor (PDE034−B)		L
22	REQ	I	Request input	From CD microprocessor (PD4257)	L
23	CD CLK	I	Serial clock input		L
24	CD DATA	I	Serial data input		−
25	———	O	Not used		−
26	LED B.G.M.	O	(Open)		H
27	LED DIRECT	O	(Open)		H
28	LED EXCITE	O	(Open)		H
29	SR OUT	O	SR signal output⇨to CD microprocessor (PD4257)		−
30	X1	I	Connect the 4.19 MHz ceramic oscillator terminal		−
31	X2	O			
32	Vss	−	GND		−

Pin No.	Name	I/O	Function	Active
33	XT1	I	GND	–
34	NC	O	NC	–
35	KI 1	I	Key scan input	H
36	KI 2			
37	KI 3			
38	KI 4			
39	RES	I	Reset input	L
40	10G	O	FL grid output	H
41	9G			
42	8G			
43	7G			
44	6G			
45	5G			
46	4G			
47	3G			
48	2G			
49	1G			
50	S16	O	FL segment output or key scan output	H
51	S15			
52	S14			
53	S13			
54	S12			
55	S11/KO11			
56	V LOAD	–	Power supply for timing, segment pins pull-down	–
57	V PRE	–	FL controller, driver power supply pin	–
58	S10/KO10	O	FL segment output or key scan output	H
59	S9/KO9			
60	S8/KO8			
61	S7/KO7			
62	S6/KO6			
63	S5/KO5			
64	V_{DD}	–	+5V	–

www.manualscenter.com

● PD4257 (CD Microprocessor)

- Performs CD control.
- Operates on serial data (SR signal) in response to key-in from the Tuner Display microprocessor (PD4240).
- Creates CD status display data and sends serial data to the Tuner Display microprocessor when and as needed.

Pin No.	Name	I/O	Function	Active
1	NC	O	Not used	–
2				
3				
4				
5	$\overline{\text{TEST}}$	I	Test mode request input (L : TEST, H : NORM mode)	–
6	CLK	O*	Serial clock	H
7	DATA	O*	LSI control data serial output	H
8	SUBQ	I	Subcode Q data serial input	–
9	RMDT	I	Remote control data input	–
10	SCOR	I	Subcode sync S0+S1 input	–
11	GFS	I	Frame sync lock input (H : OK, L : NG)	–
12	SENS	I	LSI operation status MULTI mode input	–
13	NC	O	Not used	L
14				
15				
16				
17	$\overline{\text{LDON}}$	O*	Laser diode output (L : ON, H : OFF)	H
18	MUTE	O*	Muting output (H : mute, L : OFF)	H
19	$\overline{\text{XLT}}$	O*	LSI control data latch pulse	H
20	DIRC	O*	Direction reversing output for track jump	H
21	DCLK	O	Display data serial transfer clock	H
22	DDAT	O	Display data serial transfer data	H
23	$\overline{\text{DREQ}}$	O	Display data serial transfer request	H
24	SW5V	I	LSI circuit power detection input (H : Power ON, L : OFF)	–
25	$\overline{\text{OPEN}}$	I	Disc tray open end SW input (L : Open)	–
26	$\overline{\text{CLMP}}$	I	Disc clamp end SW input (L : Clamp)	–
27	$\overline{\text{INSD}}$	I	Slider inside SW input (L : Inside)	–
28	FOK	I	Focus OK input (H : OK, L : NG)	–
29	NC	O	Not used	L
30	X1		Main system clock oscillation (4.194304 MHz)	
31	X2			
32	Vss		GND	

Pin No.	Name	I/O	Function	Active
33	XT1		GND	
34	XT2		Not used	
35	$\overline{\text{LRST}}$	O	LSI reset (L : Reset, H : Release)	L
36	$\overline{\text{TRCH}}$	O	Track change pulse (L : Change pulse, 27 mS wide)	H
37	$\overline{\text{LIN2}}$	O	Disc tray loading (L : Loading)	H
38	$\overline{\text{POWSW}}$	O	LSI power ON (L : Power ON, H : OFF)	H
39	$\overline{\text{REST}}$		CPU reset (L : Reset)	
40	NC	O	Not used	⎍
41				
42				
43				
44				
45				
46				
47				
48				
49				
50	LOUT	O	Disc tray eject (H : Eject)	–
51	LIN	O	Disc tray loading (H : Loading)	–
52	NC	O	Not used	–
53	DEMP	O	Deemphasis ON/OFF output (H : ON, L : OFF)	–
54	NC	O	Not used	–
55				
56	VLOAD		GND	
57	VPRE		−5V	
58	NC	O	Not used	–
59				
60				
61				
62				
63				
64	V_{DD}		+5V	

Note) H : High level, L : Low level, – : High impedance
*Input port at high impedance in the power OFF mode.

www.manualscenter.com

● PDE034−B (DECK AMP Microprocessor)

- COPY and ASES keys only read by this microprocessor.
- Makes general control of amplifier and deck.
- Creates display data based on the deck status and sends it to the tuner microprocessor.

Note) I : CMOS input N : Nch open drain output
O : CMOS output UN : Pull−up MOS transistor equipped Nch open drain output

Pin No.	Name	I/O	Function	Active
1	SI	N	Used for data transmission to, and reception from, the tuner.	H/L
2	SO	O		H/L
3	SC	O		H/L
4	MUTE IN	I	Mute command signal input	L
5	VOL UP	O	Volume up control terminal	H
6	VOL DOWN	O	Volume down control terminal	H
7	TRCH	I	Not used	L
8	P33	I	Not used (Fixed to "H")	−
9	P40	−	Not used (open)	−
10	4052 INH	UN	Function mute control Function control B A INH TAPE L L L CD L H L TUNER H L L VIDEO H H L Note : When applying function mute, set INH to "H".	H/L
11	4052 A	UN		H/L
12	4052 B	UN		H/L
13	SURROUND	UN	Not used	H
14	KO2	UN	Key scan out	H/L
15	KO1	UN		H/L
16	KO0	UN		H/L
17	AC IN	I	AC pulse input	H/L
18	STANDBY	O	Controls power ON and OFF	H
19	REEL1	I	Mechanism 1 reel pulse input	H/L
20	REEL2	I	Mechanism 2 reel pulse input	H/L
21	2. MOTOR	N	Controls mechanism 2 motor	L
22	SOL2A	N	Controls the solenoid for mechanism 2 play	L
23	SOL2B	N	Controls the solenoid for mechanism 2 FF/REW	L
24	MUTE	UN	Controls the line mute	L
25	P. BASS 1	O	Controls the tone quality control circuit. MODE \ PORT: EXCITE / P.BASS 2 / P.BASS 1 / B.G.M DIRECT: H H H H EXCITE: L L H H BGM: H H H L	H/L
26	BGM	O		H/L
27	EXCITE	O		H/L
28	P. BASS2	O		H/L
29	A/D0	O	Comparator for volume level detection (See Note 1 on page 136)	H/L
30	TEST	−	Not used (connected to GND)	−
31	Vss	−	GND	−
32	OSC1	−	4.19 MHz ceramic lock connection	−

Pin No.	Name	I/O	Function	Active
33	OSC2	–	4.19 MHz ceramic lock connection	–
34	RES	–	Reset terminal	–
35	A/D1	O	Comparator for volume level detection Outputs comparison voltage (See Note 1 on page 136)	L/H
36	A/D2	O		L/H
37	A/D3	O		L/H
38	SOL1A	N	Controls the solenoid for mechanism 1 play	L
39	SOL1B	N	Controls the solenoid for mechanism 1 FF/REW	L
40	1. MOTOR	N	Controls the mechanism motor	L
41	DISCO	N	Not used	L
42	ASES	N	Controls ASES LED	L
43	SPEAKER A	UN	Turns ON/OFF the relay based on surrounding information from the tuner microprocessor. (SPEAKER A: POWER ON = H, POWER OFF = L)	H/L
44	SPEAKER B	UN	Not used	H/L
45	PB3	N	Not used	–
46	VOL LEVEL	I	VOL comparator input terminal (See Note 1 on page 136)	H/L
47	PHONE	I	Headphone ON/OFF detection	H/L
48	PC2	N	Not used	–
49	MS PULSE	I	Not used	H/L
50	KI3	I	Key matrix input	H/L
51	KI2	I		H/L
52	KI1	I		H/L
53	KI0	I		H/L
54	KI4	I		H/L
55	PE1	I	Not used	–
56	MS CTRL	UN	Not used	H/L
57	DOLBY MODE	UN	Controls DOLBY mode P/R switchover	H/L
58	PB CrO_2	UN	Control CrO_2 tape during play	H/L
59	PB 1/2	UN	Controls swtichover between mechanism 1 and 2	H/L
60	FADER	UN	Not used	H
61	BIAS	UN	Controls bias oscillation ON/OFF	L
62	REC CrO_2	UN	When CrO_2 tape exists in mechanism 2 : L	L
63	REC MUTE	UN	Controls REC mute	L
64	V_{DD}	–	+5V	–

www.manualscenter.com

Note 1. Volume Control Position Detector Circuit

This circuit creates volume position data to make the SMART operation and wake up timer function possible.
It controls the volume position when a wide variety of functions are operated by using the data.
The volume position detection is done by A/D0 to A/D3 terminals of pins 29, 35 to 37 of the DECK AMP microprocessor (PDE034−B), volume level terminal of pin 46, DC AMP of IC302−1/2, and comparator of IC302−2/2.
The DC voltage (0V to 0.7V) output from VR601−4/4 for position detection interlocked with the volume control is amplified (see Note 2) by the DC AMP of IC302−1/2, following which it is fed to ⊕ terminal of the comparator of IC302−2/2. Also, the digital data output from A/D0 to A/D3 of the DECK AMP microprocessor (PDE034−B) is converted into analog voltage by the ladder circuit and then fed to the ⊖ terminal of the comparator.
The results of comparison by the comparator are fed to pin 46 of the DECK AMP microprocessor (PDE034−B) for judgment of the comparison results. This process is performed four times, and the digital data of A/D0 to A/D3 output at the fourth time is used as volume position data.
(For further details, refer to "Note 1 : Spectrum analyzer display section" on page 97 given in the XR−Z82 Service Manual (ARP1712).
But judgment is made five times using 5 bits in the case of XR−Z82.

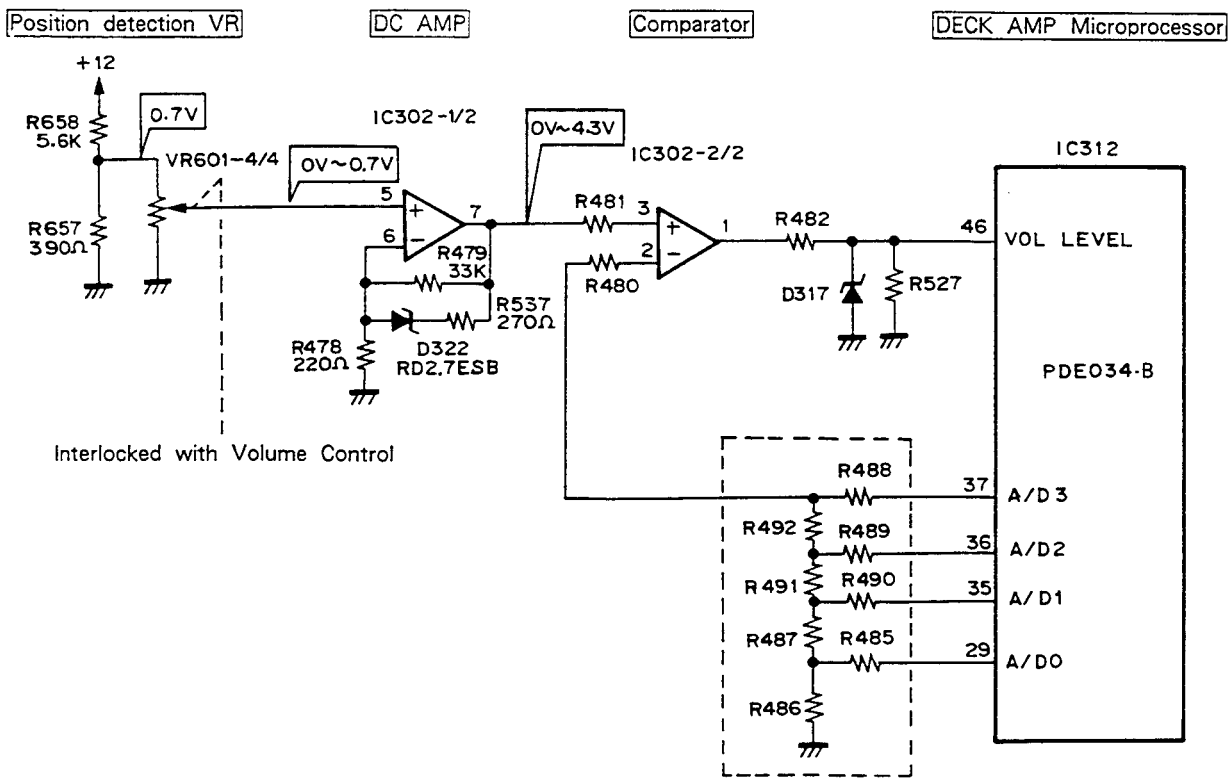

Fig. 9−1. Block Diagram of Volume Position Detection Section

Note 2. DC AMP for VR Position Detection Circuit

The volume control is normally used at a position below twelve hours. D322 (2.7V Zener diode) is inserted in the negative feedback circuit to improve accuracy at below twelve hours for switching the gain characteristics on the boundary of 2.7V.
The normal DC AMP characteristics are shown in Fig. 9−2 and the DC AMP characteristics of a circuit using D322 (RD2.7ESB) in Fig. 9−3.

If the design is made without inserting Zener diode D322 in the feedback circuit, the amplifier output is made linear. As a result, VR positions equally becomes a 1/16 step.
The volume is varied at every 1/16 step because the A/D conversion circuit at the next stage is a 4 bit type.

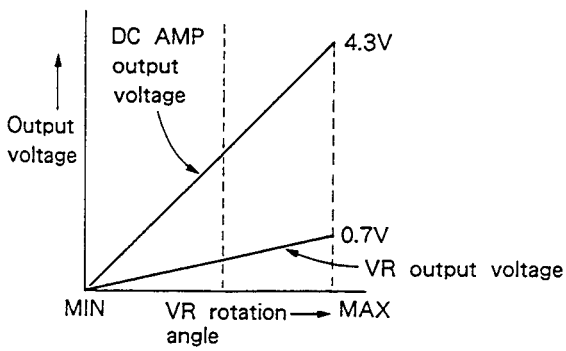

Fig. 9−2.

When the design is made with Zener diode D322 inserted into the negative feedback circuit, the gain of often used band range (below 2.7V output voltage) below the 12−hour position can be set large, which makes it possible to increase the number of steps for the VR rotation angle in that range.
In the range up to the 12−hour position from the minimum position, the resultant accuracy is improved to 1/10 step (equivalent to 1/20 step when compared with the DC AMP which shows linear characteristics).
(Because the Zener diode is turned On at below 2.7V, the gain becomes smaller.)

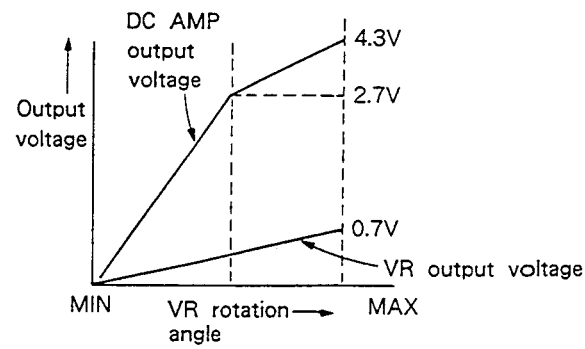

Fig. 9−3.

www.manualscenter.com

10. CIRCUIT OUTLINE

● Sound Control

The sound control of this unit is made by a combination of various circuits given below.

List of Using Circuit Blocks

Mode \ Circuit block	High−band dynamic loudness		Low−band dynamic loudness	Surround	Low−band offset (+3 dB at 70 Hz) Note : SD type only : +4 dB
	Boost (Addition)	Cut (Subtraction)	Boost I	Surround I	
	IC611−1/4··· "ON" IC611−2/4··· "ON"	IC611−3/4··· "ON" IC611−4/4··· "ON"	Q604 only··· "OFF"	Q303 only··· "ON"	Q301, Q302··· "ON"
DIRECT					○
EXCITE	○		○		○
B.G.M.		○		○	

● High−band Dynamic Loudness

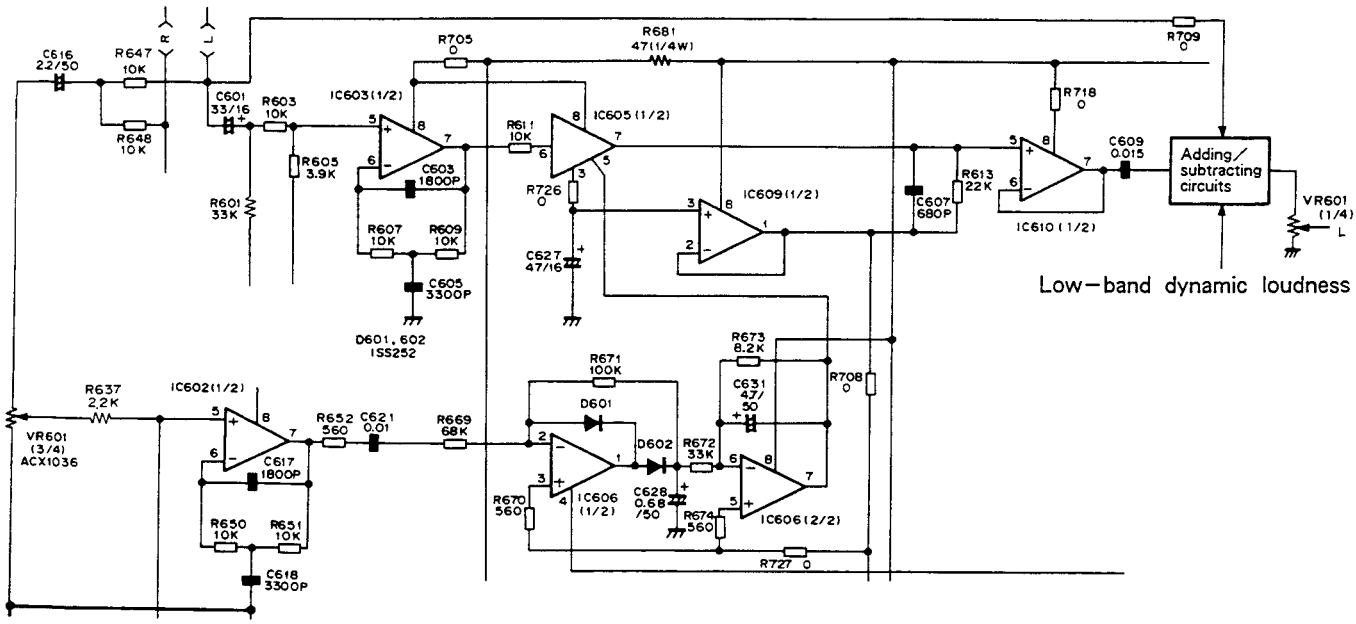

IC1, IC2 form a 7 kHz band (fo) band−pass filter. These ICs are interlocked with VR1, VR2, to cause the level of the VCA control signal to coincide with an audible level.

The control signal level is detected by IC606 (1/2), IC606 (2/2), and VCA IC M5222L is controlled by the detection output.

The signal level versus the VCA output becomes as shown below.

The amount of boost at the time of 10 mV input is about +4 dB during excite ON.

IC609 (1/2) is a buffer amplifier for operating all the circuits at the reference voltage of VCA IC.

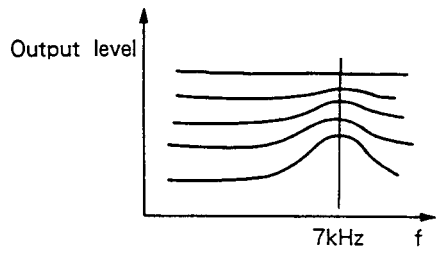

www.manualscenter.com

● Low−band Dynamic Loudness

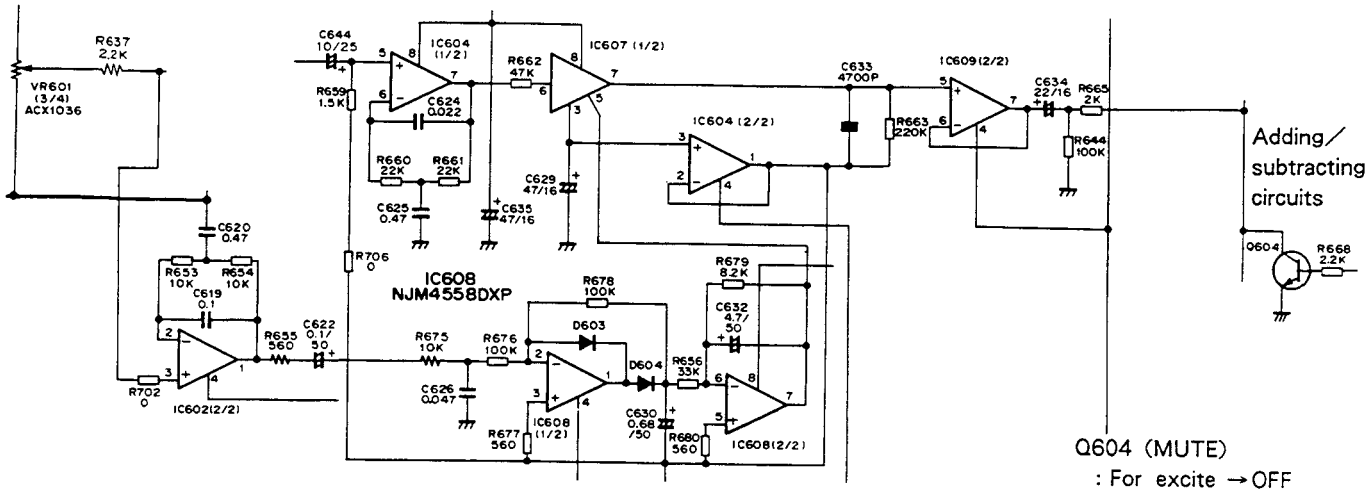

The low−band dynamic loudness is basically the same as the high−band dynamic loudness. Q604 (fo=70 Hz) serve to control the output levels. The amount of boost at the time of 10 mV input is about +6 dB during excite ON.

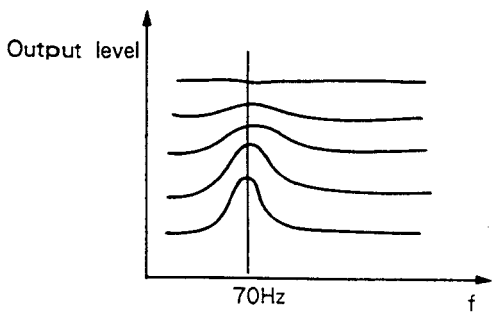

● Adding and Subtracting Circuits

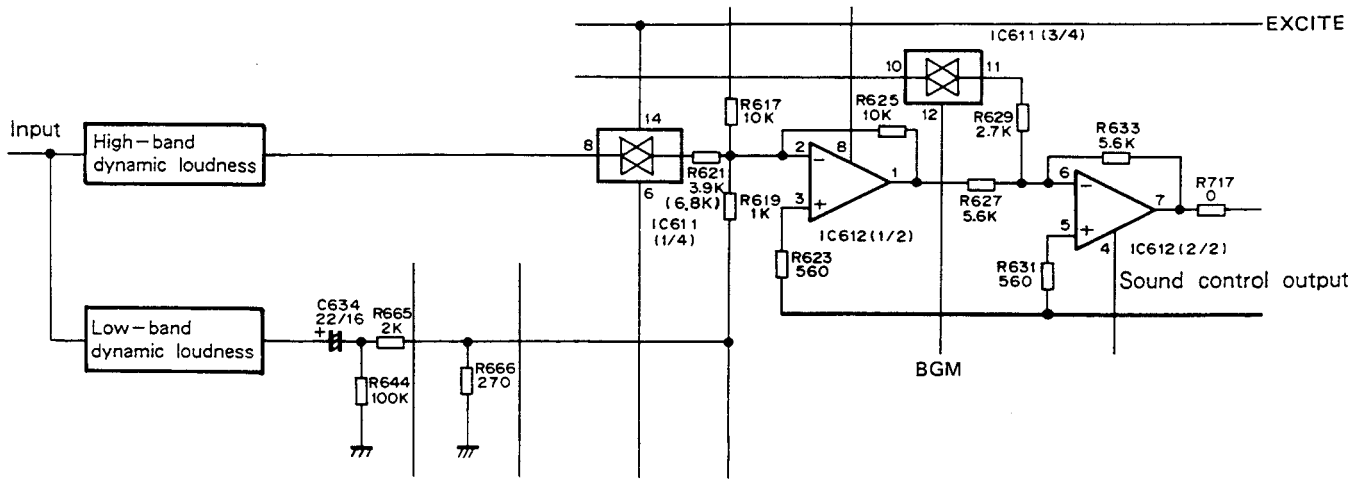

The tone quality control of "EXCITE" and "BGM" is done by adding or subtracting the buffer (IC1) output, low-band dynamic loudness output, and high-band dynamic loudness output.
The selection of addition and subtraction is carried out by means of analog switches SW1 and SW2, and addition is made by IC612 (1/2) and subtraction by IC612 (2/2).
The input and output characteristics and frequency response as well in the case of addition and subtraction are shown in the figures below.

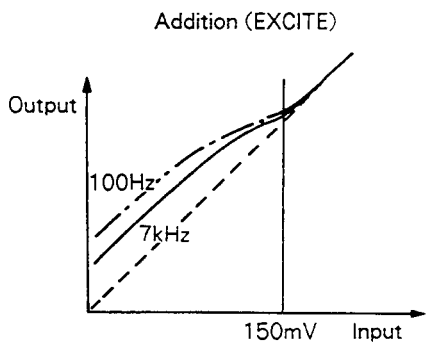

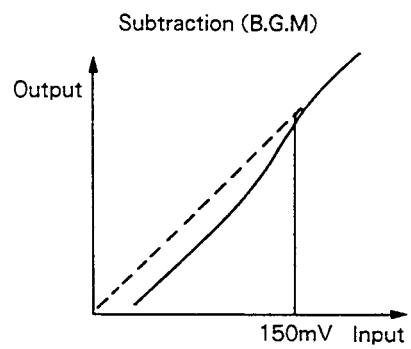

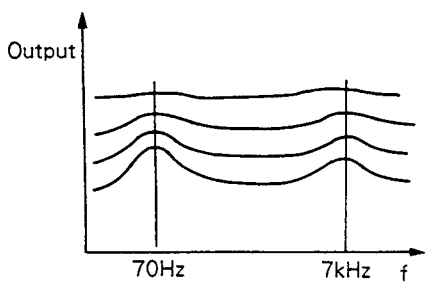

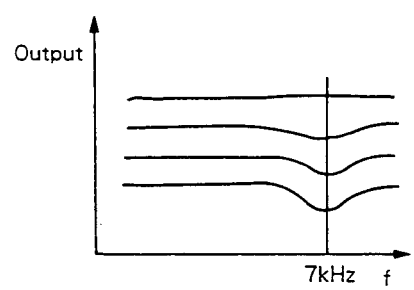

(Low-band dynamic loudness OFF)

www.manualscenter.com

●Surround Circuit and Low Band Offset Circuit

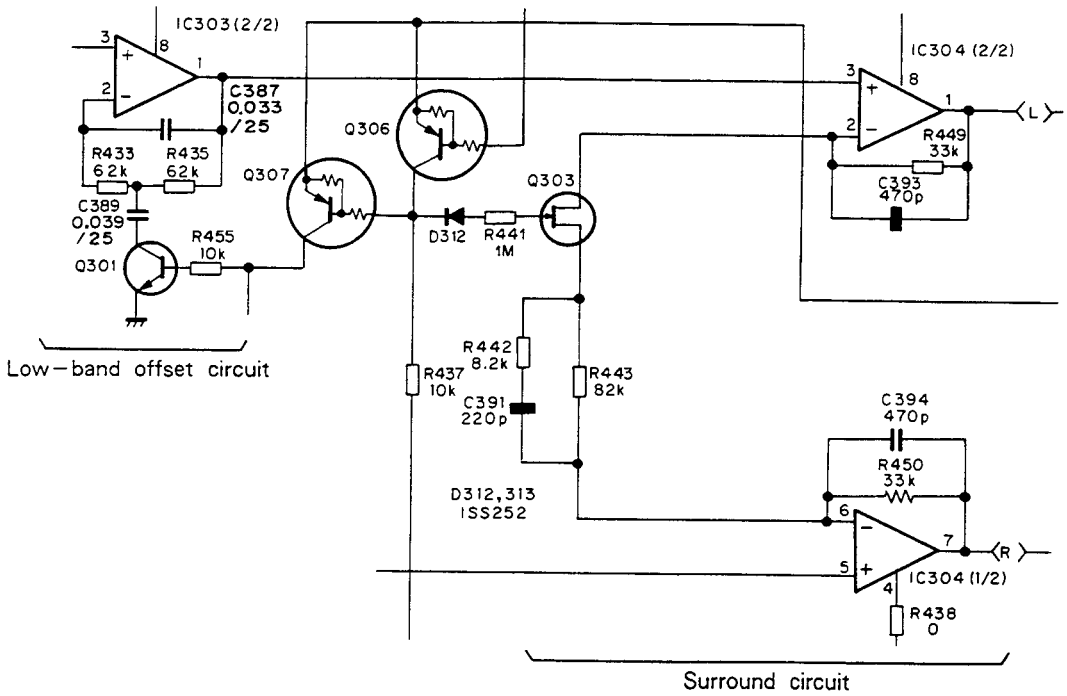

IC303 (2/2) boosts fo=70 Hz. It causes Q301 to be normally turned on, raises the low pass level to the extent of 4 dB, and offsets the low band of the speaker.

During BGM play, Q301 is turned off (dropped to a low band).

The sound level is switched by Q303 and Q304.

During BGM	Q303	ON
During surround	Q304	ON
During BGM+surround	Q303, Q304	ON

11. LINE VOLTAGE SELECTION FOR HE, HB AND HEWZI TYPES

1. Disconnect the AC power cord.
2. Remove the top panel, side panel (L), (R) and rear panel.
3. Change the position of the jumper Ⓐ and fuse (T800mA/250V) as follows.

Voltage	Jumper Ⓐ position	Fuse (T800mA/250V) position
220V	①	③ (FU204)
240V	②	④ (FU201)

4. Stick the line voltage label on the rear panel.

Description	Part No.
220V label	AAX-193
240V label	AAX-192

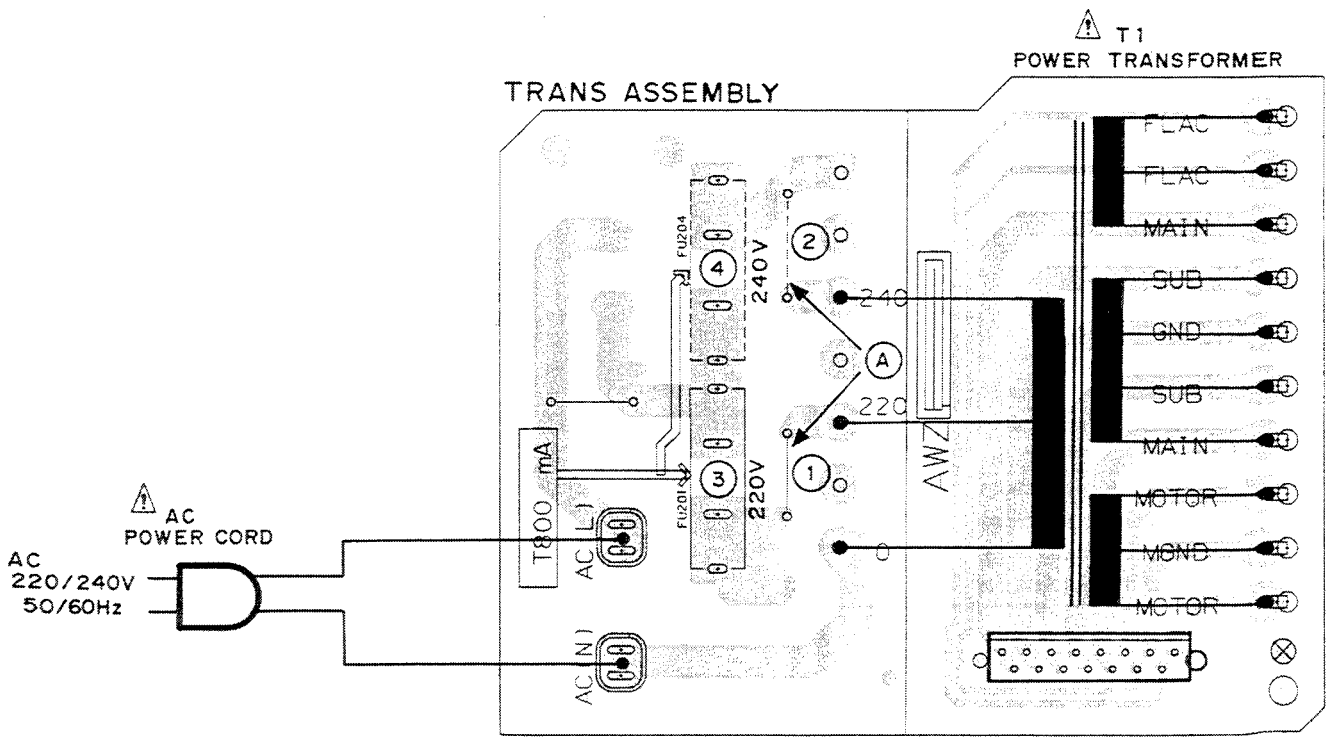

12. FOR XR-P500/HB, HEWZI, YPW AND SD TYPES

NOTES :
- Parts without part number cannot be supplied.
- The ⚠ mark found on some component parts indicates the impotance of the safety factor of the part. Therefore, when replacing, be sure to use parts of identical designation.
- Parts marked by "⊙" are not always kept in stock. Their delivery time may be longer than usual or they may be unavailable.

The XR-P500/HB, HEWZI, YPW and SD types are the same as the XR-P500/HE type with the exception of the following sections.

Mark	Symbol & Description	Part No.					Remarks
		XR-P500/ HE type	XR-P500/ HB type	XR-P500/ HEWZI type	XR-P500/ YPW type	XR-P500/ SD type	
	TX. SOUND CTRL assembly	AWM1248	AWM1248	AWM1256	AWM1259	AWM1255	
	Power assembly	Non supply	Non supply	Non supply	Non supply	Non supply	
	AF assembly	Non supply	Non supply	Non supply	Non supply	Non supply	
	TRANS assembly	Non supply	Non supply	Non supply	Non supply	Non supply	
	DECK SW assembly	Non supply	Non supply	Non supply	Non supply	Non supply	
⚠	AC power cord	ADG1019	ADG-051	ADG1012	ADG-043	ADG1016	
⚠	FU201 Fuse	AEK-031	.....	AEK-031	AEK-031	.....	
⚠	FU202, FU203 Fuse	AEK-405	.....	AEK-405	AEK-405	AEK-405	
⚠	FU201 Fuse	.....	AEK-507	.....	.....	.....	
⚠	FU202, FU203 Fuse	.....	AEK-510	.....	.....	.....	
⚠	FU201, FU204 Fuse	.....	.....	.....	.....	AEK-402	
⚠	Power transformer (AC220/240V)	ATS1256	ATS1256	ATS1256	ATS1256	.....	
⚠	Power transformer (AC110/120-127/220/240V)	.....	.....	.....	.....	ATS1269	
⚠	Voltage selector	.....	.....	.....	.....	AKX-507	
	Capacitor	.....	.....	ACG1003	.....	.....	
	Spacer	.....	.....	AEC1236	.....	.....	
	Packing case	AHD1821	AHD1821	AHD1821	AHD1851	AHD1851	
	FM antenna	ADH1005	ADH1005	.....	ADH1005	ADH1005	
	FM antenna assembly	.....	.....	ADH1002	.....	.....	
	Operating instructions	ARC1208	.....	.....	.....	.....	
	Operating instructions	ARE1160	.....	.....	.....	.....	
	Operating instructions	.....	ARB1231	.....	ARB1231	ARB1231	
	Operating instructions	.....	.....	ARC1211	.....	.....	
	Operating instructions	.....	.....	.....	.....	ARC1210	

www.manualscenter.com

TX. SOUND CTRL ASSEMBLY

The TX. SOUND CTRL assemblies of XR-P500/HEWZI, YPW and SD types are the same as the TX. SOUND CTRL assembly of XR-P500/HE type with the exception of the following sections.

Mark	Symbol & Description	Part No.				Remarks
		AWM1248	AWM1256	AWM1259	AWM1255	
	C851	CEANP4R7M35	CEAS100M50	CEANP4R7M35	CEANP4R7M35	
	C857, C868	CKCYB472K50	CKCYB332K50	CKCYB472K50	CKDYB682K50	
	C869	.....	CEANP4R7M35	.....	.....	
	C870	.....	CKSQYB681K50	.....	.....	
	F801	ATF-126	ATF-119	ATF-126	ATF-126	
	F802	ATF-126	ATF-107	ATF-126	ATF-126	
	F804	.....	ATF-146	.....	.....	
	Q852	.....	2SC1740S	.....	.....	
	R852	RS 1/10 S823J	RS 1/10 S683J	RS 1/10 S823J	RS 1/10 S823J	
	R861, R862	RS 1/10 S332J	RS 1/10 S562J	RS 1/10 S332J	RS 1/10 S332J	
	R867	.....	RD 1/8 PM224J	.....	.....	
	R868	.....	RD 1/8 PM683J	.....	.....	
	R869	.....	RD 1/8 PM472J	.....	.....	
	R870	.....	RD 1/8 PM222J	.....	.....	
	R871	.....	RS 1/10 S472J	.....	.....	
	F.E MODULE assembly	AXQ1002	AXQ1004	AXQ1002	AXQ1002	
	AM, RF turning	AXX1011	AXX1014	AXX1011	AXX1011	
	TC801	.....	ACM-018	.....	.....	
	Antenna terminal 4P (PAL)	AKA1010	.....	.....	AKA1010	
	Antenna terminal 2P (PAL)	.....	AKA1015	.....	.....	
	Antenna terminal 4P	.....	.....	AKA1009	AKA1009	
	C853, C854	CKSQYB102K50	CKSQYB102K50	CKSQYB102K50	CKSQYB122K50	
	R621, R622	RS 1/10 S392J	RS 1/10 S392J	RS 1/10 S392J	RS 1/10 S682J	
	S801 Slide switch	.....	.....	.....	ASH1009	

POWER ASSEMBLY

The POWER assembly of XR-P500/HEWZI type is the same as the POWER assembly of XR-P500/HE type with the exception of the following sections.

Mark	Symbol & Description	Part No.		Remarks
		XR-P500/ HE type	XR-P500/ HEWZI type	
	C251, C252, C263, C264	.....	CCDSL101J50	
	C253, C254	.....	CKCYF103Z50	
	C255, C256, C261	.....	CKDYF103Z50	
	L201, L202	ATH-133	ATH-059	
	L205, L206	.....	ATH-059	
	R219, R220	RD1/4PMFL100J	RD1/4PMFL101J	

AF ASSEMBLY

The AF assemblies of XR−P500/HEWZI and SD types are the same as the AF assembly of XR−P500/HE type with the exception of the following sections.

Mark	Symbol & Description	Part No.			Remarks
		XR−P500/ HE type	XR−P500/ HEWZI type	XR−P500/ SD type	
	C381−C384	.....	CCSQCH391J50	.....	
	C387, C388	CKCYX333M25	CKCYX333M25	CKCYX393M25	
	C389, C390	CKCYX393M25	CKCYX393M25	CKCYX333M25	
	C421, C422, C425−C428	.....	CCDSL101J50	.....	
	C423, C424	.....	CKDYX473M25	.....	

DECK SW ASSEMBLY

The DECK SW assembly of XR−P500/HEWZI type is the same as the DECK SW assembly of XR−P500/HE type with the exception of the following sections.

Mark	Symbol & Description	Part No.		Remarks
		XR−P500/ HE type	XR−P500/ HEWZI type	
	C971−C973	.....	CKDYX473M25	
	R973	.....	RD 1/8 PM100J	

● PACKING FOR YPW AND SD TYPES

Note :

- XR−P500/YPW and SD types are packed with the speaker system (S−P500D/E).
- Refer to S−P500D/E service manual (Order No. ARP1925) for the speaker system.

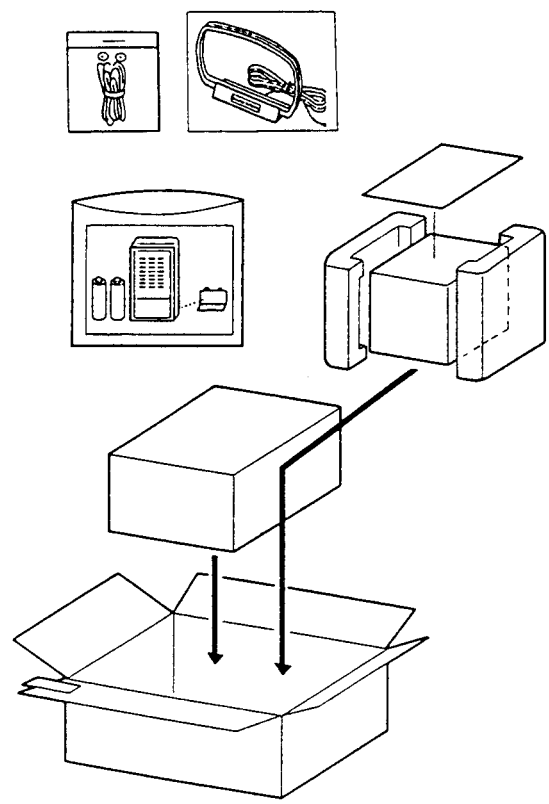

13. PANEL FACILITIES

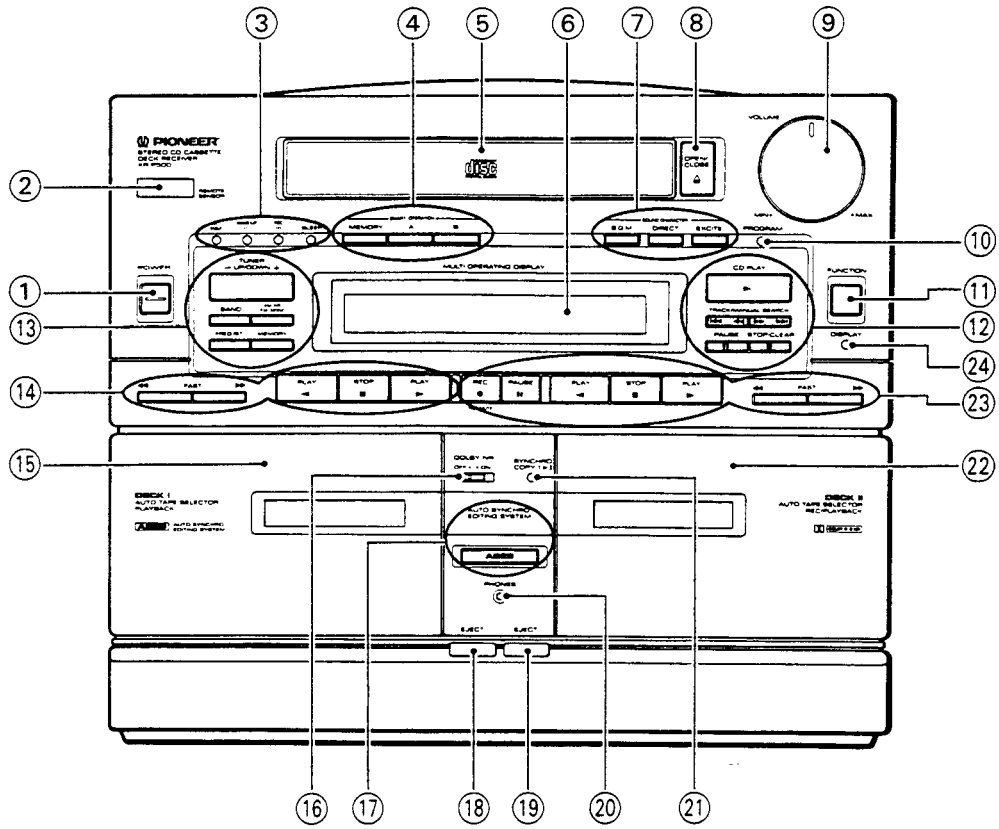

① POWER STANDBY/ON switch

This is the switch for electric power.

ON: When set to the ON position, power is supplied and the unit becomes operational.

STANDBY: When set to the STANDBY position, the main power flow is cut and the unit is no longer fully operational. A minute flow of power feeds the unit to maintain operation readiness.
The unit is on STANDBY when the display section indicates only the time.

② REMOTE SENSOR window

③ Timer operation switches

SET (ADJ):
Used for starting the clock adjustment (ADJ function).
Used for current time, timer playback and timer recording (SET function).

WAKE UP (–):
Used for timer playback setting (WAKE UP function).
Used for adjusting the clock, timer settings and its related adjustment ("–" function).

REC (+):
Used for timer recording setting (REC function).
Used for adjusting the clock, timer settings and its related adjustment ("+" function).

SLEEP:
Used for the sleep timer setting.

④ SMART OPERATION switches

Use these to memorize and recall your usual listening settings (function, SOUND CHARACTER, volume, etc.)

MEMORY: Use to memorize your favorite settings.

A, B: Use to memorize and recall your favorite settings.

⑤ CD disc tray

⑥ Display

⑦ SOUND CHARACTER switches

Recall just the sound you want by operating a switch.

B.G.M.: This gives you a wide sound with lowered bass and treble response.

DIRECT: This lets you listen to sound coming directly from the source by switching all sound adjusting circuitry off.

EXCITE: Use this to boost bass and treble for a powerful more dynamic sound.

⑧ OPEN/CLOSE (⏏) switch

Press when you wish to eject or load a disc. Each time the switch is pressed, the tray is alternately pushed out or pulled in.

⑨ VOLUME control

www.manualscenter.com

⑩ PROGRAM switch

This is used for programming tracks to play in a desired sequence.

⑪ FUNCTION switch

Use to select the component you want to play. Each time you press the switch, the component changes in the following order.

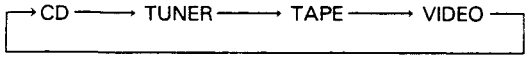

⑫ CD operation switches

► CD PLAY:
Press to begin CD playback, and to cancel the pause mode.
|◄◄, ►►| TRACK SEARCH/ ◄◄, ►► MANUAL SEARCH:
Press and release quickly, and it operates as the TRACK SEARCH function.
Continue pressing and it operates as the MANUAL SEARCH function.
II PAUSE:
Press to temporarily interrupt playback. When pressed again, the pause mode is cancelled and playback resumes.
■ STOP/CLEAR:
When you press it, play and all other operations stop. If you press it when it is in the STOP mode, the program is cleared from memory.

⑬ Tuner operation switches

TUNER UP (+)/DOWN (–):
Use to locate stations.
If you select the frequency mode with the FREQ./ST. switch, frequency changes up/down.
If you select station mode with the FREQ./ST. switch, station number changes up/down.
BAND:
Each time this switch is pressed, FM or AM reception is selected alternately.
AM NR/FM MONO:
When receiving an AM broadcast, this operates as a noise reduction (AM NR) switch.
If you are listening to an FM stereo broadcast that has a lot of noise, you can use this switch to reduce the noise by changing reception to monaural reception (FM MONO).
FREQ./ST.:
Use to change the operation mode of the TUNER UP/DOWN switch.
MEMORY:
Use to memorize stations.

⑭ DECK I operation switches

- **► PLAY (FWD)** ..... For playing back a tape in the forward mode.
- **◄ PLAY (REV)** ..... For playing back a tape in the reverse mode.
- **■ STOP** ..... For stopping the tape.
- **►► FAST** ..... Fast forward in forward mode, rewind in reverse mode.
- **◄◄ FAST** ..... Rewind in forward mode, fast forward in reverse mode.

⑮ DECK I cassette door

⑯ DOLBY* NR switch

Set this switch to the ON position to activate the DOLBY NR system.

- Tapes recorded using Dolby noise reduction should always be played back with the noise reduction system on. Sound quality will be adversely affected if played back with the system off, or if tapes recorded using a different noise reduction system are played back with the Dolby NR system on.
- It is recommended that tapes recorded with Dolby B type NR be so marked on the label. This will help prevent incorrect setting of the noise reduction switch during playback.

*

Dolby noise reduction manufactured under license from Dolby Laboratories Licensing Corporation.
"DOLBY" and the double-D symbol DD are trademarks of Dolby Laboratories Licensing Corporation.

⑰ A.S.E.S. (Auto Synchro Editing System) switch/indicator.

Use to automatically record a CD on a cassette tape.
Press once to switch to the FULL FILL mode. This assures that recording will continue until the tape is full.
Press twice to switch to the LINK mode. If the playing time of the disc is shorter than that of the tape, change the disc and resume recording.

⑱ DECK I EJECT switch

⑲ DECK II EJECT switch

⑳ PHONES (Headphones) jack

For stereo headphones.

NOTE:
There is no output from the speakers when headphones are plugged into PHONES jack.

㉑ SYNCHRO COPY (I ► II) switch

Used for tape copying.

㉒ DECK II cassette door

㉓ DECK II operation switches

- **► PLAY (FWD)** ..... For playing back a tape in the forward mode.
- **◄ PLAY (REV)** ..... For playing back a tape in the reverse mode.
- **■ STOP** ..... For stopping the tape.
- **►► FAST** ..... Fast forward in forward mode, rewind in reverse mode.
- **◄◄ FAST** ..... Rewind in forward mode, fast forward in reverse mode.

● **REC/REC MUTE** .. Press to set to recording standby mode. Press the PLAY switch (◄ or ►) to begin recording. If you press it while recording, it operates as a REC MUTE switch, preventing anything being recorded until you release it. Releasing it puts you in the REC PAUSE mode.

II PAUSE ..... Temporarily stops tape travel. Cancels pause mode when pressed again or press the PLAY switch.

㉔ DISPLAY switch

Use to switch between different display modes in the display section.

Display Section

• **Built-in Proper Bass Active Supply System**
This system provides a rich, deep bass sound, even with small speakers, by boosting the bass at the amp stage. (The bass is boosted even if SOUND CHARACTER is in the DIRECT position.)

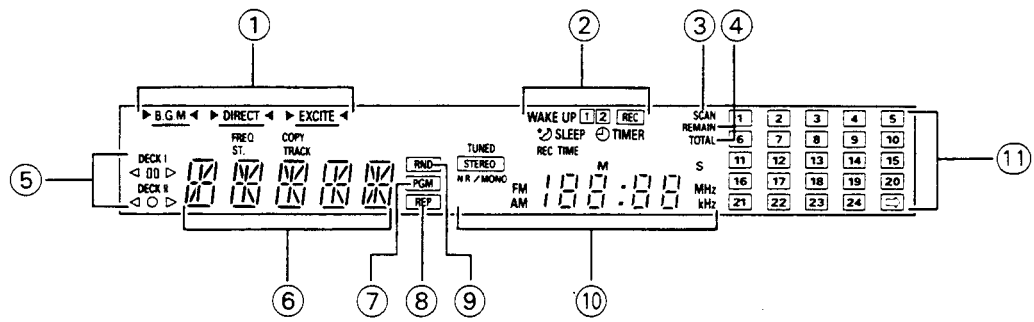

① Press one of the SOUND CHARACTER switches and it lights.

② Displays timer settings.

③ Lights during SCAN operation.

④ Switched with the DISPLAY switch.

REMAIN: Displays the track number and the time remaining for the track being played. Press again and the time remaining for of the discs is displayed.
During programmed play, only the time remaining for the track being played is displayed.

TOTAL: This displays the total number of tracks and total time for a disc or program.

⑤ Displays operations on DECK I, DECK II and CD player.

⑥ Displays the function. In the TUNER mode, this displays the Station No., and when playing a CD it displays the track number. (During programmed play it displays the step number).

⑦ Indicates CD programmed play is in progress.

⑧ Indicates CD repeat play is in progress.

⑨ Indicates CD random play is in progress.

⑩ This lights during broadcast reception.

In the TUNER mode, frequency is displayed. At any other time it displays the time.

STEREO: Lights during stereo broadcast reception.

NR/MONO: During FM reception, this lights to indicate that the AM NR/FM MONO switch is operating, converting reception to monaural.
During AM reception, this lights to indicate that the AM NR/FM MONO switch is operating and AM NR is ON.

⑪ When a CD is playing, this displays the track numbers for the remaining tracks. Any tracks after Track No.25 are displayed as →. During TUNER operation, this displays the station number.

Illustration shows U.K. model.

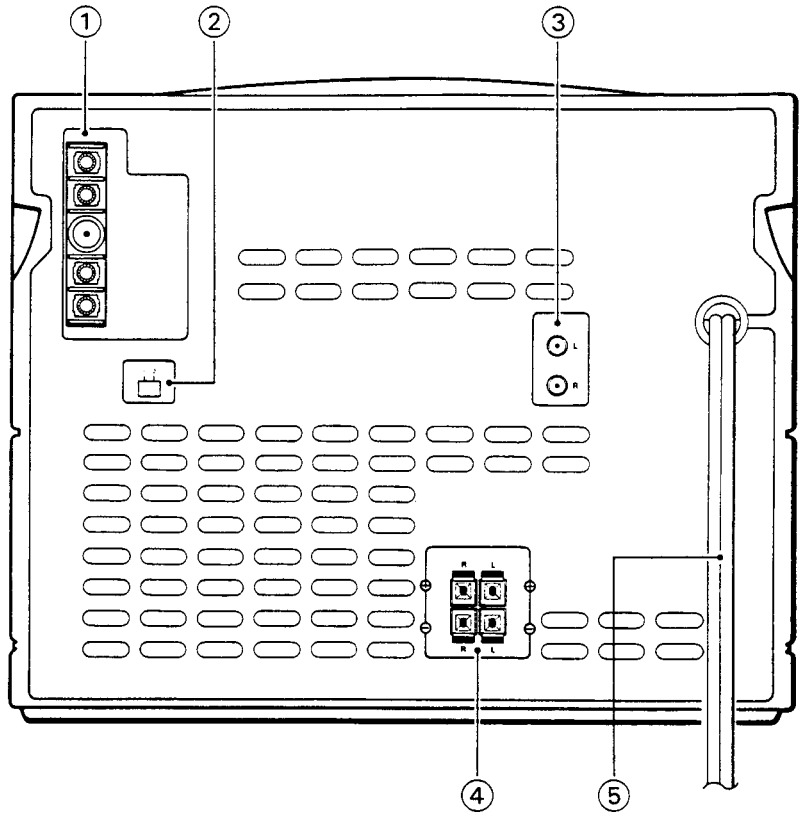

① FM/AM ANTENNA terminals

Antennas must be connected to these terminals, otherwise you will be unable to receive broadcast signals.

② BEAT CUT switch

Set to the position that gives the least noise when recording AM broadcasts, or when noise is recorded when making tape copies during reception of AM broadcasts.

③ VIDEO AUDIO IN jacks

Connect to audio output jacks of LD player or VCR, etc.

④ SPEAKERS terminals

L: Connect the left speaker system (left as seen from the listening position).

R: Connect the right speaker system (right as seen from the listening position).

NOTE:

Connect a speaker system having a nominal impedance ranging from 8 Ω to 16 Ω.

⑤ Power cord

Connect this to the AC wall socket.

www.manualscenter.com

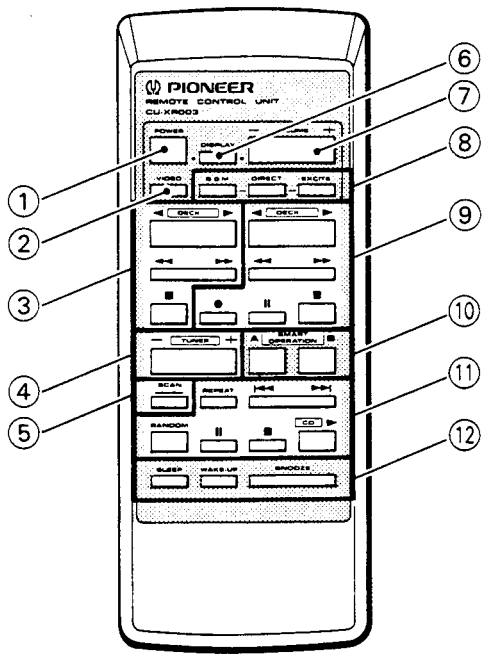

① POWER key

② VIDEO key

Sets function to VIDEO.

③ DECK I operation keys

These have the same functions as the main unit's DECK I operation switches ⑭.

④ TUNER (–, +) key

Press once to switch to the TUNER function. After that it recalls memorized station numbers.

+ ..... Stations change in order in the upward direction.

– ... Stations change in order in the downward direction.

⑤ SCAN key

- Press during broadcast reception, and stations memorized in station call will be received and change in order every three seconds. (memory scan). Press once more, and it stops operating.
- If you press this when the function is CD, and the CD player is in the STOP mode, it plays ten second sections of all tracks, about one minute into each track.
- If you press the SCAN key while a CD is playing, the elapsed time of the track playing is memorized, and then ten second sections of the following tracks are played in sequence from the memorized time.

⑥ DISPLAY key.

This changes the display section's display mode.

⑦ VOLUME –, + key

When pressed, VOLUME is actually moved by motor.

⑧ Sound character recall keys

⑨ DECK II operation keys

These have the same functions as the main unit's DECK II operation switches ㉓.

⑩ SMART OPERATION A, B keys.

Recalls smart operation memories A and B.

⑪ CD operation keys

RANDOM: Press to begin random playback.

►: Playback

|◄◄, ►►|: Track search

II: Pause

■: Stop

REPEAT: Press for all tracks repeat playback.

⑫ Timer operation keys

SLEEP:

Sets the sleep timer. Each time you press this key, the setting changes as shown here. The current setting is shown on the display section.

Power turns off when your set time has elapsed.

(AUTO) → 90 (Approx.90 minutes) → 60 (Approx.60 minutes) → 30 (Approx.30 minutes) → 00 (OFF) → (AUTO)

AUTO:

When recording and during tape playback, power switches OFF when the CD or tape finish.

If you press the SLEEP key during SLEEP operation, the display will show the time remaining till power turns off.

WAKE UP:

Timer playback setting/cancellation can be performed when the timer playback time has been set. This is shown in the display section.

SNOOZE:

Turns off power if pressed after timer playback begins. Timer playback begins again approx. 5 minutes later.

Range of remote control

When the remote control unit is pointed at the remote sensor window and any of its keys is pressed, XR-P500 can be operated by remote control.

Distance: Within a range of approx. 7 meters from the remote sensor window.

Angle: Within approx. 30 degrees from the center of the remote sensor window.

Remote control will not be possible if there is an obstacle between the remote control unit itself and the remote sensor window.

Performance of the remote control unit is adversely affected in the presence of strong fluorescent light. Keep such lights away, especially from the sensor window.

14. SPECIFICATIONS

Amplifier Section

Continuously Average Power Output is 15 Watts* per channel, min., at 8 ohms from 40 Hertz to 20,000 Hertz, with no more than 0.4 % total harmonic distortion.

* Measured pursuant to the Federal Trade Commission's Trade Regulation rules on Power Output Claims for Amplifiers.

Music power (DIN) ..... 35 W + 35 W
Continuous Power Output (DIN) ..... 25 W + 25 W
(1 kHz, T.H.D. 1%, 8 Ω)
[Multi-voltage model]
Music power ..... 50 W + 50 W
Peak music power ..... 200 W
Hum & Noise (DIN, continuous Power/50 mW)
..... 68 dB/60 dB
Total Harmonic Distortion
(40 Hz to 20,000 Hz, 12.5 W, 8 ohms)**VIDEO
..... No more than 0.2%

FM/AM tuner section

FM Tuner Section

Frequency range ..... 87.5 MHz to 108 MHz
Usable Sensitivity... Mono: 12.8 dBf, IHF (1.2 μV/75 ohms)
Sensitivity (DIN) ..... Mono S/N 26 dB: 0.8 μV/75 Ω
Stereo S/N 46 dB: 31.5 μV/75 Ω
Signal-to-Noise Ratio (IHF, 85 dBf Input) .... Mono: 74 dB
Signal-to-Noise Ratio (DIN) ..... Mono: 64 dB
Stereo: 61 dB
Distortion ..... Stereo: 0.4 % (1kHz)
Stereo separation ..... 40 dB (1kHz)
Antenna Input ..... 75 ohms unbalanced

MW (AM) Tuner Section

Frequency Range
With 10 kHz step ..... 530 kHz to 1,700 kHz
With 9 kHz step ..... 531 kHz to 1,602 kHz
Sensitivity (IHF, Loop antenna) ..... 250 μV/m
Antenna ..... Loop Antenna

Cassette Deck Section

Systems ..... 4 track, 2-channel stereo
Heads ..... Recording/playback head x 1
Playback head x 1
Erasing head x 1
Motor ..... DC servo motor x 2
Wow and Flutter ..... No more than 0.09 % (WRMS)
Frequency Response (−20 dB recording):
CrO_2 tape ..... 35 Hz to 15,000 Hz ±6 dB
Signal-to-Noise ratio
Dolby NR OFF ..... 56 dB (EIAJ)
Noise Reduction Effect
Dolby B type NR ON ..... More than 10 dB (at 5 kHz)

CD Section

Type ..... Compact disc digital audio system
Signal to Noise ratio ..... 98 dB or more (EIAJ)
Dynamic range ..... 92 dB or more (EIAJ)
Wow and flutter ..... Limit of measurement
(±0.001% W.PEAK) or less (EIAJ)

Miscellaneous

Power requirements
U.K. and Australian model.. a.c. 240 Volts~, 50/60 Hz
Multi-voltage models
... AC 110/120−127/220/240 V (switchable), 50/60 Hz
Power Consumption ..... 170 W
Dimensions ..... 300 (W) x 255 (H) x 246 (D) mm
11-13/16 (W) x 10-1/16 (H) x 9-11/16 (D) in
Weight (without package) ..... 7.1 kg (15 lb 11 oz)

Furnished Parts

Operating Instructions 1
Remote Control Unit 1
Dry Cell Batteries 2

www.manualscenter.com