ORDER NO. MB9801003C2

Service Manual

Compact Disc Player

Compact Disc Player

SL-PG390

COMPACT disc DIGITAL AUDIO

MASH*
multi-stage noise shaping

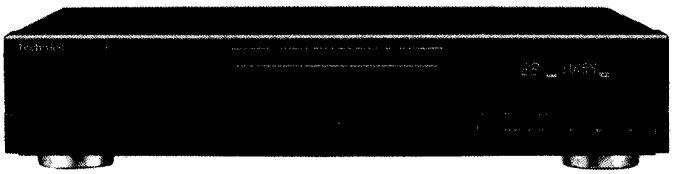

Colour
(K) ..... Black Type

Area
(E) ..... Europe.
(EB) ..... Britain.
(EG) ..... Germany and Italy.
(EP) ..... Russia.

www.manualscenter.com

RAE1100Z MECHANISM SERIES

Specifications

■ Audio

No. of channels	2 (left and right, stereo)
Frequency response	2 – 20,000 Hz, ± 1 dB
Output voltage	2 V (at 0 dB)
Dynamic range	92 dB
S/N	100 dB
Harmonic distortion	0.005 % (1 kHz, 0 dB)
Total harmonic distortion	0.007 % (1 kHz, 0 dB)
Wow and flutter	Below measurable limit
DA converter	MASH (1 bit)
Output impedance	1 kΩ
Load impedance	More than 10 kΩ

■ Pickup

Wavelength	780 nm
Laser Power	No hazardous radiation is emitted (with safety protection)

■ General

Power consumption	13 W
Power supply	AC 50/60 Hz, 230 – 240 V
Dimensions (W × H × D)	430 × 92 × 283 mm
Weight	3.1 kg

Note:
Specifications are subject to change without notice.
Weight and dimensions are approximate.

For United Kingdom only:
This apparatus was produced to BS 800.

*
MASH is a trademark of NTT.

⚠WARNING
This service information is designed for experienced repair technicians only and is not designed for use by the general public. It does not contain warnings or cautions to advise non-technical individuals of potential dangers in attempting to service a product.
Products powered by electricity should be serviced or repaired only by experienced professional technicians. Any attempt to service or repair the product or products dealt with in this service information by anyone else could result in serious injury or death.

Technics®

© 1998 Matsushita Electric Industrial Co., Ltd.
All rights reserved. Unauthorized copying and distribution is a violation of law.

■ Contents

	Page
Handling Precautions for Traverse Deck	2
Precaution of Laser Diode	2, 3
Accessories	3
Connections	3
Caution for AC Mains Lead	4
Front Panel Controls	5
Sequential Play	5
Self-Diagnostic Function	6, 7
Operation Checks and Main Component Replacement Procedures	8 – 12
Schematic Diagram	13 –17
Block Diagram	18, 19
Printed Circuit Board Diagram	20, 21
Wiring Connection Diagram	22
Terminal Function of IC's	23 – 25
Troubleshooting Guide	26, 27
Cabinet Parts Location	28, 29
Loading Unit Parts Location	30
Packaging	31
Replacement Parts List	32, 33

■ Handling Precautions for Traverse Deck

The laser diode in the traverse deck (optical pickup) may break down due to potential difference caused by static electricity of clothes or human body. So, be careful of electrostatic breakdown during repair of the traverse deck (optical pickup).

• Handling of traverse deck (optical pickup)

1. Do not subject the traverse deck (optical pickup) to static electricity as it is extremely sensitive to electrical shock.
2. To prevent the breakdown of the laser diode, an anti-static shorting pin is inserted into the flexible board (FFC board).
   When removing or connecting the short pin, finish the job in as short time as possible.
3. Take care not to apply excessive stress to the flexible board (FFC board).
4. Do not turn the variable resistor (laser power adjustment). It has already been adjusted.

• Grounding for electrostatic breakdown prevention

1. Human body grounding
   Use the anti-static wrist strap to discharge the static electricity from your body.
2. Work table grounding
   Put a conducive material (sheet) or steel sheet on the area where the traverse deck (optical pickup) is placed, and ground the sheet.

Caution:
The static electricity of your clothes will not be grounded through the wrist strap. So, take care not to let your clothes touch the traverse deck (optical pickup).

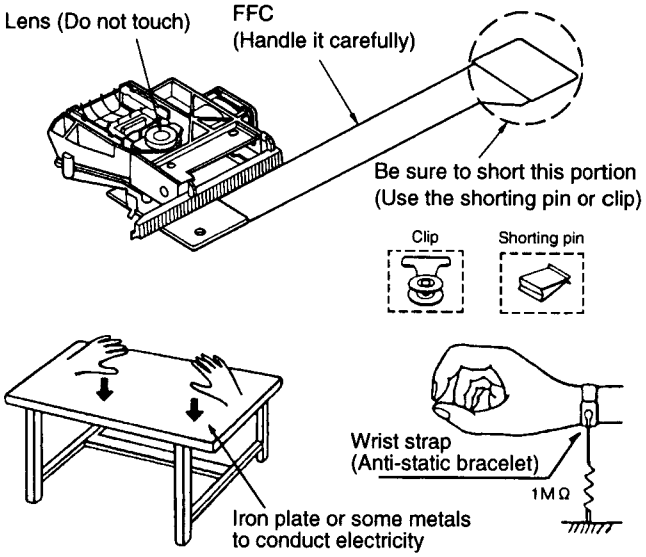

CAUTION:
THIS PRODUCT UTILIZES A LASER.
USE OF CONTROLS OR ADJUSTMENTS OR PERFORMANCE OF PROCEDURES OTHER THAN THOSE SPECIFIED HEREIN MAY RESULT IN HAZARDOUS RADIATION EXPOSURE.

■ Precaution of Laser Diode

CAUTION: This product utilizes a laser diode with the unit turned "on", invisible laser radiation is emitted from the pick up lens.
Wave length: 780 nm
Maximum output radiation power from pick up: 100 μW/VDE

Laser radiation from the pick up unit is safety level, but be sure the followings:

1. Do not disassemble the pick up unit, since radiation from exposed laser diode is dangerous.
2. Do not adjust the variable resistor on the pick up unit. It was already adjusted.
3. Do not lock at the focus lens using optical instruments.
4. Recommend not to lock at pick up lens for a long time.

ACHTUNG: Dieses produkt enthält eine laserdiode. Im eingeschalteten zustand wird unsichtbare laserstrahlung von der lasereinheit adgestrahit.
Wellenlänge: 780 nm
Maximale strahlungsleistung der laserinhelt: 100 μW/VDE

Die strahlung an der lasereinheit ist ungefährlich, wenn folgende punkte beachtet werden:

1. Die lasereinheit nicht zerlegen, da die strahlung an der freigelegten laserdiode gefähriich ist.
2. Den werksseitig justierten einstellregler der lasereinreit nicht verstellen.
3. Nicht mit optischen instrumenten in die fokussierlinse blicken.
4. Nicht über längere zeit in die fokussierlinse blicken.

www.manualscenter.com

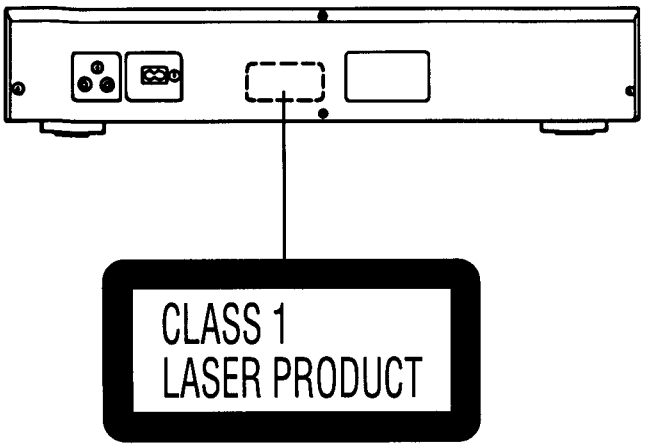

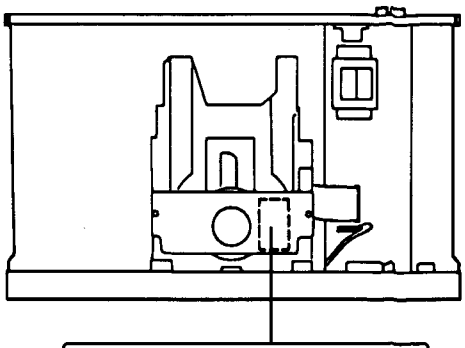

DANGER	INVISIBLE LASER RADIATION WHEN OPEN. AVOID DIRECT EXPOSURE TO BEAM.
ADVARSEL	USYNLIG LASERSTRÅLING VED ÅBNING, NÅR SIKKERHEDSAFBRYDERE ER UDE AF FUNKTION. UNDGÅ UDSÆTTELSE FOR STRÅLING.
VARO!	AVATTAESSA JA SUOJALUKITUS OHITETTAESSA OLET ALTIINA NÄKYMÄTÖNTÄ LASERSÄTEILYLLE. ÄLÄ KATSO SÄTEESEEN.
VARNING	OSYNLIG LASERSTRÅLNING NÄR DENNA DEL ÄR ÖPPNAD OCH SPÄRREN ÄR URKOPPLAD. BETRAKTA EJ STRÅLEN.
ADVARSEL	USYNLIG LASERSTRÅLING NÅR DEKSEL ÅPNES OG SIKKERHEDSLÅS BRYTES. UNNGÅ EKSPONERING FOR STRÅLEN.
VORSICHT	UNSICHTBARE LASERSTRAHLUNG, WENN ABDECKUNG GEÖFFNET. NICHT DEM STRAHL AUSSETZEN.

■ Accessories

AC mains lead ..... 1 pc.
(For United Kingdom : RJA0044-C) (For others : RJA0043-C)

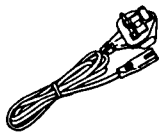

Stereo connection cable ..... 1 pc.
(SJP2249-3)

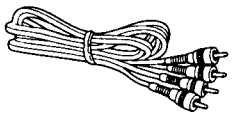

■ Connections

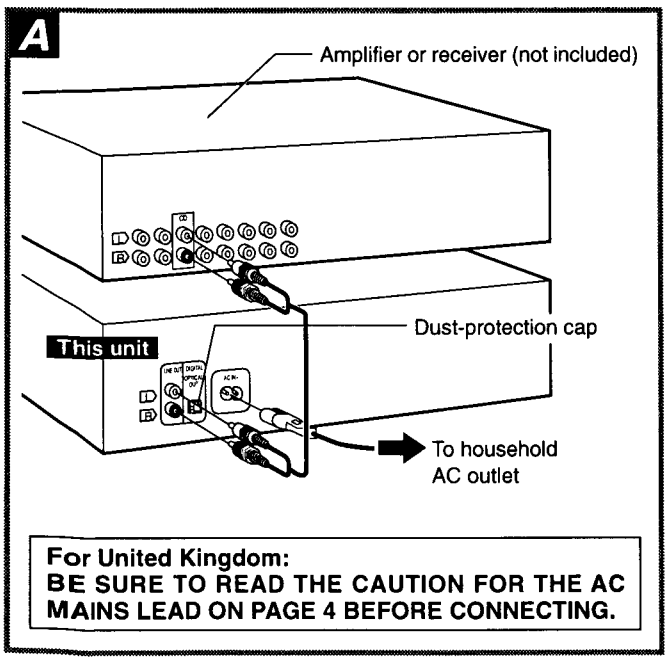

For United Kingdom:
BE SURE TO READ THE CAUTION FOR THE AC MAINS LEAD ON PAGE 4 BEFORE CONNECTING.

Before making connections, be sure that the power of this unit and all other system components is first turned off. A

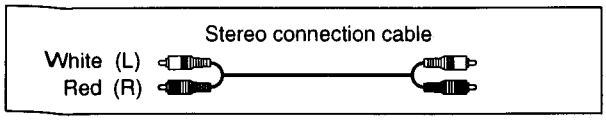

Note
Although the figure shows the AC power supply cord being connected to a household AC outlet, if the amplifier (or receiver) is equipped with a AC outlet, connect the cord to that outlet.

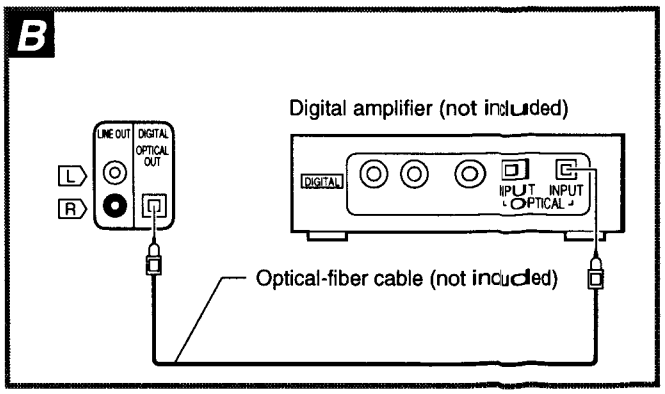

To connect a digital amplifier B

Note
Remove the dust-protection cap which is inserted in the DIGITAL OPTICAL OUT terminal only if you connect a digital amplifier.
When this terminal is not being used, attach the caps shown in the illustration.

www.manualscenter.com

■ Caution for AC Mains Lead

(For United Kingdom)

("EB" area code model only)

For your safety, please read the following text carefully.

This appliance is supplied with a moulded three pin mains plug for your safety and convenience.
A 5-ampere fuse is fitted in this plug.
Should the fuse need to be replaced please ensure that the replacement fuse has a rating of 5-ampere and that it is approved by ASTA or BSI to BS1362.
Check for the ASTA mark ⟐ or the BSI mark ⚤ on the body of the fuse.

If the plug contains a removable fuse cover you must ensure that it is refitted when the fuse is replaced.
If you lose the fuse cover the plug must not be used until a replacement cover is obtained.
A replacement fuse cover can be purchased from your local dealer.

CAUTION!
IF THE FITTED MOULDED PLUG IS UNSUITABLE FOR THE SOCKET OUTLET IN YOUR HOME THEN THE FUSE SHOULD BE REMOVED AND THE PLUG CUT OFF AND DISPOSED OF SAFELY.
THERE IS A DANGER OF SEVERE ELECTRICAL SHOCK IF THE CUT OFF PLUG IS INSERTED INTO ANY 13-AMPERE SOCKET.

If a new plug is to be fitted please observe the wiring code as shown below.
If in any doubt please consult a qualified electrician.

IMPORTANT

The wires in this mains lead are coloured in accordance with the following code:
Blue: Neutral, Brown: Live.
As these colours may not correspond with the coloured markings identifying the terminals in your plug, proceed as follows:
The wire which is coloured Blue must be connected to the terminal which is marked with the letter N or coloured Black or Blue.
The wire which is coloured Brown must be connected to the terminal which is marked with the letter L or coloured Brown or Red.

www.manualscenter.com

WARNING: DO NOT CONNECT EITHER WIRE TO THE EARTH TERMINAL WHICH IS MARKED WITH THE LETTER E, BY THE EARTH SYMBOL ⏚ OR COLOURED GREEN OR GREEN/YELLOW.

THIS PLUG IS NOT WATERPROOF—KEEP DRY.

Before use

Remove the connector cover.

How to replace the fuse

The location of the fuse differ according to the type of AC mains plug (figures A and B). Confirm the AC mains plug fitted and follow the instructions below.
Illustrations may differ from actual AC mains plug.

1. Open the fuse cover with a screwdriver.

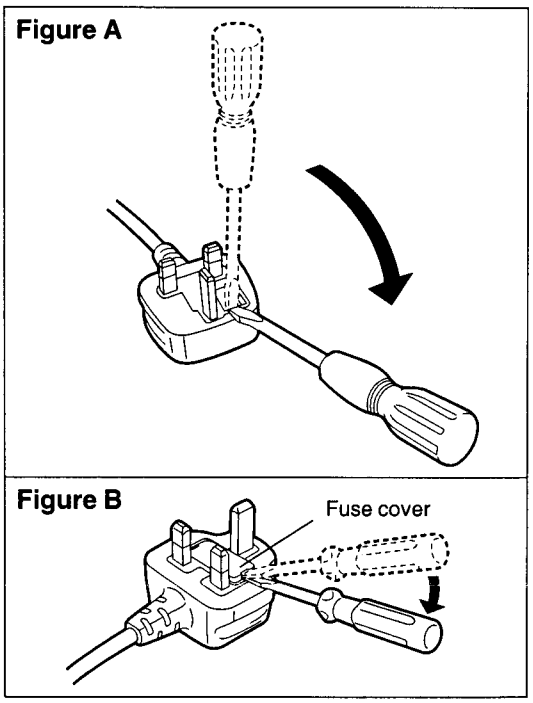

2. Replace the fuse and close or attach the fuse cover.

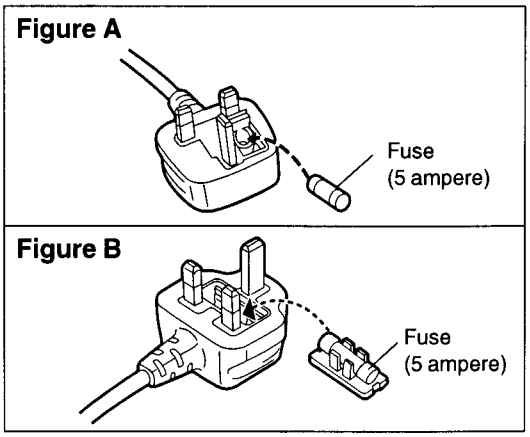

■ Front Panel Controls

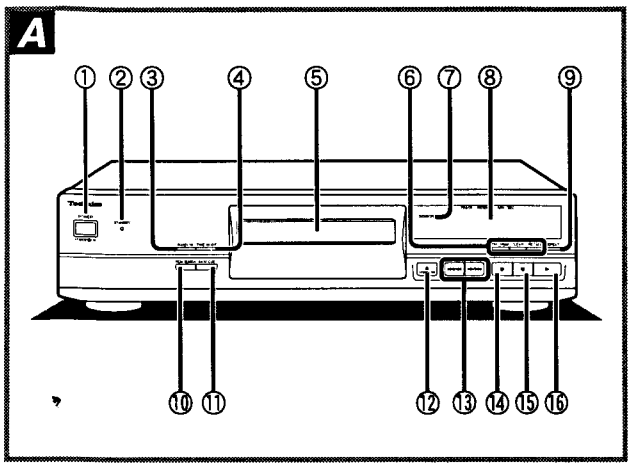

Main unit A

① **Power "STANDBY ⏻/ON" switch (POWER, STANDBY ⏻/ON)**
Press to switch the unit from on to standby mode or vice versa. In standby mode, the unit is still consuming a small amount of power.

② **Standby indicator (STANDBY)**
When the unit is connected to the AC mains supply, this indicator lights up in standby mode and goes out when the unit is turned on.

③ **Random play button (RANDOM)**
④ **Time mode select button (TIME MODE)**
⑤ **Disc tray**
⑥ **Program play buttons**
- **Program button (PROGRAM)**
- **Clear button (CLEAR)**
- **Recall button (RECALL)**

⑦ **Remote control signal sensor (SENSOR)**
⑧ **Display panel**
⑨ **Repeat button (REPEAT)**
⑩ **Peak search button (PEAK SEARCH)**
⑪ **Auto cue button (AUTO CUE)**
⑫ **Disc tray open/close button (⏏ OPEN/CLOSE)**
⑬ **Skip/search buttons (⏮/◀◀,▶▶/⏭)**
⑭ **Stop button (■)**
⑮ **Pause button (❚❚)**
⑯ **Play button (▶)**

■ Sequential Play

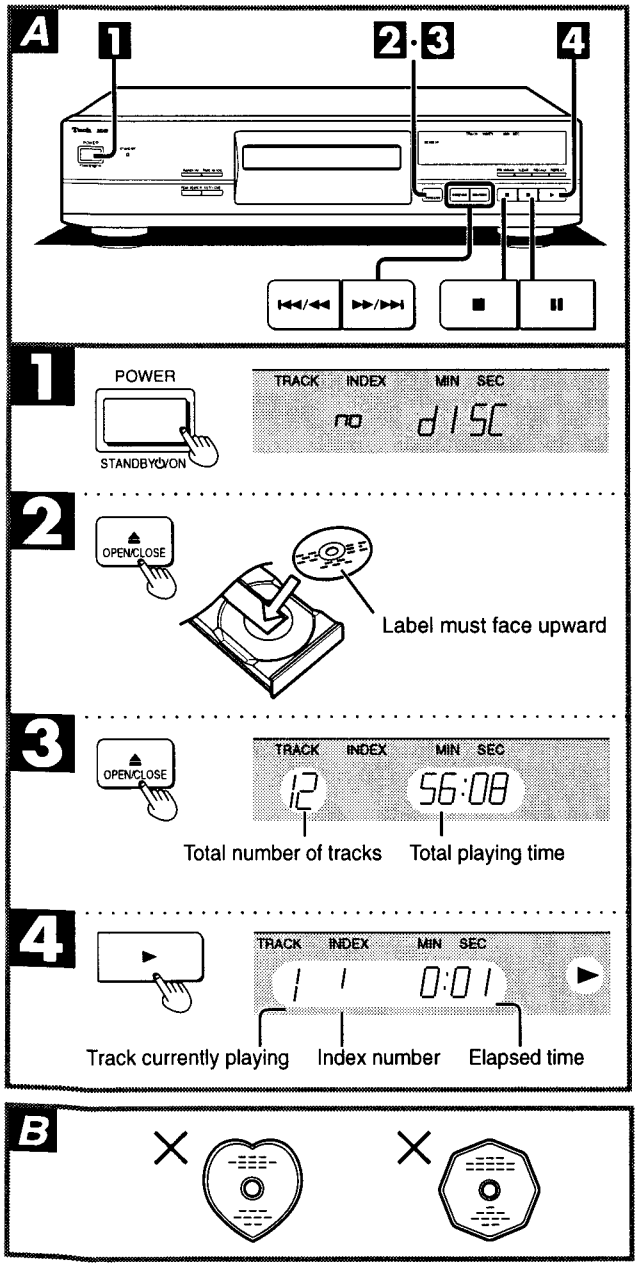

1 Press POWER (Power goes on).

- " no dISC " indicates that a CD has not been inserted.
- If a CD is already in the disc tray, it automatically begins playing from the first track.

2 Press ⏏ OPEN/CLOSE to open the tray and insert a disc.

3 Press ⏏ OPEN/CLOSE to close the tray.

4 Press ▶ (Play begins).
Play stops automatically after all tracks have been played.

To stop the disc play
Press ■.

To pause	Press ❚❚ during playback. To resume playback, press ▶.
To search forward/ backward (SEARCH)	Hold down ⏮/◀◀ (backward) or ▶▶/⏭ (forward) during playback.
To skip forward/backward (SKIP)	Press ⏮/◀◀ (backward) or ▶▶/⏭ (forward) during playback.

For your reference
- If you skip step 3 and press ▶, the tray automatically closes and play begins from the first track.

Notes
- Do not use irregular shape CDs (heart-shape, octagonal, etc.). B
- **During random play :**
  You cannot skip backward to previous tracks.
  You can search only in the current track.
- **During program play :**
  Forward and backward skipping is performed in the programmed track order.
  You can search only in the current track.
- **During A-B repeat :**
  Searching can be performed beyond the A-B segment. (A-B repeat will not be cancelled.)

www.manualscenter.com

■ Self-Diagnostic Function

The Self-Diagnostic feature automatically diagnoses the deck's mechanism and provides error information display. It includes self-diagnosis functions for the servo system and the mechanism control switches.

1. Servo System Self-Diagnosis

With the test disc (SZZP1054C) loaded, turn the deck off.

↓

While pressing and holding the [■], [II] and [►] keys, turn the deck on again *(Self-Diagnostic mode is entered).

↓

The display will show an error code, if any (see Table 1).

↓

Press [►] to play the test disc.

↓

The display shows servo system status (see Fig. 2 and Table 2).

* To exit Self-Diagnostic mode, turn the deck off.

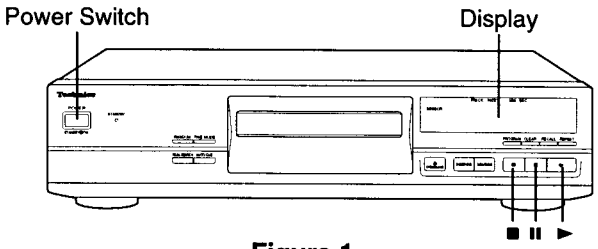

Figure 1

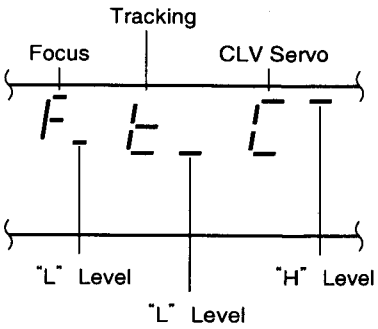

Figure 2

	"L" level	"H" level
Focus	Focus system normal	Focus system error
Tracking	Tracking system normal	Tracking system error
CLV Servo	CLV servo system normal	CLV servo system error

Table 2

Error code	Symptom	Probable cause	Signal to check		Normal voltage and waveform values	
			Location	Signal Name	PLAY	STOP
E-00	Normal	———	—	—	—	—
E-01	Focus tracking offset adjustment has not been completed within the specified time.	1. IC702's clock input X1, IC702's power supply (VDD) or its reset (/RST) is invalid. 2. Any signals MDATA, MCLK, MLD, or SENSE to/from IC401 are invalid.	IC702 8 pin	MDATA	PLAY 5 V 0 V T=13.6 ms.	0V
			IC702 7 pin	MCLK	PLAY 5 V 0 V T=13.6 ms.	4.8V
			IC702 9 pin	MLD		4.9V
			IC702 10 pin	SENSE	0V	0V
			IC702 18 pin	/RST	4.9V	4.9V
			IC702 58 pin	X1	1.9Vp-p F=16.9344 MHz	1.9Vp-p F=16.9344 MHz
			IC702 59 pin	X2	5.6Vp-p F=16.9344 MHz	5.6Vp-p F=16.9344 MHz
E-02 E-03 E-05 E-06 E-07 E-09 E-0A E-0B E-0D E-0E E-0F	The test disc does not play consistently.	1. The disc is scratched or dirty. 2. Focus or tracking servo is malfunctioning (check waveforms, voltages and circuit constants). 3. Spindle driver is malfunctioning. 4. Optical pickup is malfunctioning.	IC702 32 pin	FE	PLAY 0.3Vp-p 2 ms. 0.1 V/DIV.	2.5V
			IC702 33 pin	TE	PLAY 400 mVp-p 2 ms. 0.2 V/DIV.	2.5V
			IC702 28 pin	FOD	2.5V	2.5V
			IC702 27 pin	TRD	2.5V	2.5V
			IC702 26 pin	KICK	2.5V	2.5V
			IC702 11 pin	/FLOCK	0V	4.9V
			IC702 38 pin	/RF DET	0V	4.9V
			TJ701	RF	PLAY 1.2 Vp-p 0.5 μs. 0.2 V/DIN	2.4V
			IC702 17 pin	STAT	4.9V	0V
E-04 E-08 E-0C	Focus or tracking gain adjustment has not completed in the specified time.	1. The disc is scratched or dirty. 2. Focus or tracking servo is malfunctioning (check waveforms, voltages and circuit constants). 3. Optical pickup is malfunctioning.	IC702 32 pin	FE	PLAY 0.3Vp-p 2 ms. 0.1 V/DIV.	2.5V
			IC702 33 pin	TE	PLAY 400 mVp-p 2 ms. 0.2 V/DIV.	2.5V
			IC702 36 pin	OFT	0V	0V
			IC702 12 pin	/TLOCK	0V	0V

Table 1

www.manualscenter.com

2. Mechanism Control Switches Self-Diagnosis

Turn the deck on.

↓

Open the disc tray (⏏).

↓

Place the test disc (SZZP1054C) on the tray.

↓

Close the disc tray (⏏).

↓

Press and hold the (■) key.

↓

While holding down the (■) key for more than 2 sec., press and hold the (▶▶/▶▶I) key (the deck enters Self-Diagnostic mode).

↓

Press the (■) key.
The display will show an error code, if any. For details of the error codes, see Table 3.

↓

If more than one error exists, the display will sequentially show the respective error codes each time the (■) key is pressed.

* To exit Self-Diagnostic mode, turn the deck off.

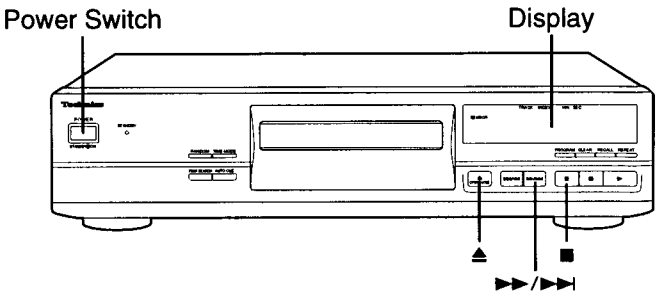

Figure 3

Error Code	Symptom	Possible Cause
F15	Interval before CD starts playing is too long.	Pickup home position sense switch is defective.
H15	Disc tray closes immediately after it is opened.	Open disc tray sense switch (S781) is defective.
H16	Disc tray opens immediately after it is closed.	Closed disc tray sense switch (S782) is defective.
F26	The display shows error code "F26" after the deck is turned on. The CD does not play.	Communication error between CD servo IC and CPU.

Note: Error code "F26" will be displayed before Self-Diagnostic mode is entered if an error exists.

Table 3

www.manualscenter.com

Operation Checks and Main Component Replacement Procedures

Warning: This product uses a laser diode. Refer to caution statements on page 2.
ACHTUNG: • Die lasereinheit nicht zerlegen.
• Die lasereinheit dart nur gegen eine vom hersteller speziferte einheit ausgetauscht werden.
"ATTENTION SERVICER" Some chassis components may have sharp edges. Be careful when disassembling and servicing.

NOTE

1. **This section describes procedures for checking the operation of the major printed circuit boards and replacing the main components.**
2. **For reassembly after operation checks or replacement, reverse the respective procedures. Special reassembly procedures are described only when required.**
3. **Select items from the following index when checks or replacement are required.**
4. **Refer the parts No. on the page of "Main Component Replacement Procedures", if necessary.**

• Contents

■ Checking Procedures for each P.C.B.

Page.
1. Checking for the operation P.C.B. and main P.C.B.. ····· 8,9.
2. Checking for the CD servo P.C.B.. ····· 9.

■ Main Component Replacement Procedures

1. Replacement for the traverse unit ass'y. ····· 10~12.
2. Replacement for the loading belt and loading motor. ····· 12.

■ Checking Procedures for each P.C.B.

1. Checking for the operation P.C.B. and main P.C.B.

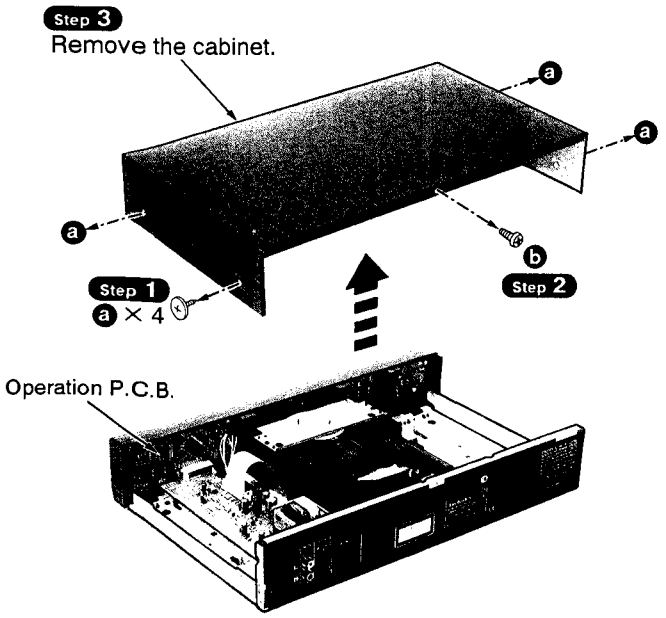

• **Check the operation P.C.B. in this condition.**

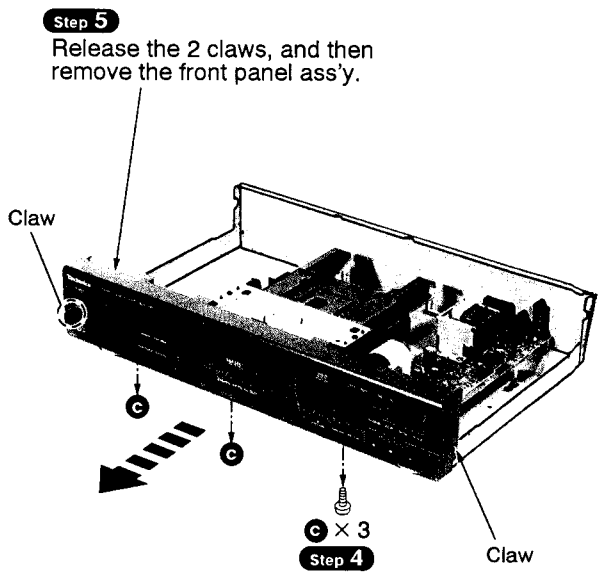

www.manualscenter.com

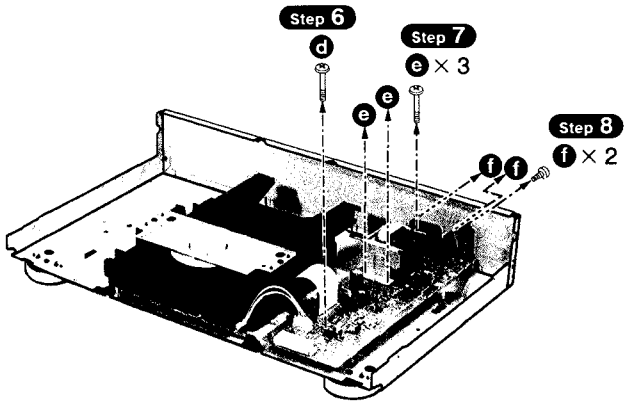

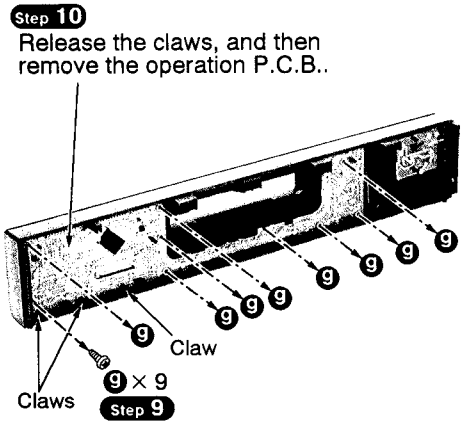

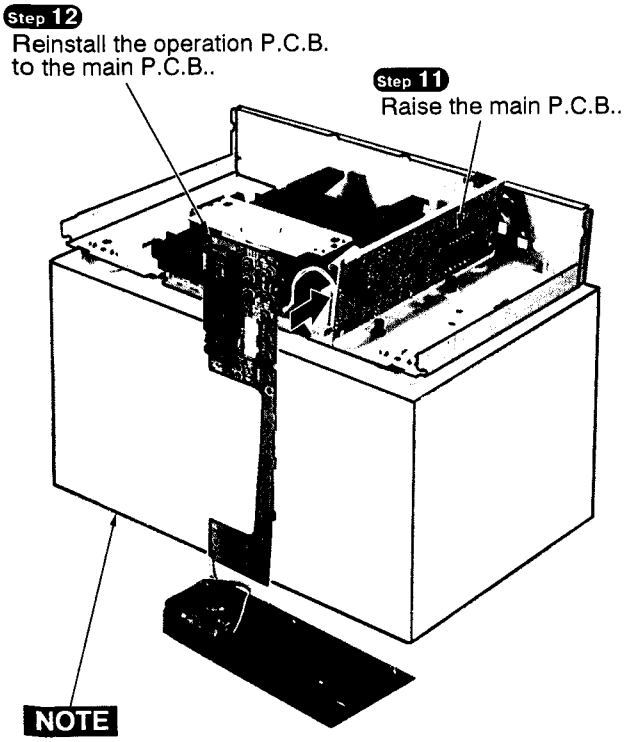

NOTE
In order to stand the operation P.C.B., place a box under the unit.

- **Check the main P.C.B. as shown below.**

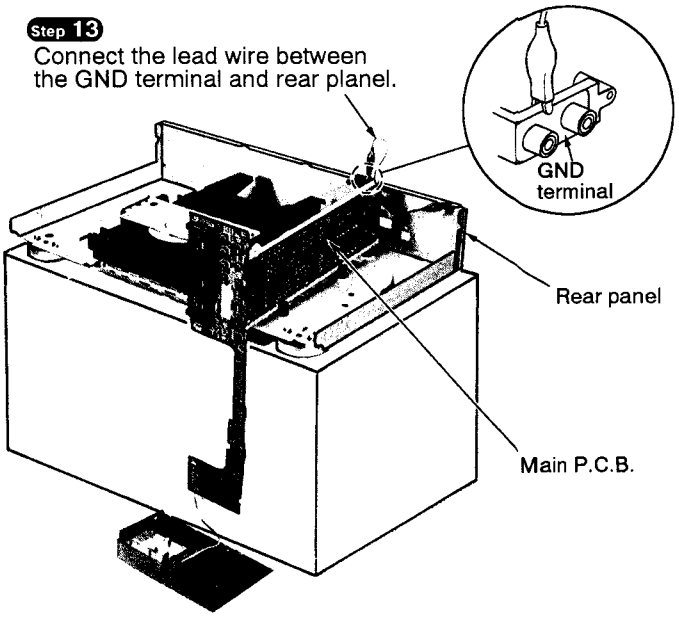

2. Checking for the CD servo P.C.B.

- Follow the Step 1 ~ Step 5 of the item 1 in checking procedure for each P.C.B. on page 8.

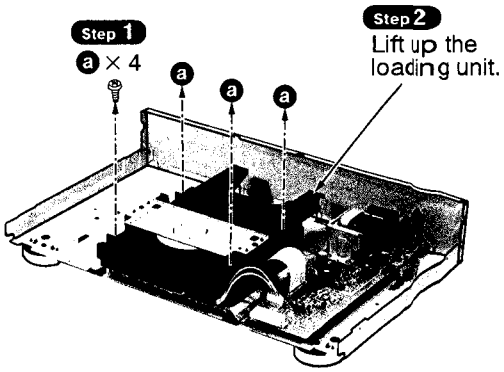

- **Check the CD servo P.C.B. as shown below.**

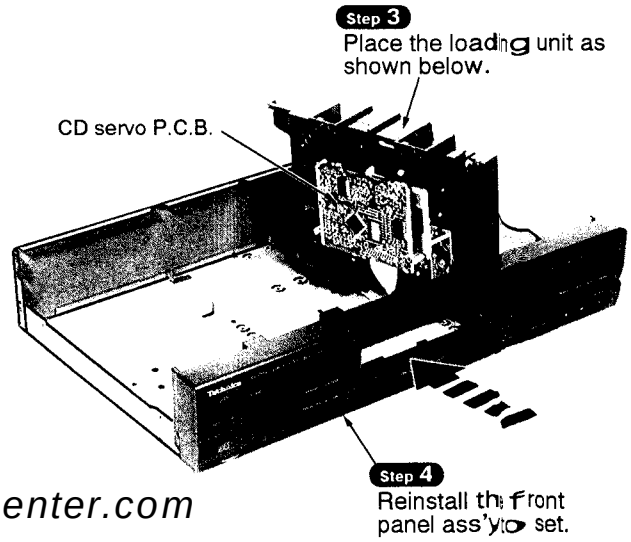

www.manualscenter.com

■ Main Component Replacement Procedures

1. Replacement for the traverse unit ass'y

- Follow the Step 1 ~ Step 5 of the item 1 in checking procedure for each P.C.B. on page 8.

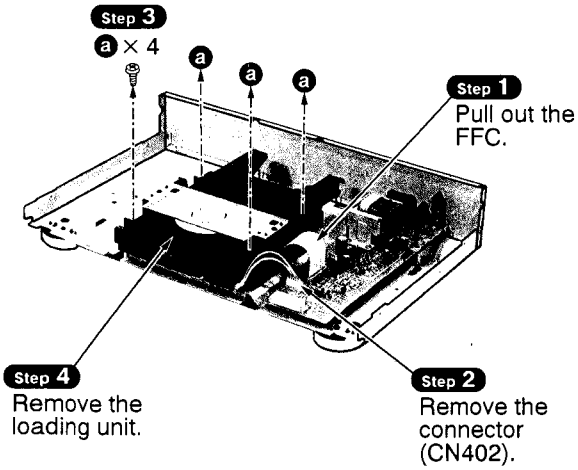

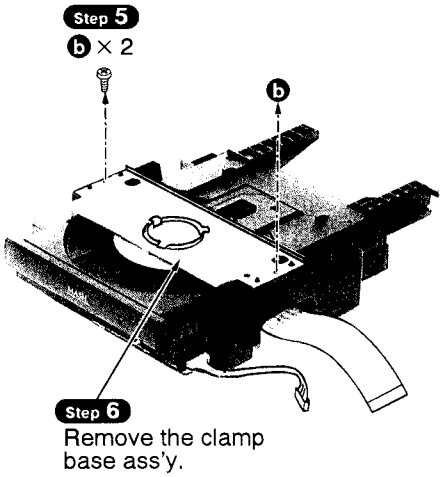

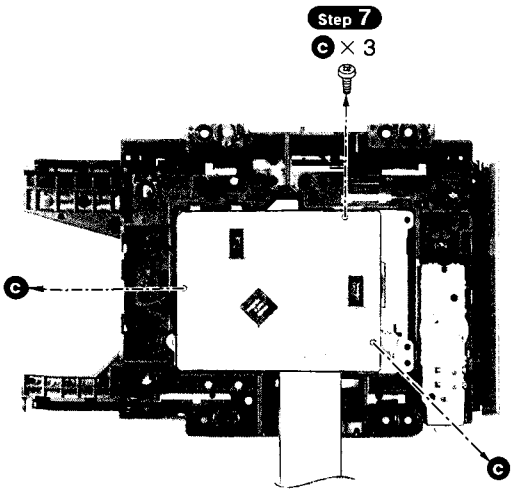

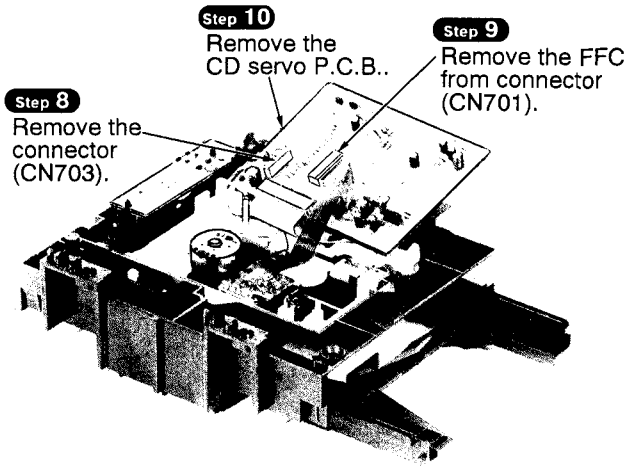

■ Removal of the FFC

- Push the top of the connector in the direction of arrow ①, and then pull out the FFC in the direction of arrow ②.

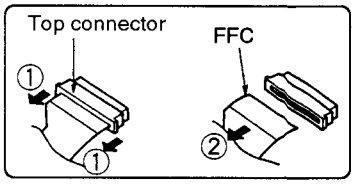

NOTE

Insert a shorting pin into the traverse unit FFC.
(Refer to Handing Precautions for Traverse Deck on page 2.)

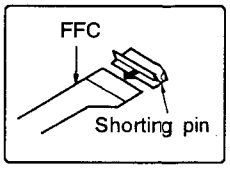

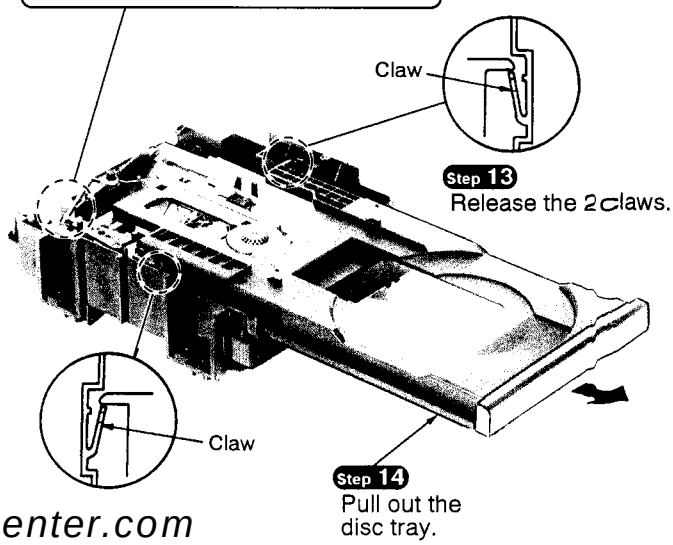

www.manualscenter.com

Step 15
Remove the spring.

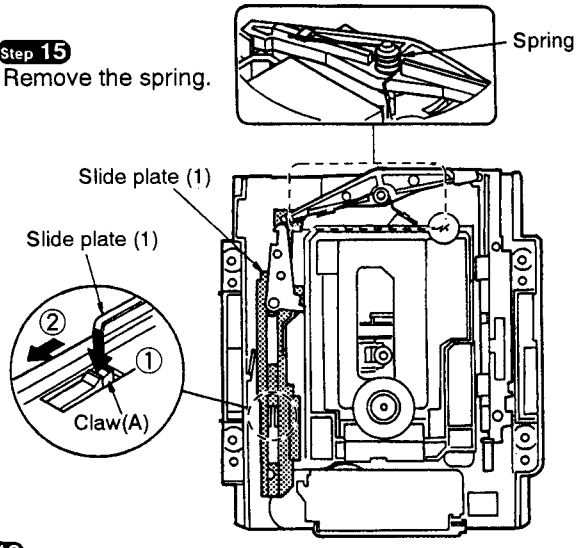

Step 16
Push the claw (A) in the direction of arrow ①, and then move the slide plate (1) in the direction of arrow ②.

NOTE
Be careful not to damage the claw (A) because the claw (A) is breakable.

Step 19
ⓓ

Step 17
Remove the change lever.

Step 21
ⓔ

Step 20
Remove the stopper.

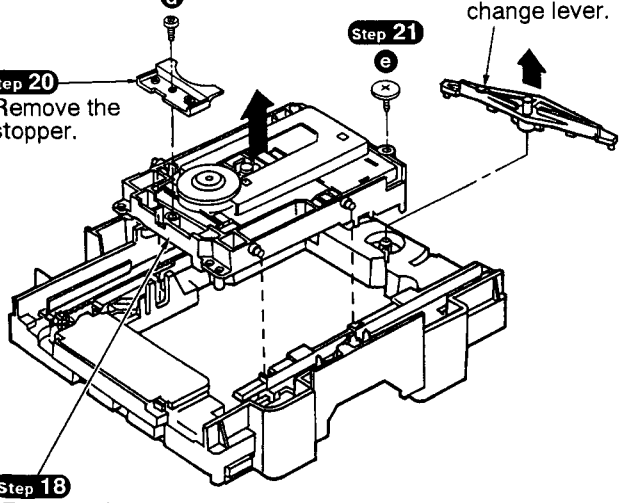

Step 18
Remove the traverse unit ass'y.

Step 23
Remove the damping rubber from traverse chassis.

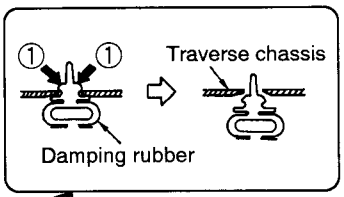

Step 22
Remove the lead wire from clamper.

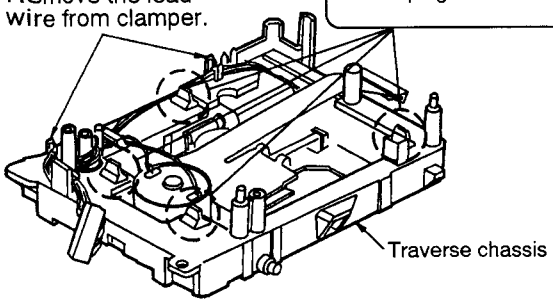

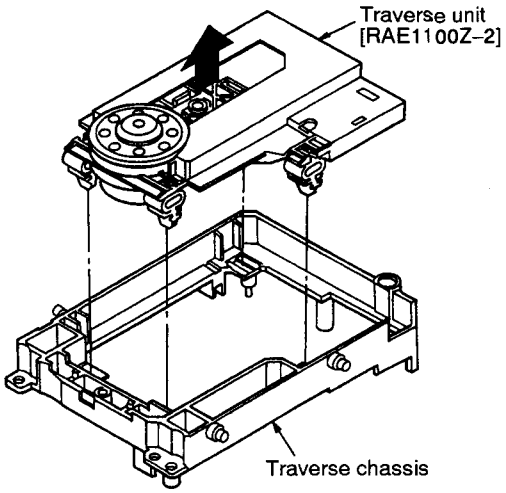

Installation of the disc tray after replacement

Step 1
Slide the drive rack fully in the direction of arrow.

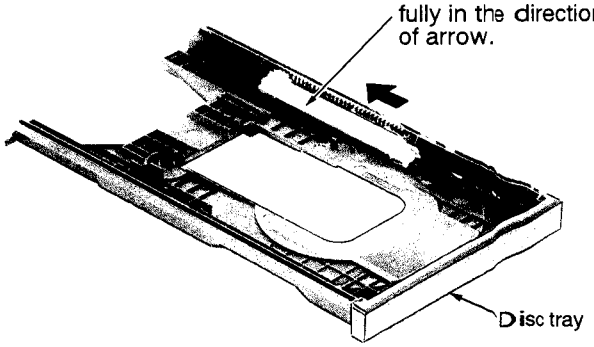

Step 2
Slide the change lever, and then leave the traverse unit ass'y falling.

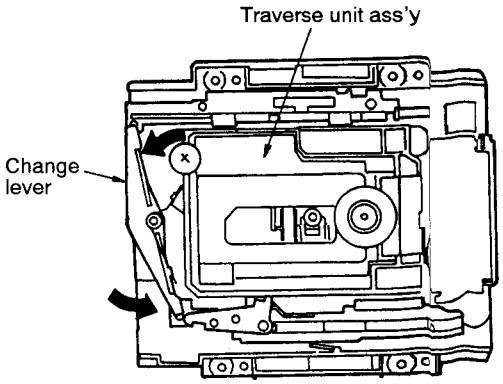

www.manualscenter.com

Step 3
Align the disc tray groove with the mechanism chassis rib.

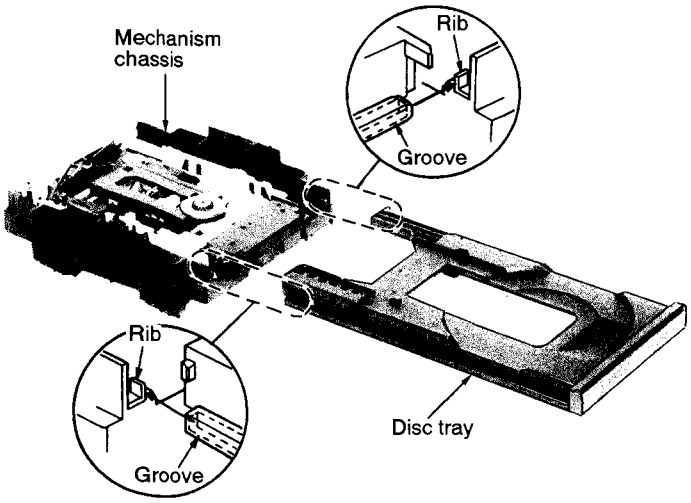

Step 4
Slide the disc tray in the direction of arrow. Then, put the drive rack manually so that the drive gear (1) engages with the drive rack gear.

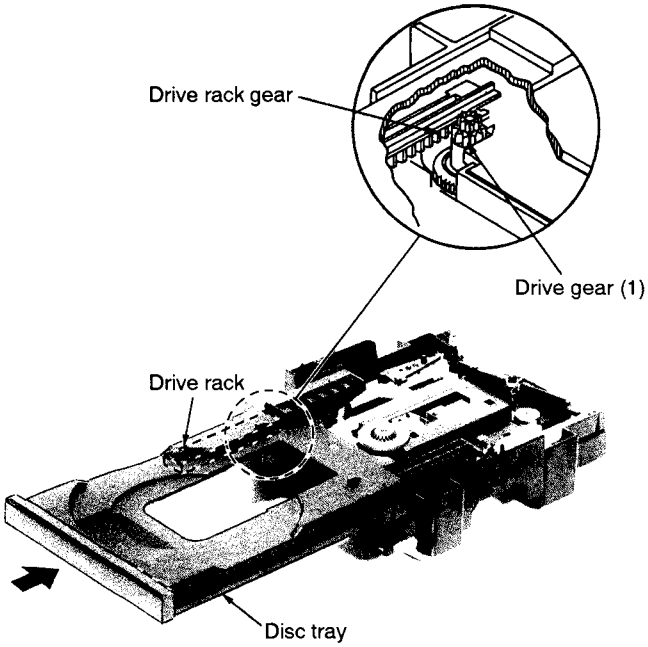

Step 5
After the drive gear (1) engaged with the drive rack gear, slide the disc tray.

www.manualscenter.com

2. Replacement for the loading belt and loading motor

- Follow the Step 1 ~ Step 5 of the item 1 in checking procedure for each P.C.B. on page 8.
- Follow the Step 1 ~ Step 14 of the item 1 in main component procedures on page 10.

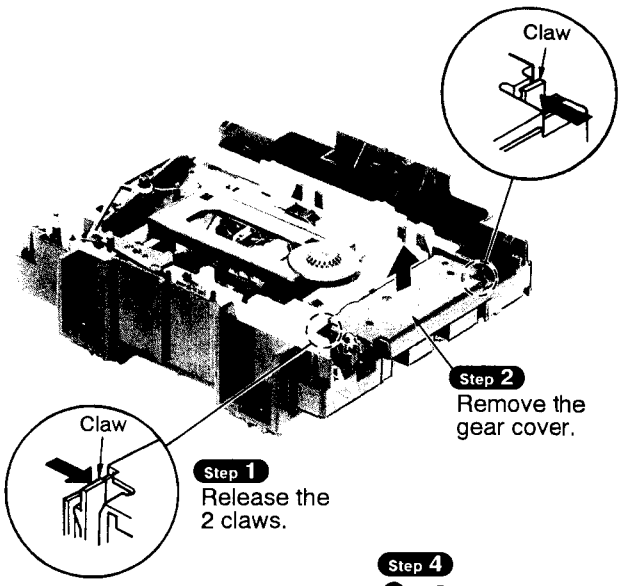

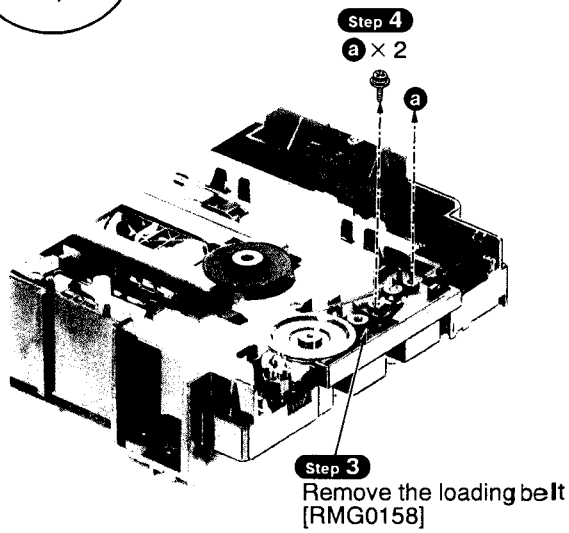

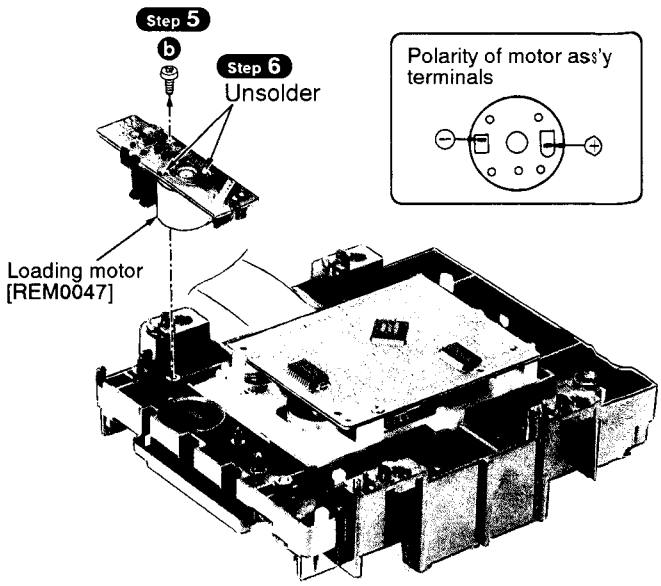

■Schematic Diagram

		Page
A	CD SERVO CIRCUIT	14, 15
B	POWER SWITCH CIRCUIT	16
C	OPERATION CIRCUIT	16
D	LOADING MOTOR CIRCUIT	17
E	MAIN CIRCUIT	16, 17

- This schematic diagram may be modified at any time with the development of new technology.

Notes:

- **S601** : Time mode select switch (TIME MODE)
- **S602** : Auto cue switch (AUTO CUE)
- **S604** : Peak level search switch (PEAK SEARCH)
- **S605** : Random play switch (RANDOM)
- **S621** : F. Skip switch (▶▶/▶▶I)
- **S622** : Pause switch (❚❚)
- **S623** : Disc tray open/close switch (⏏ OPEN/CLOSE)
- **S624** : Program switch (PROGRAM)
- **S625** : Repeat switch (REPEAT)
- **S626** : Stop switch (■)
- **S627** : Play switch (▶)
- **S628** : R. Skip switch (I◀◀/◀◀)
- **S629** : Clear switch (CLEAR)
- **S630** : Recall switch (RECALL)
- **S651** : Power "**STANDBY ⏻ /ON**" switch (POWER)
- **S701** : Rest switch
- **S781** : Tray open detect switch
- **S782** : Tray close detect switch

- Indicated voltage values are the standard values for the unit measured by the DC electronic circuit tester (high-impedance) with the chassis taken as standard. Therefore, there may exist some errors in the voltage values, depending on the internal impedance of the DC circuit tester.

  No mark : CD STOP
  ( ) : CD PLAY [1 kHz, L + R, 0 dB]

- Important safety notice:
  Components identified by ⚠ mark have special characteristics important for safety.
  Furthermore, special parts which have purposes of fire-retardant (resistors), high-quality sound (capacitors), low-noise (resistors), etc. are used. When replacing any of components, be sure to use only manufacturer's specified parts shown in the parts list.

- **Caution!**
  IC and LSI are sensitive to static electricity.
  Secondary trouble can be prevented by taking care during repair.
  Cover the parts boxes made of plastics with aluminum foil.
  Ground the soldering iron.
  Put a conductive mat on the work table.
  Do not touch the legs of IC or LSI with the fingers directly.

www.manualscenter.com

- **Voltage and signal line**

  ▬▶▬ : Positive voltage line
  ▪▪▶▪▪ : Negative voltage line
  ⇨ : CD signal Line

A CD SERVO CIRCUIT (P.C.Board:on page 20)

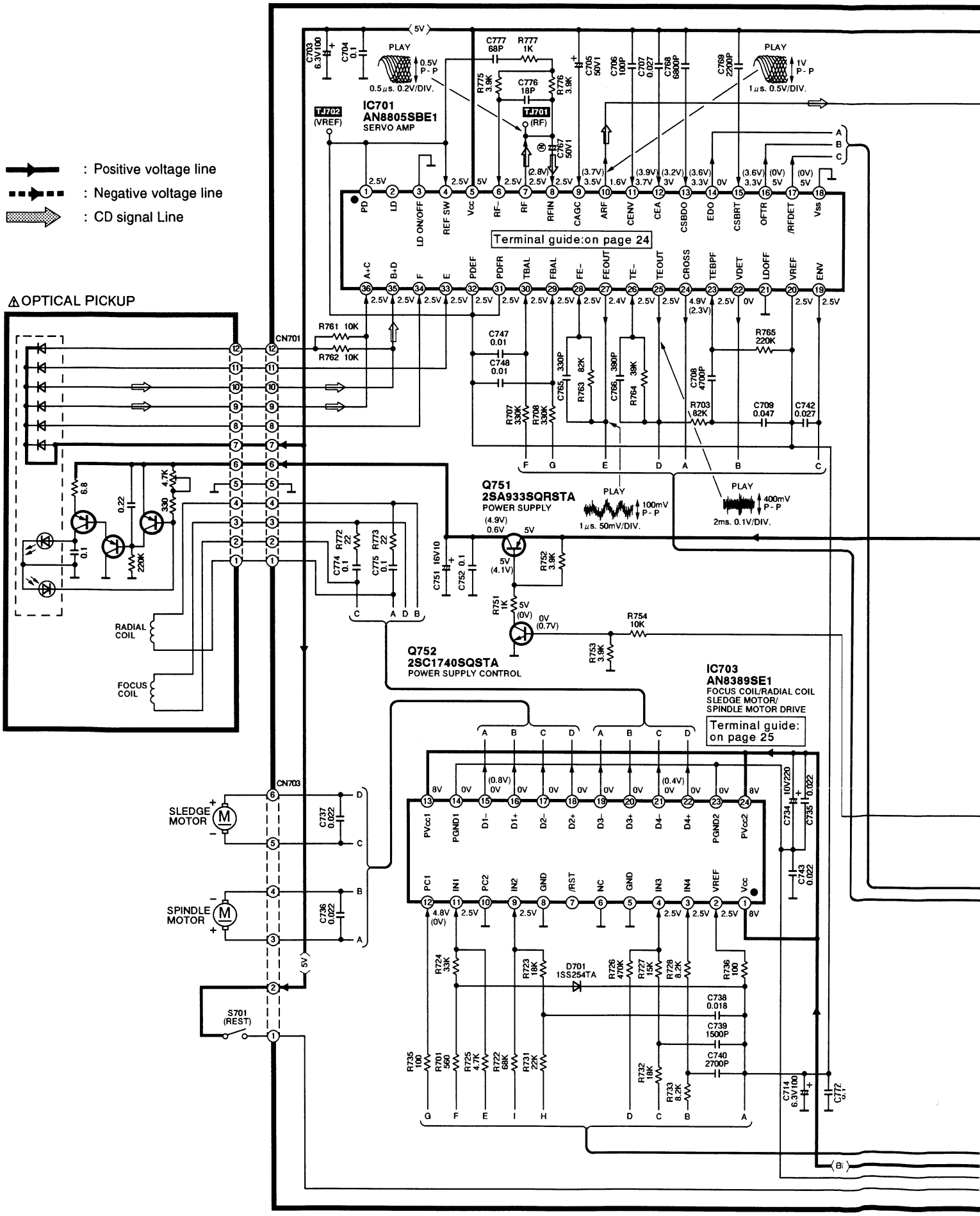

www.manualscenter.com

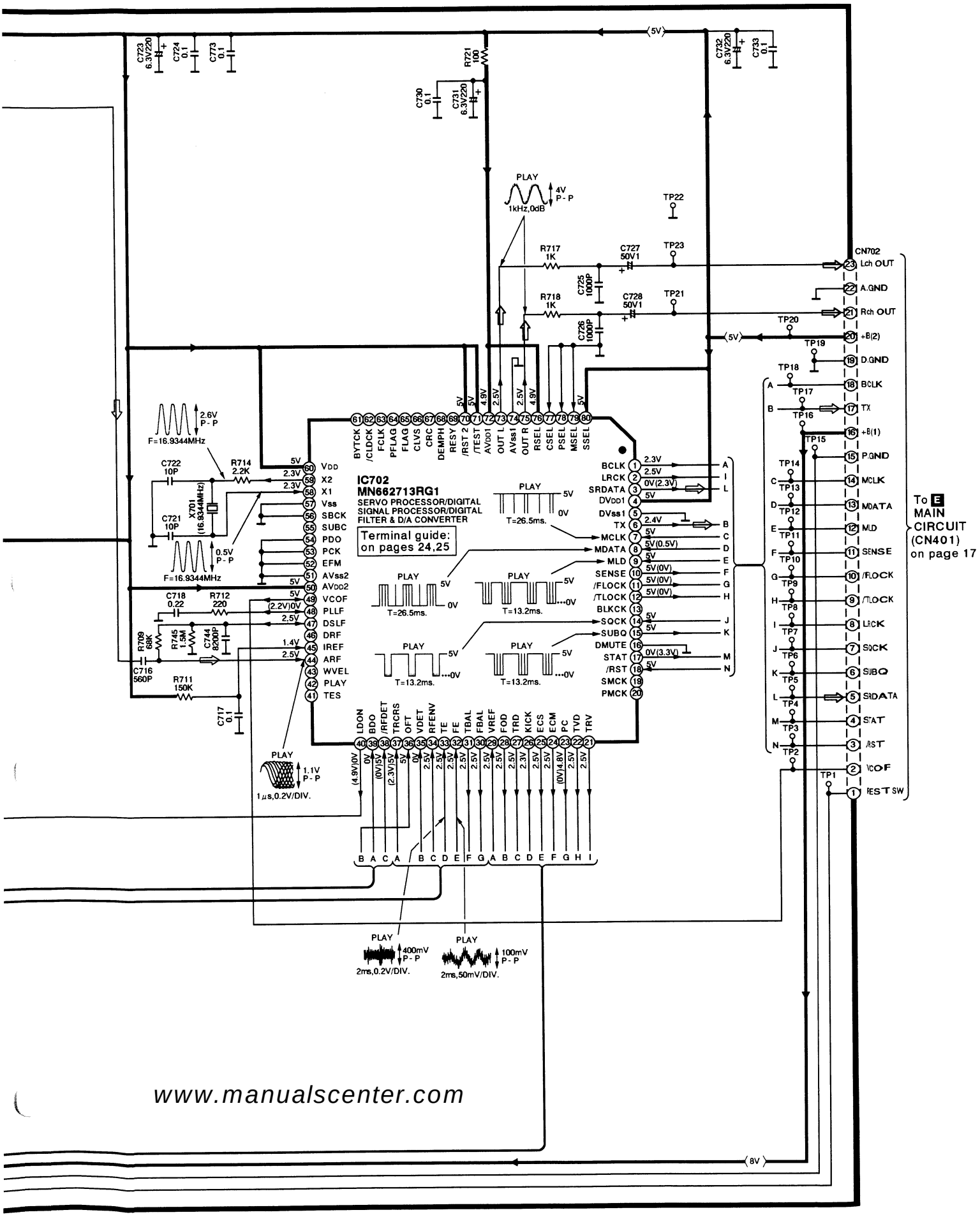

www.manualscenter.com

B POWER SWITCH CIRCUIT
(P.C.Board:on page 20)

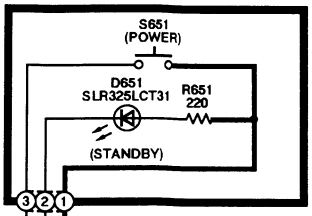

: Positive voltage line
: Negative voltage line
: CD signal Line

C OPERATION CIRCUIT (P.C.Board:on page 21)

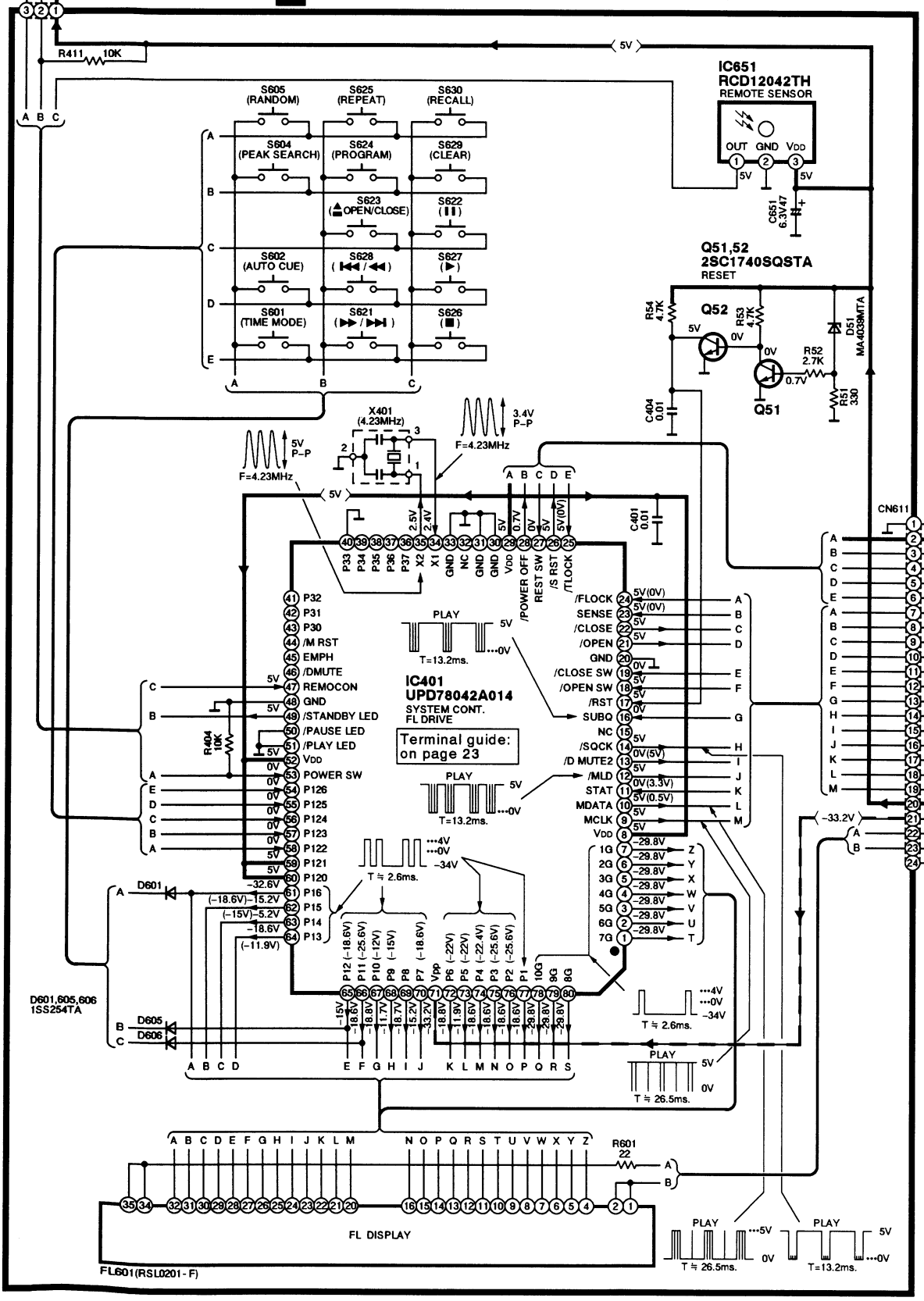

www.manualscenter.com

D LOADING MOTOR CIRCUIT
(P.C.Board:on page 20)

E MAIN CIRCUIT (P.C.Board:on page 21)

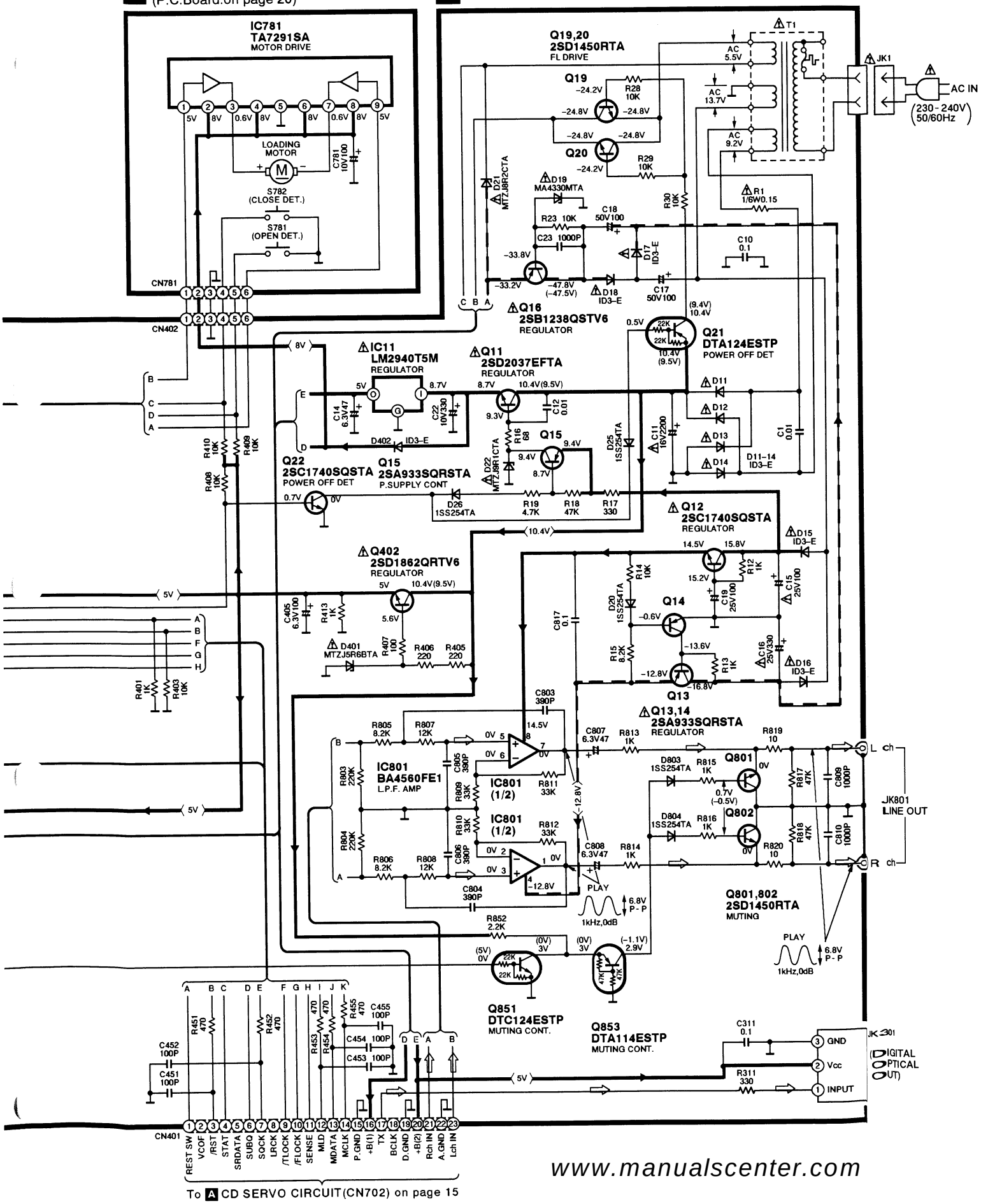

www.manualscenter.com

■ Block Diagram

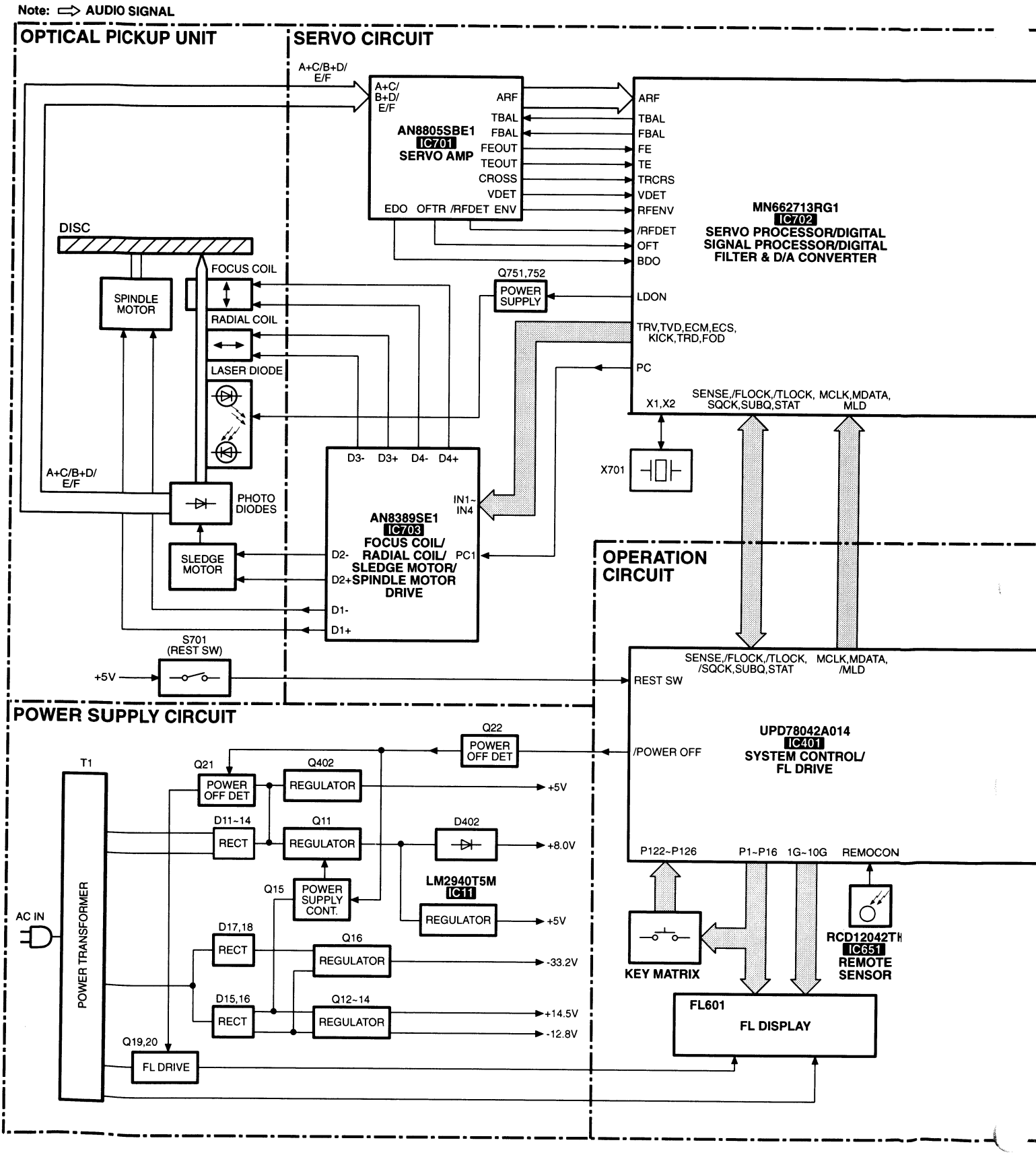

www.manualscenter.com

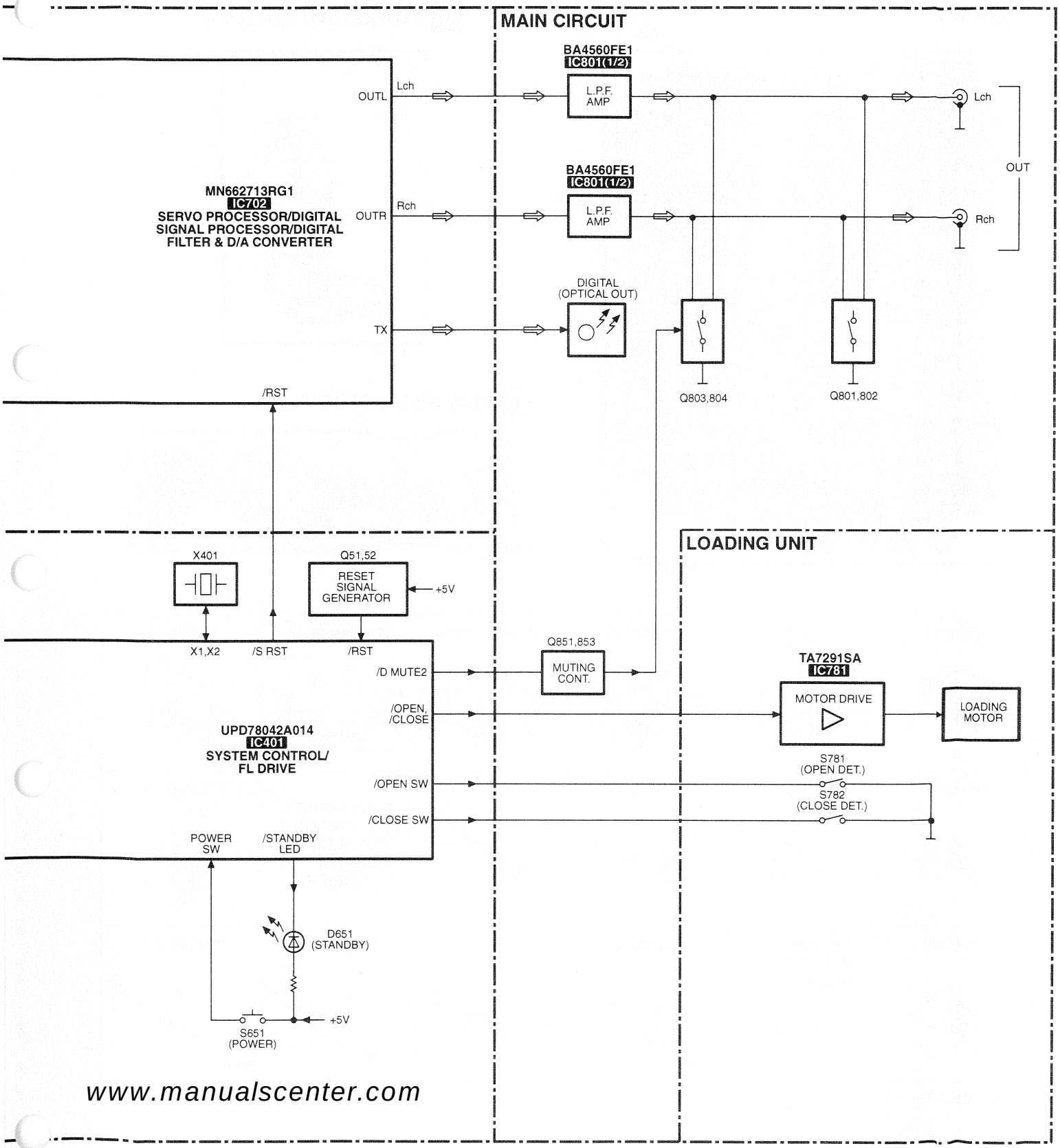

www.manualscenter.com

Printed Circuit Board Diagram

- This printed circuit board diagram may be modified at any time with the development of new technology.

A CD SERVO P.C.B.

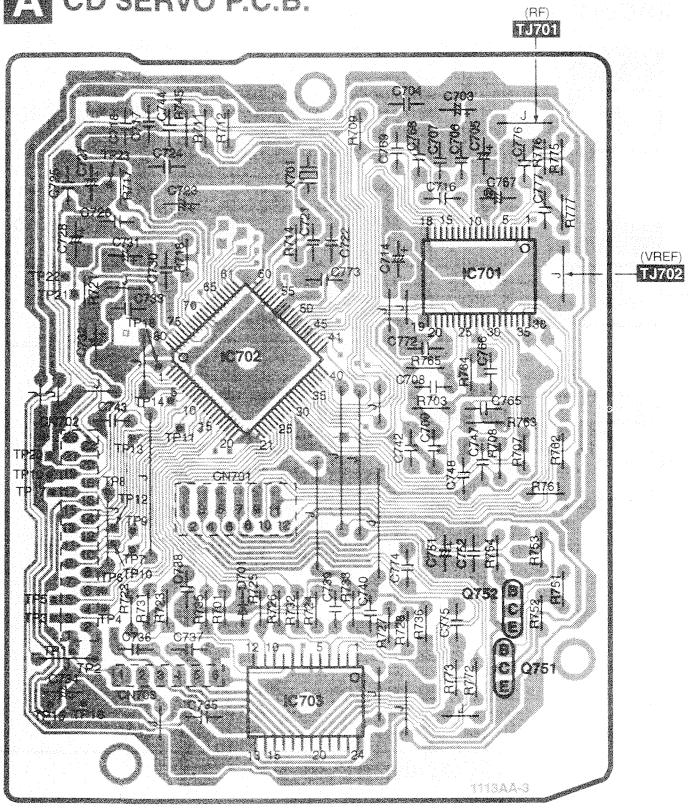

(REP1755B-N)

B POWER SWITCH P.C.B.

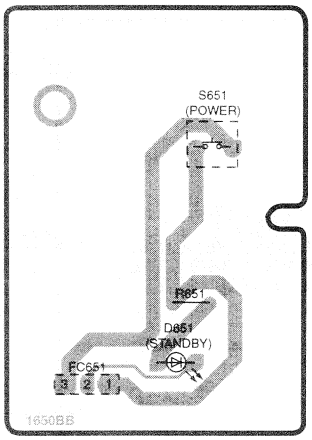

(REP2356A-S)

D LOADING MOTOR P.C.B.

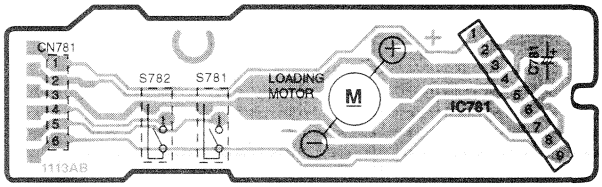

(REP1940A-N)

BA4560FE1 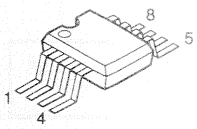	AN8389SE1 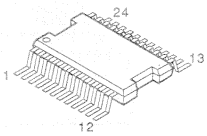	AN8805SBE1 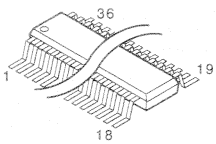	MN662713RG1 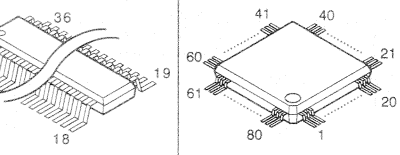	UPD78042A014	TA7291SA 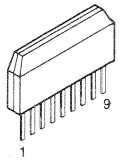
LM2940T5M 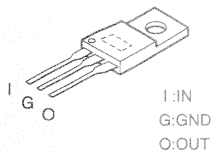 I:IN G:GND O:OUT	RCD12042TH 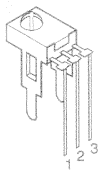	2SD2037EFTA 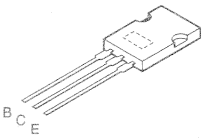	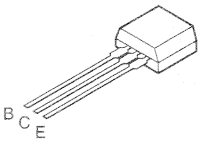	2SA933SQRSTA 2SC1740SQSTA DTA114ESTP DTA124ESTP DTC124ESTP	2SD1450RTA 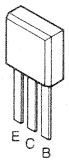
2SB1238QSTV6 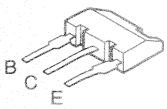	MTZJ5R6BTA MTZJ8R2CTA MTZJ9R1CTA 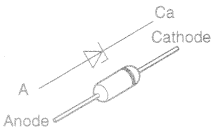	1SS254TA 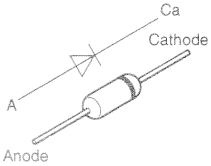	1D3-E 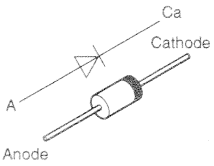	MA4330MTA 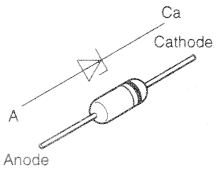	MA4039MTA 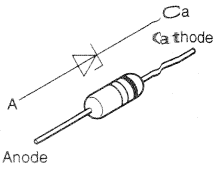
SLR325LCT31 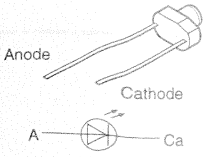					

www.manualscenter.com

C OPERATION P.C.B.

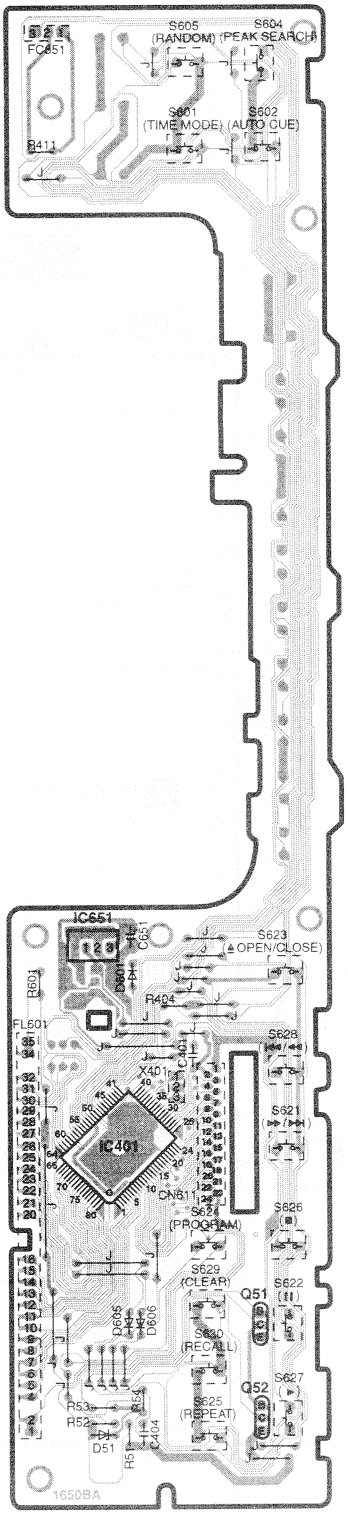

(REP2356A-S)

E MAIN P.C.B.

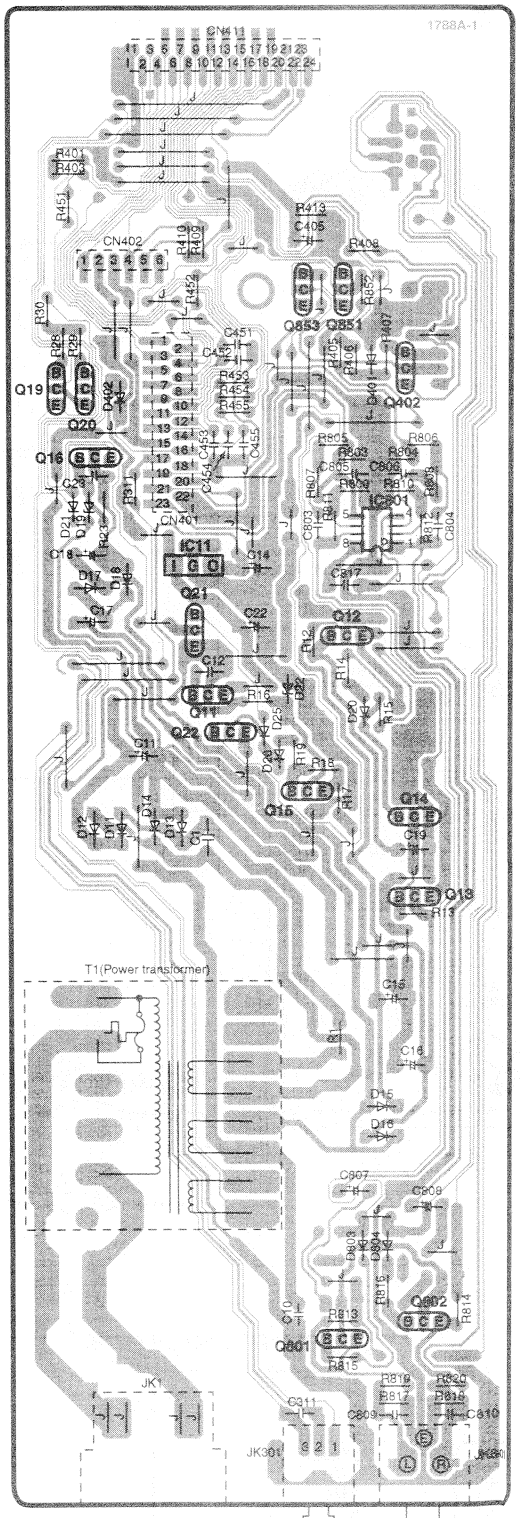

AC IN
(230-240V 50/60Hz)

DIGITAL
(OPTICAL
OUT)

LINE
OUT

(REP2388C-M...
-E,E B,EP]
REP2388F-M...
-EG)

www.manualscenter.com

■ Wiring Connection Diagram

NOTE:
BLK ····· Black
BLU ····· Blue
BRN ····· Brown
ORG ····· Orange
WHT ····· White
YEL ····· Yellow

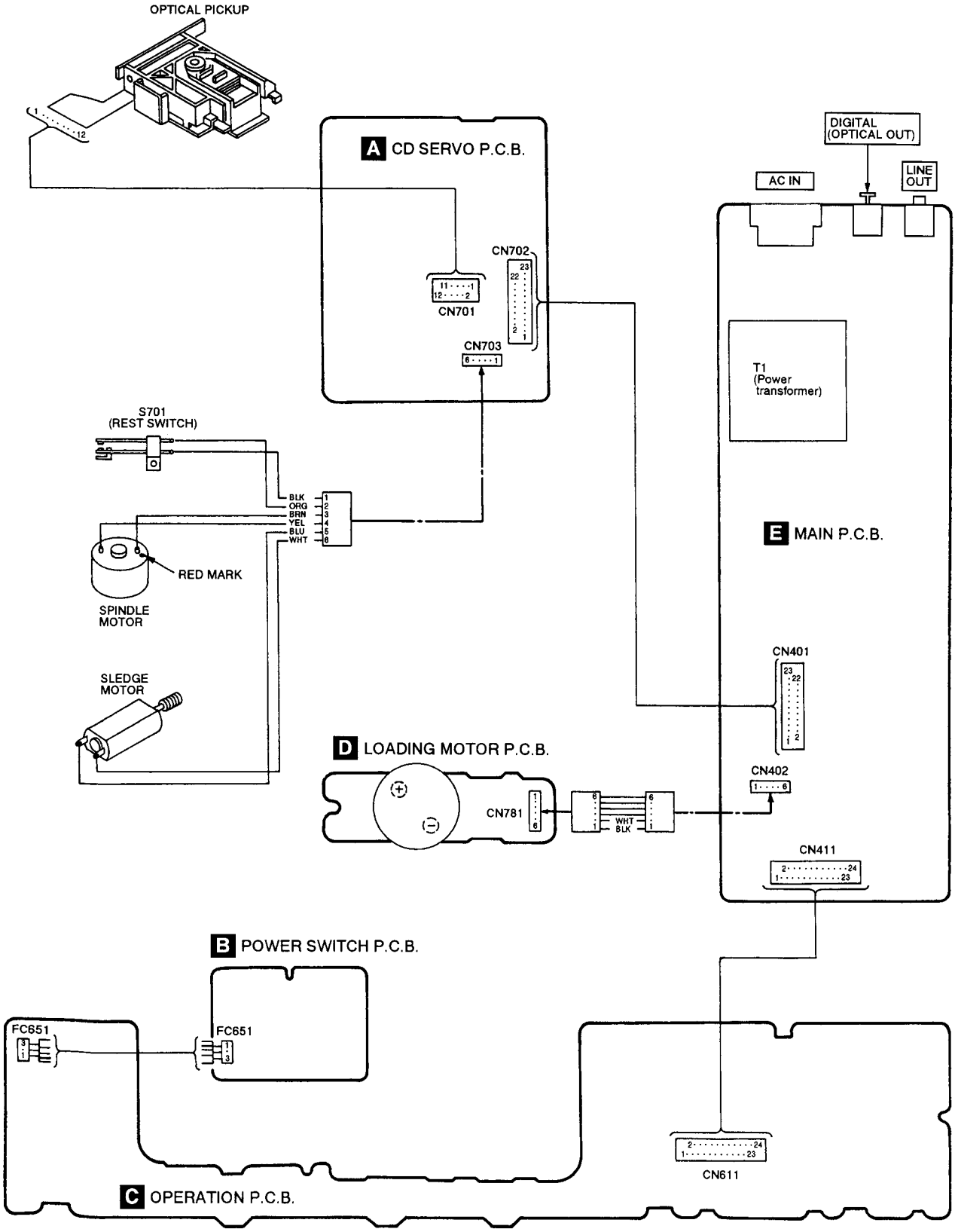

www.manualscenter.com

■ Terminal Function of IC's

• IC401 (UPD78042A014)

Pin No.	Terminal Name	I/O	Function
1 ~ 7	7G ~ 1G	O	FL grid drive signal output
8	VDD	—	Power supply (+ 5 V)
9	MCLK	O	Microprocessor command clock
10	MDATA	O	Microprocessor command data
11	STAT	I	Status signal input
12	/MLD	O	Microprocessor command load signal
13	/DMUTE2	O	Audio muting signal output
14	/SQCK	O	External clock for sub-code Q register
15	NC	—	No used, open
16	SUBQ	I	Sub-code Q input
17	/RST	I	Reset signal input
18	/OPEN SW	I	Disc tray "open" sense switch status
19	/CLOSE SW	I	Disc tray "close" sense switch status
20	GND	—	Connect to GND
21	/OPEN	O	Open Disc Tray command output
22	/CLOSE	O	Close Disc Tray command output
23	SENSE	I	Sense signal input
24	/FLOCK	I	Focus servo pull-in signal
25	/TLOCK	I	Tracking servo pull-in signal
26	/S RST	O	Reset signal output (IC702)
27	REST SW	I	Innermost track sense switch status
28	/POWEROFF	O	Power off command output
29	VDD	—	Power supply (+ 5 V)
30	GND	O	Connect to GND
31	GND	—	Connect to GND
32	NC	—	No used, open
33	GND	—	Connect to GND
34	X1	I	Main clock (4.23 MHz) input
35	X2	O	Main clock output
36 ~ 43	P37 ~ P30	I	No used, open
40	P33	I	No used, GND
44	/MRST	O	Reset signal output for MASH (No used, open)

Pin No.	Terminal Name	I/O	Function
45	EMPH	O	Emphasis signal output (No used, open)
46	/DMUTE	O	Muting signal output (No used, open)
47	REMOCON	I	Remote control signal input
48	GND	—	Connect to GND
49	/STANDBY LED	O	STANDBY LED control signal output
50	/PAUSE LED	O	PAUSE LED control signal output (No used, GND)
51	/PLAY LED	O	PLAY LED control signal output (No used, GND)
52	VDD	—	Power supply (+ 5 V)
53	POWER SW	I	Power key switch signal input
54 ~ 58	P126 ~ P122	I	Key return signal input
59, 60	P121, P120	—	No used, VDD
61 ~ 66	P16 ~ P11	O	FL anode drive signal and key scan signal output
67 ~ 70	P10 ~ P7	O	FL anode drive signal output
71	VPP	I	Power supply terminal for FL drive (– 32 V)
72 ~ 77	P6 ~ P1	O	FL anode drive signal output
78 ~ 80	10G ~ 8G	O	FL grid drive signal output

www.manualscenter.com

• IC701 (AN8805SBE1)

Pin No.	Terminal Name	I/O	Function
1	PD	I	APC amplifier input (No used, VREF connection)
2	LD	O	APC amplifier output (No used, open)
3	LD ON/OFF	I	APC ON/OFF control signal input (GND connection)
4	REFSW	I	Capacitor connection for CROSS
5	VCC	—	Power supply (+5V)
6	RF-	I	RF amplifier inversion signal input
7	RF	O	RF amplifier signal output
8	RFIN	I	AGC signal input
9	CAGC	I	AGC loop filter connection
10	ARF	O	AGC signal output
11	CENV	I	Capacitor connection for RF detection
12	CEA	I	Capacitor connection for HPF amplifier
13	CSBDO	I	Capacitor connection for-RF envelope detection
14	EDO	O	BDO signal output ("H" : Drop out)
15	CSBRT	I	Capacitor connection for RF envelope detection
16	OFTR	O	OFTR signal output
17	RFDET	O	RFDET signal output
18	Vss	—	GND
19	ENV	O	RF envelope signal output
20	VREF	O	VREF signal output
21	LD OFF	O	APC OFF signal control (No used, GND connection)
22	VDET	O	VDET signal output
23	TEBPF	I	VDET signal input
24	CROSS	O	CROSS signal output
25	TEOUT	O	TE amplifier signal output
26	TE-	I	TE amplifier inversion signal input
27	FEOUT	O	FE amplifier signal output
28	FE-	I	FE amplifier inversion signal input
29	FBAL	I	F BAL control signal
30	TBAL	I	T BAL control signal
31	PDFR	—	No used, VREF connection
32	PDEF	—	No used, VREF connection
33	E	I	I-V amplifier signal input
34	F	I	I-V amplifier signal input
35	B+D	I	I-V amplifier signal input
36	A+C	I	I-V amplifier signal input

• IC702 (MN662713RG1)

Pin No.	Terminal Name	I/O	Function
1	BCLK	O	Bit clock output for serial data output (2.8224 MHz)
2	LRCK	O	L/R identification signal output (44.1 kHz)
3	SRDATA	O	Serial data output
4	DVDD1	I	Power supply input (for digital circuit)
5	DVss1	—	GND (for digital circuit)
6	TX	O	Digital audio interface signal output
7	MCLK	I	Microprocessor command clock signal input (Latches data at first transition)
8	MDATA	I	Microprocessor command data signal input
9	MLD	I	Microprocessor command load signal input
10	SENSE	O	Sense signal output (OFT, FESL, MAGEND, NAJEND, POSAD, SFG)
11	/FLOCK	O	Focus servo feeding signal output ("L": Feed)
12	/TLOCK	O	Tracking servo feeding signal output ("L": Feed)
13	BLKCK	O	Sub-code block clock signal output (fBLKCK = 75 Hz during normal playback) (no used, open)
14	SQCK	I	External clock signal input for sub-code Q resister
15	SUBQ	O	Sub-code Q code output
16	DMUTE	I	Muting input (No used, GND connection)
17	STAT	O	Status signal output (CRC, CUE, CLVS, TTSTOP, FCLV, SQCK)
18	/RST	I	Reset input ("L" : reset, "H" : normally)
19	SMCK	—	1/2-divided clock signal of crystal oscillating at MSEL = "H" (fSMCK = 8.4672 MHz) 1/4-divided clock signal of crystal oscillating at MSEL = "L" (fSMCK = 4.2336 MHz) (no used, open)
20	PMCK	—	1/192-divided clock signal of crystal oscillating (fPMCK = 88.2 kHz) (no used, open)
21	TRV	O	Traverse forced feed output
22	TVD	O	Traverse drive output
23	PC	O	Spindle motor ON signal output ("L": ON)
24	ECM	O	Spindle motor drive signal output (forced mode output)
25	ECS	O	Spindle motor drive signal output (servo error signal output)
26	KICK	O	Kick pulse output
27	TRD	O	Tracking drive output
28	FOD	O	Focus drive output
29	VREF	I	D/A (drive) output (TVD, ECS, TRD, FOD, FBAL, TBAL) reference voltage input
30	FBAL	O	Focus balance adjustment output
31	TBAL	O	Tracking balance adjustment output
32	FE	I	Focus error signal input (analog input)
33	TE	I	Tracking error signal input (analog input)
34	RFENV	I	RF envelope signal input
35	VDET	I	Vibration detection signal input ("H": detection)
36	OFT	I	Off-track signal input ("H": off track)

www.manualscenter.com

IC702 Continued

Pin No.	Terminal Name	I/O	Function
37	TRCRS	I	Track cross signal input
38	/RFDET	I	RF detection signal input ("L": detection)
39	BDO	I	Dropout signal input ("H": Dropout)
40	LDON	O	Laser on signal output ("H": ON)
41	TES	O	Tracking error shunt signal output ("H": shunt) (No used, open)
42	PLAY	O	Play signal out ("H": PLAY) (no used, open)
43	WVEL	O	Double speed status signal output ("H": Double speed) (no used, open)
44	ARF	I	RF signal input
45	IREF	I	Reference current input
46	DRF	I	DSL bias (No used, open)
47	DSLF	I/O	DSL loop filter
48	PLLF	I/O	PLL loop filter
49	VCOF	I/O	VCO loop filter (No used, open)
50	AVDD2	I	Power supply input (for analog circuit)
51	AVss2	—	GND (for analog circuit)
52	EFM	O	EFM signal output (No used, open)
53	PCK	O	PLL extraction clock output (fPCK= 4.321 MHz during normal playback) (No used, GND connection)
54	PDO	O	Phase comparison signal of EFM and PCK signals (No used, GND connection)
55	SUBC	O	Sub-code serial data output (No used, open)
56	SBCK	I	Clock input for sub-code serial data
57	Vss	—	GND
58	X1	I	Crystal oscillating circuit input (f = 16.9344 MHz)
59	X2	O	Crystal oscillating circuit output (f = 16.9344 MHz)
60	VDD	I	Power supply input (for oscillating circuit)
61	BYTCK	—	Byte clock output (No used, open)
62	/CLDCK	O	Sub-code frame clock signal output (fCLDCK = 7.35 kHz during normal playback)
63	FCLK	—	Crystal frame clock signal output (fFCLK = 7.35 kHz, double = 14.7 kHz)
64	IPFLAG	O	Interpolation flag output ("H": Interpolation) (No used, open)
65	FLAG	O	Flag output (No used, open)
66	CLVS	O	Spindle servo phase synchronizing signal output ("H": CLV, "L": rough servo) (No used, open)
67	CRC	O	Sub-code CRC checked output ("H": OK, "L": NG) (no used, open)
68	DEMPH	O	De-emphasis ON signal output ("H": ON) (No used, open)
69	RESY	O	Frame resynchronizing signal output (No used, open)
70	/RST2	I	Reset input through MASH circuit ("L": Reset)
71	/TEST	I	Test input ("L" : Test, "H" : normally)
72	AVDD1	I	Power supply input (for analog circuit)
73	OUTL	O	Left channel audio signal output
74	AVss1	—	GND
75	OUTR	O	Right channel audio signal output
76	RSEL	I	RF signal polarity assignment input (at "H" level: RSEL = "H") (at "L" level: RSEL = "L")
77	CSEL	I	Crystal oscillating frequency designation input ("L": 16.9344 MHz, "H": 33.8688 MHz)
78	PSEL	I	Test input (normally, "L")
79	MSEL	I	Output frequency switching for SMCK terminal "H": SMCK = 8.4672 MHz "L": SMCK = 4.2336 MHz
80	SSEL	I	Output mode switching of SUBQ terminal ("H": Q code buffer mode)

• IC703 (AN8389SE1)

Pin No.	Terminal Name	I/O	Function
1	Vcc	I	Power supply
2	VREF	I	VREF input
3	IN4	I	Motor driver (4) input
4	IN3	I	Motor driver (3) input
5	GND	—	Ground connection
6	NC	—	Ground connection
7	/RST	I	Reset input (no used, open)
8	GND	—	Ground connection
9	IN2	I	Traverse motor driver (2) input
10	PC2	I	PC2 (power cut) input (No used, open)
11	IN1	I	Spindle motor driver input
12	PC1	I	Spindle motor ON signal output
13	PVcc1	I	Power supply (1) for driver
14	PGND1	—	Ground connection (1) for driver
15	D1-	O	Spindle motor driver (1) reverse-action output
16	D1+	O	Spindle motor driver (1) forward-action output
17	D2-	O	Traverse motor driver (2) reverse-action output
18	D2+	O	Traverse motor driver (2) forward-action output
19	D3-	O	Tracking actuator (3) reverse-action output
20	D3+	O	Tracking actuator (3) forward-action output
21	D4-	O	Focus actuator (4) reverse-action output
22	D4+	O	Focus actuator (4) forward-action output
23	PGND2	—	Ground connection (2) for driver
24	PVcc2	I	Power supply (2) for driver

www.manualscenter.com

■ Troubleshooting Guide

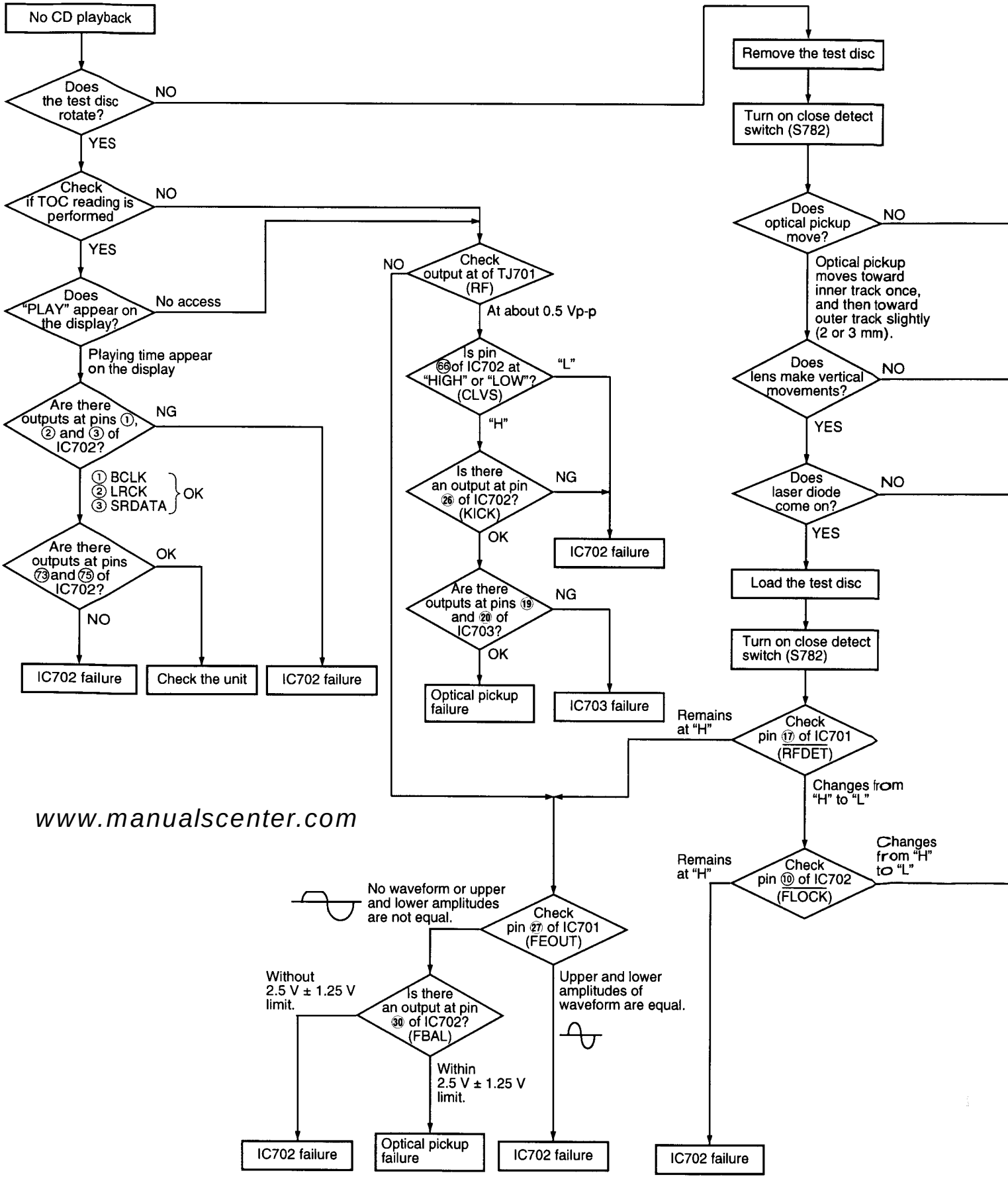

www.manualscenter.com

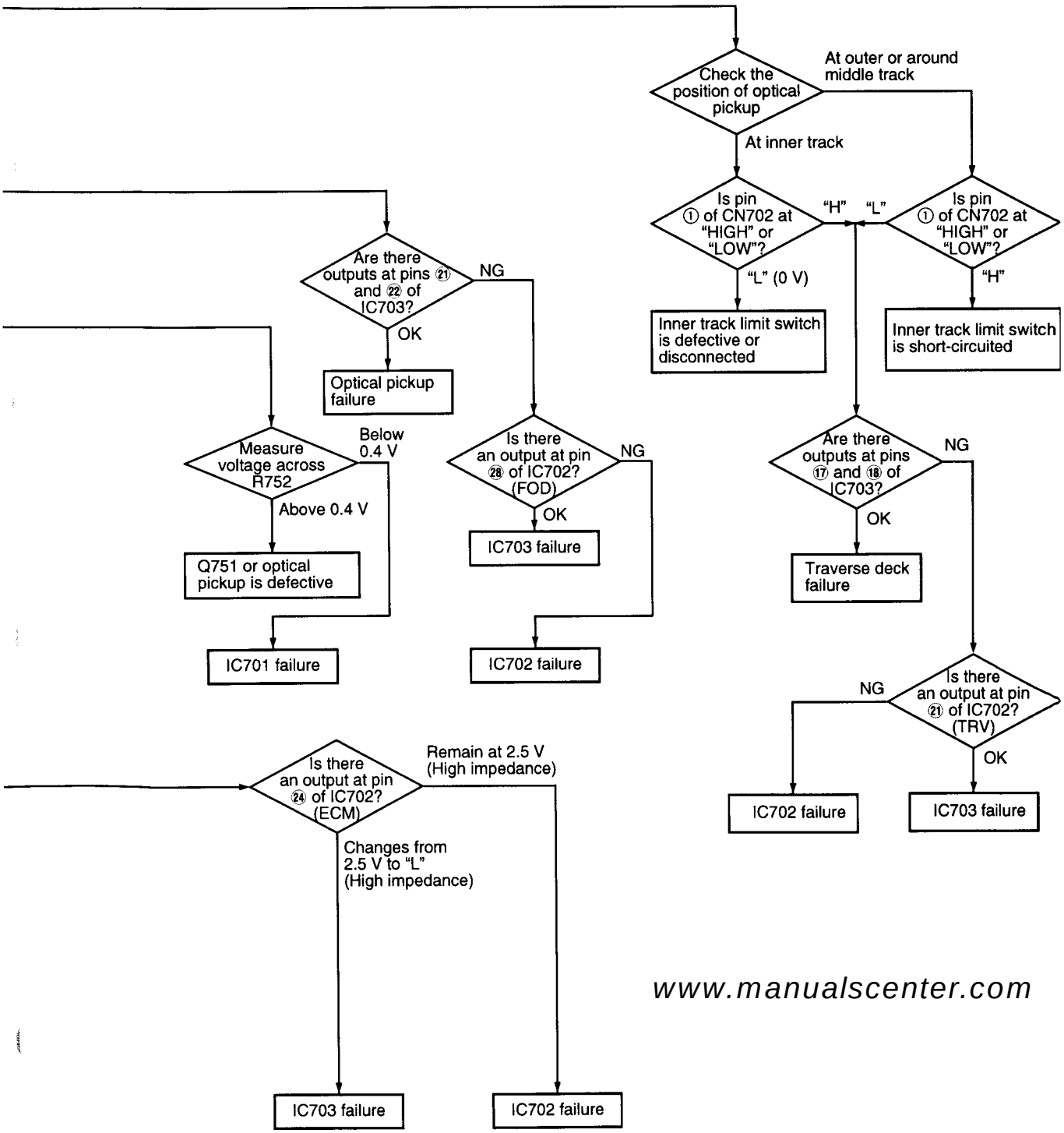

www.manualscenter.com

■ Cabinet Parts Location

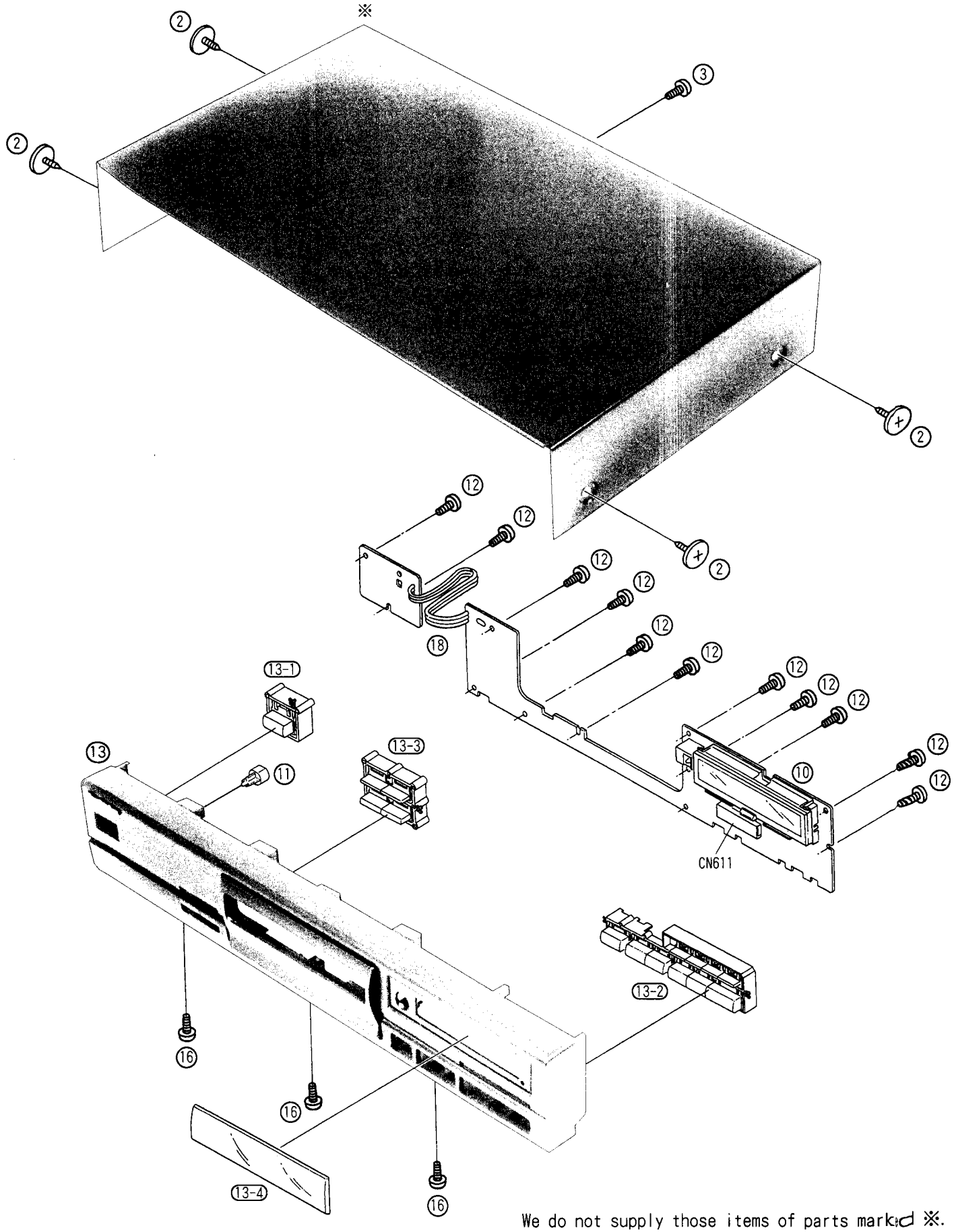

We do not supply those items of parts marked ※.

www.manualscenter.com

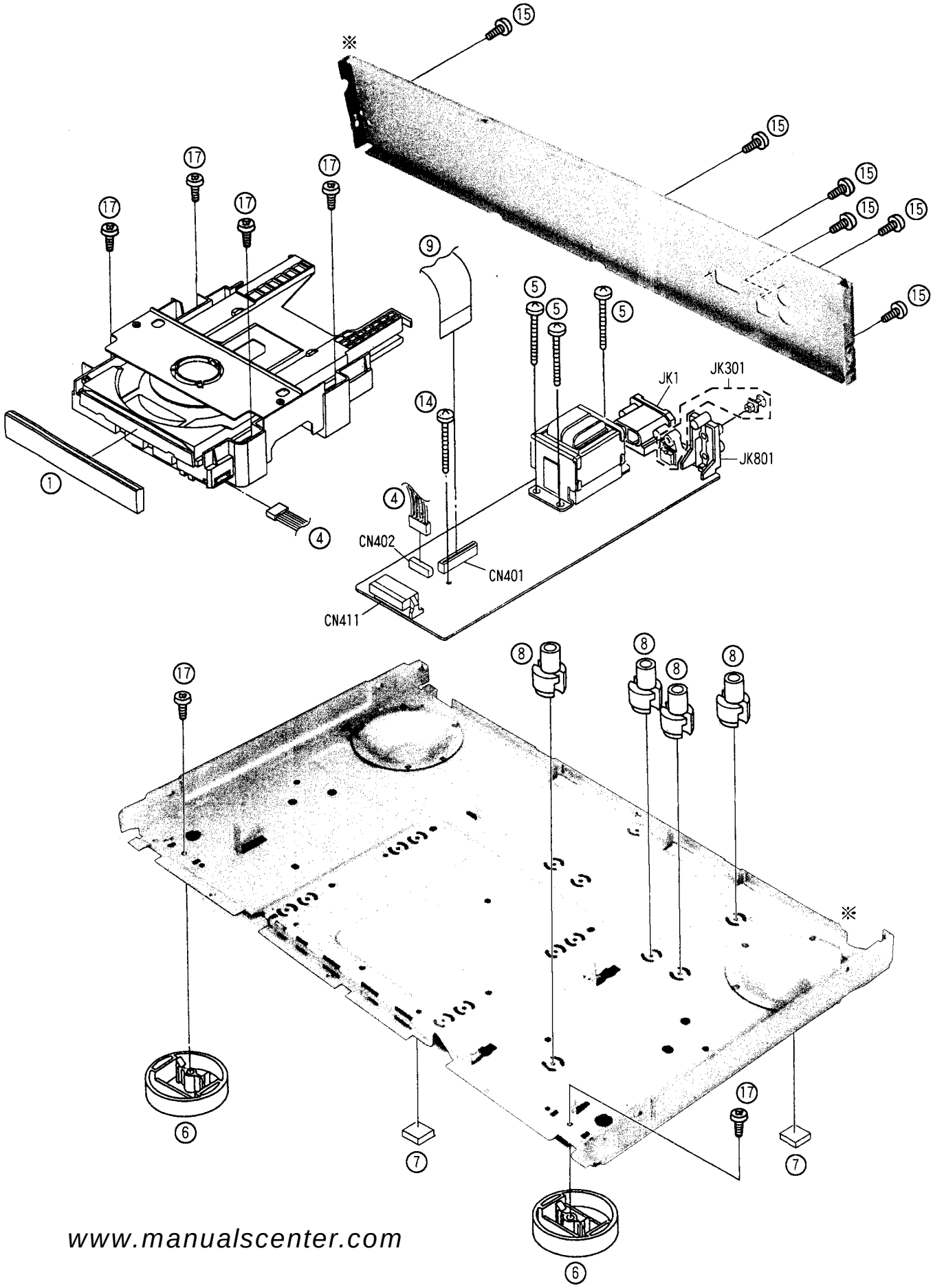

www.manualscenter.com

■ Loading Unit Parts Location

Note:
When changing mechanism parts, apply the specified grease to areas marked "xx" as shown in the drawing.

Ref No.	Parts No.
❶	RFKXEM30L

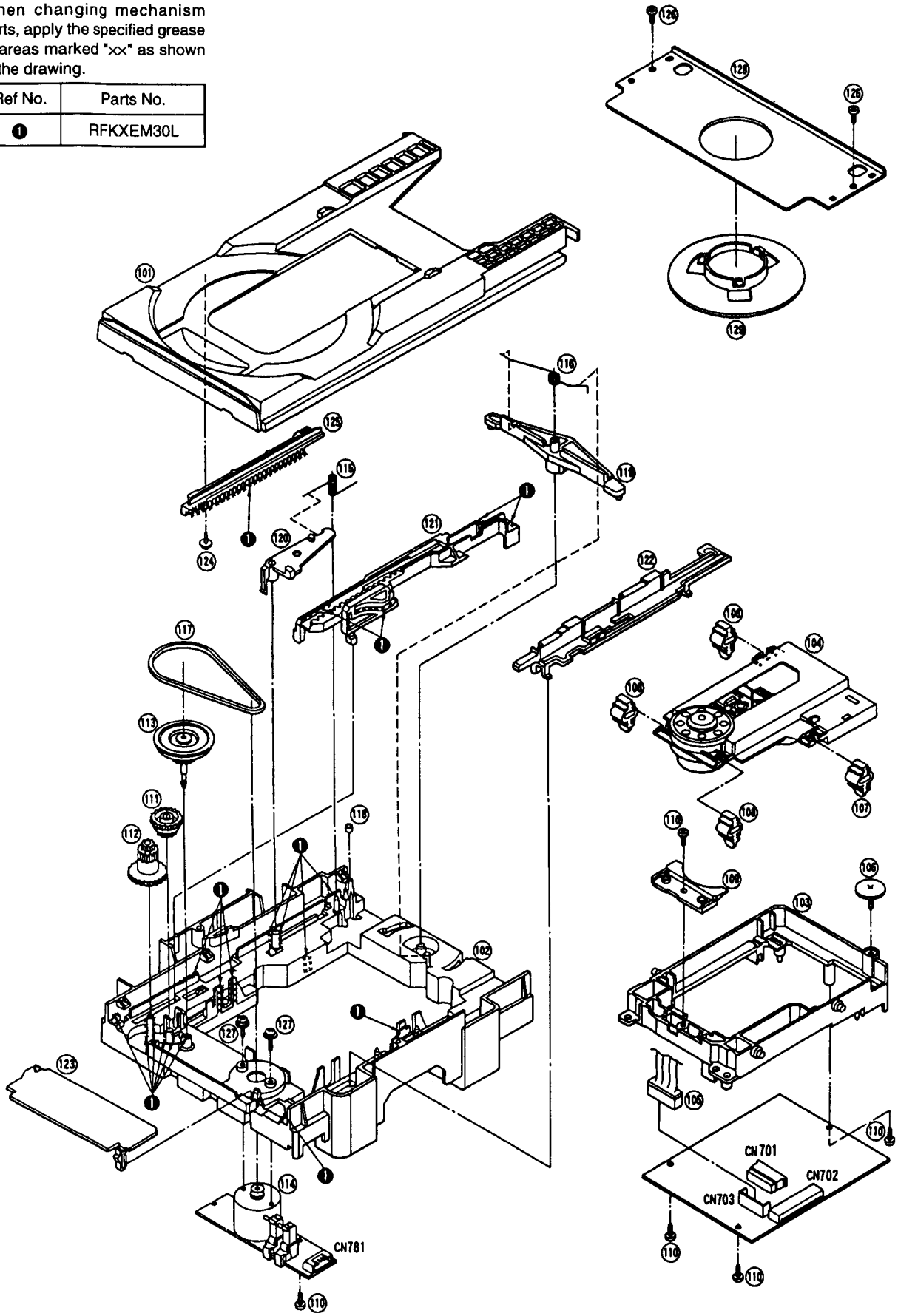

www.manualscenter.com

■ Packaging

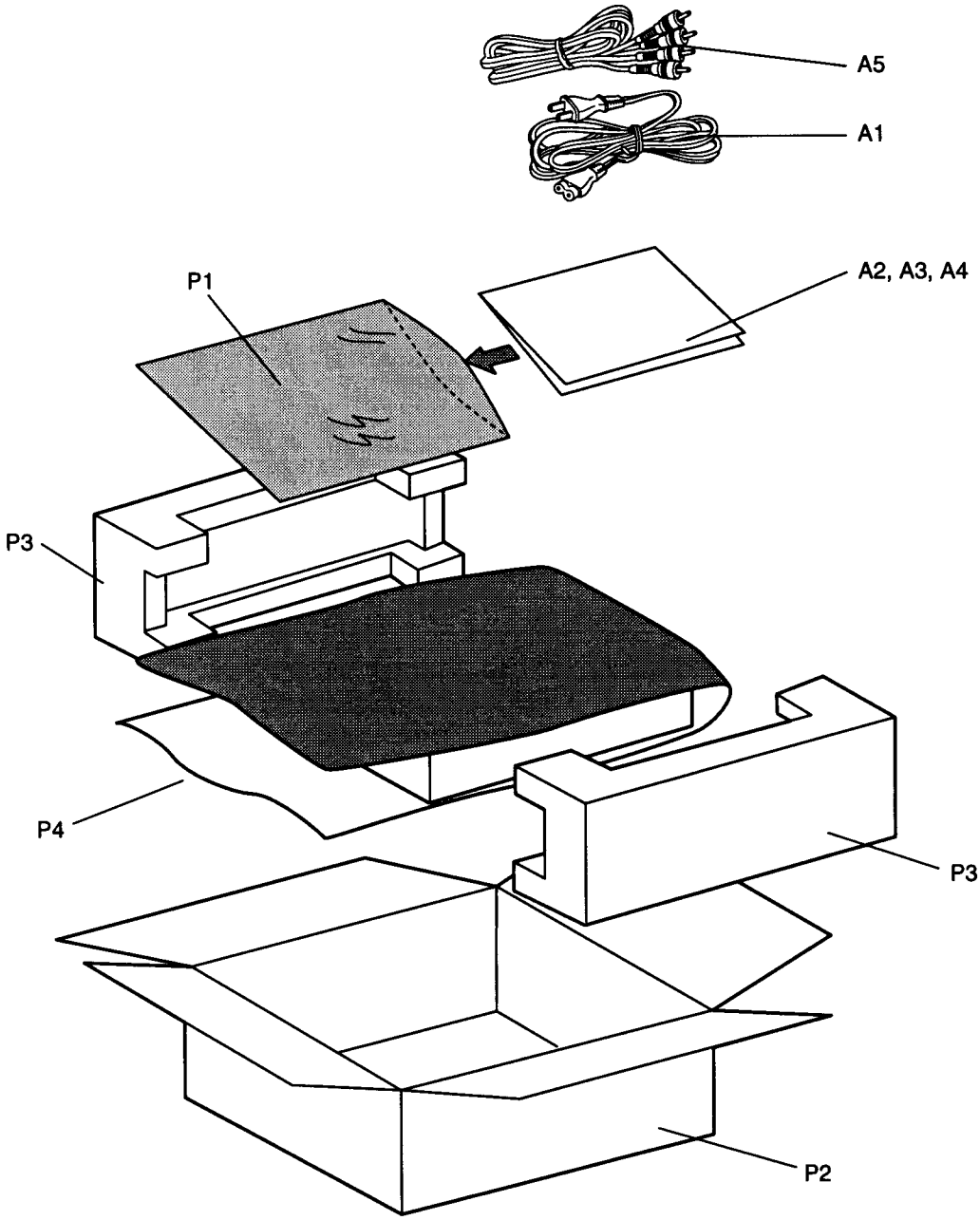

www.manualscenter.com

■ Replacement Parts List

Notes: *Important safety notice:
Components identified by ⚠ mark have special characteristics important for safety.
Furthermore, special parts which have purposes of fire-retardant (resistors), high-quality sound (capacitors), low-noise (resistors), etc. are used.
When replacing any of components, be sure to use only manufacture's specified parts shown in the parts list.
*The "MBV" mark in Remarks indicates source of supply.

Ref.No.	Part No.	Part Name & Description	Pcs	Remarks
1	RGK0703-K	ORNAMENT	1	MBV
2	RHD30035-K1	SCREW	4	
3	XTBS3+8JFZ1	SCREW	1	
4	REX0577-1	WIRE ASS'Y	1	MBV
5	RHD30053	SCREW	3	
6	RKA0040B-K1	FOOT	2	MBV
7	RMG0384-T	FOOT RUBBER	2	
8	RMR0377A-H	PCB SUPPORT	4	MBV
9	RWJ5223130EE	FFC(23P)	1	
10	RMR0826-K	VFD HOLDER	1	MBV
11	RGL0267-Q	LED INDICATOR	1	MBV
12	RHD26021	SCREW	11	
13	RYP0819Z-K	FRONT PANEL PRE ASSY	1	MBV
13-1	RGU1029-K	POWER BUTTON	1	MBV
13-2	RGU1197-K	MAIN BUTTON	1	MBV
13-3	RGU1199-K	SUB BUTTON	1	MBV
13-4	RKW0378-R	WINDOW	1	MBV
14	XTBR3+20JFZ	SCREW	1	
15	XTBS3+8JFZ1	SCREW	6	
16	XTB3+10JFZ	SCREW	3	
17	XTB3+8JFZ	SCREW (BLACK)	6	
18	RWJ1803150KK	FLAT CABLE	1	
101	RGQ0130-K	TRAY	1	MBV
102	RFKJLPG460AE	MECANISM CHASSIS ASS'Y	1	
103	RMR0719-W1	MID.CHASSIS	1	MBV
104	RAE1100Z-2	TRAVERSE UNIT	1	MBV
105	REX0576	WIRE ASS'Y	1	
106	RHD30047	SCREW	1	
107	RMG0337-K	DAMPING RUBBER	1	MBV
108	RMG0337-Q	DAMPING RUBBER	3	MBV
109	RMR0750-W	TRAVERSE STOPPER	1	MBV
110	XTBS26+8J	SCREW	2	
111	RDG0142	RELAY GEAR	1	
112	RDG0259	DRIVE GEAR 1	1	MBV
113	RDP0065	RELAY PULLY	1	
114	REM0047	MOTOR ASS'Y	1	MBV
115	RME0063	LOCK LEVER SPRING	1	
116	RME0087	SPRING	1	
117	RMG0158	BELT	1	
118	RMG0338-Q	STOPPER RUBBER	1	MBV
119	RML0177	CHANGE LEVER	1	
120	RML0352	LOCK LEVER	1	
121	RMM0112	SLIDE PLATE 1	1	MBV
122	RMM0113	SLIDE PLATE 2	1	MBV
123	RMR0721-K	GEAR COVER	1	MBV
124	RHD20009-1	SCREW	1	
125	RFKNLPG460AA	DRIVE RACK ASS'Y	1	MBV
126	XTB3+8JFZ	SCREW	2	
127	XYN2+F6FZ	SCREW	2	
128	RFKNLPG460AB	CLAMP BASE ASS'Y	1	MBV
129	RFKNLPG460AC	CLAMPER ASS'Y	1	MBV
⚠ A1	RJA0043-C	ACAC POWER SUPPLY CORD	1	(E,EG,EP)
⚠ A1	RJA0044-C	AC POWER SUPPLY CORD	1	(EB)
A2	RQA0117	WARRANTY CARD	1	
A3	RQCB0169	SERVICE CENTER LIST	1	(E,EB,EG)
A4	RQT4196-B	INSTRUCTION MANUAL	1	(E,EB,EP)MBV<IA>
A4	RQT4197-R	INSTRUCTION MANUAL	1	(E)MBV<IB>
A4	RQT4199-D	INSTRUCTION MANUAL	1	(EG)MBV<IC>
A4	RQT4200-H	INSTRUCTION MANUAL	1	(EG)MBV<ID>
A5	SJP2249-3	PIN CORD	1	
C1	ECFR1H103KB	50V 0.01U	1	
C10	ECFR1E104ZF5	25V 0.1U	1	
⚠ C11	ECA1CM222B	16V 2200U	1	
C12	ECBT1C103NS5	16V 0.01U	1	
C14	ECEA0JKA470B	6.3V 47U	1	
⚠ C15	ECEA1EU101B	25V 100U	1	
⚠ C16	ECEA1EU331	25V 330U	1	
C17,18	ECEA1HU101B	50V 100U	2	
C19	ECEA1EU101B	25V 100U	1	
C22	ECEA1AU331B	10V 330U	1	
C23	ECBT1H102KB5	50V 1000P	1	
C311	ECFR1E104ZF5	25V 0.1U	1	

Ref.No.	Part No.	Part Name & Description	Pcs	Remarks
C401	ECBT1C103NS5	16V 0.01U	1	
C404	ECBT1C103NS5	16V 0.01U	1	
C405	ECEA0JKA101B	6.3V 100U	1	
C451-55	ECBT1H101KB5	50V 100P	5	
C651	ECEA0JKA470I	6.3V 47U	1	
C703	ECEA0JKA101I	6.3V 100U	1	
C704	ECFR1E104ZF5	25V 0.1U	1	
C705	ECEA1HKA010I	50V 1U	1	
C706	ECBT1H101KB5	50V 100P	1	
C707	ECFR1C273JR	16V 0.027U	1	
C708	ECBT1C472MR5	16V 4700P	1	
C709	ECFR1C473KR	16V 0.047U	1	
C714	ECEA0JKA101I	6.3V 100U	1	
C716	ECBT1H561KB5	50V 560P	1	
C717	ECFR1E104ZF5	25V 0.1U	1	
C718	ECQV1H224JM3	50V 0.22U	1	
C721,22	ECBT1H100J5	50V 10P	2	
C723	ECEA0JKA221I	6.3V 220U	1	
C724	ECFR1E104ZF5	25V 0.1U	1	
C725,26	ECBT1H102KB5	50V 1000P	2	
C727,28	ECEA1HKA010I	50V 1U	2	
C730	ECFR1E104ZF5	25V 0.1U	1	
C731,32	ECEA0JKA221I	6.3V 220U	2	
C733	ECFR1E104ZF5	25V 0.1U	1	
C734	ECEA1AKA221I	10V 220U	1	
C735-37	ECBT1E223ZF5	25V 0.022U	3	
C738	ECFR1C183KR	16V 0.018U	1	
C739	ECBT1C152MR5	16V 1500P	1	
C740	ECBT1C272MR5	16V 2700P	1	
C742	ECFR1C273JR	16V 0.027U	1	
C743	ECBT1E223ZF5	25V 0.022U	1	
C744	ECBT1C822MS5	16V 8200P	1	
C747,48	ECBT1C103NS5	16V 0.01U	2	
C751	ECEA1CKA100I	16V 10U	1	
C752	ECFR1E104ZF5	25V 0.1U	1	
C765	ECBT1H331KB5	50V 330P	1	
C766	ECBT1H391KB5	50V 390P	1	
C767	ECEA1HKN010I	50V 1U	1	
C768	ECFR1E682KR	25V 6800P	1	
C769	ECBT1C222MR5	16V 2200P	1	
C772-75	ECFR1E104ZF5	25V 0.1U	4	
C776	ECBT1H180J5	50V 18P	1	
C777	ECBT1H680J5	50V 68P	1	
C781	ECEA1AKA101I	10V 100U	1	
C803-06	ECBT1H391KB5	50V 390P	4	
C807,08	ECEA0JKA470B	6.3V 47U	2	
C809,10	ECBT1H102KB5	50V 1000P	2	
C817	ECFR1E104ZF5	25V 0.1U	1	
CN401	RJS1A6823	CONNECTOR(23P)	1	
CN402	RJT029W06VT	CONNECTOR(6P)	1	
CN411	RJU076W24M1	CONNECTOR(24P)	1	MBV
CN611	RJT076W24M	CONNECTOR(24P)	1	MBV
CN701	RJS12Q9ZA	CONNECTOR(12P)	1	
CN702	RJS1A6723-1Q	CONNECTOR(23P)	1	
CN703	RJT029W06VT	CONNECTOR(6P)	1	
CN781	RJP6G17ZA	CONNECTOR(6P)	1	
⚠ D11-18	1D3-E	DIODE	8	
⚠ D19	MA4330M	DIODE	1	
D20	1SS254TA	DIODE	1	
⚠ D21	MTZJ8R2CTA	DIODE	1	
⚠ D22	MTZJ9R1CTA	DIODE	1	
D25,26	1SS254TA	DIODE	2	
D51	MA4039M	DIODE	1	
⚠ D401	MTZJ5R6BTA	DIODE	1	
D402	1D3-E	DIODE	1	
D601	1SS254TA	DIODE	1	
D605,06	1SS254TA	DIODE	2	
D651	SLR325LCT31	LED	1	MBV
D701	1SS254TA	DIODE	1	
D803,04	1SS254TA	DIODE	2	
FC651	RWJ1803150KK	FLAT CABLE (3P/FC651)	1	

www.manualscenter.com

Ref.No.	Part No.	Part Name & Description	Pcs	Remarks
FL601	RSL0201-F	FL DISPLAY	1	MBV
⚠ IC11	LM2940T5M	IC	1	
IC401	UPD78042A014	IC	1	
IC651	RCD12042TH	IC	1	
IC701	AN8805SBE1	IC	1	
IC702	MN662713RG1	IC	1	MBV
IC703	AN8389SE1	IC	1	
IC781	TA7291SA	IC	1	
IC801	BA4560FE1	IC	1	
⚠ JK1	SJS9236	AC INLET	1	
JK301	TOTX178	OPTICAL OUT	1	
JK801	SJF3068-5N	LINE OUT	1	
P1	RPF0139	POLYETHYLENE COVER	1	
P2	RPG3690	PAKING CASE	1	MBV
P3	RPN0861	CUSHION	1	MBV
P4	SPP730	PROTECTION BAG	1	
⚠ Q11	2SD2037EFTA	TRANSISTOR	1	
⚠ Q12	2SC1740SQSTA	TRANSISTOR	1	
Q13-15	2SA933SQRSTA	TRANSISTOR	3	
⚠ Q16	2SB1238QSTV6	TRANSISTOR	1	
Q19,20	2SD1450RTA	TRANSISTOR	2	
Q21	DTA124ESTP	TRANSISTOR	1	
Q22	2SC1740SQSTA	TRANSISTOR	1	
Q51,52	2SC1740SQSTA	TRANSISTOR	2	
⚠ Q402	2SD1862QRTV6	TRANSISTOR	1	
Q751	2SA933SQRSTA	TRANSISTOR	1	
Q752	2SC1740SQSTA	TRANSISTOR	1	
Q801,02	2SD1450RTA	TRANSISTOR	2	
Q851	DTC124ESTP	TRANSISTOR	1	
Q853	DTA114ESTP	TRANSISTOR	1	
⚠ R1	ERQ16NKWR15E	1/6W 0.15	1	
R12,13	ERDS2FJ102	1/4W 1K	2	
R14	ERDS2FJ103	1/4W 10K	1	
R15	ERDS2TJ822T	1/4W 8.2K	1	
R16	ERDS2FJ680	1/4W 68	1	
R17	ERDS2TJ331T	1/4W 330	1	
R18	ERDS2TJ473T	1/4W 47K	1	
R19	ERDS2FJ472	1/4W 4.7K	1	
R23	ERDS2FJ103	1/4W 10K	1	
R28-30	ERDS2FJ103	1/4W 10K	3	
R51	ERDS2TJ331T	1/4W 330	1	
R52	ERDS2FJ272	1/4W 2.7K	1	
R53,54	ERDS2FJ472	1/4W 4.7K	2	
R311	ERDS2TJ331T	1/4W 330	1	
R401	ERDS2FJ102	1/4W 1K	1	
R403,04	ERDS2FJ103	1/4W 10K	2	
R405,06	ERDS2TJ221T	1/4W 220	2	
R407	ERDS2FJ101	1/4W 100	1	
R408-11	ERDS2FJ103	1/4W 10K	4	
R413	ERDS2FJ102	1/4W 1K	1	
R451-55	ERDS2TJ471T	1/4W 470	5	
R601	ERDS2FJ220	1/4W 22	1	
R651	ERDS2TJ221T	1/4W 220	1	
R701	ERDS2TJ561T	1/4W 560	1	
R703	ERDS2FJ823	1/4W 82K	1	
R707,08	ERDS2TJ334T	1/4W 330K	2	
R709	ERDS2TJ683T	1/4W 68K	1	
R711	ERDS2TJ154T	1/4W 150K	1	
R712	ERDS2TJ221T	1/4W 220	1	
R714	ERDS2FJ222	1/4W 2.2K	1	
R717,18	ERDS2FJ102	1/4W 1K	2	
R721	ERDS2FJ101	1/4W 100	1	
R722	ERDS2TJ683T	1/4W 68K	1	
R723	ERDS2FJ183	1/4W 18K	1	
R724	ERDS2TJ333T	1/4W 33K	1	
R725	ERDS2FJ472	1/4W 4.7K	1	
R726	ERDS2FJ474	1/4W 470K	1	
R727	ERDS2TJ153T	1/4W 15K	1	
R728	ERDS2TJ822T	1/4W 8.2K	1	
R731	ERDS2TJ223T	1/4W 22K	1	

Ref.No.	Part No.	Part Name & Description	Pcs	Remarks
R732	ERDS2FJ183	1/4W 18K	1	
R733	ERDS2TJ822T	1/4W 8.2K	1	
R735,36	ERDS2FJ101	1/4W 100	2	
R745	ERDS2TJ155T	1/4W 1.5M	1	
R751	ERDS2FJ102	1/4W 1K	1	
R752,53	ERDS2FJ392	1/4W 3.9K	2	
R754	ERDS2FJ103	1/4W 10K	1	
R761,62	ERDS2FJ103	1/4W 10K	2	
R763	ERDS2FJ823	1/4W 82K	1	
R764	ERDS2FJ393	1/4W 39K	1	
R765	ERDS2FJ224	1/4W 220K	1	
R772,73	ERDS2FJ220	1/4W 22	2	
R775,76	ERDS2FJ392	1/4W 3.9K	2	
R777	ERDS2FJ102	1/4W 1K	1	
R803,04	ERDS2FJ224	1/4W 220K	2	
R805,06	ERDS2TJ822T	1/4W 8.2K	2	
R807,08	ERDS2TJ123T	1/4W 12K	2	
R809-12	ERDS2TJ333T	1/4W 33K	4	
R813-16	ERDS2FJ102	1/4W 1K	4	
R817,18	ERDS2TJ473T	1/4W 47K	2	
R819,20	ERDS2TJ100T	1/4W 10	2	
R852	ERDS2FJ222	1/4W 2.2K	1	
S601,02	EVQPTD05Q	SW	2	
S604,05	EVQPTD05Q	SW	2	
S621-30	EVQPTD05Q	SW	10	
S651	EVQPTD05Q	SW	1	
S781,82	RSH1A005	SW	2	
⚠ T1	RTP1K4B024A	POWER TRANSFORMER	1	MBV
X401	RSXY4M23M01T	OSCILLATOR	1	
X701	RSXB16M9J02T	OSCILLATOR	1	

The "<IA> <IB> <IC> <ID> " marks in Remarks indicate language of instruction manual.

<IA> : English
<IB> : Spanish, Swedish, Russian
<IC> : German, Italian, French
<ID> : Dutch, Danish

www.manualscenter.com

Printed in Germany
MBV F9803 AM/KH