WM-GX50/GX51

SERVICE MANUAL

AEP Model
UK Model
Saudi Arabia Model

WM-GX50

WM-GX51

Model Name Using Similar Mechanism	WM-BF608
Tape Transport Mechanism Type	MF-WMBF608

SPECIFICATIONS

WM-GX50

Radio section

Frequency range

Where purchased	FM (MHz)	AM (kHz)
In Italy	87.5—108	526.5—1606.5
In Germany	87.6—107	531 —1602
In Saudi-Arabia	87.6—107	530 —1605
In other countries	87.6—107.9	531 —1602

Intermediate frequency FM: 28.6 MHz 150 kHz
AM: 55 kHz

Power requirements 1.5 V DC
One R6 (size AA) battery
Rechargeable battery (NC-6WM) (not supplied)
DC IN 1.5 V jack accepts
Sony AC-E15L AC power adaptor
(not supplied) for use on:

European and Saudi-Arabia model	220 V AC, 50 Hz
Other model	120 V AC, 60 Hz 220 V AC, 50 Hz

Battery life (Approximate hours)

	Playback	Radio reception	Recording from the built-in radio
Sony AM3 (N)	5 hrs.	7 hrs.	2 hrs.

Dimensions
Approx. 108.6 × 78.8 × 35.2 mm(w/h/d)
(4⅜ × 3⅛ × 1 7/8 inches)
incl. projecting parts and controls

Weight
Approx. 223 g (7.9 oz) not incl. battery and other accessories

Accessories supplied
Stereo headphones (1)
Stereo microphone (1)
Microphone stand (1)
Carrying case (1)

Design and specifications subject to change without notice.

Note

This appliance conforms with EEC Directive 87/308/EEC regarding interference suppression.

Optional accessories* AC power adaptor AC-E15L
Car battery cord DCC-E115L
Rechargeable battery NC-6WM
Battery charger BC-7L

* Your dealer may not handle these optional accessories. Please ask the dealer for detailed information.

—Continued on page 2—

MICROFILM

RADIO CASSETTE CORDER

SONY®

WM-GX51

Radio section
Frequency range

Where purchased	FM (MHz)	AM (kHz)
In Italy	87.5—108	522—1611
In Germany	87.5—108	531—1602
In Saudi-Arabia	87.5—108	531—1602
In other countries	87.5—108	531—1602

Intermediate frequency
FM: 10.75 MHz
AM: 450 kHz
Antenna
FM: Headphones cord antenna
AM: Built-in ferrite bar antenna

Recording section
Recording system
4-track 2-channel stereo
Input
Microphone input (stereo minijack)
(PLUG IN POWER) sensitivity 0.77 mV (−60 dB) for lower impedance microphone

Tape player section and general
Frequency response (DOLBY NR off)
40 Hz—15 kHz (with the PB EQ selector set to NORMAL or CrO_2/METAL)
Output
Headphones (stereo minijack)
Load impedance 8—300Ω
Power output
5 mW + 5 mW at DC operation, 16Ω
Power requirements
1.5 V DC
Rechargeable battery
One R6 (size AA) battery
DC IN 1.5 V jack accepts:
- Sony AC-E15L AC power adaptor (not supplied)
  available in the United Kingdom for use on 240 V AC, 50 Hz
  available in other European countries for use on 220 V AC, 50 Hz
  available in other countries for use on 100—120 V AC or 220—240 V AC, 50 or 60 Hz
- Sony DCC-E115L (not supplied) for use with 12 V car battery

Battery life (hours)

Battery	Playback	Radio reception	Recording from the built-in radio
Sony AM3 (N)	Approx. 5	Approx. 7	Approx. 2

For maximum performance we recommend the use of alkaline batteries.

Dimensions
Approx. 108.6 × 78.8 × 35.2 mm(w/h/d)
($4^3/_8$ × $3^1/_8$ × $1^7/_{16}$ inches)
incl. projecting parts and controls
Weight
Approx. 226 g (8.0 oz) not incl. battery and other accessories
Accessories supplied
Lithium battery (CR2016) (1) Microphone (1)
Microphone stand (1) Stereo headphones (1)
Carrying case (1)

Design and specifications subject to change without notice.

Note
This appliance conformes with EEC Directive 87/308/EEC regarding interference suppression.

Optional accessories
AC power adaptor AC-E15L
Battery charger BC-7L
Rechargeable battery NC-6WM,
Car battery cord DCC-E115L
Lithium battery CR2016

Your dealer may not handle some of the above listed optional accessories. Please ask the dealer for detailed information.

TABLE OF CONTENTS

Section — Title — Page

SECTION 1. GENERAL
Parts Identification Nomenclature (WM-GX50) 3
Parts Identification Nomenclature (WM-GX51) 4
Service Notes 5

SECTION 2. DISASSEMBLY
2-1. Cabinet (Rear) Assy Removal 6
2-2. Flexible Board Removal 6
2-3. Tuner Board Removal (WM-GX50) 6
Tuner Board Removal (WM-GX51) 7

SECTION 3. ADJUSTMENTS
3-1. Mechanical Measurements 8
3-2. Electrical Adjustments 8

SECTION 4. DIAGRAMS
4-1. Block Diagram (Audio Section) 15
Block Diagram (Tuner Section WM-GX50) 17
Block Diagram (Tuner Section WM-GX51) 19
4-2. Printed Wiring Boards (Audio Section) 21
4-3. Schematic Diagram (Audio Section) 25
4-4. Schematic Diagram (Tuner Section WM-GX51) 30
4-5. Printed Wiring Boards (Tuner Section WM-GX51) 33
4-6. Printed Wiring Boards (Tuner Section WM-GX50) 35
4-7. Schematic Diagram (Tuner Section WM-GX50) 37

SECTION 5. EXPLODED VIEWS
5-1. Cabinet Section-1 39
5-2. Cabinet Section-2 40
5-3. Mechanism Section-1 (MF-WMBF608) 41
5-4. Mechanism Section-2 (MF-WMBF608) 42

SECTION 6. ELECTRICAL PARTS LIST 43

SAFETY-RELATED COMPONENT WARNING!!

COMPONENTS IDENTIFIED BY MARK ⚠ OR DOTTED LINE WITH MARK ⚠ ON THE SCHEMATIC DIAGRAMS AND IN THE PARTS LIST ARE CRITICAL TO SAFE OPERATION. REPLACE THESE COMPONENTS WITH SONY PARTS WHOSE PART NUMBERS APPEAR AS SHOWN IN THIS MANUAL OR IN SUPPLEMENTS PUBLISHED BY SONY.

WARNING !!

ADVARSEL!
Lithiumbatteri – Eksplosionsfare
Udskiftning må kun foretages
af en sagkyndig, og som
beskrevet i servicemanualen.

LITHIUM BATTERY
SHOULD ONLY BE CHANGED BY TECHNICAL PERSONNEL. THERE IS A RISK FOR EXPLOSION AT A WRONG HANDLING.

SECTION 1
GENERAL

This section is extracted from instruction manual.

WM-GX50

A Parts Identification Nomenclature

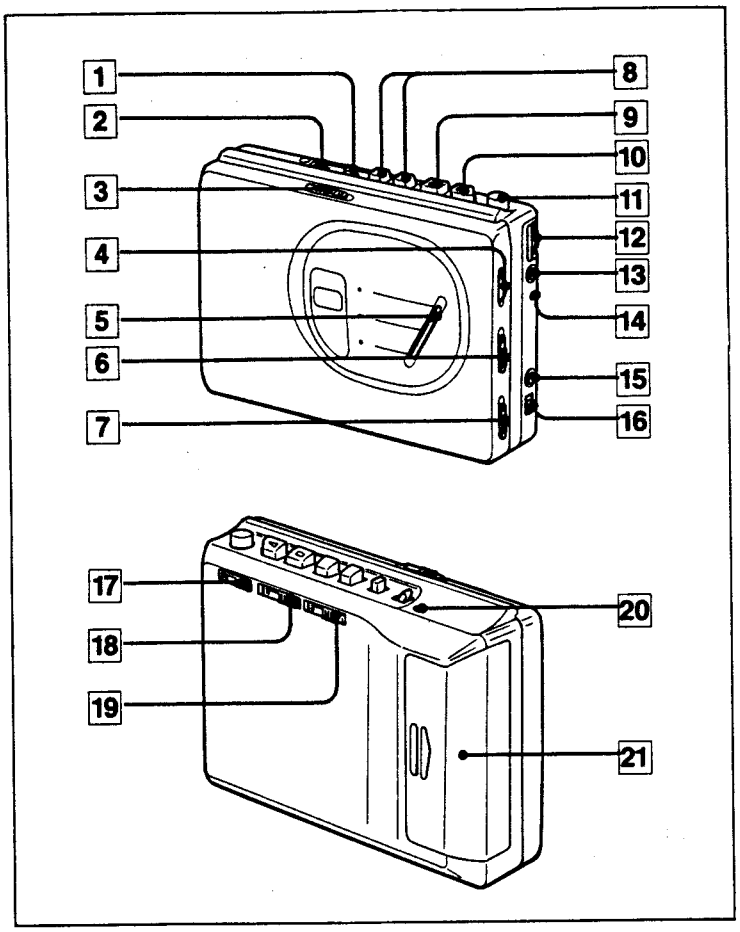

Parts Identification

(See illustration A.)

1 DIR (tape transport direction change) button
2 ⇄MODE (tape transport) selector
3 FM SENS (LOCAL/DX) selector
4 Tuning control
5 Dial scale
6 BAND (FM/AM) selector
7 RADIO (FM MONO/FM ST)/TAPE (RADIO OFF) selector
8 ◀◀/▶▶ (fast winding) button
9 ■ STOP/EJECT button
10 ▶ PLAY button
11 ● REC (record) button
12 VOLUME control
13 ∩ PHONES (headphones) jack
14 BATTERY indicator
15 MIC (microphone) (PLUG IN POWER) jack
16 MEGA BASS (NORM/MID/MAX) selector
17 PB EQ (CrO_2/METAL NORMAL) selector
18 DOLBY NR (PB) (Dolby noise reduction)(ON/OFF) selector
19 ISS (Interference Suppress Switch) selector
20 DC IN 1.5 V (external power input) jack
21 Battery compartment lid

WM-GX51

A Parts Identification Nomenclature

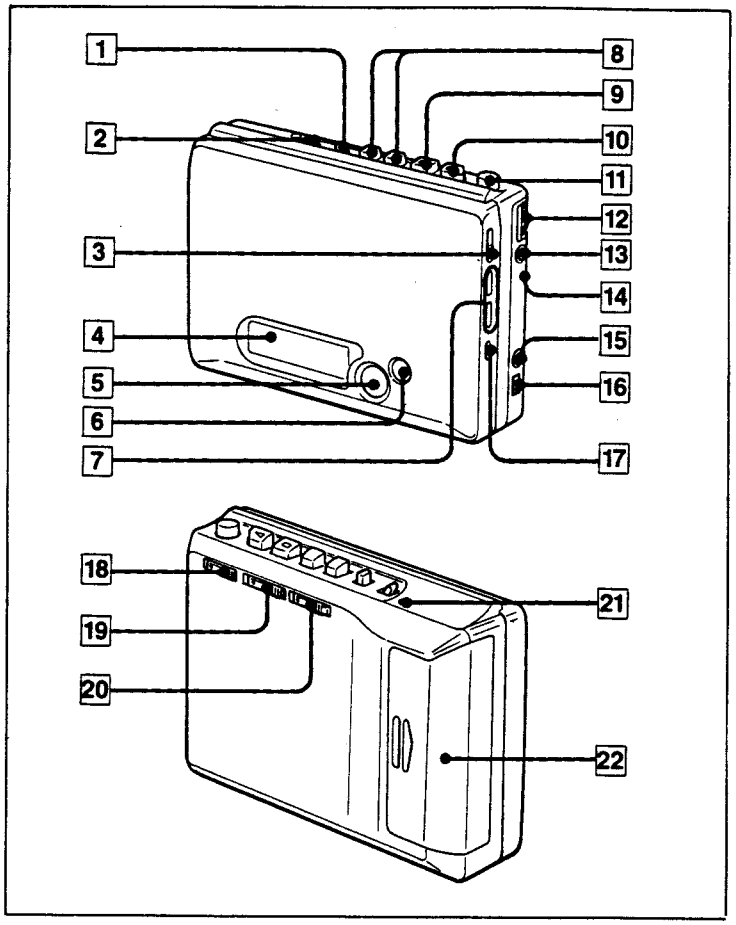

Parts Identification

(See illustration A.)

1 DIR (tape transport direction change) button
2 ⇄MODE (tape transport) selector
3 FM ST/MONO (stereo/monaural) selector
4 Display window
5 PRESET TUNE button
6 RADIO ON/OFF BAND button
7 +SCAN− buttons
8 ◀◀/▶▶ (fast winding) buttons
9 ■ STOP/EJECT button
10 ▶ PLAY button
11 ● REC (record) button
12 VOLUME control
13 ∩ PHONES (headphones) jack
14 BATTERY indicator
15 MIC (microphone) (PLUG IN POWER) jack
16 MEGA BASS (NORM/MID/MAX) selector
17 ENTER button
18 PB EQ (CrO_2/METAL NORMAL) selector
19 DOLBY NR (PB) (Dolby noise reduction) (ON/OFF) selector
20 ISS (Interference Suppress Switch) selector
21 DC IN 1.5 V (external power input) jack
22 Battery compartment lid

Service Notes

How to check the operation

When audio board has been removed from mechanical deck. Depress the PLAY (►) button to turn ON the S402 (POWER) and S401 (PLAY).

AUDIO BOARD - Component side -

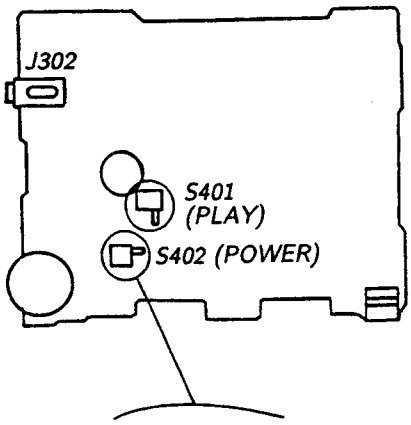

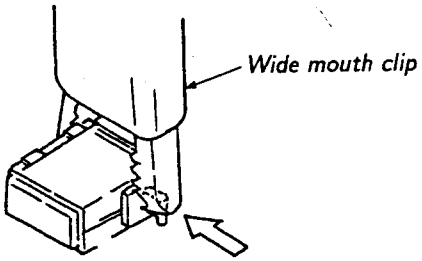

Flexible Circuit Board Repairing

-Keep the temperature of the soldering iron around 270℃ during repairing.

-Do not touch the soldering iron on the same conductor of the circuit board (within 3 times).

-Be careful not to apply force on the conductor when soldering or unsoldering.

Notes on Chip Component Replacement

-Never reuse a disconnected chip component.

-Notice that the minus side of a tantalum capacitor may be damaged by heat.

SECTION 2
DISASSEMBLY

Note : Follow the disassembly procedure in the numerical order given.

2-1. CABINET (REAR) ASSY REMOVAL

1. Remove five screws marked ❶.
2. Open the cassette lid assy.
3. Pull a part (marked Ⓐ) of cabinet (rear) assy slowly toward outside in order to remove the claw and lift up it to direction of arrow ❷.

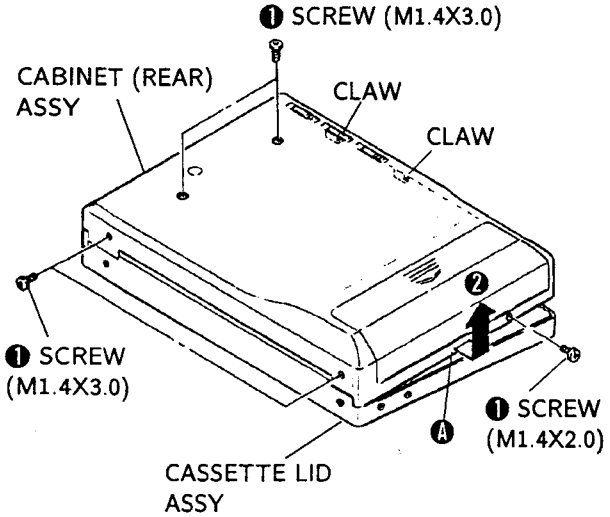

2-2. FLEXIBLE BOARD REMOVAL

1. Push a part (marked Ⓐ) of CN302 toward direction of arrow ❶.
2. Pull the flexible board toward direction of arrow ❷.

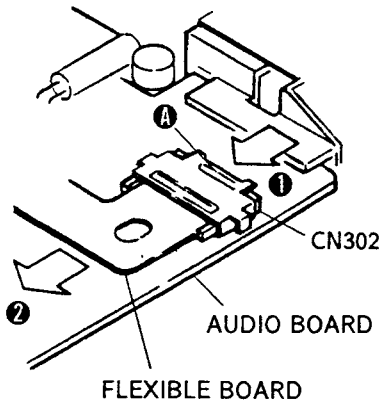

2-3. TUNER BOARD REMOBAL (WM-GX50)

1. Remove two screws marked ❶.
2. Remove the cover.
3. Remove the knob (SENS).
4. Warm up Ⓐ to Ⓓ portion by heater and move it slowly by tweezers.

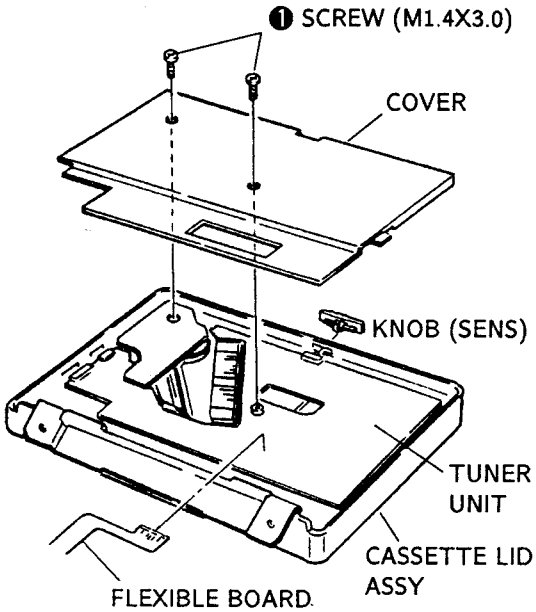

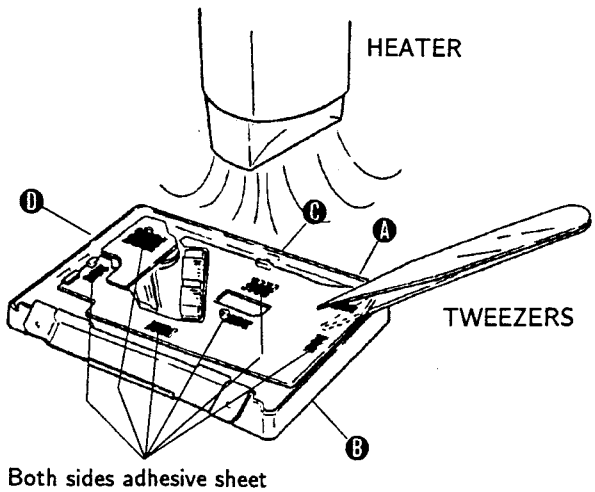

2-3. TUNER BOARD REMOBAL (WM-GX51)

1. Remove screw marked ❶.
2. Remove the cover.
3. Slide the battery case (LITHIUM) horizontaly and lift up toward direction of arrow ❷.
4. Remove screw marked ❸.
5. Lift up a part (marked Ⓐ) tuner board toward direction of arrow ❹.

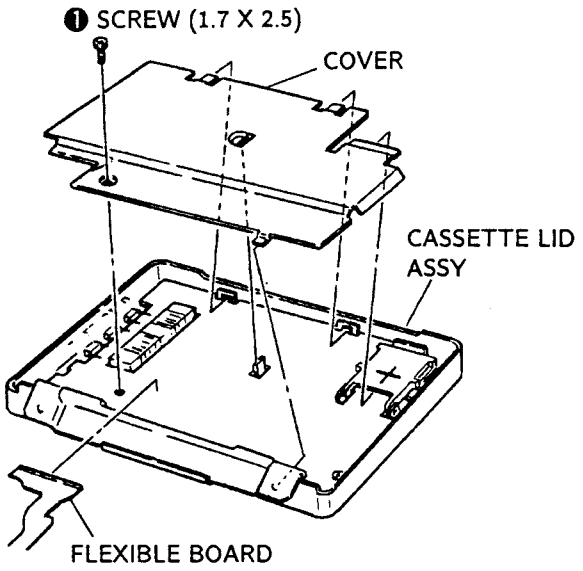

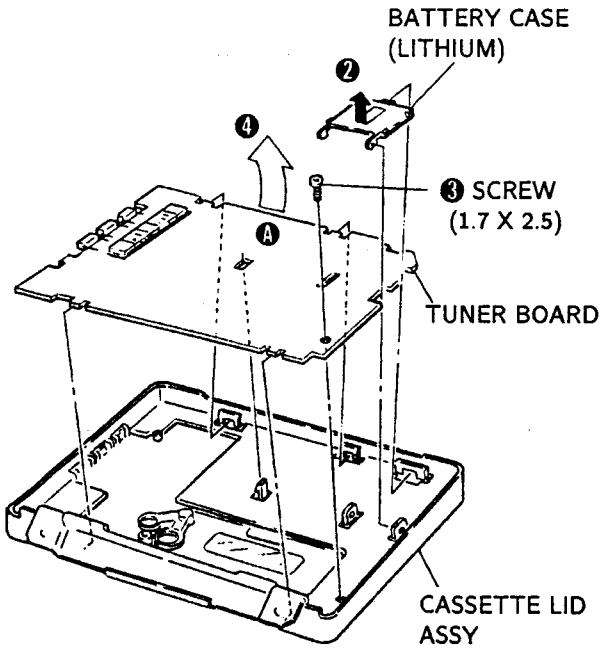

SECTION 3
ADJUSTMENTS

3-1. Mechanical measurements

PRECAUTION

1. Clean the following parts with a denatured-alcohol-moistened swab :
   playback head pinch roller
   capstan rubber belts
2. Demagnetize the playback head with a head demagnetizer.
3. Do not use a magnetized screwdriver for the adjustments.
4. After the adjustments, apply suitable locking compound to the parts adjusted.
5. The adjustments should be performed with the rated power supply voltage (1.3V) unless otherwise noted.

Torque Measurement

Mode	Torque meter	Meter reading
FWD	CQ-102C	22 - 38 g-cm 0.31 - 0.52 oz-inch
FWD Back Tension		1.0 - 3.0 g-cm 0.02 - 0.04 oz-inch
REV	CQ-102RB	22 - 38 g-cm 0.31 - 0.52 oz-inch
REV Back Tension		1.0 - 3.0 g-cm 0.02 - 0.04 oz-inch
FF	CQ-201B	more than 50 g-cm more than 0.7 oz-inch
REW		more than 50 g-cm more than 0.7 oz-inch

Tape Tension Measurement

Mode	Torque meter	Meter reading
FWD	CQ-403A	more than 50 g more than 1.77 oz
REV	CQ-403R	more than 50 g more than 1.77 oz

3-2. ELECTRICAL ADJUSTMENTS

PRECAUTION

1. Power supply voltage : 1.3V
2. Switch position
   FM switch : ST
   DOLBY switch : OFF
   DBB switch : NORM

Cassette Section

TEST TAPE

Type	Signal	Used for
WS-48A	3kHz, 0dB	Tape Speed Adjustment

Tape Speed Adjustment

Procedure :

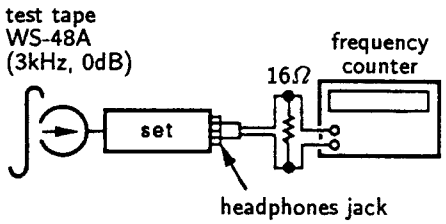

1. Playback WS-48A (tape center portion) in FWD mode.
   Adjust the RV601 so that the frequency counter read 3,000Hz ± 30Hz.
2. Playback WS-48A (tape center portion) in REV mode.
   Confirm that the reading of frequency counter is with 2.5% from the reading in step 1.

Adjustment Parts Location Digram

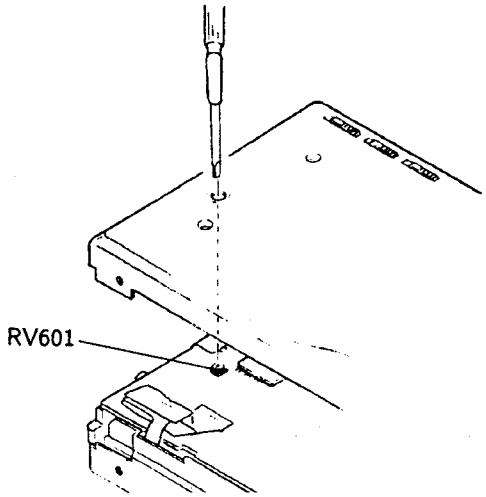

2. Playback check

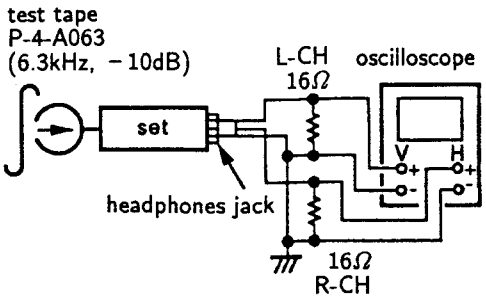

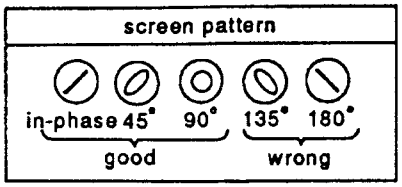

Tape Speed Adjustment

Procedure :

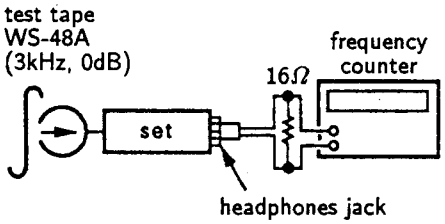

1. Playback WS-48A (tape center portion) in FWD mode.
   Adjust the RV601 so that the frequency counter read 3,000Hz ± 30Hz.
2. Playback WS-48A (tape end portion) in REV mode.
   Confirm that the reading of frequency counter is with 2.5% from the reading in step 1.

Adjustment Parts Location Digram

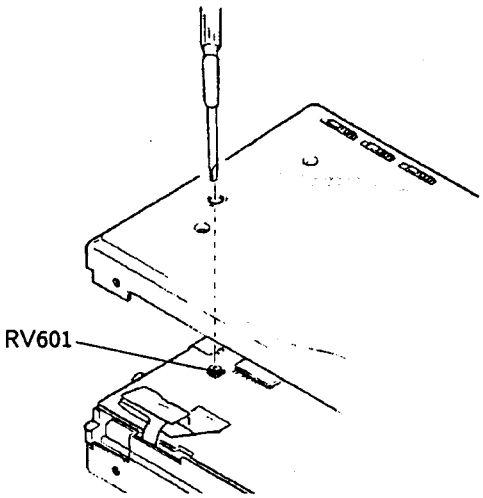

Tuner Section ONLY for WM-GX50

Power Supply Voltage Adjustment

Function switch : RADIO FM ST
Band switch : FM

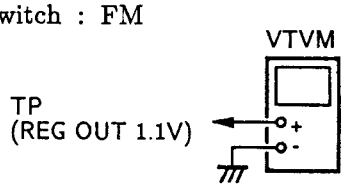

Adjustment part	Reading on VTVM
RV53	1.1 ± 0.01V

Tuning Voltage Adjustment

Function switch : RADIO FM ST
Band switch : FM

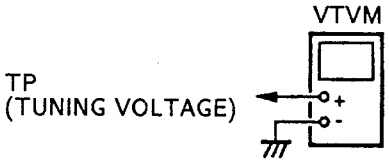

- Repeat the procedure in each adjustment several times since RV (*f* min) affects RV (*f* max) and RV (*f* max) affects RV (*f* min). This adjustment should end with the final adjustement of RV (*f* max).

Pointer position	Adjustment part	Reading on VTVM
f minimum	RV (fmin 1.0V)	1V±0.01V
f maximum	RV (fmax 9V)	9V±0.01V

Note :
RV (*f* min), RV (*f* max) is built-in the RV51 block.

FM VCO Adjustment

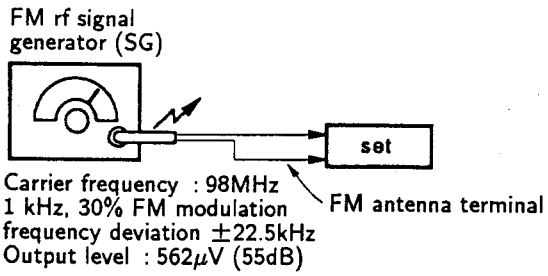

Function switch : RADIO FM ST
Band switch : FM

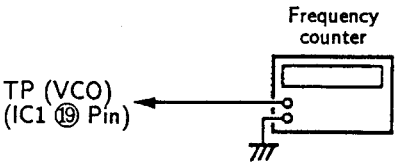

- Tune the set to 98 MHz.

Adjustment part	frequency counter
L5	37.95kHz±0.03kHz

FM 2nd OSC Adjustment

Function switch : RADIO FM ST
Band Switch : FM
Adjustment part : L6

- **How to adjust FM 2nd. oscillator useing the spectrum analyzer.**

1. Prepared the spectrum analyzer and RF amplifier as shown in below drawing.
2. Set the switch to radio FM stereo position of WM -GX50.
3. Put the RF amplifeir block which connected to spectrum analyzer to just beside and one centi-meter away from L6.
4. Adjust L6 to bring up maximum waveform at 57.3MHz position in spectrum analyzer.

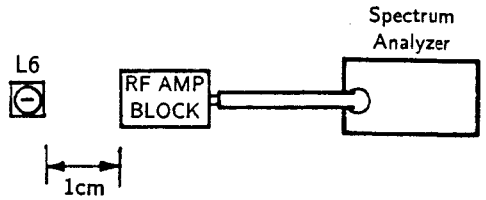

- **How to adjust FM 2nd. oscillator if the spectrum analyzer is not available.**

1. Prepared built-in SSB digital tuning radio such as SONY ICF-2001 or equivalents.
2. Tuned 57.3MHz ± 0.1MHz at the SSB mode of built-in SSB digital tuning radio.
3. Set the switch to radio FM stereo position of WM -GX50.
4. Put the telescopic antenna of built-in SSB digital tuning radio to just beside and one centi-meter away from L6 as show in below drawing.
5. Digital tuning radio will be reproduce peep sound.
6. Adjust L6 to fade out or minimize peep sound.

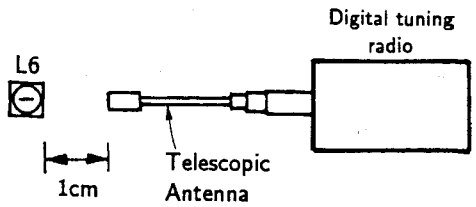

FM Frequency Coverage Adjustment

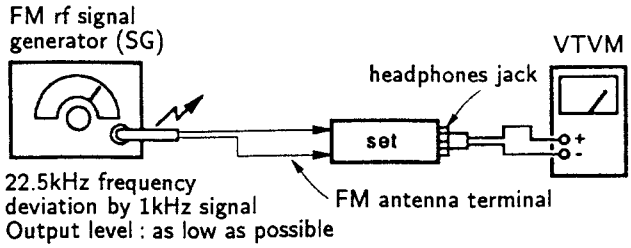

Function switch : RADIO FM ST

Band switch : FM

- Repeat the procedure in each adjustment several times since L3 affects CT3 and CT3 affects L3. This adjustment should end with the final adjustment of CT3.

Pointer position	SG frequency	Adjustment part	Reading on VTVM
f minimum	(86.5 MHz) 〔87.35MHz〕 <87.35MHz>	L3	maximum
f maximum	(109.5 MHz) 〔107.8MHz〕 <108.25MHz>	CT3	maximum

( ) : AEP model only
〔 〕 : German, Saudi Arabia model only
< > : Italian model only

AM Frequency Coverage Adjustment

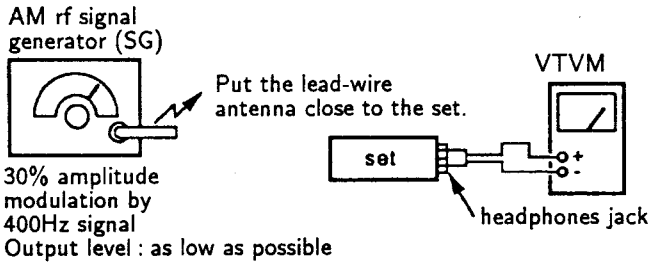

Function switch : RADIO FM ST

Band switch : AM

- Repeat the procedure in each adjustment several times since L1 affects CT1 and CT1 affects L1. This adjustment should end with the final adjustment of CT1.

Pointer position	SG frequency	Adjustment part	Reading on VTVM
f minimum	515kHz <516.5kHz>	L1	maximum
f maximum	1680kHz <1631.5kHz>	CT1	maximum

< > : Italian model only

AM Tracking Adjustment

Function switch : RADIO FM ST

Band switch : AM

- Repeat the procedure in each adjustment several times since L2 affects CT2 and CT2 affects L2. This adjustment should end with the final adjustment of CT2.

NOTE :

Test equipment is settled as same as AM Frequency coverage adjsutment.

SG and set frequency	Adjustment part	Reading on VTVM
620kHz	L2	maximum
1400kHz	CT2	

Adjustment Location

— component side —

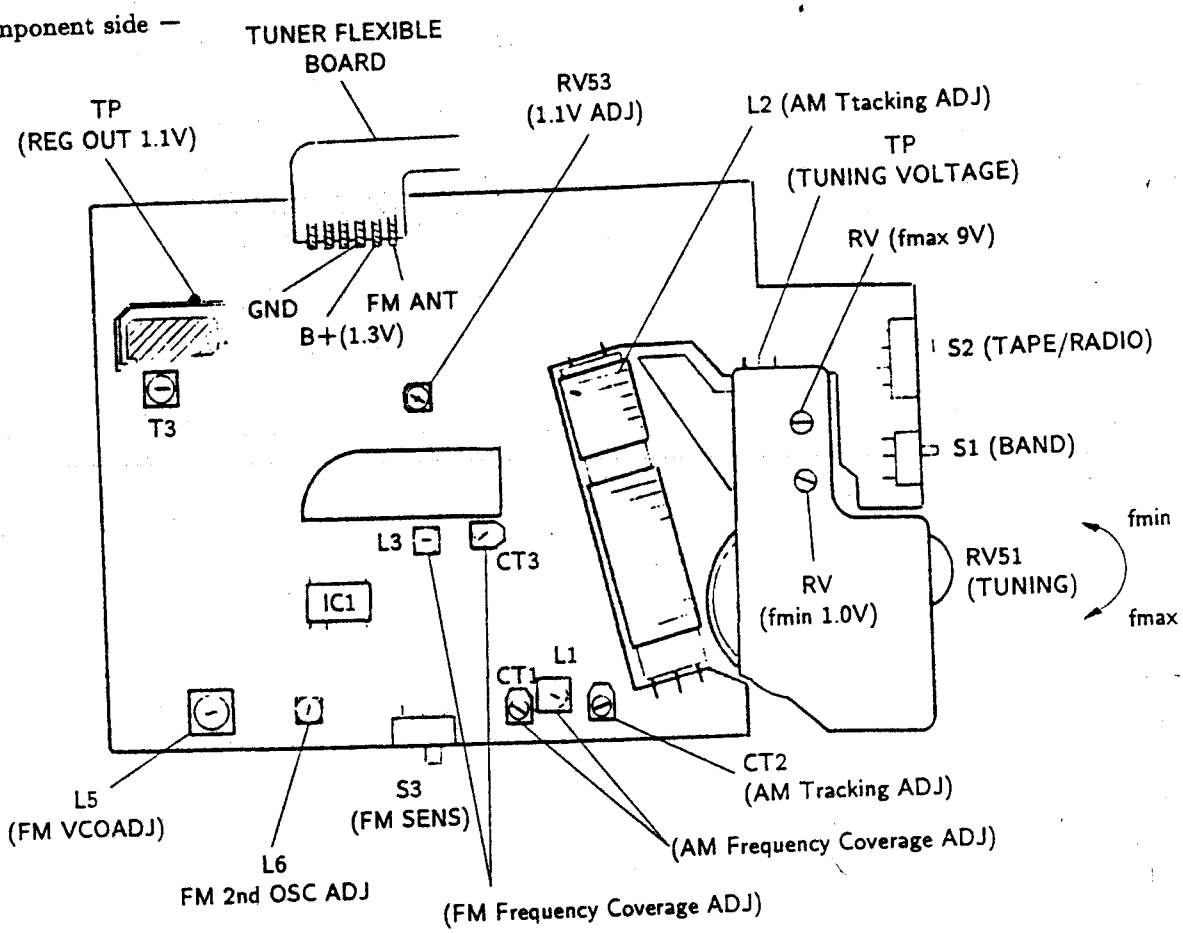

Tuner Section ONLY for WM-GX51

FM SECTION

BAND switch : FM

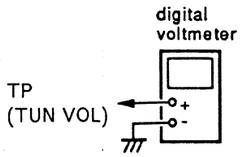

FM TUNING VOLTAGE ADJUSTMENT	
Adjust for following values on digital voltmeter.	
Display indication	FM 87.5MHz
Digital voltmeter reading	2.7V ± 0.02V
Adjustment part	L3

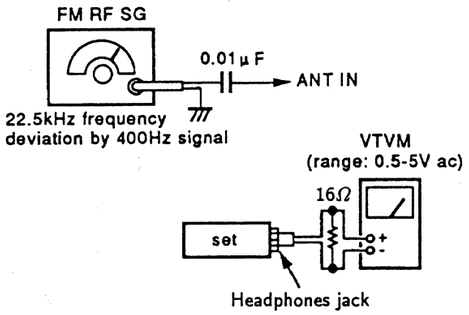

- Repeat the procedures in each adjustment severl times, and the tracking adjustment should be finally done by the trimmer capacitors.

FM TRACKING ADJUSTMENT		
Adjust for maximum reading on VTVM.		
Display indication	FM 87.5MHz	FM 108.0MHz
SG frequency	87.5MHz	108.0MHz
Adjustment part	L2	CT2

VCO Adjustment

BAND switch : FM

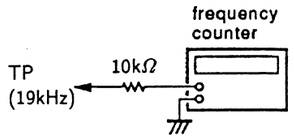

Procedure :

1. Connect an electrolyric capacitor 1μF between TP (DET OUT) and ground.
2. Adjust RV1 for 19 ± 0.02kHz on the counter.
3. Remove electrolytic capacitor connected in step 1.

AM SECTION

BAND switch : AM

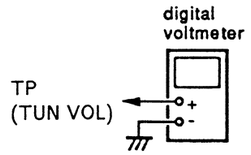

AM TUNING VOLTAGE ADJUSTMENT	
Adjust for following values on digital voltmeter.	
Display indication	AM 531kHz
Digital voltmeter reading	1.1V ± 0.02V
Adjustment part	T2

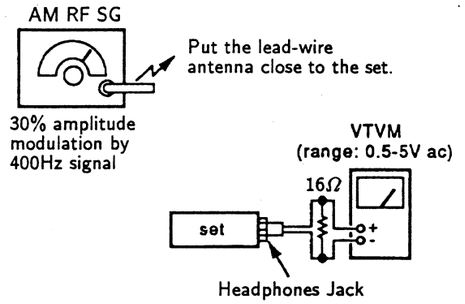

- Repeat the procedures in each adjustment severl times, and the tracking adjustment should be finally done by the trimmer capacitors.

AM TRACKING ADJUSTMENT		
Adjust for maximum reading on VTVM.		
Display indication	AM 621kHz	AM 1,395kHz
SG frequency	621kHz	1,395kHz
Adjustment part	L1	CT1

AM IF ALIGNMENT	
Adjust for for a maximun reading on VTVM.	
SG frequency	455kHz
Adjustment part	T1

Adjustment Location

TUNER BOARD

— Component Side —

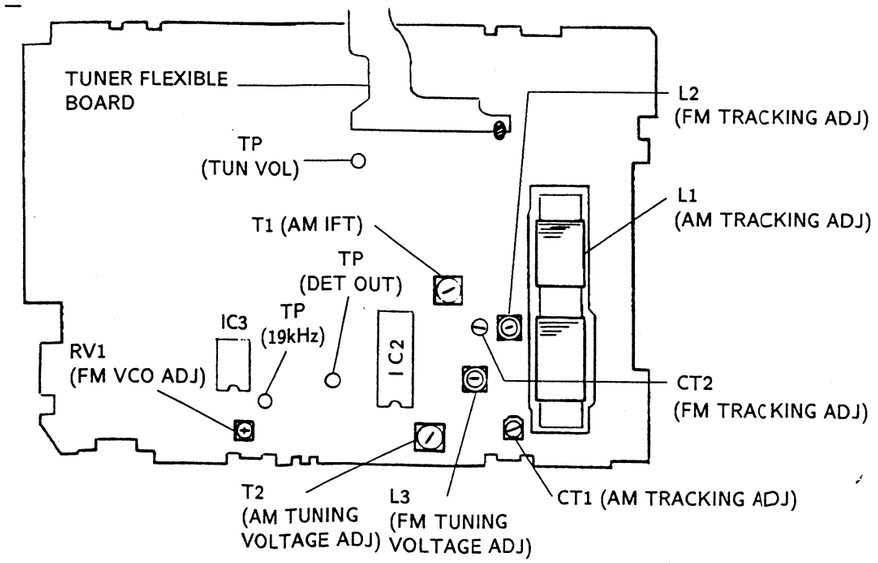

SECTION 4
DIAGRAMS

4-1. BLOCK DIAGRAM (AUDIO SECTION)

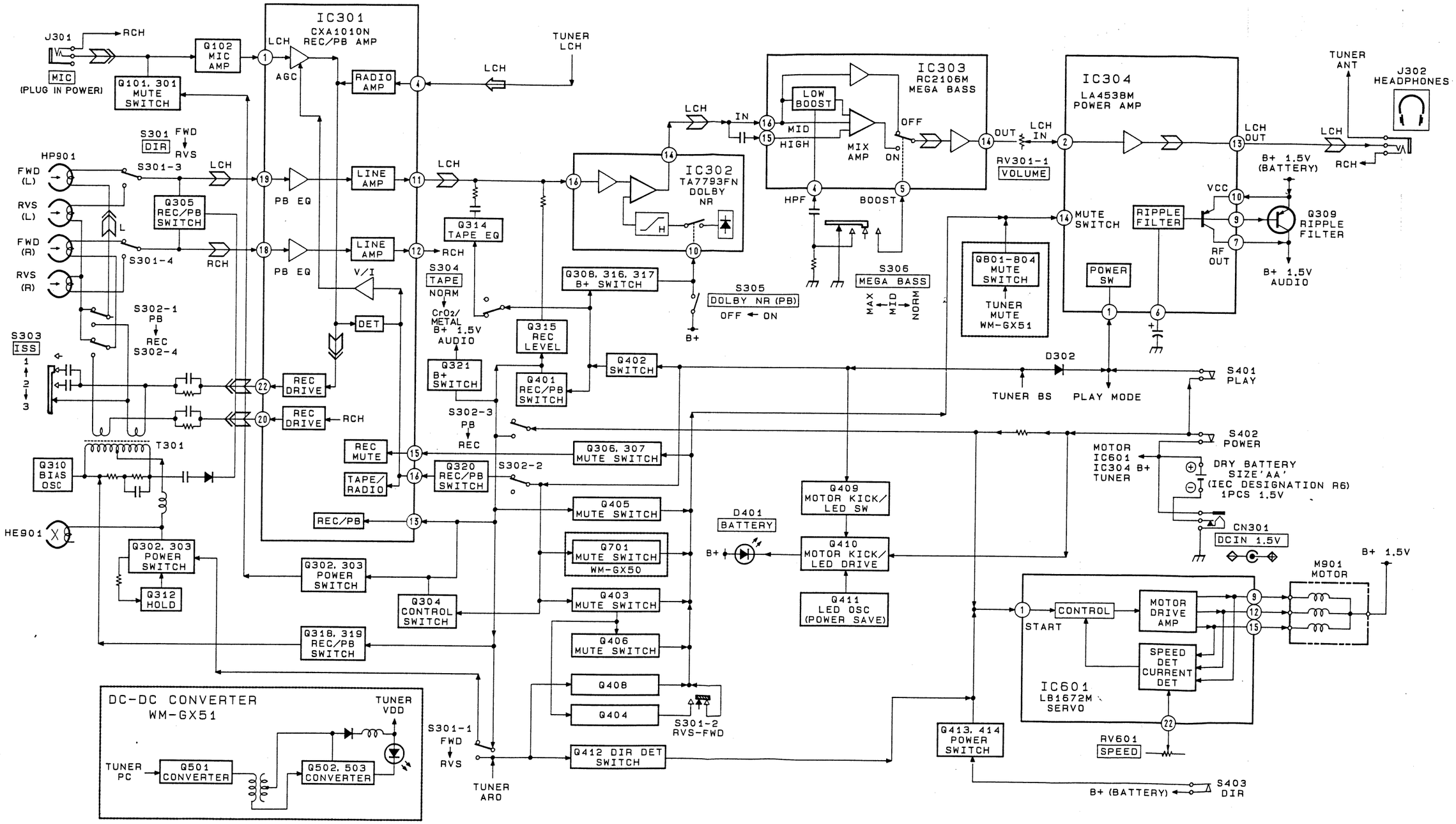

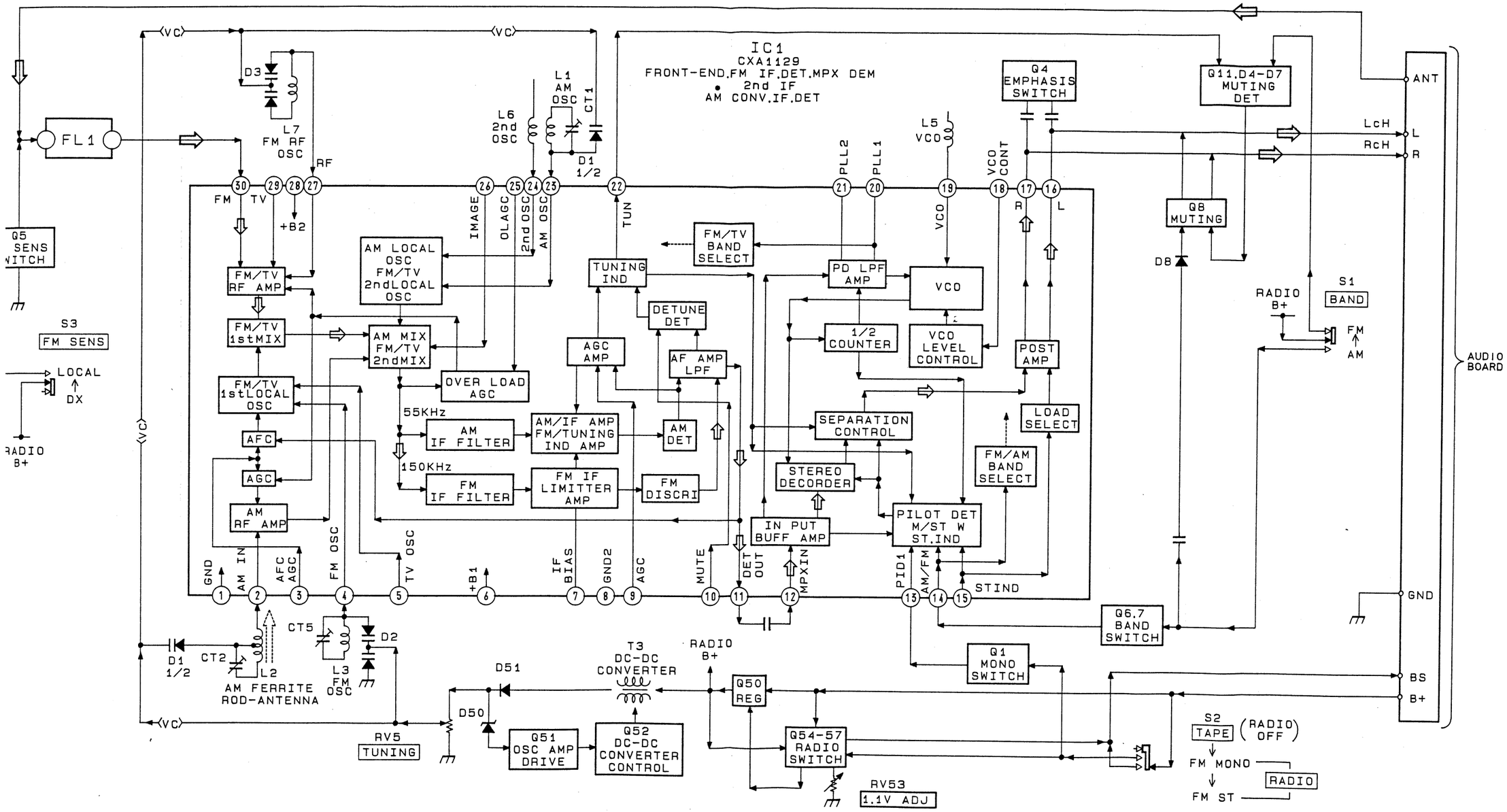
IC1
CXA1129
FRONT-END,FM IF,DET,MPX DEM
2nd IF
AM CONV.IF.DET
FL1
D3
L7
FM RF
OSC
L6
2nd
OSC
L1
AM
OSC
CT1
D1
1/2
L5
VCO
Q4
EMPHASIS
SWITCH
Q11,D4-D7
MUTING
DET
ANT
LcH
RcH
L
R
Q5
SENS
SWITCH
S3
FM SENS
LOCAL
DX
RADIO
B+
FM/TV
RF AMP
FM/TV
1stMIX
FM/TV
1stLOCAL
OSC
AFC
AGC
AM
RF AMP
AM LOCAL
OSC
FM/TV
2ndLOCAL
OSC
AM MIX
FM/TV
2ndMIX
OVER LOAD
AGC
55KHz
AM
IF FILTER
150KHz
FM
IF FILTER
AM/IF AMP
FM/TUNING
IND AMP
FM IF
LIMITTER
AMP
AM
DET
FM
DISCRI
TUNING
IND
DETUNE
DET
AGC
AMP
AF AMP
LPF
FM/TV
BAND
SELECT
PD LPF
AMP
VCO
1/2
COUNTER
VCO
LEVEL
CONTROL
POST
AMP
SEPARATION
CONTROL
STEREO
DECORDER
IN PUT
BUFF AMP
PILOT DET
M/ST W
ST.IND
LOAD
SELECT
FM/AM
BAND
SELECT
Q8
MUTING
D8
RADIO
B+
S1
BAND
FM
AM
AUDIO
BOARD
GND
BS
B+
Q6,7
BAND
SWITCH
Q1
MONO
SWITCH
FM
TV
+B2
IMAGE
OLAGC
2nd OSC
AM OSC
TUN
PLL2
PLL1
VCO
VCO
CONT
R
L
GND
AM IN
AFC
AGC
FM OSC
TV OSC
+B1
IF
BIAS
GND2
AGC
MUTE
DET
OUT
MPXIN
PID1
AM/FM
STIND
CT5
D2
L3
FM
OSC
D1
1/2
CT2
L2
AM FERRITE
ROD-ANTENNA
RV5
TUNING
D51
D50
T3
DC-DC
CONVERTER
RADIO
B+
Q50
REG
Q51
OSC AMP
DRIVE
Q52
DC-DC
CONVERTER
CONTROL
Q54-57
RADIO
SWITCH
RV53
1.1V ADJ
S2
TAPE
(RADIO
OFF)
FM MONO
FM ST
RADIO
(VCD)
FM/VHF
SEG1-SEG16
10-1-53-48
LCD
LIQUID CRYST

BLOCK DIAGRAM (TUNER SECTION WM-GX51)

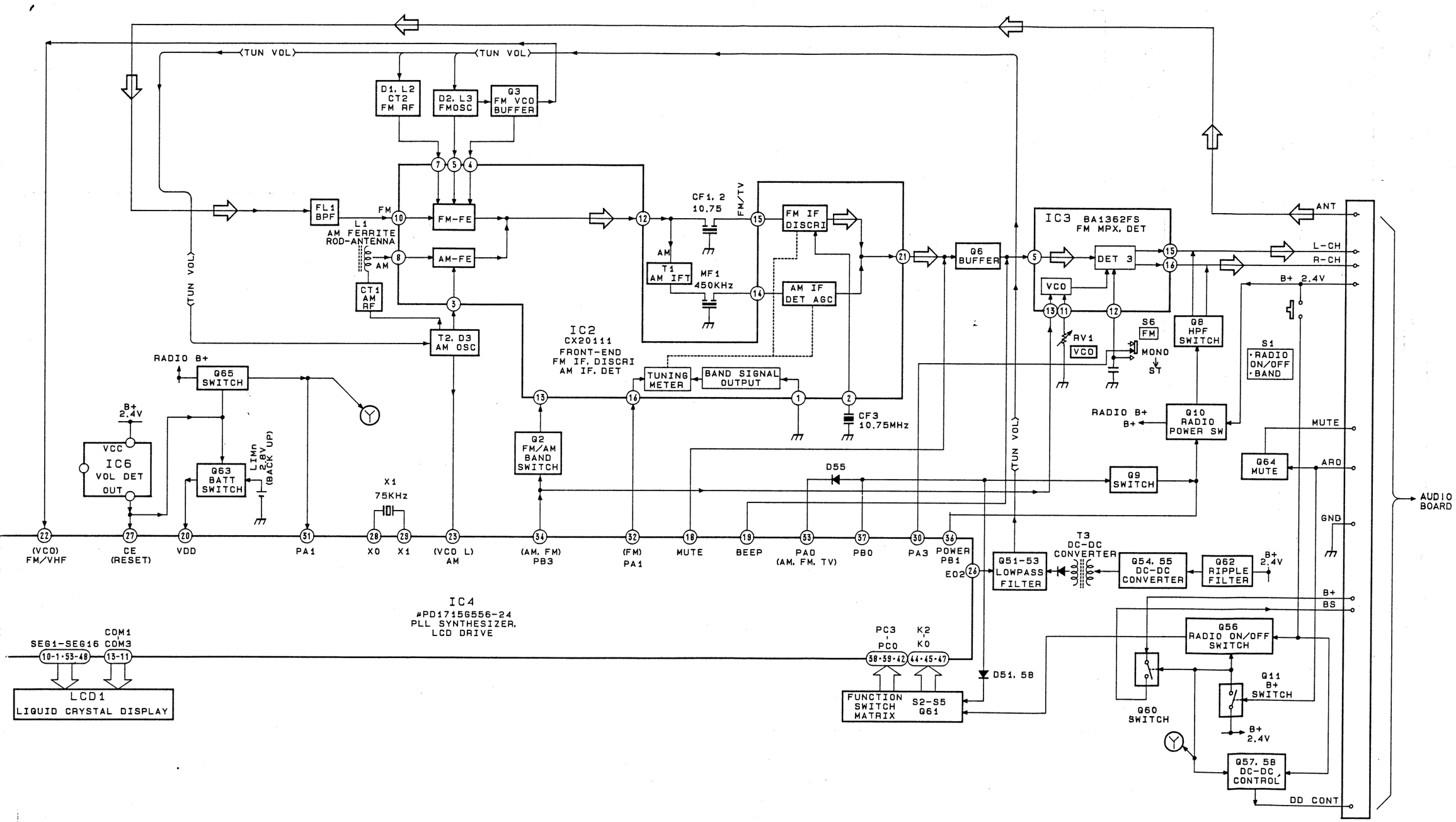

• SEMICONDUCTOR LEAD LAYOUTS

BA1362FS
RC2106M
TA7793FN

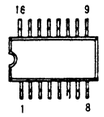

(TOP VIEW)

CXA1010N
CX20111
LB1672M

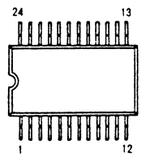

(TOP VIEW)

CXA1129N

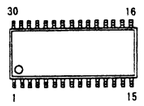

(TOP VIEW)

LA4538M

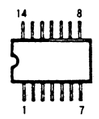

(TOP VIEW)

S8051HN-CD-S

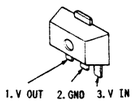

μPD1715G-581-24

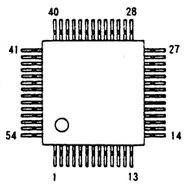

UN5210-Q

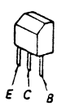

XN4215

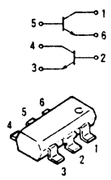

XN4315
XN4608

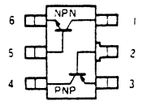

XN5501

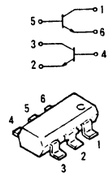

XN8081

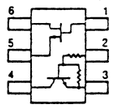

MA110
MA729
1SS355

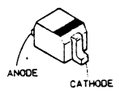

MA728

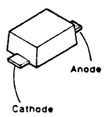

1SS26

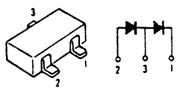

GL-2PR90

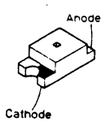

CL-70G-CD

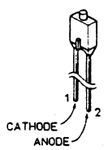

• Semiconductor Location

Ref. No	Location
D302	G-6
D303	D-15
D304	D-15
D305	D-16
D401	G-2
IC301	C-18
IC302	E-18
IC303	G-17
IC304	G-19
IC601	F-21
Q101	C-21
Q102	C-22
Q201	C-21
Q202	C-22
Q301	C-21
Q302	C-21
Q303	C-22
Q304	C-22
Q305	C-19
Q306	D-19
Q307	D-19
Q308	E-7
Q309	H-19
Q310	E-15
Q311	F-16
Q312	F-15
Q313	F-16
Q314	D-7
Q315	D-7
Q316	E-7
Q317	E-8
Q318	E-16
Q319	F-9
Q320	F-8
Q321	D-7
Q401	E-6
Q402	E-7
Q403	F-7
Q404	F-6
Q405	F-7
Q406	F-7
Q408	F-6
Q409	G-22
Q410	H-22
Q411	H-22
Q412	F-21
Q413	F-21
Q414	G-4
Q701 (GX50)	F-7
Q801 (GX51)	F-8
Q802 (GX51)	F-6
Q803 (GX51)	F-6
Q804 (GX51)	F-6

4-2. PRINTED WIRING BOARDS (AUDIO SECTION)

Note:
- ■ : parts mounted on the conductor side.
- ● : Through hole.
- ▒ : Pattern on the side which is seen.
- ▒ : Pattern of the rear side.

【AUDIO BOARD】
-Side B-

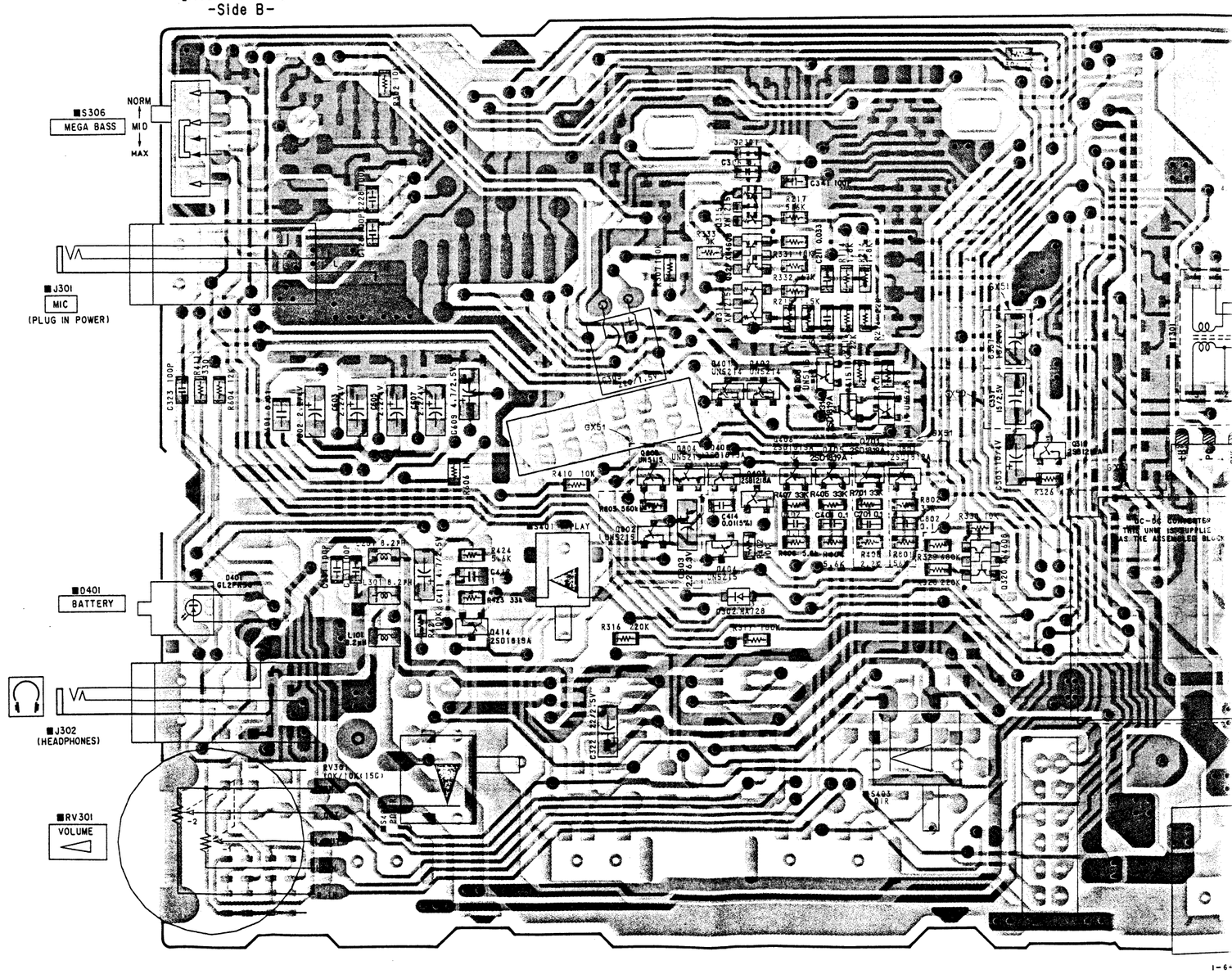

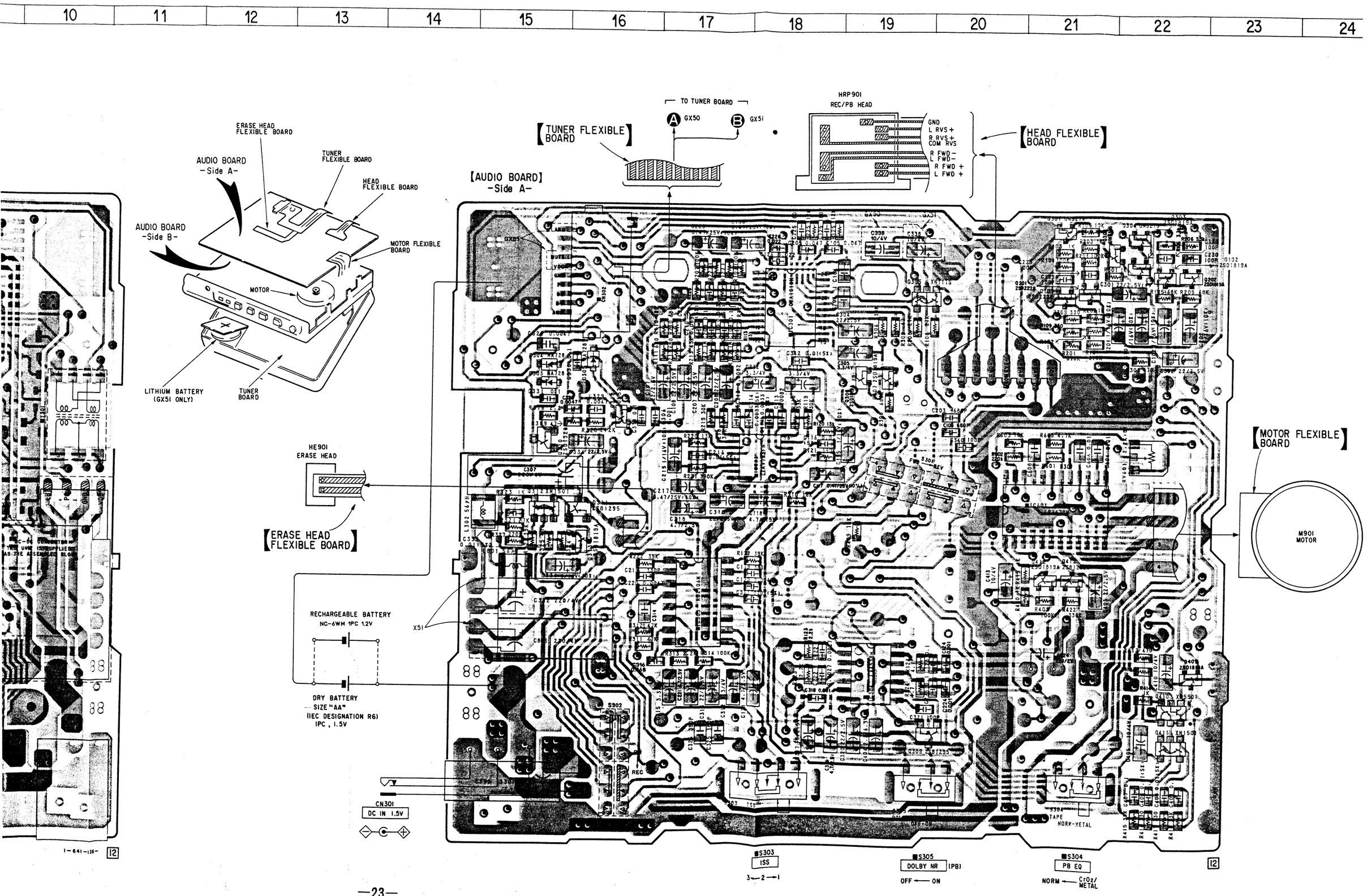
10
11
12
13
14
15
16
17
18
19
20
21
22
23
24
ERASE HEAD FLEXIBLE BOARD
AUDIO BOARD -Side A-
TUNER FLEXIBLE BOARD
HEAD FLEXIBLE BOARD
AUDIO BOARD -Side B-
MOTOR FLEXIBLE BOARD
MOTOR
LITHIUM BATTERY (GX51 ONLY)
TUNER BOARD
TO TUNER BOARD
GX50
GX51
【TUNER FLEXIBLE BOARD】
HRP901
REC/PB HEAD
GND
L RVS +
R RVS +
COM RVS
R FWD −
L FWD −
R FWD +
L FWD +
【HEAD FLEXIBLE BOARD】
【AUDIO BOARD】 -Side A-
【MOTOR FLEXIBLE BOARD】
M901 MOTOR
HE901 ERASE HEAD
【ERASE HEAD FLEXIBLE BOARD】
RECHARGEABLE BATTERY NC-6WM 1PC 1.2V
DRY BATTERY SIZE "AA" (IEC DESIGNATION R6) 1PC , 1.5V
X51
CN301 DC IN 1.5V
S302
REC
S303 ISS 3—2—1
S305 DOLBY NR (PB) OFF — ON
S304 PB EQ NORM — CrO2/METAL
TAPE NORM-METAL
1-641-136-
12
12

• IC BLOCK DIAGRAMS

IC302 TA7793FN

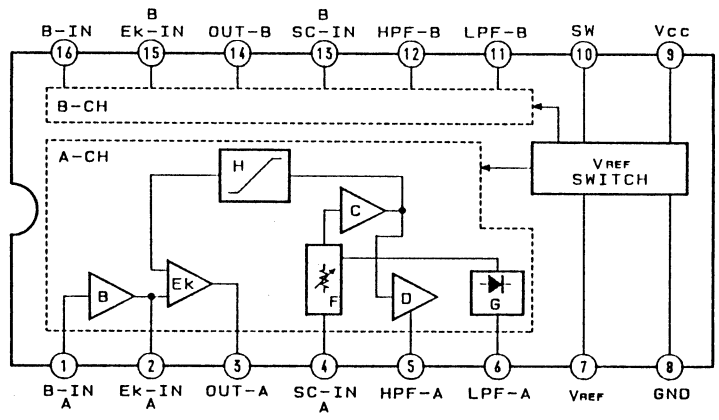

IC303 RC2106M

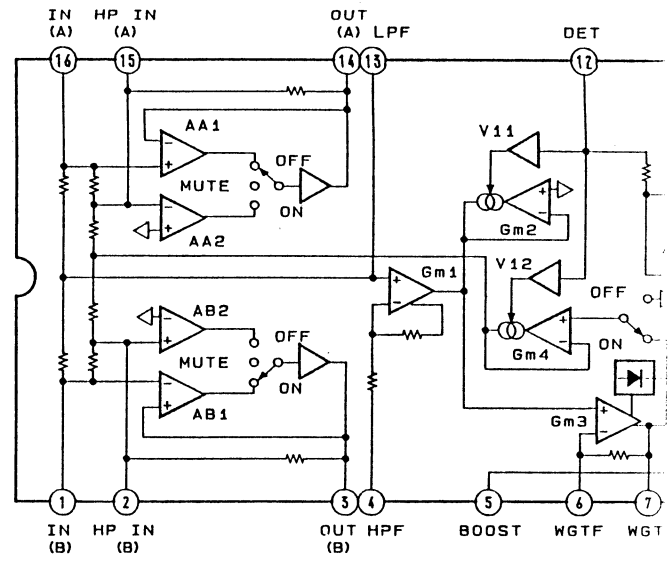

4-3. SCHEMATIC DIAGRAM (AUDIO SECTION)

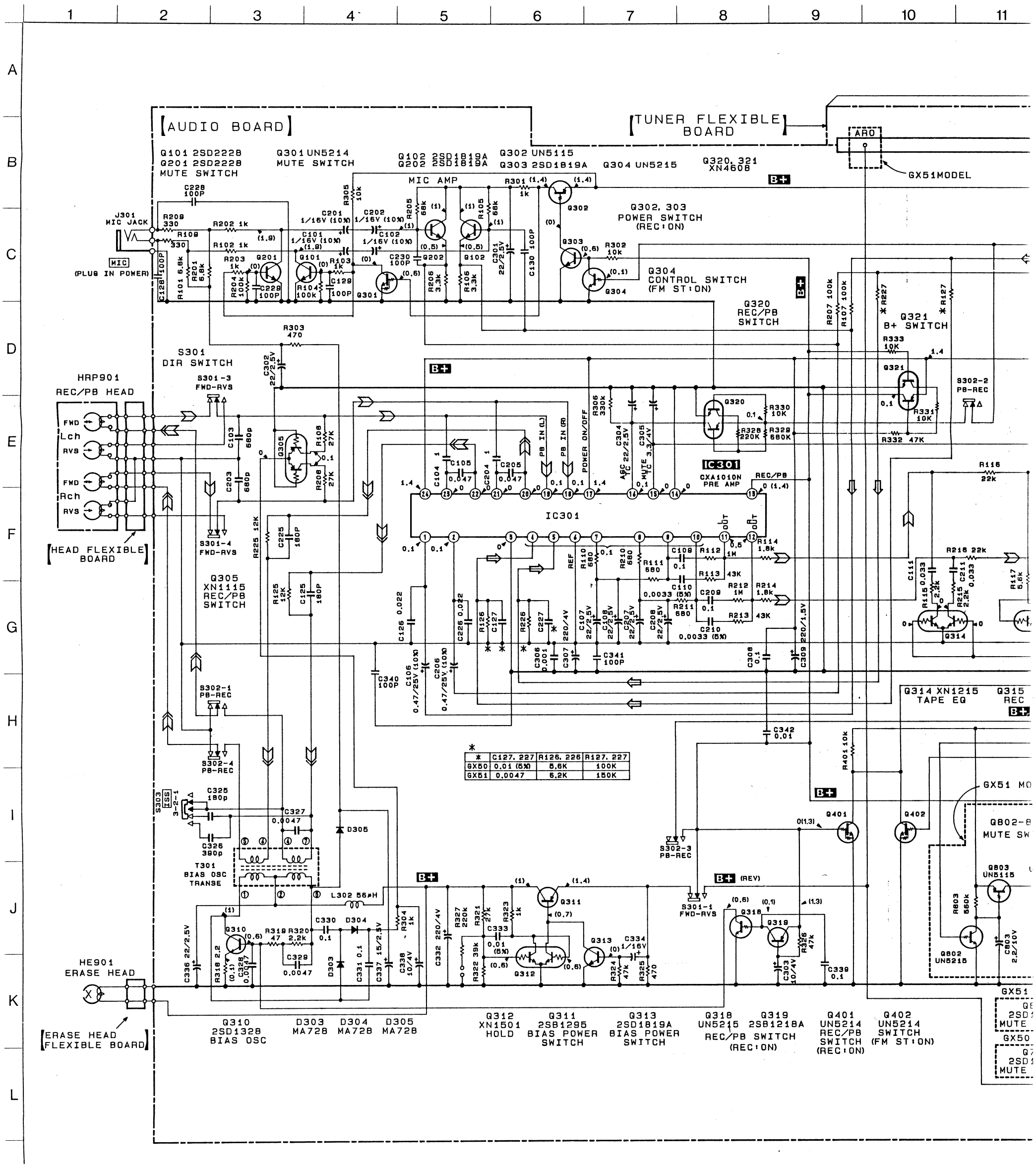

*	C127, 227	R126, 226	R127, 227
GX50	0.01 (5%)	8.6K	100K
GX51	0.0047	6.2K	150K

IC303 RC2106M

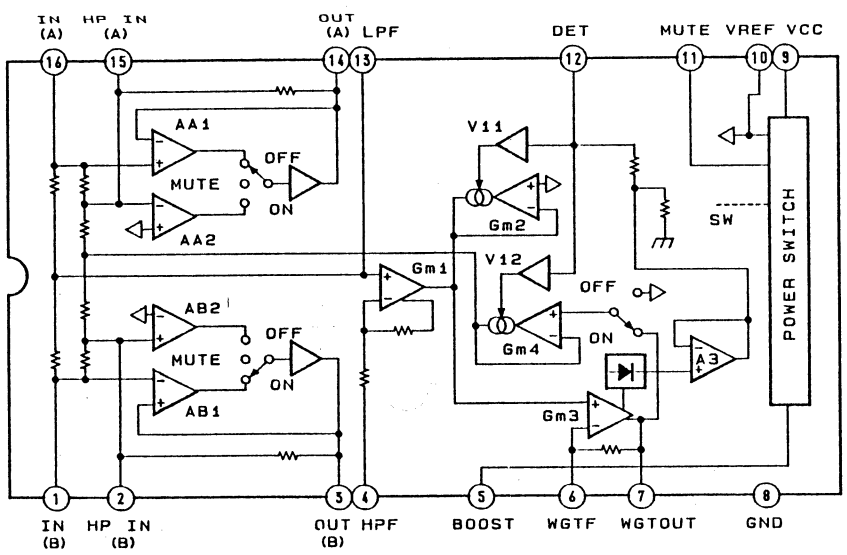

IC304 LA4538M

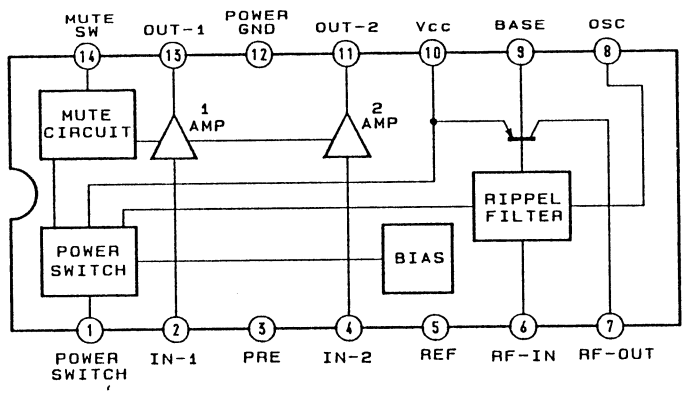

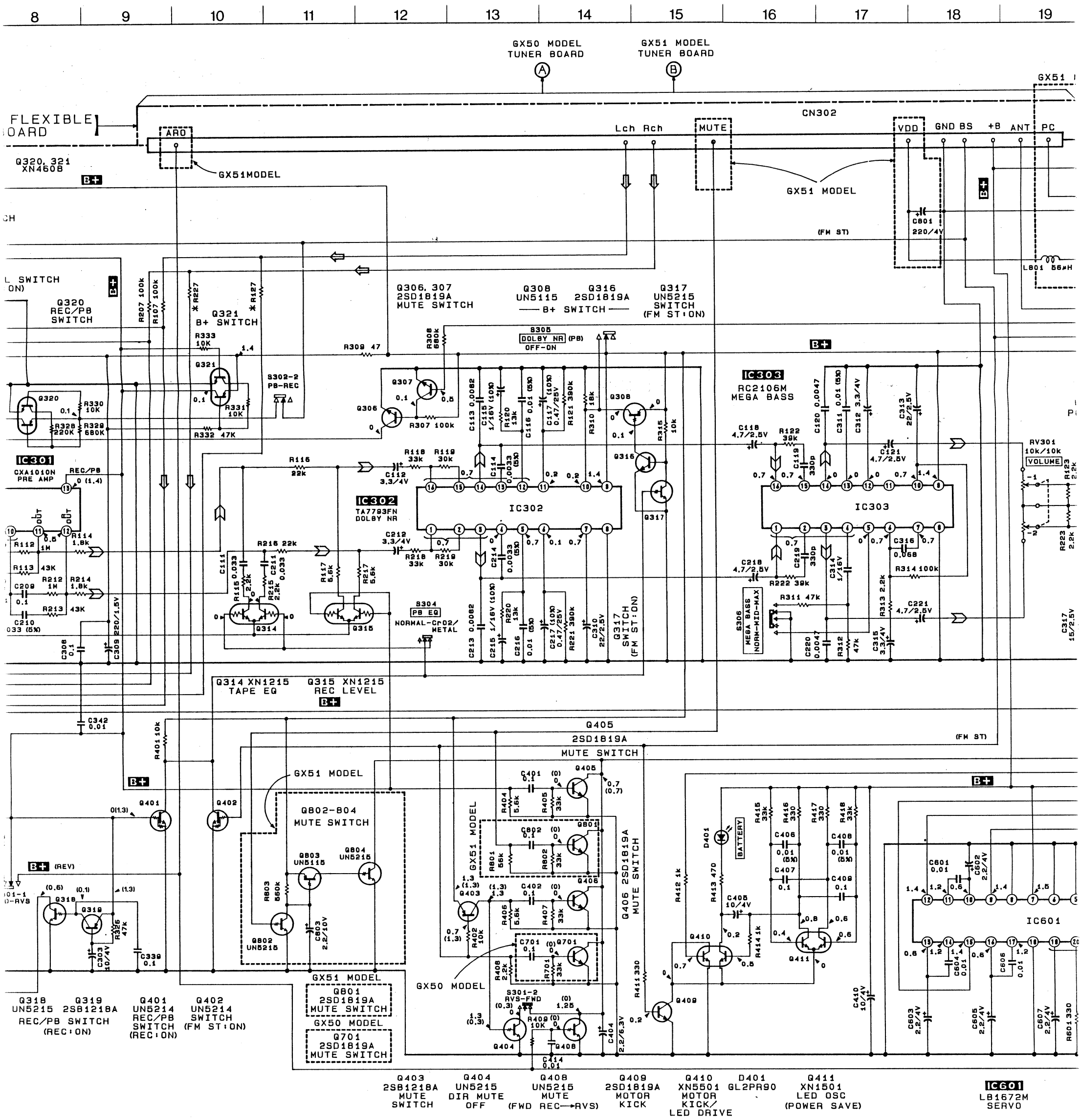

IC601 LB1672M

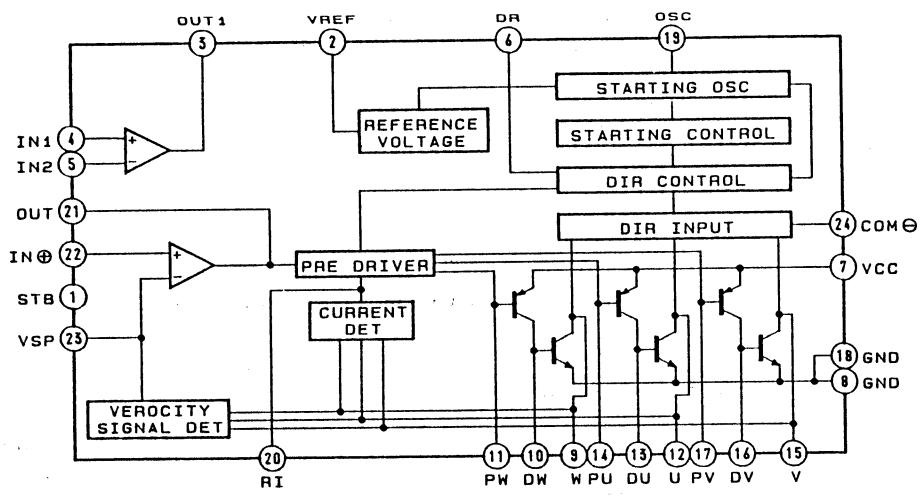

IC301 CXA1010N

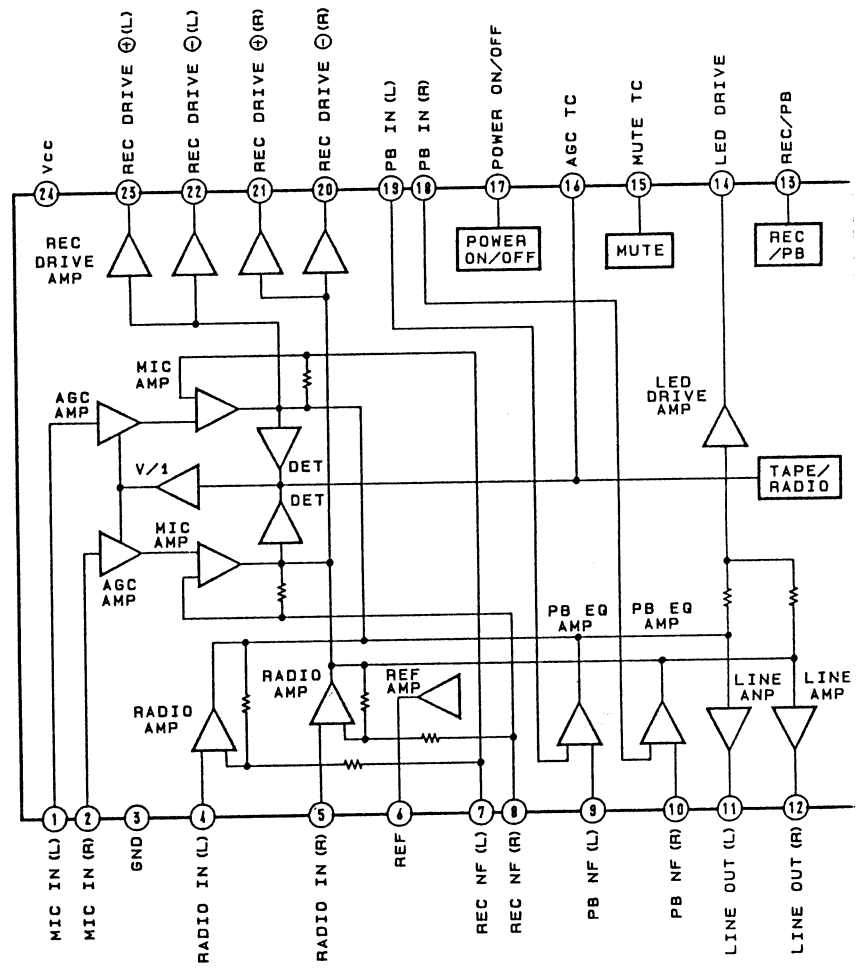

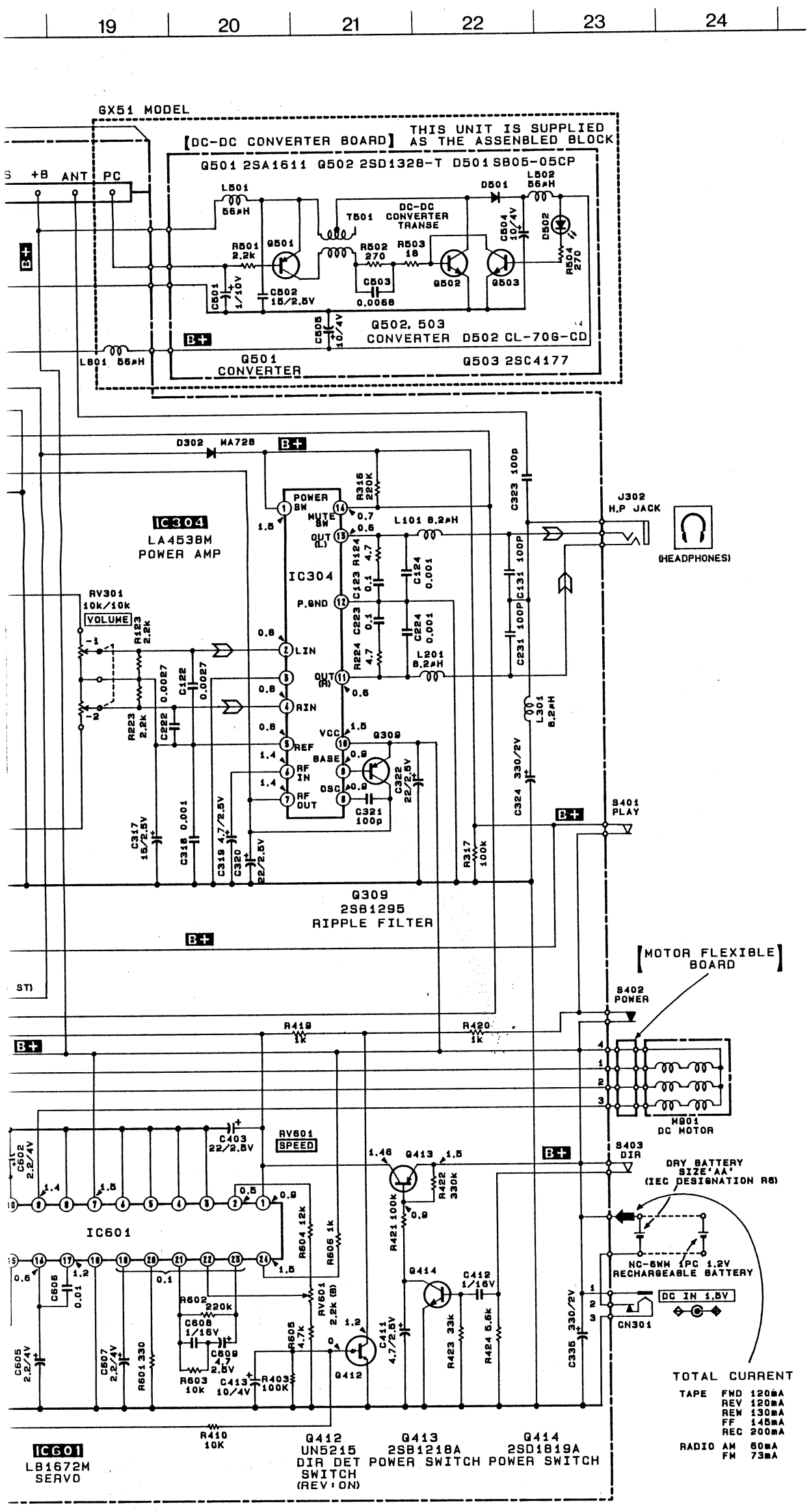

Note:

- All capacitors are in μF unless otherwise noted. pF: μμF 50WV or less are not indicated except for electrolytics and tantalums.
- All resistors are in Ω and ¼W or less unless otherwise specified.
- Switch with sliding contact indicated by hatched lines shows shorting type.

- B+ : B+ line.
- ▭ : adjustment for repair.
- Total current is measured with no cassette installed.
- Power voltage is dc 1.5V and fed with reglated dc power supply from external power voltage jack.
- Voltage and waveforms are dc with respect to ground under no-signal (detuned) conditions.

  no mark : FWD
  ( ) : REC
- Voltages are taken with a VOM. (Input impedance 10MΩ) Voltage variations may be noted due to normal production tolerances.
- Signal path.
  ⇨ : FM
  Σ : PB
  Σ» : REC

4-4. SCHEMATIC DIAGRAM (TUNER SECTION WM-GX51)

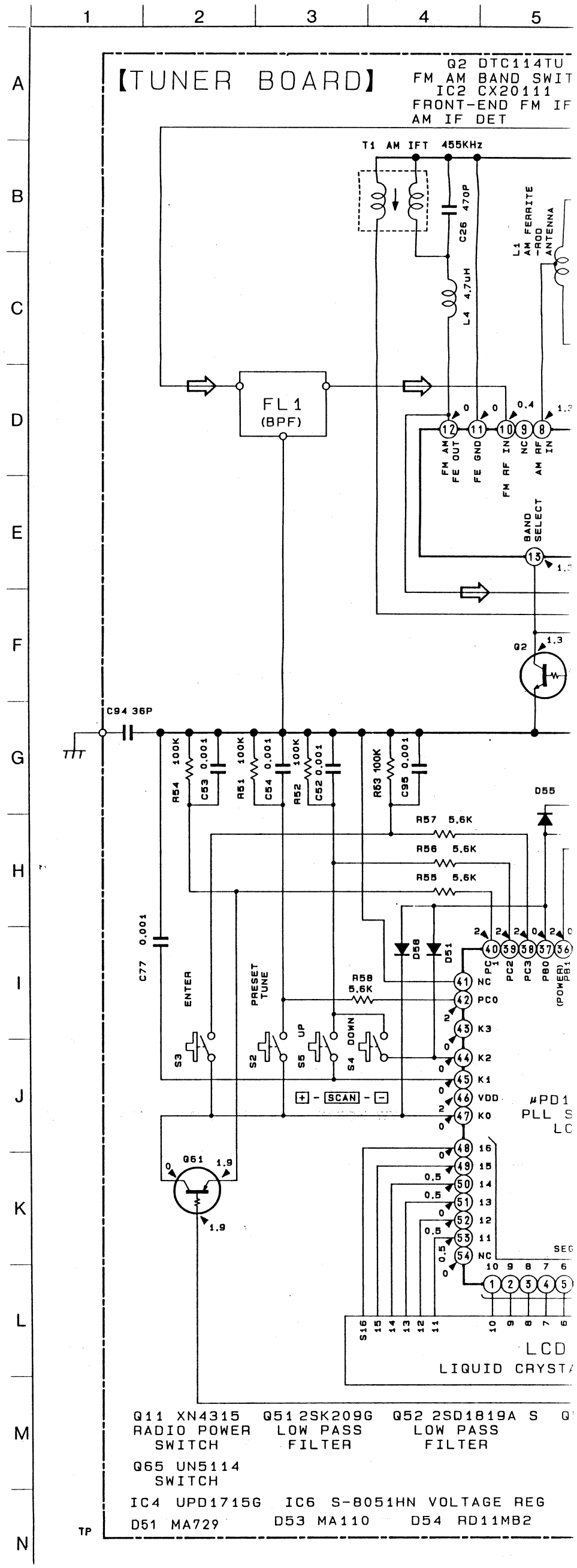

- **IC BLOCK DIAGRAMS**

IC2 CX20111

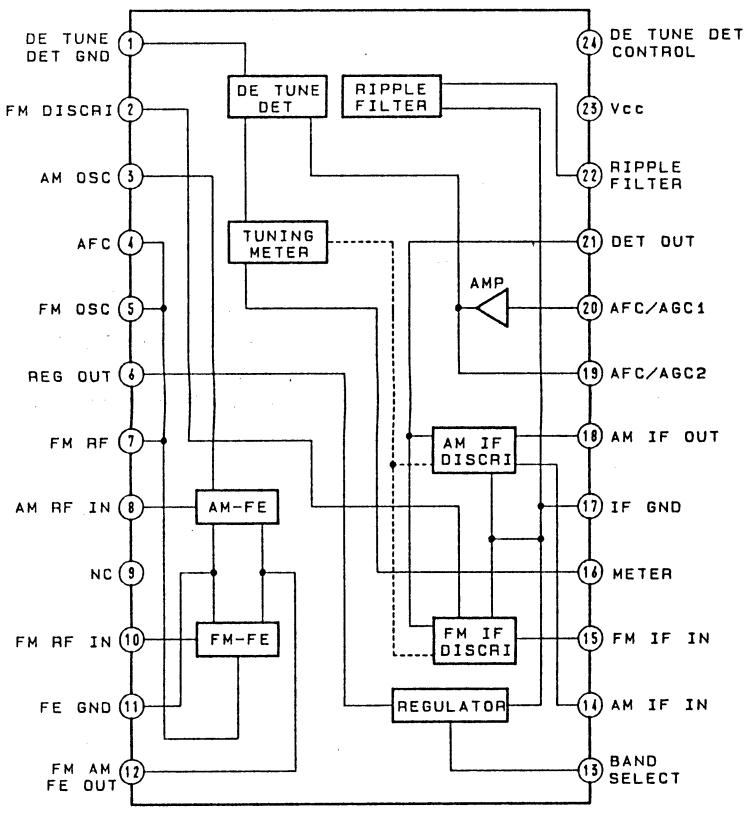

IC3 BA1362FS

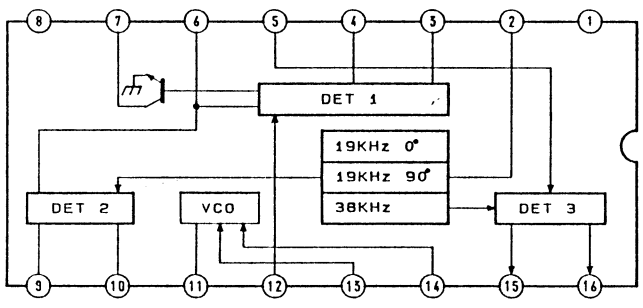

Note:

- All capacitors are in μF unless otherwise noted. pF: μμF 50WV or less are not indicated except for electrolytics and tantalums.
- All resistors are in Ω and 1/4W or less unless otherwise specified.
- B+ : B+ line.
- ▭ : adjustment for repair.
- Total current is measured with no cassette installed.
- Power voltage is dc 1.5V and fed with reglated dc power supply from external power voltage jack.
- Voltage and waveforms are dc with respect to ground under no-signal (detuned) conditions.

  no mark : FM
- Voltages are taken with a VOM. (Input impedance 10MΩ) Voltage variations may be noted due to normal production tolerances.
- Signal path.

  ⇨ : FM

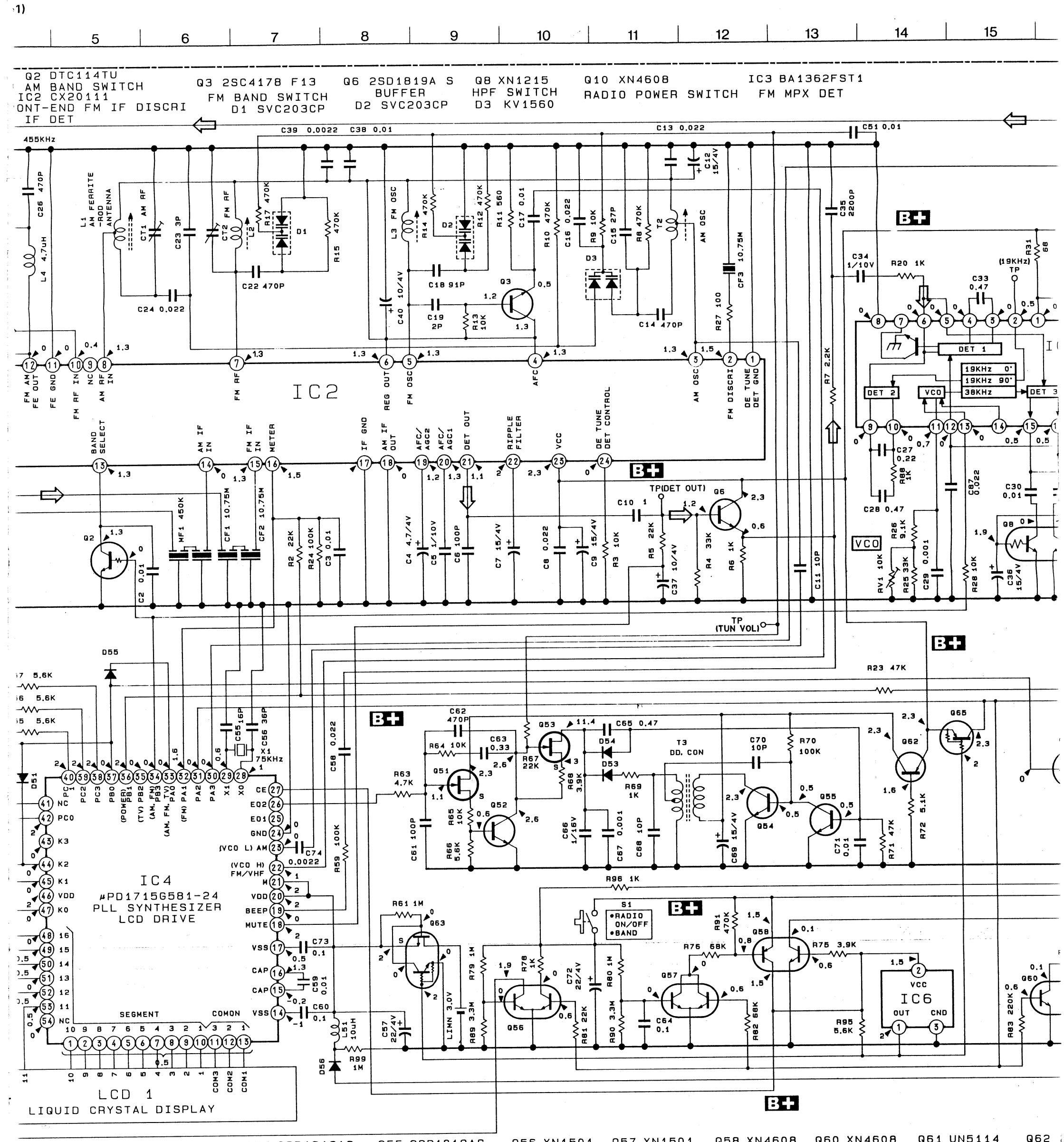
Q2 DTC114TU
AM BAND SWITCH
IC2 CX20111
ONT-END FM IF DISCRI
IF DET
Q3 2SC4178 F13
FM BAND SWITCH
D1 SVC203CP
Q6 2SD1819A S
BUFFER
D2 SVC203CP
Q8 XN1215
HPF SWITCH
D3 KV1560
Q10 XN4608
RADIO POWER SWITCH
IC3 BA1362FST1
FM MPX DET
455KHz
IC2
IC4
μPD1715G581-24
PLL SYNTHESIZER
LCD DRIVE
LCD 1
LIQUID CRYSTAL DISPLAY
TP(DET OUT)
TP
(TUN VOL)
VCO
DET 1
DET 2
DET 3
19KHz 0°
19KHz 90°
38KHz
S1
•RADIO
ON/OFF
•BAND
IC6
VCC
OUT
GND
B+
2SD1819A S
OW PASS
FILTER
Q53 2SK209G
LOW PASS
FILTER
Q54 2SD1819AS
DC DC
CONVERTER
Q55 2SD1819AS
DC DC
CONVERTER
Q56 XN1501
RADIO ON OFF
SWITCH
Q57 XN1501
SWITCH
Q58 XN4608
RADIO
SWITCH
Q60 XN4608
SWITCH
Q61 UN5114
CONTROL
SWITCH
Q62
D55 MA729
D56 SB05-05
D58 MA729
VOLTAGE REG
54 RD11MB2

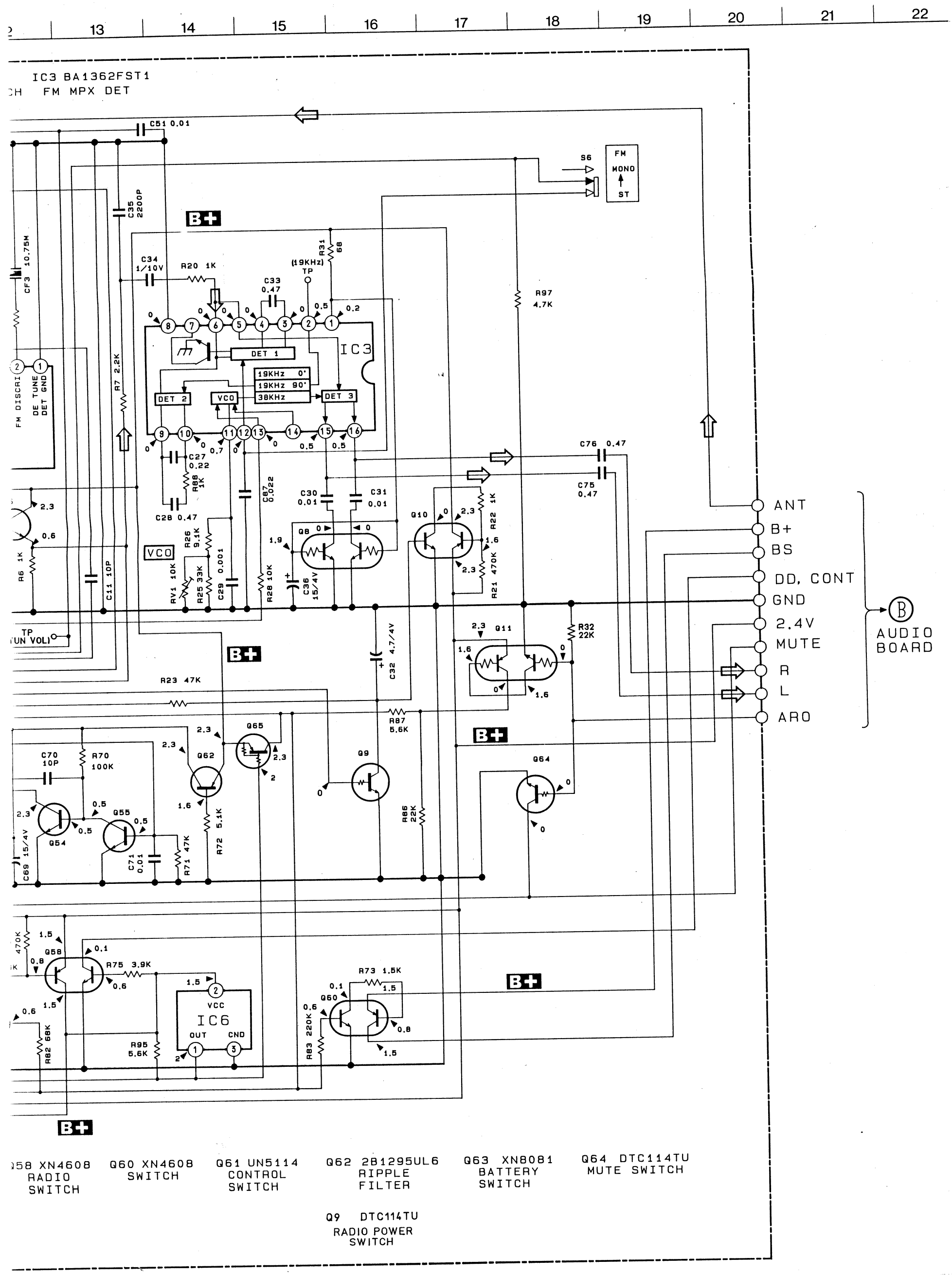
IC3 BA1362FST1
FM MPX DET
IC3
DET 1
DET 2
DET 3
VCO
19KHz 0°
19KHz 90°
38KHz
IC6
VCC
OUT
GND
S6
FM
MONO
ST
ANT
B+
BS
DD, CONT
GND
2.4V
MUTE
R
L
ARO
AUDIO BOARD
Q58 XN4608 RADIO SWITCH
Q60 XN4608 SWITCH
Q61 UN5114 CONTROL SWITCH
Q62 2B1295UL6 RIPPLE FILTER
Q63 XN8081 BATTERY SWITCH
Q64 DTC114TU MUTE SWITCH
Q9 DTC114TU RADIO POWER SWITCH

4-5. PRINTED WIRING BOARDS (TUNER SECTION WM-GX51)

- **Semiconductor Location**

Ref. No	Location
D1	F-8
D2	G-9
D3	H-8
D51	D-1
D53	F-5
D54	E-5
D55	E-2
D56	D-5
D58	C-1
IC2	F-7
IC3	G-4
IC4	D-3
IC6	E-4
Q2	E-6
Q3	G-8
Q6	G-6
Q8	H-4
Q9	D-6
Q10	D-6
Q11	E-1
Q51	E-4
Q52	E-5
Q53	F-5
Q54	F-4
Q55	E-4
Q56	B-11
Q57	B-10
Q58	B-11
Q60	B-10
Q61	A-10
Q62	E-4
Q63	E-3
Q64	B-10
Q65	E-3

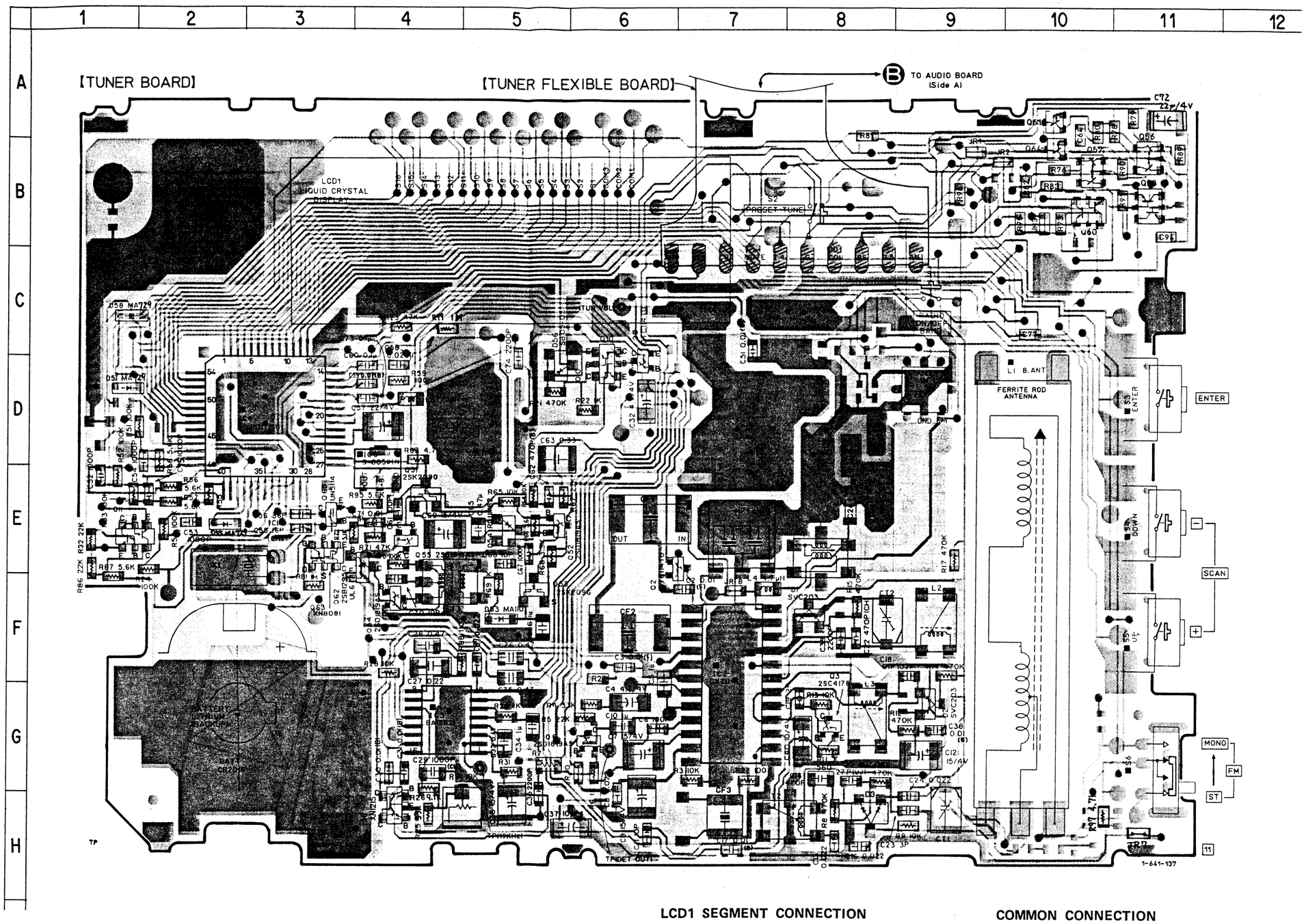

LCD1 SEGMENT CONNECTION

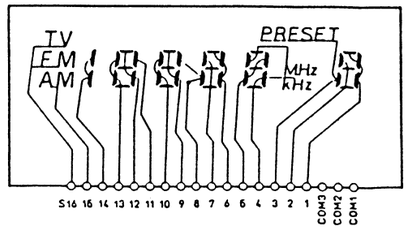

COMMON CONNECTION

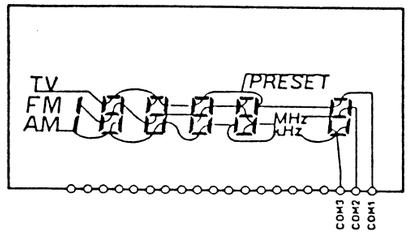

Note:

- ■ : parts mounted on the conductor side.
- ● : Through hole.
- ▒ : Pattern on the side which is seen.
- ▒ : Pattern of the rear side.

4-6. PRINTED WIRING BOARDS (TUNER SECTION WM-GX50)

- **Semiconductor Location**

Ref. No	Location
D1	F-7
D2	E-6
D3	G-5
D4	F-1
D5	F-1
D6	F-2
D7	G-2
D8	E-2
D9	B-6
D50	C-2
D51	C-2
D52	C-6
IC1	F-4
Q1	E-3
Q4	F-3
Q5	B-5
Q6	F-2
Q7	F-2
Q8	E-2
Q11	G-1
Q50	C-4
Q51	D-2
Q52	D-2
Q54	C-5
Q55	C-5
Q56	C-4
Q57	C-6

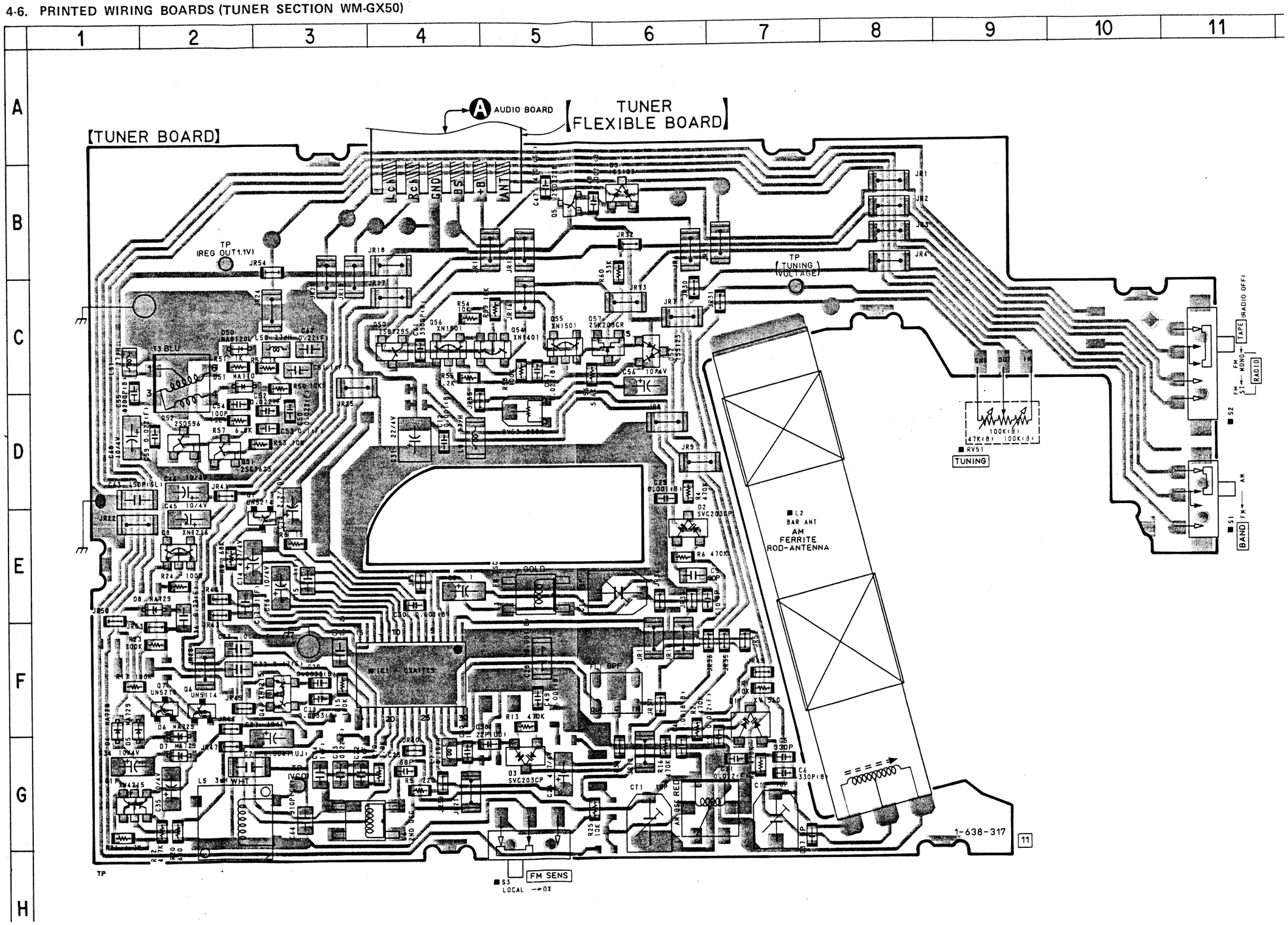

Note:

- ■ : parts mounted on the conductor side.
- ▒ : Pattern on the side which is seen.

4-7. SCHEMATIC DIAGRAM (TUNER SECTION WM-GX50)

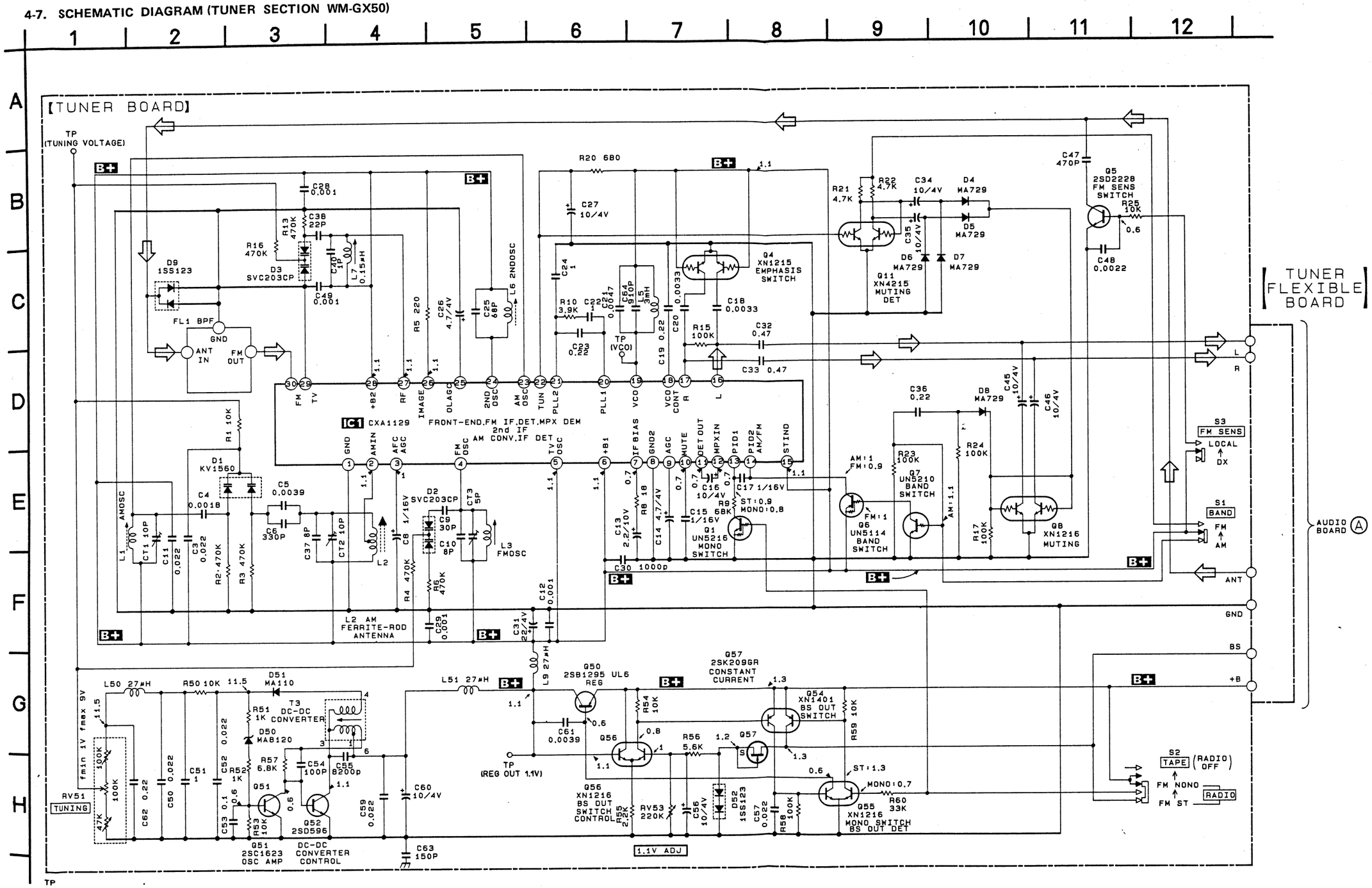

Note:

- All capacitors are in μF unless otherwise noted. pF: μμF 50WV or less are not indicated except for electrolytics and tantalums.
- All resistors are in Ω and ¼W or less unless otherwise specified.
- B+ : B+ line.
- ▭ : adjustment for repair.
- Total current is measured with no cassette installed.
- Power voltage is dc 1V and fed with reglated dc power supply from external power voltage jack.
- Voltage and waveforms are dc with respect to ground under no-signal (detuned) conditions.

  no mark : FM
- Voltages are taken with a VOM. (Input impedance 10MΩ) Voltage variations may be noted due to normal production tolerances.
- Signal path.

  ⇨ : FM

SECTION 5 EXPLODED VIEWS

NOTE:

- –XX, –X mean standardized parts, so they may have some differences from the original one.
- Color Indication of Appearance Parts
  Example:
  KNOB, BALANCE (WHITE) ... (RED)
  ↑ Parts color ↑ Cabinet's color
- Items marked "*" are not stocked since they are seldom required for routine service. Some delay should be anticipated when ordering these items.
- The mechanical parts with no reference number in the exploded views are not supplied.
- Hardware (# mark) list is given in the last of this parts list.
- Abbreviation
  IT: Italian model
  EA: Saudi Arabia model

5-1. CABINET SECTION-1

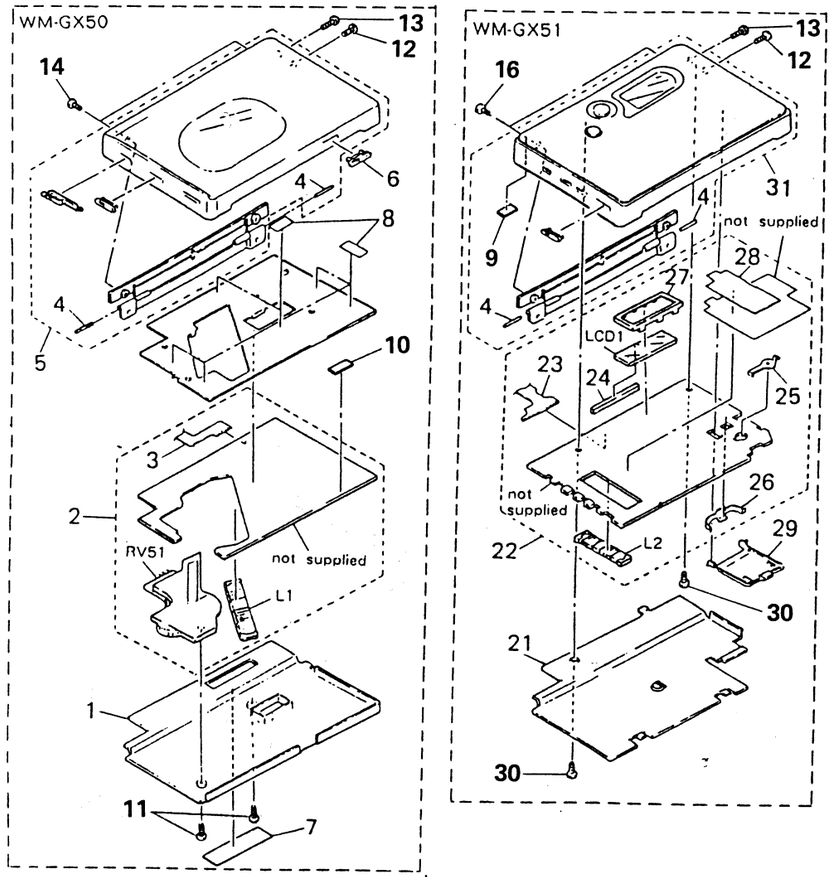

Ref. No.	Part No.	Description	Remark
1	3-373-589-01	COVER (GX50)	
2	A-3016-163-A	TUNER BOARD, COMPLETE (GX50:IT)	
2	A-3016-217-A	TUNER BOARD, COMPLETE (GX50:AEP, EA)	
3	1-641-662-11	TUNER FLEXIBLE, BOARD (GX50)	
4	7-626-308-61	SPRING-PIN 1.4X14	
5	X-3364-916-1	LID ASSY (B), CASSETTE (GX50:IT)	
5	X-3363-792-1	LID ASSY (B), CASSETTE (GX50:EXCEPT IT)	
6	3-367-791-01	KNOB (LOCAL/DX) (GX50)	
7	3-347-289-01	SHEET (COVER) (GX50)	
8	3-884-241-01	SHEET (C), ADHESIVE (GX50)	
9	9-911-863-XX	SHEET, INSULATING (GX51)	
10	3-375-057-01	COVER (PC BOARD) (GX50)	
11	3-704-197-31	SCREW (M1.4X3.0), LOCKING (GX50)	
12	3-704-197-53	SCREW (M1.4X3.5), LOCKING (GX50:AEP, EA, GX51)	
13	3-704-197-03	SCREW (M1.4X1.6), LOCKING	
14	3-704-245-52	SCREW (P1.4X3.5) (GX50)	
16	3-704-197-11	SCREW (1.4X2.0), LOCKING (GX51)	
21	3-354-439-01	COVER (GX51)	
22	A-3016-129-A	TUNER BOARD, COMPLETE (GX51)	
23	1-641-663-11	PC BOARD, FLEXIBLE (GX51)	
24	1-535-749-11	CONDUCTOR (CONNECTION) (GX51)	
25	3-372-596-01	TERMINAL BOARD (PLUS), BATTERY (GX50)	
26	3-372-595-01	TERMINAL BOARD (MINUS), BATTERY (GX50)	
* 27	3-350-956-01	CASE, SHIELD (GX51)	
* 28	3-354-452-01	PAPER (TUNER) SHIELD (GX51)	
29	3-373-602-01	LID (LITHIUM), BATTERY CASE (GX51)	
30	3-318-382-21	SCREW (1.7X3), TAPPING (GX51)	
31	X-3363-797-1	LID ASSY (B), CASSETTE (GX51)	
L1	1-402-282-11	ANTENNA, FERRITE-ROD (LW) (GX50)	
L2	1-402-553-11	ANTENNA, FERRITE-ROD (MW) (GX51)	
LCD1	1-808-578-11	DISPLAY PANEL, LIQUID CRYSTAL (GX51)	
RV51	1-241-414-11	TUNING BLOCK (GX50)	

5-2. CABINET SECTION-2

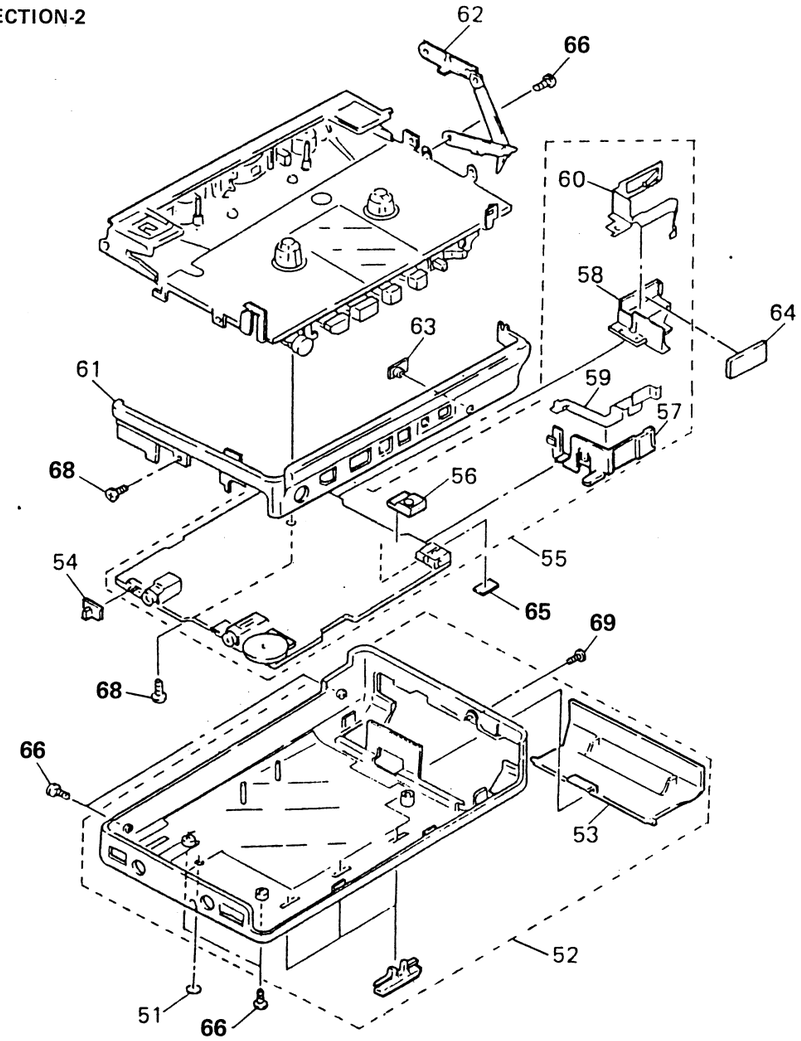

Ref. No.	Part No.	Description	Remark
51	3-342-380-01	SHEET, SPEED HOLE	
52	X-3363-791-1	CABINET (REAR) ASSY (B) (GX50)	
52	X-3363-795-1	CABINET (REAR) ASSY (B) (GX51)	
53	3-367-803-21	LID, BATTERY CASE (B)	
54	3-348-186-01	KNOB (DBB)	
55	A-3016-127-A	AUDIO BOARD, COMPLETE (GX51)	
55	A-3016-130-A	AUDIO BOARD, COMPLETE (GX50)	
56	A-3016-128-A	DDC BOARD, COMPLETE (GX51)	
57	3-354-441-01	HOLDER (A), TERMINAL	
58	3-354-442-01	HOLDER (B), TERMINAL	
59	3-373-582-01	TERMINAL, PLUS	
60	3-352-048-01	TERMINAL BOARD, MINUS	
61	3-373-590-01	ORNAMENT, REEL	
62	X-3352-013-1	ARM ASSY, CLICK	
* 63	3-368-117-01	SPACER	
64	9-911-838-XX	CUSHION (B), RUBBER (GX51)	
65	3-831-441-11	CUSHION (B)	
66	3-704-245-52	SCREW (P1.4X3.5)	
68	3-704-197-11	SCREW (M1.4X2.0), LOCKING	
69	3-704-245-12	SCREW (P1.4X2.0)	

5-3. MECHANISM SECTION-1 (MF-WMBF608)

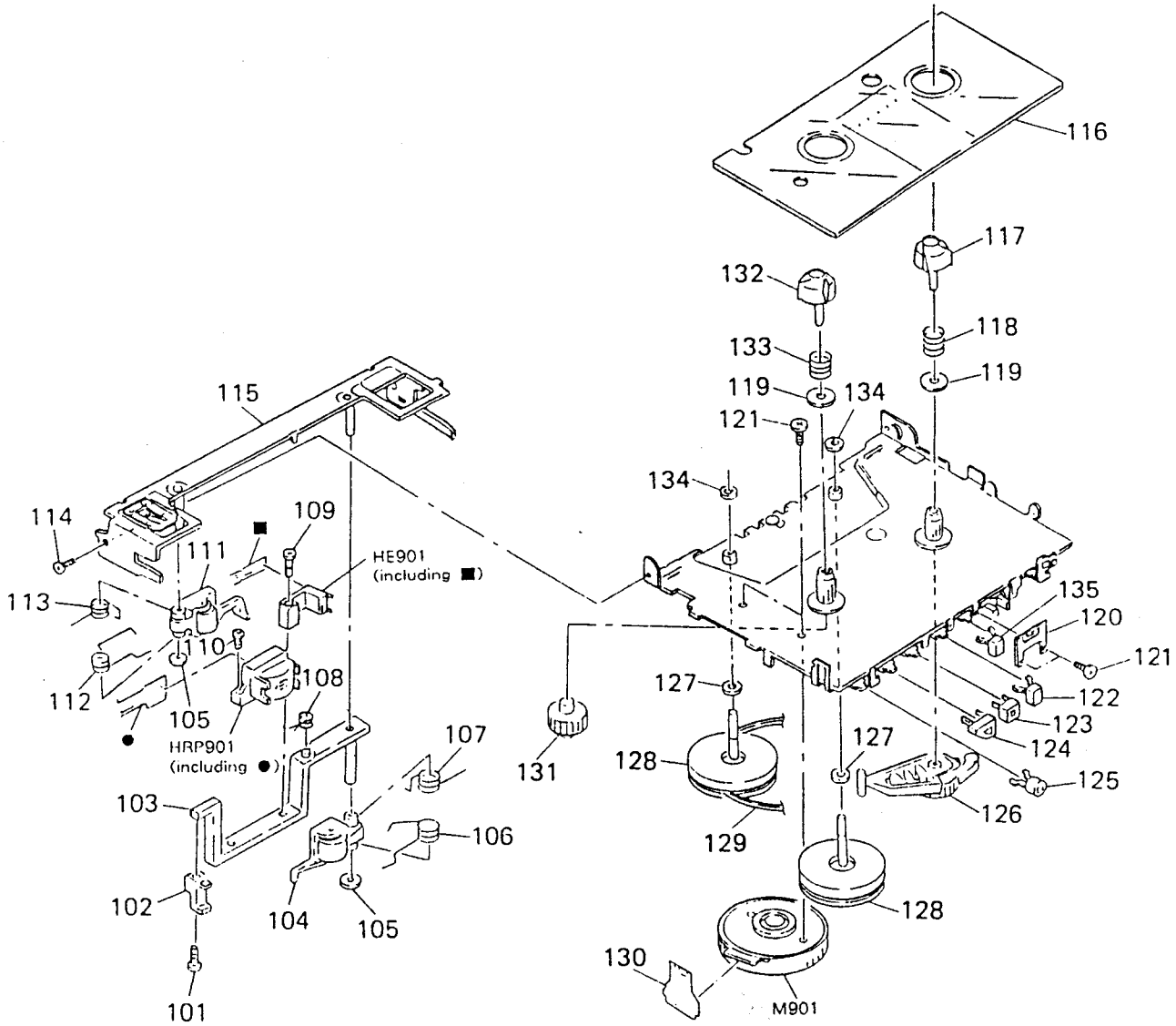

Ref. No.	Part No.	Description	Remark
101	3-348-998-31	SCREW (M1.4X2.5), TAPPING, PAN	
102	3-344-694-01	GUIDE (RIGHT)	
103	3-395-537-01	LEVER (AZ), HEAD	
104	X-3395-509-1	PINCH LEVER (R) ASSY	
105	3-341-473-01	WASHER (MP)	
106	3-348-971-01	SPRING (PINCH N)	
107	3-341-468-01	SPRING (R)	
108	3-347-205-01	SPRING (HD LEVER), TORSION	
109	3-349-890-01	SCREW, TAPPING	
110	3-348-998-71	SCREW (M1.4X4.5), TAPPING	
111	X-3331-036-1	PINCH LEVER (N) ASSY	
112	3-395-536-01	SPRING (PINCH R), TORSION	
113	3-341-469-01	SPRING (N) .	
114	3-352-005-01	SCREW (M1.4X1.6), PRECISION STEP	
115	X-3352-010-1	HOLDER (T.X) ASSY	
116	3-354-467-01	COVER, MD	
117	3-348-149-01	REEL, SUPPLY	
118	3-348-107-01	SPRING, COMPRESSION	
119	3-365-356-01	WASHER	

Ref. No.	Part No.	Description	Remark
120	3-395-543-01	SPRING	
121	3-349-825-01	SCREW	
122	3-367-360-01	BUTTON (FF)	
123	3-367-363-01	BUTTON (STOP)	
124	3-367-361-01	BUTTON (FWD)	
125	3-373-581-01	BUTTON (REC)	
126	X-3348-110-1	LEVER ASSY, PICK UP	
127	3-354-407-01	WASHER	
128	X-3352-007-1	WHEEL (X) ASSY, CAPSTAN	
129	3-349-814-01	BELT	
130	1-638-313-11	PC BOARD, MOTOR FLEXIBLE	
131	3-348-151-01	GEAR (TAKE-UP REEL)	
132	3-348-150-01	REEL, TAKE-UP	
133	3-348-989-01	SPRING, COMPRESSION	
134	3-331-007-21	WASHER	
135	3-367-362-01	BUTTON (REW)	
M901	1-541-660-11	MOTOR	
HE901	1-543-657-11	HEAD, MAGNETIC (ERASE)	
HRP901	1-543-658-11	HEAD, MAGNETIC (REC/PB)	

5-4. MECHANISM SECTION-2 (MF-WMBF608)

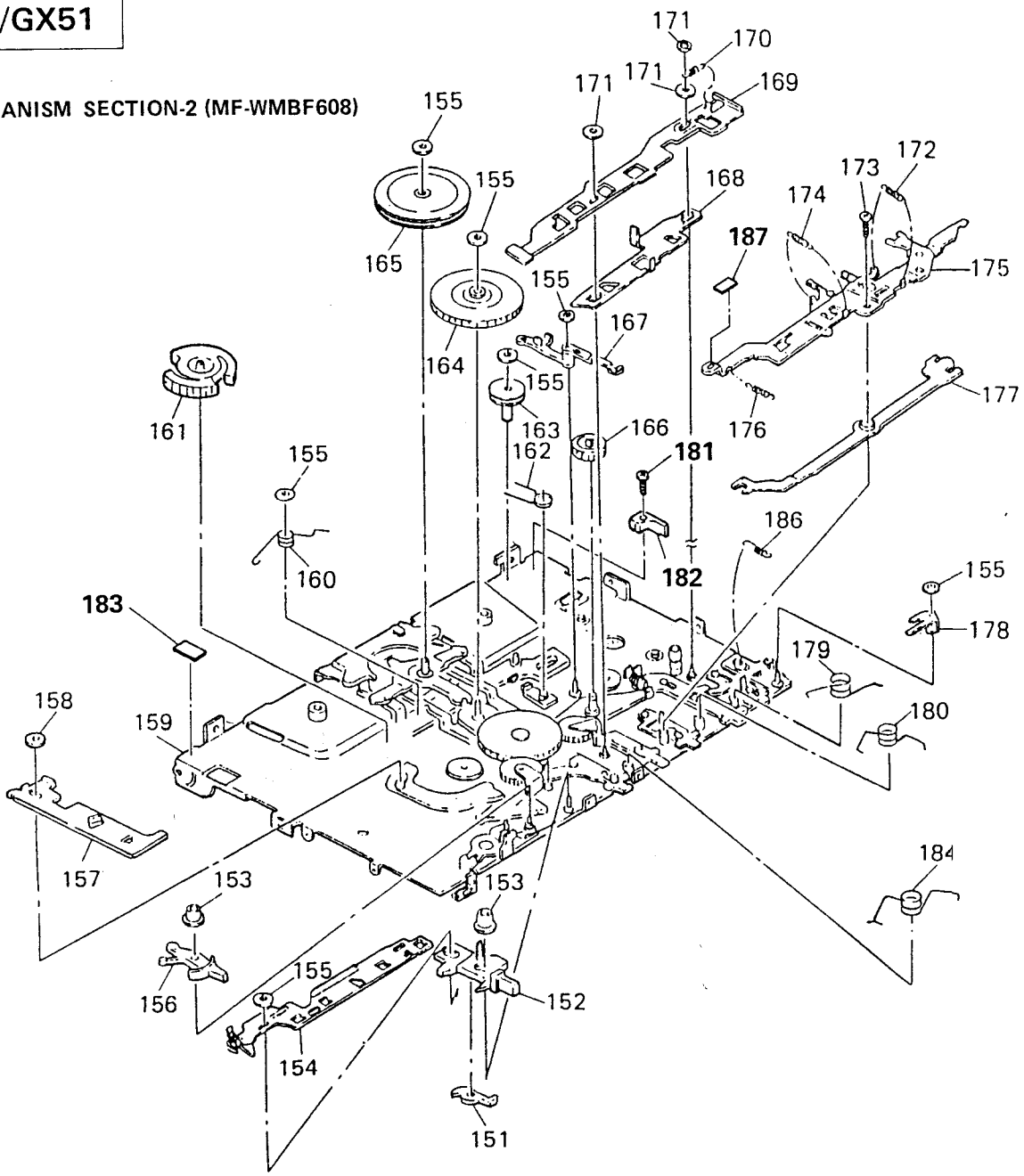

Ref. No.	Part No.	Description	Remark
151	3-348-101-01	RATCHET	
152	3-395-501-01	LEVER, DIR	
153	3-348-102-01	BUSHING	
154	X-3395-502-1	SLIDER ASSY, LOCK	
155	3-348-996-01	WASHER	
156	3-348-105-01	LEVER, MODE SELECTION	
157	3-352-002-02	LEVER (X), TRIGGER	
158	3-348-953-11	WASHER	
159	X-3395-501-1	CHASSIS COMPLETE ASSY	
160	3-348-172-03	SPRING (S.OFF), TORSION	
161	3-352-032-01	GEAR (X), CAM	
162	3-348-159-01	SPRING (NR), TORSION	
163	3-352-008-01	PULLEY (REVERSE.X)	
164	X-3352-027-3	CLUTCH (X) ASSY	
165	3-352-007-01	PULLEY (MIDWAY.X)	
166	3-352-021-01	GEAR (N.X)	
167	3-395-509-01	LEVER, NR	
168	3-395-503-01	SLIDER, SW	
169	3-395-504-01	SLIDER, REC	
170	3-395-505-01	SPRING (REC SLIDER), TENSION	
171	3-348-953-21	WASHER	
172	3-395-534-01	SPRING, TENSION	
173	3-348-998-31	SCREW (M1.4X2.5), TAPPING, PAN	
174	3-395-535-01	SPRING, TENSION	
175	X-3395-503-1	BRACKET ASSY, EJECT	
176	3-395-508-01	SPRING, TENSION	
177	3-395-507-01	LEVER, REC SW	
178	3-395-542-01	LEVER (B), REC	
179	3-395-506-01	SPRING (LOCK SLIDER), TORSION	
180	3-348-103-01	SPRING (PLAY), TORSION	
181	3-704-252-41	SCREW (M1.4X6)	
182	3-357-918-01	GUIDE (BELT)	
183	3-703-929-01	SPACER (P)	
184	3-395-577-01	SPRING (FR), TORSION	
186	3-395-541-01	SPRING, TENSION	
187	3-375-673-01	SPACER (DD)(GX51)	

AUDIO

SECTION 6
ELECTRICAL PARTS LIST

NOTE:

- Due to standardization, replacements in the parts list may be different from the parts specified in the diagrams or the components used on the set.
- –XX, –X mean standardized parts, so they may have some difference from the original one.
- RESISTORS
  All resistors are in ohms
  METAL: Metal-film resistor
  METAL OXIDE: Metal Oxide-film resistor
  F: nonflammable
- Items marked " * " are not stocked since they are seldom required for routine service. Some delay should be anticipated when ordering these items.
- SEMICONDUCTORS
  In each case, u: μ, for example:
  uA...: μA..., uPA...: μPA...,
  uPB...: μPB..., uPC...: μPC...,
  uPD...: μPD...
- CAPACITORS
  uF: μF
- COILS
  uH: μH

When indicating parts by reference number, please include the board name.

- Abbreviation
  IT: Italian model
  EA: Saudi Arabia model

Ref. No.	Part No.	Description			Remark
	A-3016-127-A	AUDIO BOARD, COMPLETE (GX51)			
	A-3016-130-A	AUDIO BOARD, COMPLETE (GX50)			
		**********			
	3-352-048-01	TERMINAL BOARD, MINUS			
	3-354-441-01	HOLDER (A), TERMINAL			
	3-354-442-01	HOLDER (B), TERMINAL			
	3-373-582-01	TERMINAL, PLUS			
	3-831-441-XX	SPACER (GX51)			
	9-911-838-XX	CUSHION (B), RUBBER			
		< CAPACITOR >			
C101	1-135-091-00	TANTALUM CHIP	1uF	20%	16V
C102	1-135-091-00	TANTALUM CHIP	1uF	20%	16V
C103	1-162-963-11	CERAMIC CHIP	680PF	10%	50V
C104	1-164-346-11	CERAMIC CHIP	1uF		16V
C105	1-164-361-11	CERAMIC CHIP	0.047uF		16V
C106	1-135-145-11	TANTALUM CHIP	0.47uF	10%	35V
C107	1-135-316-11	TANTAL. CHIP	22uF	20%	2.5V
C108	1-135-316-11	TANTAL. CHIP	22uF	20%	2.5V
C109	1-164-156-11	CERAMIC CHIP	0.1uF		25V
C110	1-162-967-11	CERAMIC CHIP	0.0033uF	10%	50V
C111	1-164-677-11	CERAMIC CHIP	0.033uF	10%	16V
C112	1-135-180-21	TANTALUM CHIP	3.3uF	20%	6.3V
C113	1-164-174-11	CERAMIC CHIP	0.0082uF	10%	25V
C114	1-162-967-11	CERAMIC CHIP	0.0033uF	10%	50V
C115	1-135-091-00	TANTALUM CHIP	1uF	20%	16V
C116	1-162-970-11	CERAMIC CHIP	0.01uF	10%	25V
C117	1-135-145-11	TANTALUM CHIP	0.47uF	10%	35V
C118	1-135-218-11	TANTAL. CHIP	4.7uF	20%	2.5V
C119	1-162-961-11	CERAMIC CHIP	330PF	10%	50V
C120	1-162-968-11	CERAMIC CHIP	0.0047uF	10%	50V
C121	1-135-218-11	TANTAL. CHIP	4.7uF	20%	2.5V
C122	1-162-979-11	CERAMIC CHIP	0.0027uF	10%	50V
C123	1-164-156-11	CERAMIC CHIP	0.1uF		25V
C124	1-162-964-11	CERAMIC CHIP	0.001uF	10%	50V
C125	1-162-956-11	CERAMIC CHIP	180PF	5%	50V
C126	1-164-227-11	CERAMIC CHIP	0.022uF	10%	25V
C127	1-162-968-11	CERAMIC CHIP	0.0047uF	10%	50V (GX51)
C127	1-162-970-11	CERAMIC CHIP	0.01uF	10%	25V (GX50)
C128	1-162-953-11	CERAMIC CHIP	100PF	5%	50V
C129	1-162-953-11	CERAMIC CHIP	100PF	5%	50V
C130	1-162-953-11	CERAMIC CHIP	100PF	5%	50V
C131	1-162-953-11	CERAMIC CHIP	100PF	5%	50V
C201	1-135-091-00	TANTALUM CHIP	1uF	20%	16V
C202	1-135-091-00	TANTALUM CHIP	1uF	20%	16V
C203	1-162-963-11	CERAMIC CHIP	680PF	10%	50V
C204	1-164-346-11	CERAMIC CHIP	1uF		16V
C205	1-164-361-11	CERAMIC CHIP	0.047uF		16V
C206	1-135-145-11	TANTALUM CHIP	0.47uF	10%	35V
C207	1-135-316-11	TANTAL. CHIP	22uF	20%	2.5V
C208	1-135-316-11	TANTAL. CHIP	22uF	20%	2.5V
C209	1-164-156-11	CERAMIC CHIP	0.1uF		25V
C210	1-162-967-11	CERAMIC CHIP	0.0033uF	10%	50V
C211	1-164-677-11	CERAMIC CHIP	0.033uF	10%	16V
C212	1-135-180-21	TANTALUM CHIP	3.3uF	20%	6.3V
C213	1-164-174-11	CERAMIC CHIP	0.0082uF	10%	25V
C214	1-162-967-11	CERAMIC CHIP	0.0033uF	10%	50V
C215	1-135-091-00	TANTALUM CHIP	1uF	20%	16V
C216	1-162-970-11	CERAMIC CHIP	0.01uF	10%	25V
C217	1-135-145-11	TANTALUM CHIP	0.47uF	10%	35V
C218	1-135-218-11	TANTAL. CHIP	4.7uF	20%	2.5V
C219	1-162-961-11	CERAMIC CHIP	330PF	10%	50V
C220	1-162-968-11	CERAMIC CHIP	0.0047uF	10%	50V
C221	1-135-218-11	TANTAL. CHIP	4.7uF	20%	2.5V
C222	1-162-979-11	CERAMIC CHIP	0.0027uF	10%	50V
C223	1-164-156-11	CERAMIC CHIP	0.1uF		25V
C224	1-162-964-11	CERAMIC CHIP	0.001uF	10%	50V
C225	1-162-956-11	CERAMIC CHIP	180PF	5%	50V
C226	1-164-227-11	CERAMIC CHIP	0.022uF	10%	25V
C227	1-162-968-11	CERAMIC CHIP	0.0047uF	10%	50V (GX51)
C227	1-162-970-11	CERAMIC CHIP	0.01uF	10%	25V (GX50)

AUDIO

Ref. No.	Part No.	Description			Remark
C228	1-162-953-11	CERAMIC CHIP	100PF	5%	50V
C229	1-162-953-11	CERAMIC CHIP	100PF	5%	50V
C230	1-162-953-11	CERAMIC CHIP	100PF	5%	50V
C231	1-162-953-11	CERAMIC CHIP	100PF	5%	50V
C301	1-135-316-11	TANTAL. CHIP	22uF	20%	2.5V
C302	1-135-316-11	TANTAL. CHIP	22uF	20%	2.5V
C303	1-135-201-11	TANTALUM CHIP	10uF	20%	4V
C304	1-135-316-11	TANTAL. CHIP	22uF	20%	2.5V
C305	1-135-180-21	TANTALUM CHIP	3.3uF	20%	6.3V
C306	1-162-964-11	CERAMIC CHIP	0.001uF	10%	50V
C307	1-124-576-11	ELECT	220uF	20%	4V
C308	1-164-156-11	CERAMIC CHIP	0.1uF		25V
C309	1-124-947-11	ELECT	220uF	20%	1.5V
C310	1-135-316-11	TANTAL. CHIP	22uF	20%	2.5V
C311	1-162-970-11	CERAMIC CHIP	0.01uF	10%	25V
C312	1-135-180-21	TANTALUM CHIP	3.3uF	20%	6.3V
C313	1-135-316-11	TANTAL. CHIP	22uF	20%	2.5V
C314	1-164-346-11	CERAMIC CHIP	1uF		16V
C315	1-135-180-21	TANTALUM CHIP	3.3uF	20%	6.3V
C316	1-164-490-11	CERAMIC CHIP	0.068uF		16V
C317	1-135-219-11	TANTAL. CHIP	15uF	20%	2.5V
C318	1-162-964-11	CERAMIC CHIP	0.001uF	10%	50V
C319	1-135-218-11	TANTAL. CHIP	4.7uF	20%	2.5V
C320	1-135-316-11	TANTAL. CHIP	22uF	20%	2.5V
C321	1-162-953-11	CERAMIC CHIP	100PF	5%	50V
C322	1-135-316-11	TANTAL. CHIP	22uF	20%	2.5V
C323	1-162-953-11	CERAMIC CHIP	100PF	5%	50V
C324	1-126-117-11	ELECT	330uF	20%	2V
C325	1-163-123-00	CERAMIC CHIP	180PF	5%	50V
C326	1-163-131-00	CERAMIC CHIP	390PF	5%	50V
C327	1-163-017-00	CERAMIC CHIP	0.0047uF	5%	50V
C328	1-162-968-11	CERAMIC CHIP	0.0047uF	10%	50V
C329	1-162-968-11	CERAMIC CHIP	0.0047uF	10%	50V
C330	1-164-156-11	CERAMIC CHIP	0.1uF		25V
C331	1-164-156-11	CERAMIC CHIP	0.1uF		25V
C332	1-124-576-11	ELECT	220uF	20%	4V
C333	1-162-970-11	CERAMIC CHIP	0.01uF	10%	25V
C334	1-135-091-00	TANTALUM CHIP	1uF	20%	16V
C335	1-126-236-11	ELECT	330uF	20%	2V
C336	1-135-316-11	TANTAL. CHIP	22uF	20%	2.5V
C337	1-135-219-11	TANTAL. CHIP	15uF	20%	2.5V
C338	1-135-201-11	TANTALUM CHIP	10uF	20%	4V
C339	1-164-156-11	CERAMIC CHIP	0.1uF		25V
C340	1-162-953-11	CERAMIC CHIP	100PF	5%	50V
C341	1-162-953-11	CERAMIC CHIP	100PF	5%	50V
C342	1-162-970-11	CERAMIC CHIP	0.01uF	10%	25V
C401	1-164-156-11	CERAMIC CHIP	0.1uF		25V
C402	1-164-156-11	CERAMIC CHIP	0.1uF		25V
C403	1-135-316-11	TANTAL. CHIP	22uF	20%	2.5V
C404	1-135-149-21	TANTALUM CHIP	2.2uF	20%	10V
C405	1-135-201-11	TANTALUM CHIP	10uF	20%	4V
C406	1-162-970-11	CERAMIC CHIP	0.01uF	10%	25V
C407	1-164-156-11	CERAMIC CHIP	0.1uF		25V
C408	1-162-970-11	CERAMIC CHIP	0.01uF	10%	25V
C409	1-164-156-11	CERAMIC CHIP	0.1uF		25V
C410	1-135-201-11	TANTALUM CHIP	10uF	20%	4V
C411	1-135-218-11	TANTAL. CHIP	4.7uF	20%	2.5V
C412	1-164-346-11	CERAMIC CHIP	1uF		16V
C413	1-135-201-11	TANTALUM CHIP	10uF	20%	4V
C414	1-162-970-11	CERAMIC CHIP	0.01uF	10%	25V
C501	1-164-234-11	CERAMIC CHIP	1uF		10V (GX51)
C502	1-135-219-11	TANTAL. CHIP	15uF	20%	2.5V (GX51)
C503	1-162-969-11	CERAMIC CHIP	0.0068uF	10%	25V (GX51)
C504	1-135-201-11	TANTALUM CHIP	10uF	20%	4V (GX51)
C505	1-135-201-11	TANTALUM CHIP	10uF	20%	4V (GX51)
C601	1-164-232-11	CERAMIC CHIP	0.01uF		50V
C602	1-135-187-21	TANTAL. CHIP	2.2uF	20%	4V
C603	1-135-187-21	TANTAL. CHIP	2.2uF	20%	4V
C604	1-164-232-11	CERAMIC CHIP	0.01uF		50V
C605	1-135-187-21	TANTAL. CHIP	2.2uF	20%	4V
C606	1-164-232-11	CERAMIC CHIP	0.01uF		50V
C607	1-135-187-21	TANTAL. CHIP	2.2uF	20%	4V
C608	1-164-346-11	CERAMIC CHIP	1uF		16V
C609	1-135-218-11	TANTAL. CHIP	4.7uF	20%	2.5V
C701	1-164-156-11	CERAMIC CHIP	0.1uF		25V (GX50)
C801	1-124-576-11	ELECT	220uF	20%	4V (GX51)
C802	1-164-156-11	CERAMIC CHIP	0.1uF		25V (GX51)
C803	1-135-149-21	TANTALUM CHIP	2.2uF	20%	10V (GX51)

< CONNECTOR >

CN301	1-580-919-11	JACK, DC (POLARITY UNIFIED TYPE)	(DC IN 1.5V)
* CN302	1-691-323-11	HOUSING, CONNECTOR (FPC) 10P	

< DIODE >

D302	8-719-421-27	DIODE	MA728
D303	8-719-421-27	DIODE	MA728
D304	8-719-421-27	DIODE	MA728
D305	8-719-421-27	DIODE	MA728
D401	8-719-976-16	LED	GL2PR90
D501	8-719-938-75	DIODE	SB05-05CP (GX51)
D502	8-719-975-06	LED	CL-70G-CD (GX51)
D502	8-719-975-08	DIODE	CL-70G-CD-TL (LED) (GX51)

Ref. No.	Part No.	Description	Remark
		< IC >	
IC301	8-752-036-56	IC CXA1010N	
IC302	8-759-230-88	IC TA7793FN	
IC303	8-759-512-77	IC RC2106M	
IC304	8-759-805-02	IC LA4538M	
IC601	8-759-821-20	IC LB1672M	
		< JACK >	
J301	1-573-977-11	JACK (MIC)	
J302	1-573-976-11	JACK (HEADPHONES)	
		< METAL CHIP >	
JP301	1-216-864-11	METAL CHIP 0 5% 1/16W	
		< COIL >	
L101	1-412-005-11	INDUCTOR CHIP 8.2uH	
L201	1-412-005-11	INDUCTOR CHIP 8.2uH	
L301	1-412-005-11	INDUCTOR CHIP 8.2uH	
L302	1-410-213-51	INDUCTOR CHIP 56uH	
L501	1-410-213-51	INDUCTOR CHIP 56uH (GX51)	
L502	1-410-213-51	INDUCTOR CHIP 56uH (GX51)	
L801	1-410-213-51	INDUCTOR CHIP 56uH (GX51)	
		< TRANSISTOR >	
Q101	8-729-144-15	TRANSISTOR 2SD2228-D43	
Q102	8-729-402-32	TRANSISTOR 2SD1819A-R	
Q201	8-729-144-15	TRANSISTOR 2SD2228-D43	
Q202	8-729-402-32	TRANSISTOR 2SD1819A-R	
Q301	8-729-402-93	TRANSISTOR UN5214	
Q302	8-729-420-53	TRANSISTOR UN5115	
Q303	8-729-402-32	TRANSISTOR 2SD1819A-R	
Q304	8-729-420-50	TRANSISTOR UN5215	
Q305	8-729-403-45	TRANSISTOR XN1115	
Q306	8-729-402-32	TRANSISTOR 2SD1819A-R	
Q307	8-729-402-32	TRANSISTOR 2SD1819A-R	
Q308	8-729-420-53	TRANSISTOR UN5115	
Q309	8-729-807-87	TRANSISTOR 2SB1295-UL6	
Q310	8-729-400-56	TRANSISTOR 2SD1328-T	
Q311	8-729-807-87	TRANSISTOR 2SB1295-UL6	
Q311	8-729-807-92	TRANSISTOR 2SB1295-UL7-TA	
Q312	8-729-402-13	TRANSISTOR XN1501	
Q313	8-729-402-32	TRANSISTOR 2SD1819A-R	
Q314	8-729-403-17	TRANSISTOR XN1215	
Q315	8-729-403-17	TRANSISTOR XN1215	
Q316	8-729-402-32	TRANSISTOR 2SD1819A-R	
Q317	8-729-420-50	TRANSISTOR UN5215	
Q318	8-729-420-50	TRANSISTOR UN5215	
Q319	8-729-402-55	TRANSISTOR 2SB1218A-R	
Q320	8-729-402-16	TRANSISTOR XN4608	
Q321	8-729-402-16	TRANSISTOR XN4608	
Q401	8-729-402-93	TRANSISTOR UN5214	
Q402	8-729-402-93	TRANSISTOR UN5214	
Q403	8-729-402-55	TRANSISTOR 2SB1218A-R	
Q404	8-729-420-50	TRANSISTOR UN5215	
Q405	8-729-402-32	TRANSISTOR 2SD1819A-R	
Q406	8-729-402-32	TRANSISTOR 2SD1819A-R	
Q408	8-729-402-32	TRANSISTOR 2SD1819A-R	
Q409	8-729-402-32	TRANSISTOR 2SD1819A-R	
Q410	8-729-402-75	TRANSISTOR XN5501	
Q411	8-729-402-13	TRANSISTOR XN1501	
Q412	8-729-402-32	TRANSISTOR 2SD1819A-R	
Q413	8-729-402-55	TRANSISTOR 2SB1218A-R	
Q414	8-729-402-32	TRANSISTOR 2SD1819A-R	
Q501	?8-729-117-16	TRANSISTOR 2SA1611-M6 (GX51)	
Q501	?8-729-602-36	TRANSISTOR 2SA1602 (GX51)	
Q502	8-729-400-56	TRANSISTOR 2SD1328-T (GX51)	
Q503	8-729-602-21	TRANSISTOR 2SC4154-F (GX51)	
Q701	8-729-402-32	TRANSISTOR 2SD1819A-R (GX50)	
Q801	8-729-402-32	TRANSISTOR 2SD1819A-R (GX51)	
Q802	8-729-420-50	TRANSISTOR UN5215 (GX51)	
Q803	8-729-420-53	TRANSISTOR UN5115 (GX51)	
Q804	8-729-420-50	TRANSISTOR UN5215 (GX51)	
		< RESISTOR >	
R101	1-216-831-11	METAL CHIP 6.8K 5% 1/16W	
R102	1-216-821-11	METAL CHIP 1K 5% 1/16W	
R103	1-216-821-11	METAL CHIP 1K 5% 1/16W	
R104	1-216-845-11	METAL CHIP 100K 5% 1/16W	
R105	1-216-843-11	METAL CHIP 68K 5% 1/16W	
R106	1-216-827-11	METAL CHIP 3.3K 5% 1/16W	
R107	1-216-845-11	METAL CHIP 100K 5% 1/16W	
R108	1-216-838-11	METAL CHIP 27K 5% 1/16W	
R109	1-216-815-11	METAL CHIP 330 5% 1/16W	
R110	1-216-819-11	METAL CHIP 680 5% 1/16W	
R111	1-216-819-11	METAL CHIP 680 5% 1/16W	
R112	1-216-857-11	METAL CHIP 1M 5% 1/16W	
R113	1-218-295-11	METAL GLAZE 43K 5% 1/16W	
R114	1-216-824-11	METAL CHIP 1.8K 5% 1/16W	
R115	1-216-823-11	METAL CHIP 1.5K 5% 1/16W	
R116	1-216-837-11	METAL CHIP 22K 5% 1/16W	
R117	1-216-830-11	METAL CHIP 5.6K 5% 1/16W	
R118	1-216-839-11	METAL CHIP 33K 5% 1/16W	
R119	1-218-294-11	METAL GLAZE 30K 5% 1/16W	
R120	1-216-994-11	METAL GLAZE 13K 5% 1/16W	
R121	1-216-852-11	METAL CHIP 390K 5% 1/16W	

AUDIO

Ref. No.	Part No.	Description			Remark
R122	1-216-840-11	METAL CHIP	39K	5%	1/16W
R123	1-216-825-11	METAL CHIP	2.2K	5%	1/16W
R124	1-216-793-11	METAL GLAZE	4.7	5%	1/16W
R125	1-216-834-11	METAL CHIP	12K	5%	1/16W
R126	1-216-830-11	METAL CHIP	5.6K	5%	1/16W(GX50)
R126	1-218-290-11	METAL GLAZE	6.2K	5%	1/16W(GX51)
R127	1-216-845-11	METAL CHIP	100K	5%	1/16W(GX50)
R127	1-216-847-11	METAL CHIP	150K	5%	1/16W(GX51)
R201	1-216-831-11	METAL CHIP	6.8K	5%	1/16W
R202	1-216-821-11	METAL CHIP	1K	5%	1/16W
R203	1-216-821-11	METAL CHIP	1K	5%	1/16W
R204	1-216-845-11	METAL CHIP	100K	5%	1/16W
R205	1-216-843-11	METAL CHIP	68K	5%	1/16W
R206	1-216-827-11	METAL CHIP	3.3K	5%	1/16W
R207	1-216-845-11	METAL CHIP	100K	5%	1/16W
R208	1-216-838-11	METAL CHIP	27K	5%	1/16W
R209	1-216-815-11	METAL CHIP	330	5%	1/16W
R210	1-216-819-11	METAL CHIP	680	5%	1/16W
R211	1-216-819-11	METAL CHIP	680	5%	1/16W
R212	1-216-857-11	METAL CHIP	1M	5%	1/16W
R213	1-218-295-11	METAL GLAZE	43K	5%	1/16W
R214	1-216-824-11	METAL CHIP	1.8K	5%	1/16W
R215	1-216-823-11	METAL CHIP	1.5K	5%	1/16W
R216	1-216-837-11	METAL CHIP	22K	5%	1/16W
R217	1-216-830-11	METAL CHIP	5.6K	5%	1/16W
R218	1-216-839-11	METAL CHIP	33K	5%	1/16W
R219	1-218-294-11	METAL GLAZE	30K	5%	1/16W
R220	1-216-994-11	METAL GLAZE	13K	5%	1/16W
R221	1-216-852-11	METAL CHIP	390K	5%	1/16W
R222	1-216-840-11	METAL CHIP	39K	5%	1/16W
R223	1-216-825-11	METAL CHIP	2.2K	5%	1/16W
R224	1-216-793-11	METAL GLAZE	4.7	5%	1/16W
R225	1-216-834-11	METAL CHIP	12K	5%	1/16W
R226	1-216-830-11	METAL CHIP	5.6K	5%	1/16W(GX50)
R226	1-218-290-11	METAL GLAZE	6.2K	5%	1/16W(GX51)
R227	1-216-845-11	METAL CHIP	100K	5%	1/16W(GX50)
R227	1-216-847-11	METAL CHIP	150K	5%	1/16W(GX51)
R301	1-216-821-11	METAL CHIP	1K	5%	1/16W
R302	1-216-833-11	METAL CHIP	10K	5%	1/16W
R303	1-216-817-11	METAL CHIP	470	5%	1/16W
R304	1-216-821-11	METAL CHIP	1K	5%	1/16W
R305	1-216-833-11	METAL CHIP	10K	5%	1/16W
R306	1-216-851-11	METAL CHIP	330K	5%	1/16W
R307	1-216-845-11	METAL CHIP	100K	5%	1/16W
R308	1-216-855-11	METAL CHIP	680K	5%	1/16W
R309	1-216-805-11	METAL CHIP	47	5%	1/16W
R310	1-216-836-11	METAL CHIP	18K	5%	1/16W
R311	1-216-841-11	METAL CHIP	47K	5%	1/16W
R312	1-216-841-11	METAL CHIP	47K	5%	1/16W
R313	1-216-825-11	METAL CHIP	2.2K	5%	1/16W
R314	1-216-845-11	METAL CHIP	100K	5%	1/16W
R315	1-216-833-11	METAL CHIP	10K	5%	1/16W
R316	1-216-849-11	METAL CHIP	220K	5%	1/16W
R317	1-216-845-11	METAL CHIP	100K	5%	1/16W
R318	1-216-789-11	METAL CHIP	2.2	5%	1/16W
R319	1-216-805-11	METAL CHIP	47	5%	1/16W
R320	1-216-825-11	METAL CHIP	2.2K	5%	1/16W
R321	1-216-838-11	METAL CHIP	27K	5%	1/16W
R322	1-216-840-11	METAL CHIP	39K	5%	1/16W
R323	1-216-821-11	METAL CHIP	1K	5%	1/16W
R324	1-216-841-11	METAL CHIP	47K	5%	1/16W
R325	1-216-817-11	METAL CHIP	470	5%	1/16W
R326	1-216-841-11	METAL CHIP	47K	5%	1/16W
R327	1-216-849-11	METAL CHIP	220K	5%	1/16W
R328	1-216-849-11	METAL CHIP	220K	5%	1/16W
R329	1-216-855-11	METAL CHIP	680K	5%	1/16W
R330	1-216-833-11	METAL CHIP	10K	5%	1/16W
R331	1-216-833-11	METAL CHIP	10K	5%	1/16W
R332	1-216-841-11	METAL CHIP	47K	5%	1/16W
R333	1-216-833-11	METAL CHIP	10K	5%	1/16W
R401	1-216-833-11	METAL CHIP	10K	5%	1/16W
R402	1-216-833-11	METAL CHIP	10K	5%	1/16W
R403	1-216-845-11	METAL CHIP	100K	5%	1/16W
R404	1-216-830-11	METAL CHIP	5.6K	5%	1/16W
R405	1-216-839-11	METAL CHIP	33K	5%	1/16W
R406	1-216-830-11	METAL CHIP	5.6K	5%	1/16W
R407	1-216-839-11	METAL CHIP	33K	5%	1/16W
R408	1-216-825-11	METAL CHIP	2.2K	5%	1/16W
R409	1-216-833-11	METAL CHIP	10K	5%	1/16W
R410	1-216-833-11	METAL CHIP	10K	5%	1/16W
R411	1-216-815-11	METAL CHIP	330	5%	1/16W
R412	1-216-821-11	METAL CHIP	1K	5%	1/16W
R413	1-216-817-11	METAL CHIP	470	5%	1/16W
R414	1-216-821-11	METAL CHIP	1K	5%	1/16W
R415	1-216-839-11	METAL CHIP	33K	5%	1/16W
R416	1-216-815-11	METAL CHIP	330	5%	1/16W
R417	1-216-815-11	METAL CHIP	330	5%	1/16W
R418	1-216-839-11	METAL CHIP	33K	5%	1/16W
R419	1-216-821-11	METAL CHIP	1K	5%	1/16W
R420	1-216-821-11	METAL CHIP	1K	5%	1/16W
R421	1-216-845-11	METAL CHIP	100K	5%	1/16W
R422	1-216-851-11	METAL CHIP	330K	5%	1/16W
R423	1-216-839-11	METAL CHIP	33K	5%	1/16W

Ref. No.	Part No.	Description			Remark
R424	1-216-830-11	METAL CHIP	5.6K	5%	1/16W
R501	1-216-825-11	METAL CHIP	2.2K	5%	1/16W(GX51)
R502	1-216-814-11	METAL CHIP	270	5%	1/16W(GX51)
R503	1-216-800-11	METAL GLAZE	18	5%	1/16W(GX51)
R504	1-216-825-11	METAL CHIP	2.2K	5%	1/16W(GX51)
R601	1-216-815-11	METAL CHIP	330	5%	1/16W
R602	1-216-849-11	METAL CHIP	220K	5%	1/16W
R603	1-216-833-11	METAL CHIP	10K	5%	1/16W
R604	1-216-834-11	METAL CHIP	12K	5%	1/16W
R605	1-216-829-11	METAL CHIP	4.7K	5%	1/16W
R606	1-216-821-11	METAL CHIP	1K	5%	1/16W
R701	1-216-839-11	METAL CHIP	33K	5%	1/16W(GX50)
R801	1-216-842-11	METAL CHIP	56K	5%	1/16W(GX51)
R802	1-216-839-11	METAL CHIP	33K	5%	1/16W(GX51)
R803	1-216-854-11	METAL CHIP	560K	5%	1/16W(GX51)

< VARIABLE RESISTOR >

RV301	1-241-658-11	RES, VAR, CARBON 10K/10K (VOLUME)
RV601	1-238-711-11	RES, ADJ, METAL GLAZE 2.2K (SPEED)

< SWITCH >

S301	1-572-214-11	SWITCH, SLIDE (FWD/REV)
S302	1-572-214-11	SWITCH, SLIDE (REC/PB)
S303	1-571-506-41	SWITCH, SLIDE (ISS)
S304	1-571-275-31	SWITCH, SLIDE (PB EQ)
S305	1-571-275-31	SWITCH, SLIDE (DOLBY NR)
S306	1-571-506-41	SWITCH, SLIDE (MEGA BASE)
S401	1-572-467-11	SWITCH, PUSH (1 KEY) (PLAY)
S402	1-572-933-11	SWITCH, PUSH (POWER)
S403	1-572-933-11	SWITCH, PUSH (DIR)

< TRANSFORMER >

T301	1-466-282-11	OSCILLATION TRANS, BIAS
T501	1-449-543-11	TRANSFORMER, DC-DC CONVERTER (GX51)

****

A-3016-163-A	TUNER BOARD, COMPLETE (WM-GX50:IT)
A-3016-217-A	TUNER BOARD, COMPLETE (WM-GX50 ONLY) (AEP, EA)

****

1-641-662-11	FLEXIBLE BOARD
3-375-057-01	COVER (PC BOARD)

< CAPACITOR >

Ref. No.	Part No.	Description			Remark
C3	1-162-995-11	CERAMIC CHIP	0.022uF		50V
C4	1-162-977-11	CERAMIC CHIP	0.0018uF	10%	50V
C5	1-164-173-11	CERAMIC CHIP	0.0039uF	10%	50V
C6	1-162-961-11	CERAMIC CHIP	330PF	10%	50V
C8	1-135-091-00	TANTALUM CHIP	1uF	20%	16V
C9	1-163-104-00	CERAMIC CHIP	30PF	5%	50V
C10	1-162-939-11	CERAMIC CHIP	8PF	0.5PF	50V
C11	1-162-995-11	CERAMIC CHIP	0.022uF		50V
C12	1-162-964-11	CERAMIC CHIP	0.001uF	10%	50V
C13	1-135-149-21	TANTALUM CHIP	2.2uF	20%	10V
C14	1-135-151-21	TANTALUM CHIP	4.7uF	20%	4V
C15	1-164-346-11	CERAMIC CHIP	1uF		16V
C16	1-135-201-11	TANTALUM CHIP	10uF	20%	4V
C17	1-164-346-11	CERAMIC CHIP	1uF		16V
C18	1-162-967-11	CERAMIC CHIP	0.0033uF	10%	50V
C19	1-164-222-11	CERAMIC CHIP	0.22uF		25V
C20	1-162-967-11	CERAMIC CHIP	0.0033uF	10%	50V
C21	1-162-625-11	CERAMIC CHIP	0.0047uF	5%	50V
C22	1-164-346-11	CERAMIC CHIP	1uF		16V
C23	1-164-222-11	CERAMIC CHIP	0.22uF		25V
C24	1-164-346-11	CERAMIC CHIP	1uF		16V
C25	1-163-113-00	CERAMIC CHIP	68PF	5%	50V
C26	1-135-151-21	TANTALUM CHIP	4.7uF	20%	4V
C27	1-135-201-11	TANTALUM CHIP	10uF	20%	4V
C28	1-163-205-00	CERAMIC CHIP	0.001uF	5%	50V
C29	1-162-964-11	CERAMIC CHIP	0.001uF	10%	50V
C30	1-162-964-11	CERAMIC CHIP	0.001uF	10%	50V
C31	1-135-202-21	TANTAL. CHIP	22uF	20%	4V
C32	1-164-005-11	CERAMIC CHIP	0.47uF		25V
C33	1-164-005-11	CERAMIC CHIP	0.47uF		25V
C34	1-135-201-11	TANTALUM CHIP	10uF	20%	4V
C35	1-135-201-11	TANTALUM CHIP	10uF	20%	4V
C36	1-164-222-11	CERAMIC CHIP	0.22uF		25V
C37	1-162-939-11	CERAMIC CHIP	8PF	0.5PF	50V
C38	1-162-998-11	CERAMIC CHIP	22PF	5%	50V
C40	1-164-428-11	CERAMIC CHIP	1PF	0.25PF	50V
C45	1-135-201-11	TANTALUM CHIP	10uF	20%	4V
C46	1-135-201-11	TANTALUM CHIP	10uF	20%	4V
C47	1-164-362-11	CERAMIC CHIP	470PF	5%	50V
C48	1-162-966-11	CERAMIC CHIP	0.0022uF	10%	50V
C49	1-162-964-11	CERAMIC CHIP	0.001uF	10%	50V
C50	1-162-995-11	CERAMIC CHIP	0.022uF		50V
C51	1-164-346-11	CERAMIC CHIP	1uF		16V
C52	1-162-995-11	CERAMIC CHIP	0.022uF		50V
C53	1-164-156-11	CERAMIC CHIP	0.1uF		25V
C54	1-162-953-11	CERAMIC CHIP	100PF	5%	50V
C55	1-164-174-11	CERAMIC CHIP	0.0082uF	10%	25V
C56	1-135-201-11	TANTALUM CHIP	10uF	20%	4V
C57	1-162-995-11	CERAMIC CHIP	0.022uF		50V
C59	1-162-995-11	CERAMIC CHIP	0.022uF		50V

TUNER

Ref. No.	Part No.	Description			Remark
C60	1-135-201-11	TANTALUM CHIP	10uF	20%	4V
C61	1-164-173-11	CERAMIC CHIP	0.0039uF	10%	50V
C62	1-164-222-11	CERAMIC CHIP	0.22uF		25V
C63	1-163-185-00	CERAMIC CHIP	150PF	5%	50V
C64	1-163-140-00	CERAMIC CHIP	910PF	5%	50V
		< TRIMMER >			
CT1	1-141-327-11	CAP, VAR, TRIMMER (CHIP TYPE) (AM FREQ COVER)			
CT2	1-141-327-11	CAP, VAR, TRIMMER (CHIP TYPE) (AM TRACKING)			
CT3	1-141-325-11	CAP, VAR, TRIMMER (CHIP TYPE) (FM FREQ COVER)			
		< DIODE >			
D1	8-719-951-05	DIODE KV1560			
D2	8-719-939-02	DIODE SVC203CP			
D3	8-719-939-02	DIODE SVC203CP			
D4	8-719-420-51	DIODE MA729			
D5	8-719-420-51	DIODE MA729			
D6	8-719-420-51	DIODE MA729			
D7	8-719-420-51	DIODE MA729			
D8	8-719-420-51	DIODE MA729			
D9	8-719-800-76	DIODE 1SS226			
D50	8-719-421-21	DIODE MA8120-L			
D51	8-719-404-46	DIODE MA110			
D52	8-719-800-76	DIODE 1SS226			
		< FILTER >			
FL1	1-239-015-21	FILTER, BAND PASS			
		< IC >			
IC1	8-752-050-43	IC CXA1129N			
		< JUMPER >			
JR1	1-216-296-00	METAL CHIP	0	5%	1/8W
JR2	1-216-296-00	METAL CHIP	0	5%	1/8W
JR3	1-216-296-00	METAL CHIP	0	5%	1/8W
JR4	1-216-296-00	METAL CHIP	0	5%	1/8W
JR5	1-216-296-00	METAL CHIP	0	5%	1/8W
JR6	1-216-296-00	METAL CHIP	0	5%	1/8W
JR7	1-216-296-00	METAL CHIP	0	5%	1/8W
JR8	1-216-296-00	METAL CHIP	0	5%	1/8W
JR9	1-216-296-00	METAL CHIP	0	5%	1/8W
JR10	1-216-296-00	METAL CHIP	0	5%	1/8W
JR11	1-216-296-00	METAL CHIP	0	5%	1/8W
JR12	1-216-296-00	METAL CHIP	0	5%	1/8W
JR13	1-216-296-00	METAL CHIP	0	5%	1/8W
JR14	1-216-296-00	METAL CHIP	0	5%	1/8W
JR15	1-216-296-00	METAL CHIP	0	5%	1/8W
JR16	1-216-296-00	METAL CHIP	0	5%	1/8W
JR17	1-216-296-00	METAL CHIP	0	5%	1/8W
JR18	1-216-296-00	METAL CHIP	0	5%	1/8W
JR19	1-216-296-00	METAL CHIP	0	5%	1/8W
JR20	1-216-296-00	METAL CHIP	0	5%	1/8W
JR21	1-216-296-00	METAL CHIP	0	5%	1/8W
JR22	1-216-296-00	METAL CHIP	0	5%	1/8W
JR23	1-216-296-00	METAL CHIP	0	5%	1/8W
JR24	1-216-296-00	METAL CHIP	0	5%	1/8W
JR25	1-216-296-00	METAL CHIP	0	5%	1/8W
JR30	1-216-864-11	METAL CHIP	0	5%	1/16W
JR31	1-216-864-11	METAL CHIP	0	5%	1/16W
JR32	1-216-864-11	METAL CHIP	0	5%	1/16W
JR33	1-216-864-11	METAL CHIP	0	5%	1/16W
JR34	1-216-864-11	METAL CHIP	0	5%	1/16W
JR35	1-216-864-11	METAL CHIP	0	5%	1/16W
JR36	1-216-864-11	METAL CHIP	0	5%	1/16W
JR37	1-216-864-11	METAL CHIP	0	5%	1/16W
JR38	1-216-864-11	METAL CHIP	0	5%	1/16W
JR39	1-216-864-11	METAL CHIP	0	5%	1/16W
JR40	1-216-864-11	METAL CHIP	0	5%	1/16W
JR41	1-216-864-11	METAL CHIP	0	5%	1/16W
JR42	1-216-864-11	METAL CHIP	0	5%	1/16W
JR43	1-216-864-11	METAL CHIP	0	5%	1/16W
JR44	1-216-864-11	METAL CHIP	0	5%	1/16W
JR45	1-216-864-11	METAL CHIP	0	5%	1/16W
JR46	1-216-864-11	METAL CHIP	0	5%	1/16W
JR47	1-216-864-11	METAL CHIP	0	5%	1/16W
JR48	1-216-864-11	METAL CHIP	0	5%	1/16W
JR49	1-216-864-11	METAL CHIP	0	5%	1/16W
JR50	1-216-864-11	METAL CHIP	0	5%	1/16W
JR51	1-216-864-11	METAL CHIP	0	5%	1/16W
JR52	1-216-864-11	METAL CHIP	0	5%	1/16W
JR53	1-216-864-11	METAL CHIP	0	5%	1/16W
JR54	1-216-864-11	METAL CHIP	0	5%	1/16W
JR55	1-216-864-11	METAL CHIP	0	5%	1/16W
		< COIL >			
L1	1-412-764-21	COIL			
L2	1-402-551-11	ANTENNA, FERRITE-ROD (LW)			
L3	1-424-531-11	COIL			
L5	1-412-763-21	COIL			
L6	1-460-163-11	COIL (WITH CORE)			
L7	1-410-983-31	INDUCTOR CHIP	0.15uH		
L9	1-410-209-51	INDUCTOR CHIP	27uH		
L50	1-412-011-31	INDUCTOR CHIP	27uH		
L51	1-412-011-31	INDUCTOR CHIP	27uH		

TUNER

Ref. No.	Part No.	Description				Remark
		< TRANSISTOR >				
Q1	8-729-402-93	TRANSISTOR	UN5214			
Q4	8-729-403-17	TRANSISTOR	XN1215			
Q5	8-729-144-15	TRANSISTOR	2SD2228-D43			
Q6	8-729-402-96	TRANSISTOR	UN5114			
Q7	8-729-421-74	TRANSISTOR	UN5210-Q			
Q8	8-729-421-23	TRANSISTOR	XN1216			
Q11	8-729-422-54	TRANSISTOR	XN4215			
Q50	8-729-807-87	TRANSISTOR	2SB1295-UL6			
Q51	8-729-100-66	TRANSISTOR	2SC1623-L6			
Q52	8-729-141-75	TRANSISTOR	2SD596DV345			
Q54	8-729-403-42	TRANSISTOR	XN1401			
Q55	8-729-402-13	TRANSISTOR	XN1501			
Q56	8-729-402-13	TRANSISTOR	XN1501			
Q57	8-729-220-93	TRANSISTOR	2SK209-G			
		< RESISTOR >				
R1	1-216-833-11	METAL CHIP	10K	5%	1/16W	
R2	1-216-853-11	METAL CHIP	470K	5%	1/16W	
R3	1-216-853-11	METAL CHIP	470K	5%	1/16W	
R4	1-216-853-11	METAL CHIP	470K	5%	1/16W	
R5	1-216-813-11	METAL CHIP	220	5%	1/16W	
R6	1-216-853-11	METAL CHIP	470K	5%	1/16W	
R8	1-216-800-11	METAL GLAZE	18	5%	1/16W	
R9	1-216-843-11	METAL CHIP	68K	5%	1/16W	
R10	1-216-828-11	METAL CHIP	3.9K	5%	1/16W	
R13	1-216-853-11	METAL CHIP	470K	5%	1/16W	
R15	1-216-845-11	METAL CHIP	100K	5%	1/16W	
R16	1-216-853-11	METAL CHIP	470K	5%	1/16W	
R17	1-216-845-11	METAL CHIP	100K	5%	1/16W	
R20	1-216-819-11	METAL CHIP	680	5%	1/16W	
R21	1-216-829-11	METAL CHIP	4.7K	5%	1/16W	
R22	1-216-829-11	METAL CHIP	4.7K	5%	1/16W	
R23	1-216-845-11	METAL CHIP	100K	5%	1/16W	
R24	1-216-845-11	METAL CHIP	100K	5%	1/16W	
R25	1-216-833-11	METAL CHIP	10K	5%	1/16W	
R50	1-216-833-11	METAL CHIP	10K	5%	1/16W	
R51	1-216-821-11	METAL CHIP	1K	5%	1/16W	
R52	1-216-821-11	METAL CHIP	1K	5%	1/16W	
R53	1-216-833-11	METAL CHIP	10K	5%	1/16W	
R54	1-216-833-11	METAL CHIP	10K	5%	1/16W	
R55	1-216-825-11	METAL CHIP	2.2K	5%	1/16W	
R56	1-216-830-11	METAL CHIP	5.6K	5%	1/16W	
R57	1-216-831-11	METAL CHIP	6.8K	5%	1/16W	
R58	1-216-845-11	METAL CHIP	100K	5%	1/16W	
R59	1-216-833-11	METAL CHIP	10K	5%	1/16W	
R60	1-216-839-11	METAL CHIP	33K	5%	1/16W	

Ref. No.	Part No.	Description				Remark
		< VARIABLE RESISTOR >				
RV51	1-241-414-11	TUNING BLOCK (TUNING)				
RV53	1-238-094-11	RES, ADJ CERMET 220K (1.1V ADJ)				
		< SWITCH >				
S1	1-571-275-31	SWITCH, SLIDE (BAND)				
S2	1-571-506-41	SWITCH, SLIDE (TAPE/RADIO)				
S3	1-571-120-11	SWITCH, SLIDE (FM SENS)				
		< TRANSFORMER >				
T3	1-448-302-11	TRANSFORMER, DC-DC CONVERTER				
	A-3016-129-A	TUNER BOARD, COMPLETE (WM-GX51 ONLY)				
	1-535-749-11	CONDUCTOR (CONNECTION)				
	3-703-929-01	SPACER (C)				
*	3-350-956-01	CASE, SHIELD				
*	3-373-595-01	TERMINAL BOARD (PLUS), BATTERY				
*	3-373-596-01	TERMINAL BOARD (MINUS), BATTERY				
	3-375-679-01	SHEET (PC BOARD)				
		< CAPACITOR >				
C2	1-162-974-11	CERAMIC CHIP	0.01uF		50V	
C3	1-162-974-11	CERAMIC CHIP	0.01uF		50V	
C4	1-135-151-21	TANTALUM CHIP	4.7uF	20%	4V	
C5	1-164-234-11	CERAMIC CHIP	1uF		10V	
C6	1-162-953-11	CERAMIC CHIP	100PF	5%	50V	
C7	1-135-158-21	TANTALUM CHIP	15uF	20%	4V	
C8	1-162-995-11	CERAMIC CHIP	0.022uF		50V	
C9	1-135-158-21	TANTALUM CHIP	15uF	20%	4V	
C10	1-164-234-11	CERAMIC CHIP	1uF		10V	
C11	1-162-941-11	CERAMIC CHIP	10PF	0.5PF	50V	
C12	1-135-158-21	TANTALUM CHIP	15uF	20%	4V	
C13	1-162-995-11	CERAMIC CHIP	0.022uF		50V	
C14	1-163-133-00	CERAMIC CHIP	470PF	5%	50V	
C15	1-162-920-11	CERAMIC CHIP	27PF	5%	50V	
C16	1-162-995-11	CERAMIC CHIP	0.022uF		50V	
C17	1-162-970-11	CERAMIC CHIP	0.01uF	10%	25V	
C18	1-162-999-11	CERAMIC CHIP	91PF	5%	50V	
C19	1-162-932-11	CERAMIC CHIP	2PF	0.25PF	50V	
C22	1-164-315-11	CERAMIC CHIP	470PF	5%	50V	
C23	1-162-934-11	CERAMIC CHIP	3PF	0.25PF	50V	
C24	1-162-995-11	CERAMIC CHIP	0.022uF		50V	
C26	1-163-133-00	CERAMIC CHIP	470PF	5%	50V	
C27	1-164-330-21	CERAMIC CHIP	0.22uF	10%	16V	
C28	1-164-005-11	CERAMIC CHIP	0.47uF		25V	
C29	1-163-275-11	CERAMIC CHIP	0.001uF	5%	50V	

TUNER

Ref. No.	Part No.	Description			Remark
C30	1-162-970-11	CERAMIC CHIP	0.01uF	10%	25V
C31	1-162-970-11	CERAMIC CHIP	0.01uF	10%	25V
C32	1-135-151-21	TANTALUM CHIP	4.7uF	20%	4V
C33	1-164-005-11	CERAMIC CHIP	0.47uF		25V
C34	1-164-234-11	CERAMIC CHIP	1uF		10V
C35	1-162-966-11	CERAMIC CHIP	0.0022uF	10%	50V
C36	1-135-158-21	TANTALUM CHIP	15uF	20%	4V
C37	1-135-201-11	TANTALUM CHIP	10uF	20%	4V
C38	1-162-970-11	CERAMIC CHIP	0.01uF	10%	25V
C39	1-162-966-11	CERAMIC CHIP	0.0022uF	10%	50V
C40	1-135-201-11	TANTALUM CHIP	10uF	20%	4V
C51	1-162-970-11	CERAMIC CHIP	0.01uF	10%	25V
C52	1-162-964-11	CERAMIC CHIP	0.001uF	10%	50V
C53	1-162-964-11	CERAMIC CHIP	0.001uF	10%	50V
C54	1-162-964-11	CERAMIC CHIP	0.001uF	10%	50V
C55	1-164-237-11	CERAMIC CHIP	16PF	5%	50V
C56	1-164-238-11	CERAMIC CHIP	36PF	5%	50V
C57	1-135-202-21	TANTAL. CHIP	22uF	20%	4V
C58	1-162-995-11	CERAMIC CHIP	0.022uF		50V
C59	1-162-970-11	CERAMIC CHIP	0.01uF	10%	25V
C60	1-164-156-11	CERAMIC CHIP	0.1uF		25V
C61	1-162-953-11	CERAMIC CHIP	100PF	5%	50V
C62	1-162-962-11	CERAMIC CHIP	470PF	10%	50V
C63	1-164-006-11	CERAMIC CHIP	0.33uF	10%	16V
C64	1-164-156-11	CERAMIC CHIP	0.1uF		25V
C65	1-164-005-11	CERAMIC CHIP	0.47uF		25V
C66	1-164-234-11	CERAMIC CHIP	1uF		10V
C67	1-162-964-11	CERAMIC CHIP	0.001uF	10%	50V
C68	1-162-941-11	CERAMIC CHIP	10PF	0.5PF	50V
C69	1-135-158-21	TANTALUM CHIP	15uF	20%	4V
C70	1-162-941-11	CERAMIC CHIP	10PF	0.5PF	50V
C71	1-162-974-11	CERAMIC CHIP	0.01uF		50V
C72	1-135-202-21	TANTAL. CHIP	22uF	20%	4V
C73	1-164-156-11	CERAMIC CHIP	0.1uF		25V
C74	1-162-966-11	CERAMIC CHIP	0.0022uF	10%	50V
C75	1-164-005-11	CERAMIC CHIP	0.47uF		25V
C76	1-164-005-11	CERAMIC CHIP	0.47uF		25V
C77	1-162-964-11	CERAMIC CHIP	0.001uF	10%	50V
C87	1-162-995-11	CERAMIC CHIP	0.022uF		50V
C94	1-164-238-11	CERAMIC CHIP	36PF	5%	50V
C95	1-162-964-11	CERAMIC CHIP	0.001uF	10%	50V
		< FILTER >			
CF1	1-579-528-11	FILTER, CERAMIC (10.75MHz)			
CF2	1-579-528-11	FILTER, CERAMIC (10.75MHz)			
CF3	1-567-920-21	FILTER, CERAMIC (10.75MHz)			

Ref. No.	Part No.	Description			Remark
		< TRIMMER >			
CT1	1-141-327-11	CAP, VAR, TRIMMER (CHIP TYPE) (AM TRACKING)			
CT2	1-141-327-11	CAP, VAR, TRIMMER (CHIP TYPE) (FM FREQ COVER)			
		< DIODE >			
D1	8-719-939-02	DIODE	SVC203CP		
D2	8-719-939-02	DIODE	SVC203CP		
D3	8-719-951-05	DIODE	KV1560		
D51	8-719-420-51	DIODE	MA729		
D53	8-719-404-46	DIODE	MA110		
D54	8-719-106-62	DIODE	RD11M-B2		
D55	8-719-420-51	DIODE	MA729		
D56	8-719-938-75	DIODE	SB05-05CP		
D58	8-719-420-51	DIODE	MA729		
		< FILTER >			
FL1	1-236-504-11	FILTER, BAND PASS			
		< IC >			
IC2	8-752-050-00	IC	CX20111		
IC3	8-759-945-89	IC	BA1362FS		
IC4	8-759-146-01	IC	uPD1715G-581-24		
IC6	8-759-947-95	IC	S-8051HN-CD-S		
		< JUMPER >			
JR1	1-216-864-11	METAL CHIP	0	5%	1/16W
JR2	1-216-864-11	METAL CHIP	0	5%	1/16W
JR3	1-216-864-11	METAL CHIP	0	5%	1/16W
JR7	1-216-864-11	METAL CHIP	0	5%	1/16W
JR8	1-216-864-11	METAL CHIP	0	5%	1/16W
JR10	1-216-864-11	METAL CHIP	0	5%	1/16W
		< COIL >			
L1	1-402-282-11	ANTENNA, FERRITE-ROD (MW)			
L2	1-459-590-11	COIL (WITH CORE) (FM RF)			
L3	1-459-590-11	COIL (WITH CORE) (FM OSC)			
L4	1-412-002-31	INDUCTOR CHIP 4.7uH			
L51	1-412-006-31	INDUCTOR CHIP 10uH			
		< LIQUID CRYSTAL DISPLAY >			
LCD1	1-808-578-11	DISPLAY PANEL, LIQUID CRYSTAL			
		< FILTER >			
MF1	1-577-261-21	FILTER, CERAMIC (450KHz)			

TUNER

Ref. No.	Part No.	Description				Remark
		< TRANSISTOR >				
Q2	8-729-905-XX	TRANSISTOR	DTC114TU			
Q3	8-729-117-72	TRANSISTOR	2SC4178-F13			
Q6	8-729-230-63	TRANSISTOR	2SC4116-YG			
Q8	8-729-403-17	TRANSISTOR	XN1215			
Q9	8-729-905-XX	TRANSISTOR	DTC114TU			
Q10	8-729-402-16	TRANSISTOR	XN4608			
Q11	8-729-422-18	TRANSISTOR	XN4315			
Q51	8-729-220-93	TRANSISTOR	2SK209-G			
Q52	8-729-230-63	TRANSISTOR	2SC4116-YG			
Q53	8-729-220-93	TRANSISTOR	2SK209-G			
Q54	8-729-230-63	TRANSISTOR	2SC4116-YG			
Q55	8-729-230-63	TRANSISTOR	2SC4116-YG			
Q56	8-729-402-13	TRANSISTOR	XN1501			
Q57	8-729-402-13	TRANSISTOR	XN1501			
Q58	8-729-402-16	TRANSISTOR	XN4608			
Q60	8-729-402-16	TRANSISTOR	XN4608			
Q61	8-729-402-96	TRANSISTOR	UN5114			
Q62	8-729-807-87	TRANSISTOR	2SB1295-UL6			
Q63	8-729-422-13	TRANSISTOR	XN8081			
Q64	8-729-905-XX	TRANSISTOR	DTC114TU			
Q65	8-729-402-96	TRANSISTOR	UN5114			
		< RESISTOR >				
R2	1-216-837-11	METAL CHIP	22K	5%	1/16W	
R3	1-216-833-11	METAL CHIP	10K	5%	1/16W	
R4	1-216-839-11	METAL CHIP	33K	5%	1/16W	
R5	1-216-837-11	METAL CHIP	22K	5%	1/16W	
R6	1-216-821-11	METAL CHIP	1K	5%	1/16W	
R7	1-216-057-00	METAL CHIP	2.2K	5%	1/10W	
R8	1-216-853-11	METAL CHIP	470K	5%	1/16W	
R9	1-216-833-11	METAL CHIP	10K	5%	1/16W	
R10	1-216-853-11	METAL CHIP	470K	5%	1/16W	
R11	1-216-818-11	METAL CHIP	560	5%	1/16W	
R12	1-216-853-11	METAL CHIP	470K	5%	1/16W	
R13	1-216-833-11	METAL CHIP	10K	5%	1/16W	
R14	1-216-853-11	METAL CHIP	470K	5%	1/16W	
R15	1-216-853-11	METAL CHIP	470K	5%	1/16W	
R17	1-216-853-11	METAL CHIP	470K	5%	1/16W	
R20	1-216-821-11	METAL CHIP	1K	5%	1/16W	
R21	1-216-853-11	METAL CHIP	470K	5%	1/16W	
R22	1-216-821-11	METAL CHIP	1K	5%	1/16W	
R23	1-216-841-11	METAL CHIP	47K	5%	1/16W	
R24	1-216-845-11	METAL CHIP	100K	5%	1/16W	
R25	1-216-839-11	METAL CHIP	33K	5%	1/16W	
R26	1-218-345-11	METAL GLAZE	9.1K	5%	1/16W	
R27	1-216-809-11	METAL CHIP	100	5%	1/16W	
R28	1-216-833-11	METAL CHIP	10K	5%	1/16W	
R31	1-216-807-11	METAL CHIP	68	5%	1/16W	
R32	1-216-837-11	METAL CHIP	22K	5%	1/16W	
R51	1-216-845-11	METAL CHIP	100K	5%	1/16W	
R52	1-216-845-11	METAL CHIP	100K	5%	1/16W	
R53	1-216-845-11	METAL CHIP	100K	5%	1/16W	
R54	1-216-845-11	METAL CHIP	100K	5%	1/16W	
R55	1-216-830-11	METAL CHIP	5.6K	5%	1/16W	
R57	1-216-830-11	METAL CHIP	5.6K	5%	1/16W	
R58	1-216-830-11	METAL CHIP	5.6K	5%	1/16W	
R59	1-216-845-11	METAL CHIP	100K	5%	1/16W	
R61	1-216-857-11	METAL CHIP	1M	5%	1/16W	
R63	1-216-829-11	METAL CHIP	4.7K	5%	1/16W	
R64	1-216-833-11	METAL CHIP	10K	5%	1/16W	
R65	1-216-833-11	METAL CHIP	10K	5%	1/16W	
R66	1-216-830-11	METAL CHIP	5.6K	5%	1/16W	
R67	1-216-837-11	METAL CHIP	22K	5%	1/16W	
R68	1-216-828-11	METAL CHIP	3.9K	5%	1/16W	
R69	1-216-821-11	METAL CHIP	1K	5%	1/16W	
R70	1-216-845-11	METAL CHIP	100K	5%	1/16W	
R71	1-216-841-11	METAL CHIP	47K	5%	1/16W	
R72	1-218-272-11	METAL GLAZE	5.1K	5%	1/16W	
R73	1-216-823-11	METAL CHIP	1.5K	5%	1/16W	
R75	1-216-828-11	METAL CHIP	3.9K	5%	1/16W	
R76	1-216-843-11	METAL CHIP	68K	5%	1/16W	
R78	1-216-821-11	METAL CHIP	1K	5%	1/16W	
R79	1-216-857-11	METAL CHIP	1M	5%	1/16W	
R80	1-216-857-11	METAL CHIP	1M	5%	1/16W	
R81	1-216-837-11	METAL CHIP	22K	5%	1/16W	
R82	1-216-843-11	METAL CHIP	68K	5%	1/16W	
R83	1-216-849-11	METAL CHIP	220K	5%	1/16W	
R86	1-216-837-11	METAL CHIP	22K	5%	1/16W	
R87	1-216-830-11	METAL CHIP	5.6K	5%	1/16W	
R88	1-216-821-11	METAL CHIP	1K	5%	1/16W	
R89	1-216-863-11	METAL GLAZE	3.3M	5%	1/16W	
R90	1-216-863-11	METAL GLAZE	3.3M	5%	1/16W	
R91	1-216-853-11	METAL CHIP	470K	5%	1/16W	
R95	1-216-830-11	METAL CHIP	5.6K	5%	1/16W	
R96	1-216-821-11	METAL CHIP	1K	5%	1/16W	
R97	1-216-829-11	METAL CHIP	4.7K	5%	1/16W	
R99	1-216-857-11	METAL CHIP	1M	5%	1/16W	
		< VARIABLE RESISTOR >				
RV1	1-237-927-11	RES, ADJ, CERMET 10K (VCO)				

TUNER

Ref. No.	Part No.	Description	Remark
		< SWITCH >	
S1	1-571-533-31	SWITCH, KEY BOARD (RADIO ON/OFF, BAND)	
S2	1-571-533-31	SWITCH, KEY BOARD (RESET)	
S3	1-570-204-21	SWITCH, KEY BOARD (ENTER)	
S4	1-570-204-21	SWITCH, KEY BOARD (SCAN +)	
S5	1-570-204-21	SWITCH, KEY BOARD (SCAN -)	
S6	1-571-275-31	SWITCH, SLIDE (FM MONO/ST)	
		< TRANSFORMER >	
T1	1-404-690-11	TRANSFORMER, IF (AM)	
T2	1-406-177-11	COIL (AM OSC)	
T3	1-449-021-21	TRANSFORMER, DC-DC CONVERTER	
		< VIBRATOR >	
X1	1-577-262-11	VIBRATOR, CRYSTAL (75KHz)	

****

MISCELLANEOUS
****

23	1-641-663-11	PC BOARD, FLEXIBLE (GX51)	
130	1-638-313-11	PC BOARD, MOTOR FLEXIBLE	
HE901	1-543-657-11	HEAD, MAGNETIC (ERASE)	
HRP901	1-543-658-11	HEAD, MAGNETIC (REC/PB)	
L2	1-402-553-11	ANTENNA, FERRITE-ROD (MW) (GX51)	
M901	1-541-660-11	MOTOR	

****

ACCESSORIES & PACKING MATERIALS
****

	1-542-116-11	MICROPHONE	
*	3-372-556-01	INDIVIDUAL CARTON (GX50)	
*	3-372-563-01	INDIVIDUAL CARTON (GX51)	
*	3-372-558-01	CASE, ACCESSORY	
*	3-372-567-01	CUSHION	
	3-373-586-01	CASE, CARRYING (GX50)	
	3-373-604-01	CASE, CARRYING (GX51)	
	3-754-239-11	MANUAL, INSTRUCTION (ENGLISH, FRENCH) (GX50)	
	3-754-239-41	MANUAL, INSTRUCTION (GERMAN, SPANISH) (GX50)	
	3-754-240-11	MANUAL, INSTRUCTION (ENGLISH, FRENCH) (GX51)	
	3-754-240-41	MANUAL, INSTRUCTION (GERMAN, SPANISH) (GX51)	
	8-953-400-90	HEADPHONE MDR-E552 SET	
	9-911-839-XX	CUSHION, LOCK PLATE	
	X-3336-715-1	STAND ASSY, MICROPHONE	

English
92C0663-1
Printed in Japan
©1992.3
Published by Customer Relations and Service Group

9-956-768-21

Sony Corporation
General Audio Group