SERVICE MANUAL

KENWOOD KA-1100SD

STEREO INTEGRATED AMPLIFIER

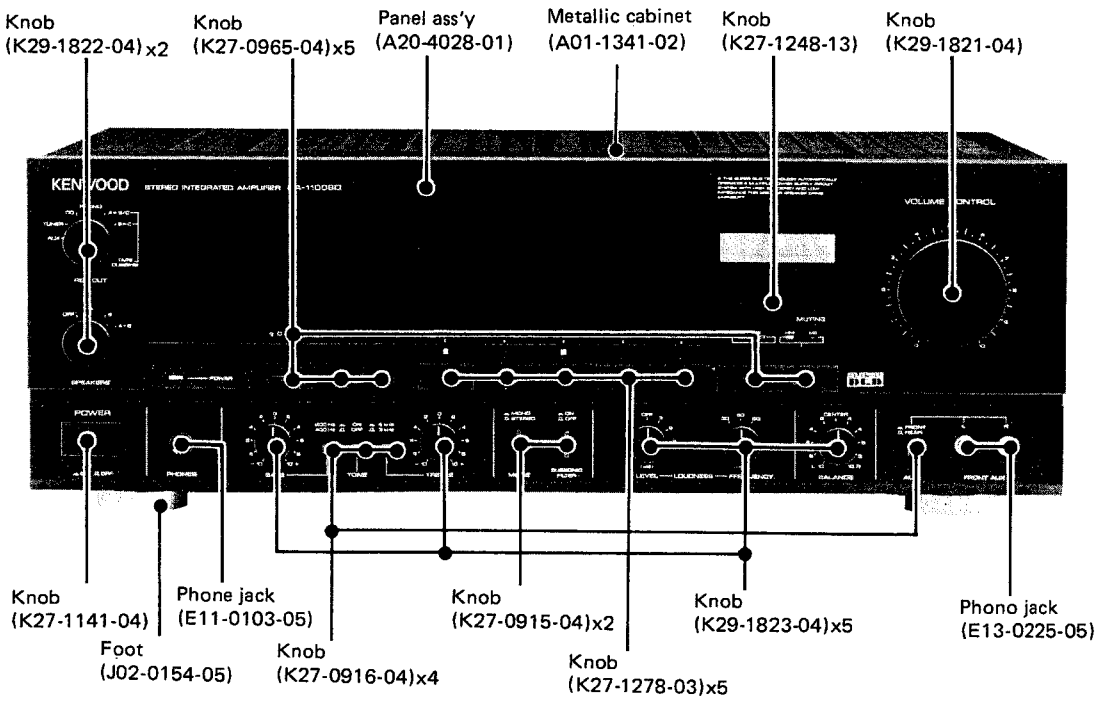

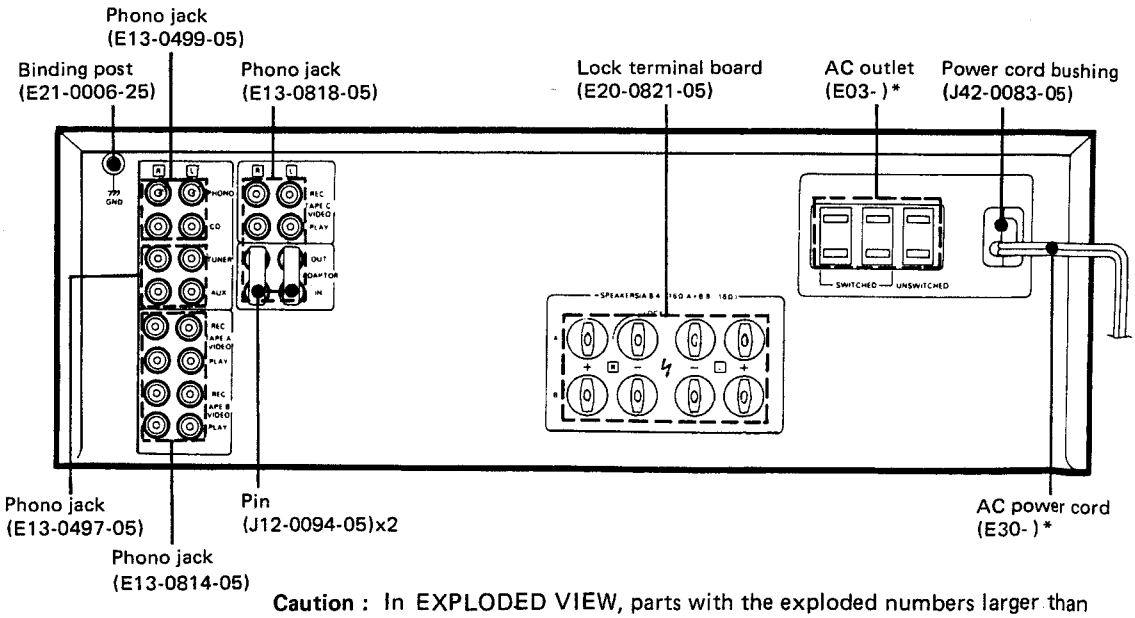

Caution : In EXPLODED VIEW, parts with the exploded numbers larger than 700 are not supplied.

*Refer to Parts list on page 12.

BLOCK DIAGRAM

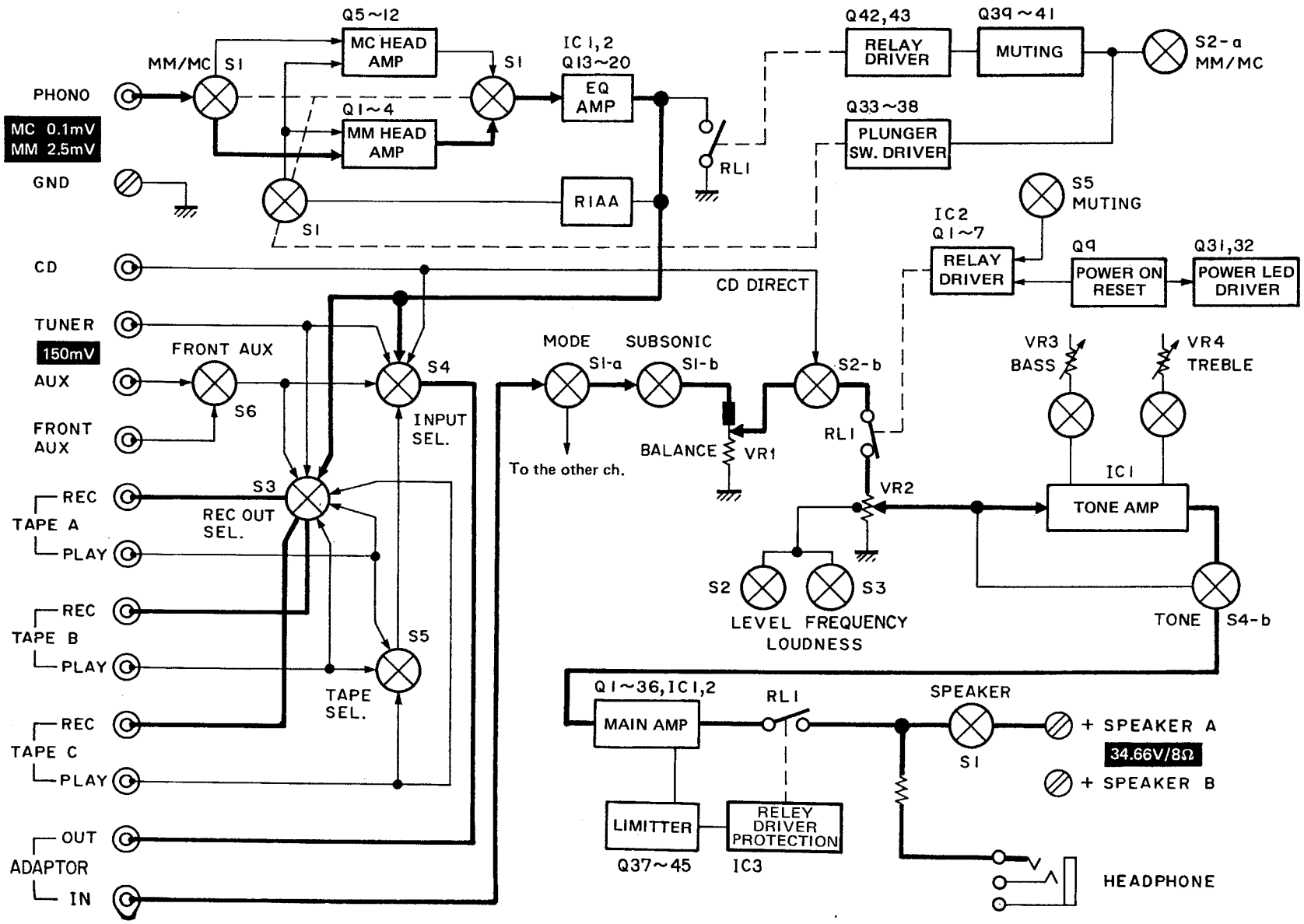

CIRCUIT DESCRIPTION

(X08-2160-81)

Element	Use and function	Operation, rating and interchangeability
Q1~Q4	Differential amp	Input differential amp for MM cartridge.
Q5~Q12	Differential amp	Input differential amp for MC cartridge.
Q13~Q16	Cascade	
Q17, Q18	For constant current supply	Determines the current supplied to the input differential amp, together with D11~D13 and R31~R34.
Q19~Q22	For constant current supply	Constant current supply circuit for output complementary circuit Q23~Q26.
Q23~Q26	Output complementary circuit	
Q27, Q28	Power supply control transistor	Control transistor for EQ constant voltage circuit.
Q29, Q30	Constant current for power supply	Constant current supply transistor for Q27 and Q28.
Q31, Q32	Flip-flop	Drives power indicator.
Q33~Q38	Plunger relay drive	Drives the plunger of the relay which switches MM and MC mode.
Q39~Q43	Muting	Mutes the output when switching between MM and MC mode.
IC1	Equalizer amp	

(X07-2200-11)

Element	Use and function	Operation, rating and interchangeability
Q1, Q2	First stage differential amp	
Q3, Q4	Constant current	Constant current transistors for first stage differential amp Q1 and Q2.
Q5~Q8	Cascade	
Q9, Q10	Second stage differential amp	
Q11~Q14	Third stage differential amp	Class A amplifier.
Q15, Q16	Voltage shift	
Q17, Q18	Constant current	
Q19, Q20	Bias	
Q21~Q24	Pre-driver	
Q29~Q32	High power	High output final transistor.
Q33~Q38	Low power	Low output final transistor.
Q37~Q44	Current protection	Q43 and Q44 are high tension transistors.
Q45	Protection driver	Drive transistor for protection IC.
IC1, IC2	High/Low power selector IC	Switching IC for high and low output signal transistor.
IC3	Protection relay driver	Driven by Q45 to drive protection relays RL1 and RL2.

(X11-1890-01)

Element	Use and function	Operation, rating and interchangeability
Q1, Q2	Muting	Controlled by muting switch S5.
Q3	Muting indicator inverter	Controlled by IC2 to turn off at muting on.
Q4, Q7	Muting relay driver	Controlled by IC2 to turn on when muting relay RL1 is activated.
Q5, Q6	Muting indicator driver	Turns on when Q3 is on (muting switch S5 is on) to light the indicator.
Q9	Power on reset	
IC2	Relay driver	Controls the muting relay RL1 and the muting indicator circuit.

CIRCUIT DESCRIPTION

DESCRIPTION OF SUPER DLD CIRCUIT

With the former DLD amp which has high efficiency, the heatsink can be small, compared with class B amplifier which has the same output power, resulting in high cost performance.

However, the normal listening output power is several mW to several hundred mW and the high voltage circuit seldom operates. For example, with the circuit shown in Fig. 1, the high and low setting is 30W/8Ω to obtain maximum output power of 100W/8Ω. Therefore, at low power of 0~30W, low voltage circuit consisting of Q33, Q35, D2, D9, D11, C70 and C71 functions and high voltage circuit consisting of D1, C72 and C73 operates rarely.

When the high voltage circuit operates, the low voltage circuit does not operate.

With the super DLD circuit, the circuit which is not operated is effectively used to improve performance and tone quality. The operation of the super DLD is described below.

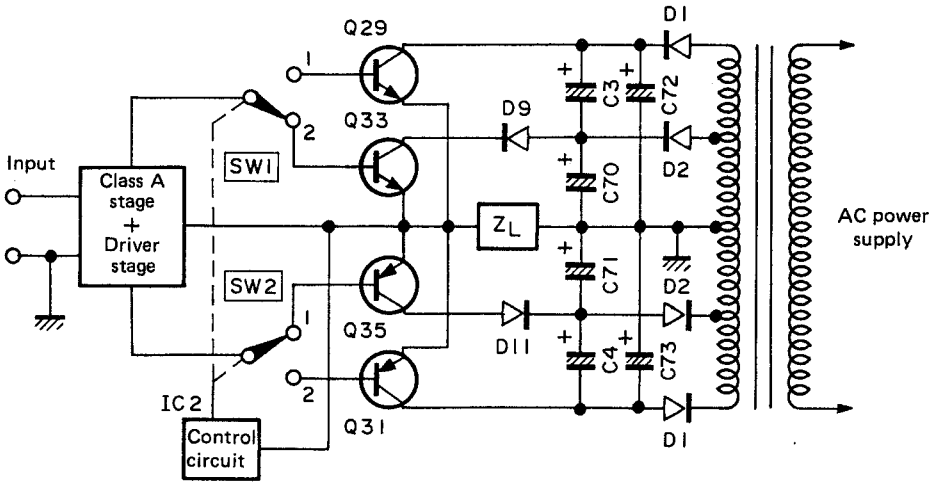

Fig. 1

OPERATIONAL DESCRIPTION

As shown in Fig. 1, C3 and C4 are added to the former DLD circuit to form super DLD circuit. Hereafter, the operation of the amplifier is calss B and the description applies to positive side half cycle.

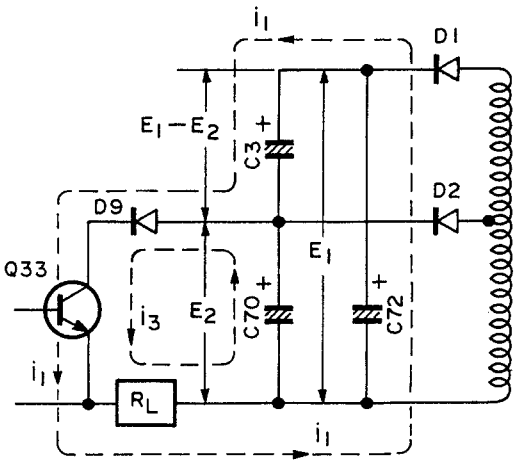

Fig. 2–1

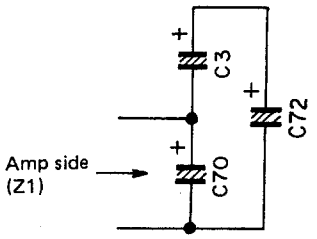

Fig. 2–2

CIRCUIT DESCRIPTION

1. Low power operation

When Q29 opens, the circuit in Fig. 1 can be seen as an equivalent circuit shown in Fig. 2–1.

- At non-signal condition, C3, C70 and C72 are fully charged and voltages E1, E2 and E1–E2 are supplied to C72, C70 and C3 respectively.
- When the signal is applied and Q33 turns on, C70 supplies current i_3 to RL via D9 and Q33 and C72 supplies current i_1 to RL via C3, D9 and C33. Namely, C3 functions as an i_1 bias circuit.
- When this operation is viewed from the amp, the circuit can be described as shown in Fig. 2–2. Namely, the power impedance Z1 viewed from the amp is as follows.

$$Z_1\ (j\omega) = \frac{1}{j\omega} \cdot \frac{C3 + C72}{C3 \cdot C72 + C70\,(C3 + C72)}$$

Assuming that C3 = C70 = C72,

$$Z_1\ (j\omega) = \frac{1}{j\omega} \cdot \frac{1}{\frac{3}{2}C70}$$

Therefore, the curcuit is the same as the former circuit in which C3 and C4 are not employed and C70 is increased by 3/2. The power impedance is decreased by 2/3, to 33%.

Therefore, the AC component at collector voltage of Q33 is decreased, resulting in improved performance and sound quality.

2. High power operation

When Q33 opens, the circuit in Fig. 1 can be seen as an equivalent circuit shown in Fig. 3–1.

- When the signal is supplied and Q29 turns on, the series circuit consisting of C3 and C70 supplies i_3 to RL via Q29 and C72 supplies i_1 to RL via Q29.
- When this operation is viewed from amp, the circuuit can be described as shown in Fig. 3–2. Namely, the power impedance Z2 viewed form the amp is as folows.

$$Z_2\ (j\omega) = \frac{1}{j\omega} \cdot \frac{C3 + C70}{C3 \cdot C70 + C72\,(C3 + C70)}$$

Assuming that C3 = C70 = C72,

$$Z_2\ (j\omega) = \frac{1}{j\omega} \cdot \frac{1}{\frac{3}{2}C72}$$

Therefore, the circuit is the same as the former circuit in which C3 and C4 are not employed and C70 is increased by 3/2. The power impedance is decreased by 2/3, to 33%. Therefore, the AC component at collector voltage of Q29 is decreased, resulting in improved performance and sound quality.

This operation can be applied to the negative side half cycle.

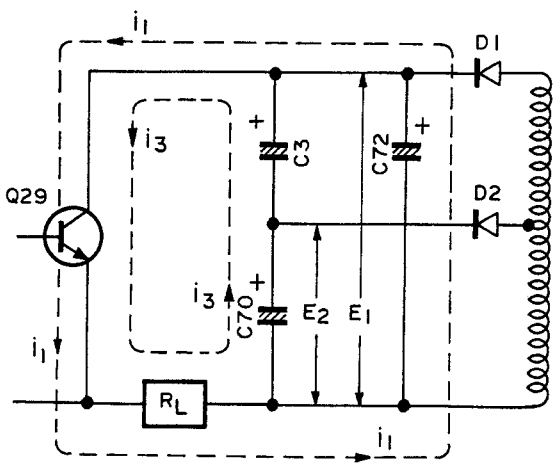

Fig. 3–1

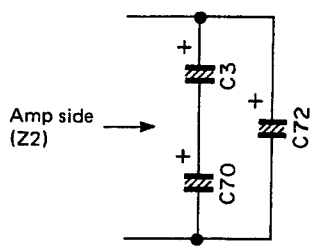

Fig. 3–2

CIRCUIT DESCRIPTION

CHECKING METHOD OF SUPER DLD CIRCUIT OPERATION

1. Connect an oscilloscope to LOW (+B) and GND.
   Set the oscilloscope input coupling mode to AC.

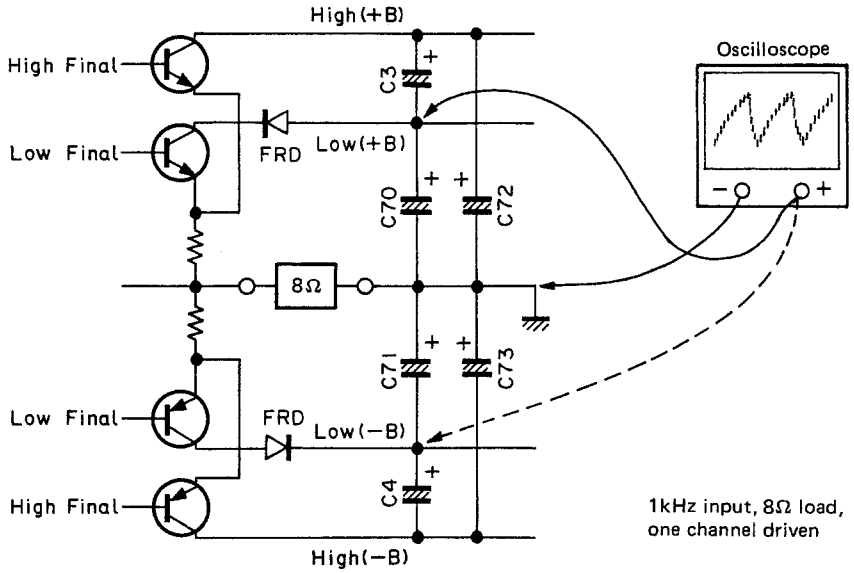

2. Continuously change the output voltage and monitor the ripple waveform at high and low switching.

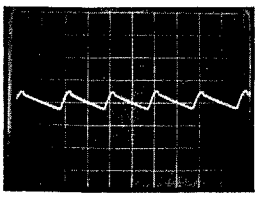

Photo 1
Volume : 0

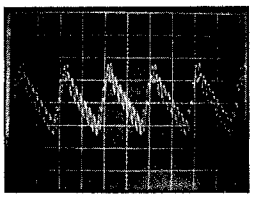

Photo 2
Just before switching

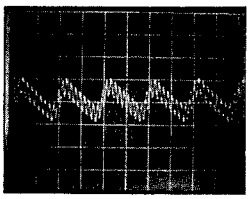

Photo 3
Just after switching

3. Connect the oscilloscope to HIGH (−B) and GND.
   Set the oscilloscope input coupling mode to AC.

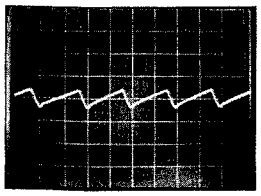

Photo 4
Volume : 0

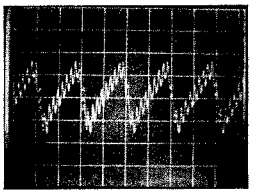

Photo 5
Just before switching

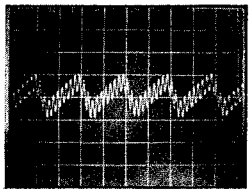

Photo 6
Just after switching

4. Check on the opposite channel's LOW (+B) and HIGH (−B) line in the same way.

CIRCUIT DESCRIPTION

CONSTANT-VOLTAGE POWER SUPPLY CIRCUIT

D9 : RD20J (B2)
A Zener diode (constant-voltage). This generates the reference voltage for this circuit. Even if the current flowing into D9 fluctuates, the voltage at point A is kept constant (Approximately 20.6V.)

C51 : 100μ, 25V
Used as the ripple filter and to prevent the noise generated by D9.

Q27 : 2SD313V-AL
A current amplifier. This is necessary when the load current is large or the capacity (Iz) of the Zener diode is small.

D31 : E-272
A constant-current element. This supply a constant current to the Zener diode to obtain a more constant voltage.

Constant-current characteristics: When the voltage between the gate and source of the FET is 0 (zero) and VDS is between VP~VX, the drain current changes little.

The gate and source of the FET are connected with a constant-current diode (E-272). The anode corresponds to the drain, and the cathode corresponds to the gate and source.

- Constant current diodes E-272 (D27~32) in some preamplifier unit are indicated by the symbols of FET on the silk of the printed circuit board. Insert each of them so that the drain will be connected to the anode and the source to the cathode (See the following figure.)

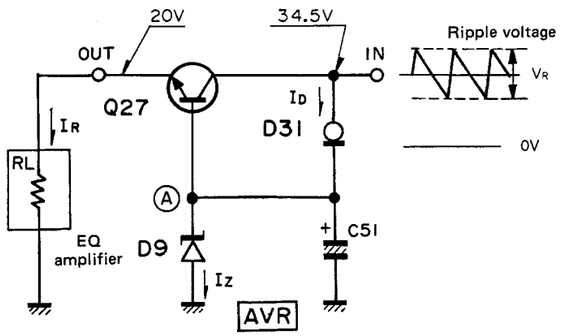

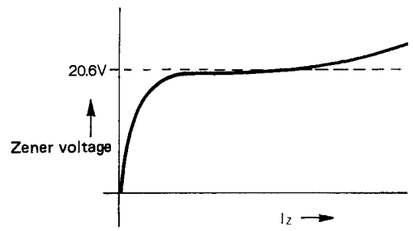

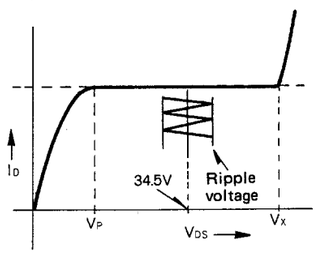

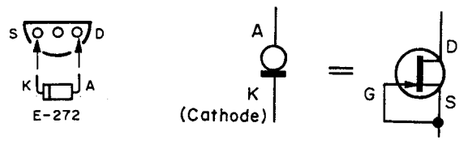

ADJUSTMENT/REGLAGE/ABGLEICH

ADJUSTMENT

No.	ITEM	INPUT SETTINGS	OUTPUT SETTINGS	AMPLIFIER SETTINGS	ALIGNMENT POINTS	ALIGN FOR	FIG.
Unless otherwise specified, the individual switches should be set as follows: SPEAKER: B							
1	OFFSET	–	Connect a DC voltmeter to SPEAKER B terminal.	VOLUME: 0	VR1 (L) VR2 (R)	0V	(a)
2	IDLE CURRENT	–	Connect a DC voltmeter across R85 (L) R86 (R)	VOLUME: 0	VR3 (L) VR4 (R)	9mV	(b)

REGLAGE

N°	ITEM	REGLAGE DE L'ENTREE	REGLAGE DE LA SORTIE	REGLAGE DE L'AMPLIFICATEUR	POINTS DE L'ALIGNMENT	ALIGNER POUR	FIG.
Sauf en cas d'indications spéciales, régler chaque commutateur comme suit: SPEAKER: B							
1	OFFSET	–	Connecter un voltmètre de CC aux bornes de sortie + et – (SPEAKER B)	VOLUME: 0	VR1 (G) VR2 (D)	0V	(a)
2	COURANT DE POLARISATION	–	Connecter un voltmètre de CC SUR R85 (G) R86 (D)	VOLUME: 0	VR3 (G) VR4 (D)	9mV	(b)

ABGLEICH

NR.	GEGENSTAND	EINGANGS-EINSTELLUNG	AUSGANG-EINSTELLUNG	VORSTÄRKER-EINSTELLUNG	ABGLEICHE-PUNKTE	ABGLEICHEEN FÜR	ABB.
Außer wenn anders angegeben, die verschiedenen Schalter wie folgt einstellen: SPEAKER: B							
1	OFFSET	–	Einen Gleichspannungs-messer zu SPEAKER B anschließen.	VOLUME: 0	VR1 (L) VR2 (R)	0V	(a)
2	LEERLAUF-STROM	–	Einen Gleichspannungs-messer über R85 (L) R86 (R) anschließen.	VOLUME: 0	VR3 (L) VR4 (R)	9mV	(b)

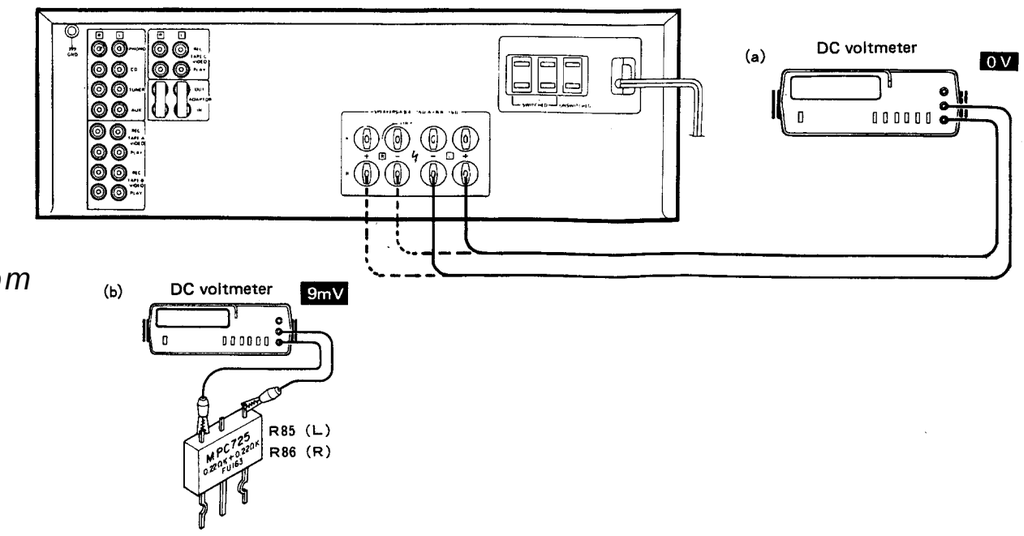

KA-1100SD KA-1100SD

PC BOARD

PRE AMPLIFIER (X08-2160-81)

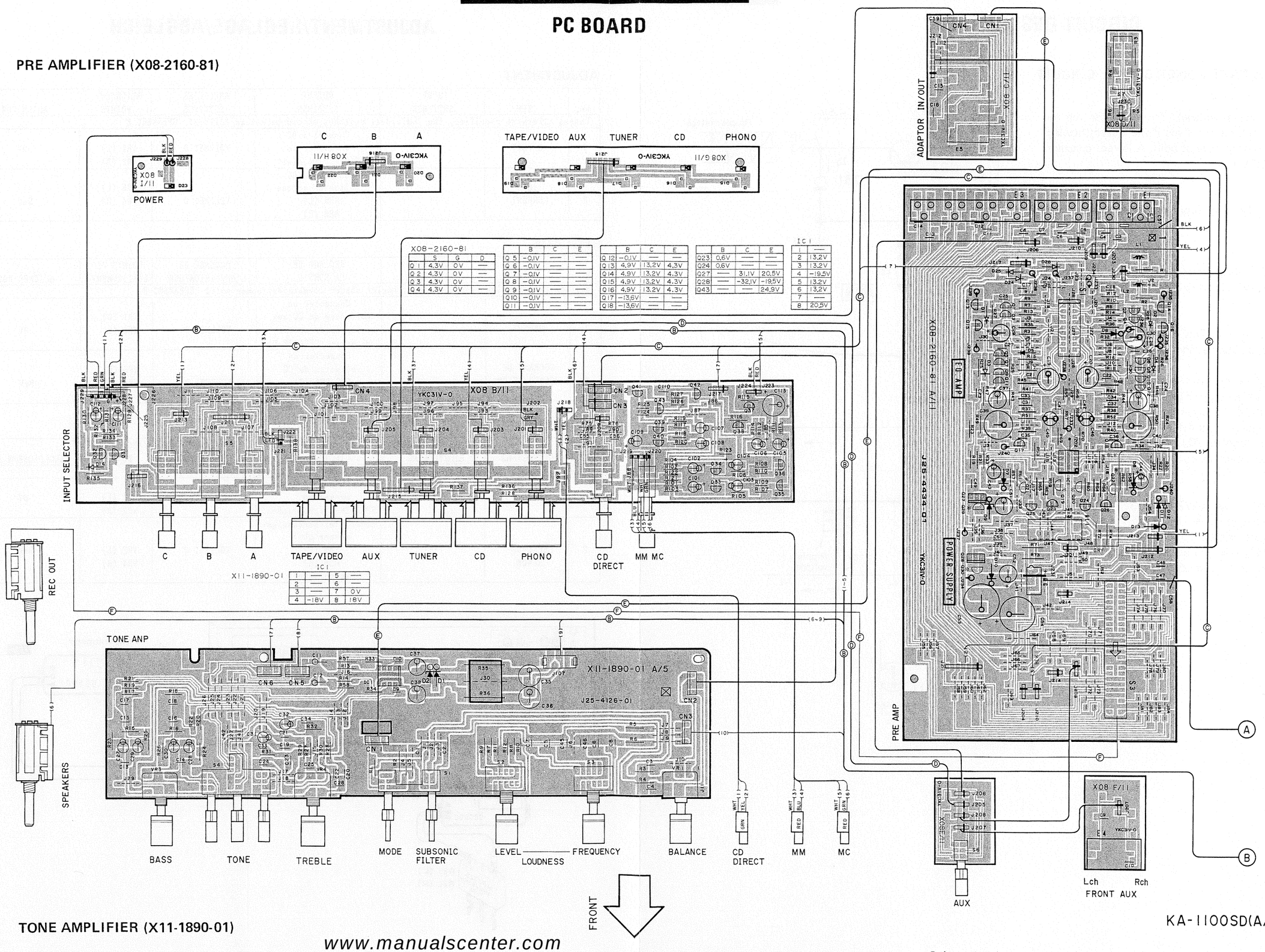

X08-2160-81

	S	G	D
Q 1	4.3V	0V	—
Q 2	4.3V	0V	—
Q 3	4.3V	0V	—
Q 4	4.3V	0V	—

	B	C	E
Q 5	-0.1V	—	—
Q 6	-0.1V	—	—
Q 7	-0.1V	—	—
Q 8	-0.1V	—	—
Q 9	-0.1V	—	—
Q 10	-0.1V	—	—
Q 11	-0.1V	—	—

	B	C	E
Q 12	-0.1V	—	—
Q 13	4.9V	13.2V	4.3V
Q 14	4.9V	13.2V	4.3V
Q 15	4.9V	13.2V	4.3V
Q 16	4.9V	13.2V	4.3V
Q 17	-13.6V	—	—
Q 18	-13.6V	—	—

	B	C	E
Q 23	0.6V	—	—
Q 24	0.6V	—	—
Q 27	—	31.1V	20.5V
Q 28	—	-32.1V	-19.5V
Q 43	—	—	24.9V

IC 1

1	—
2	13.2V
3	13.2V
4	-19.5V
5	13.2V
6	13.2V
7	—
8	20.5V

X11-1890-01

IC 1

1	—	5	—
2	—	6	—
3	—	7	0V
4	-18V	8	18V

TONE AMPLIFIER (X11-1890-01)

KA-1100SD(A/2)

* About Q19 ~ 22, 29, 30 of PER AMP P.C.B. ass'y, refer to Circuit description on page 7.

Refer to the schematic diagram for the values of resistors and capacitors. The PC board drawing is viewing from the side easy to check.

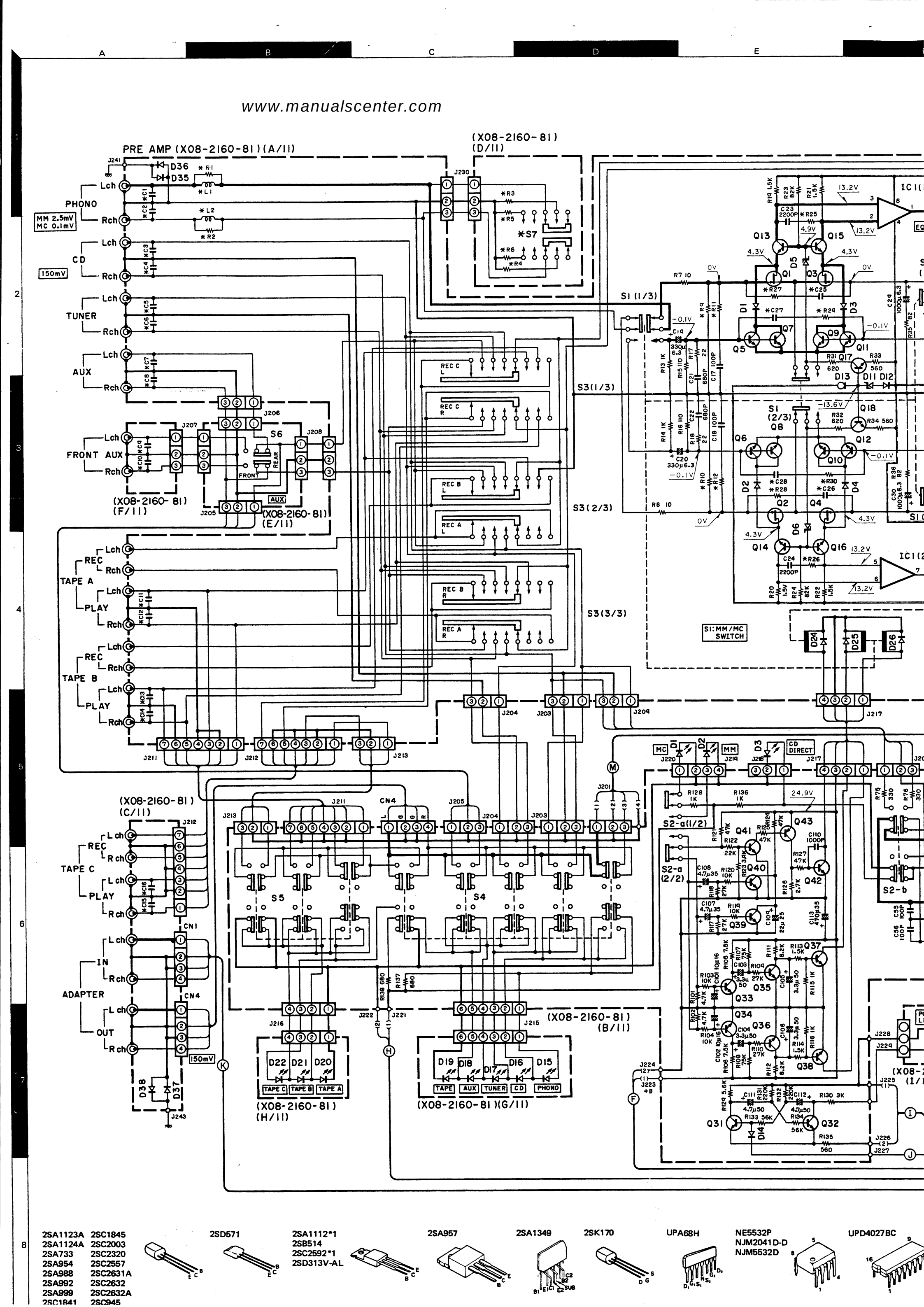

2SA1123A	2SC1845
2SA1124A	2SC2003
2SA733	2SC2320
2SA954	2SC2557
2SA988	2SC2631A
2SA992	2SC2632
2SA999	2SC2632A
2SC1841	2SC945

2SD571

2SA1112*1
2SB514
2SC2592*1
2SD313V-AL

2SA957

2SA1349

2SK170

UPA68H

NE5532P
NJM2041D-D
NJM5532D

UPD4027BC

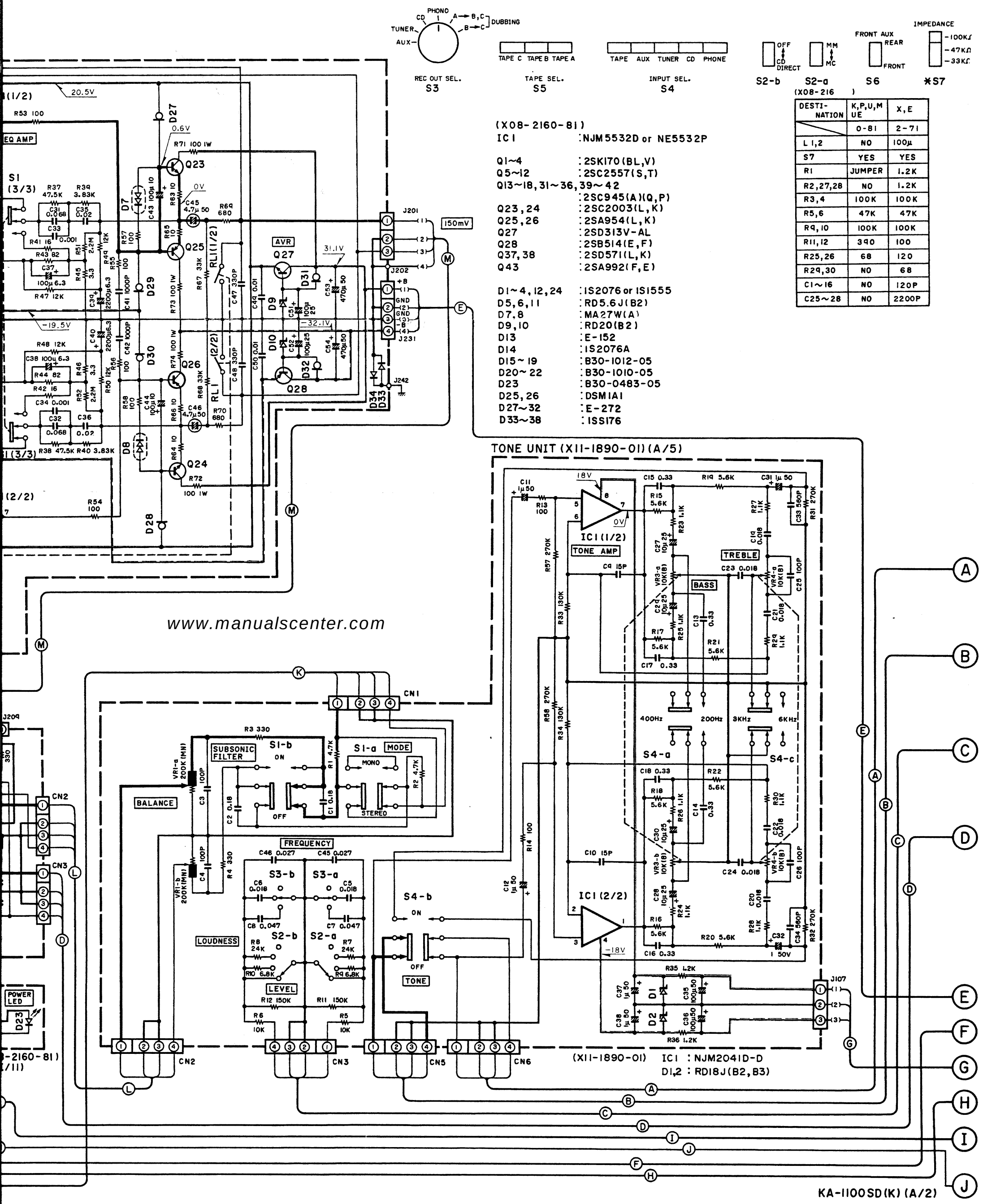

(X08-216)

DESTI-NATION	K,P,U,M UE	X,E
	0-81	2-71
L 1,2	NO	100μ
S7	YES	YES
R1	JUMPER	1.2K
R2,27,28	NO	1.2K
R3,4	100K	100K
R5,6	47K	47K
R9,10	100K	100K
R11,12	390	100
R25,26	68	120
R29,30	NO	68
C1~16	NO	120P
C25~28	NO	2200P

UPC1237H

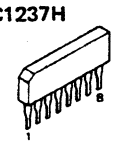

TA2030

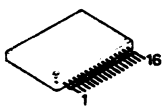

DAT0612N
DAT0612P
DAT1018N
DAT1018P

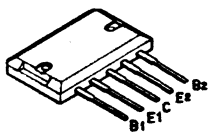

- DC voltages are as measured with a high impedance voltmeter with no signal input. Values may vary slightly due to variations between individual instruments or/and units.

CAUTION: For continued safety, replace safety critical components only with manufacturer's recommended parts (refer to parts list). ⚠Indicates safety critical components. To reduce the risk of electric shock, leakage-current or resistance measurements shall be carried out (exposed parts are acceptably insulated from the supply circuit) before the appliance is returned to the customer.

KA-1100SD

KENWOOD

(X07-2200-11)

IC1,2	:	TA2030
IC3	:	μPC1237H
Q1,2	:	μPA68H
Q3～8	:	2SC1845
Q9,10	:	2SA1349
Q11,12,46	:	2SC2632(Q,R,S)
Q13,14	:	2SC2632A
Q15,16	:	2SC2632(Q,R)
Q17,18	:	2SA1124A
Q19,20	:	2SC1841
Q21,22,43,44	:	2SC2631A
Q23,24	:	2SA1123A
Q25,26	:	2SC2592
Q27,28	:	2SA1112*1
Q29,30	:	DAT1018N
Q31,32	:	DAT1018P
Q33,34	:	DAT0612N
Q35,36	:	DAT0612P
Q37,38	:	2SC2320(F,E)
Q39～42	:	2SA999
Q45	:	2SA988
Q47	:	2SA957
D1～6,17	:	1S2076
D7,8	:	STV-2H
D9～12	:	RU4Z
D13,14,22～25	:	1S2076A
D15,16	:	RD24JB(B3)
D18	:	RD5.6JB(B1)
D19	:	E-102
D20	:	RD16JB(B2)
D21	:	RD22JB(B2)
D26,27	:	DSM1A1

(X07-220)

DESTI-NATION	K,P,U,M,UE	X,E
	0-11	2-71
C3,4	NO	47P
C5,6	470P	100P
C45,46	.047	.1
C47,48	JUMPER	.1
C53,54	.033	.068
C55,56	JUMPER	.068
C57～60	NO	4700P
C19,20	33P	47
C17,18	NO	150P
C21,22	1P	2P
C25,26	18P	15P
R15,16	24	33
R17,18	750	1K
C64,65	470	33
C70,71	6800 50V	6800 56V
C72,73	10000 80V	12000 90V

MAIN AMP (X07-2200-11)

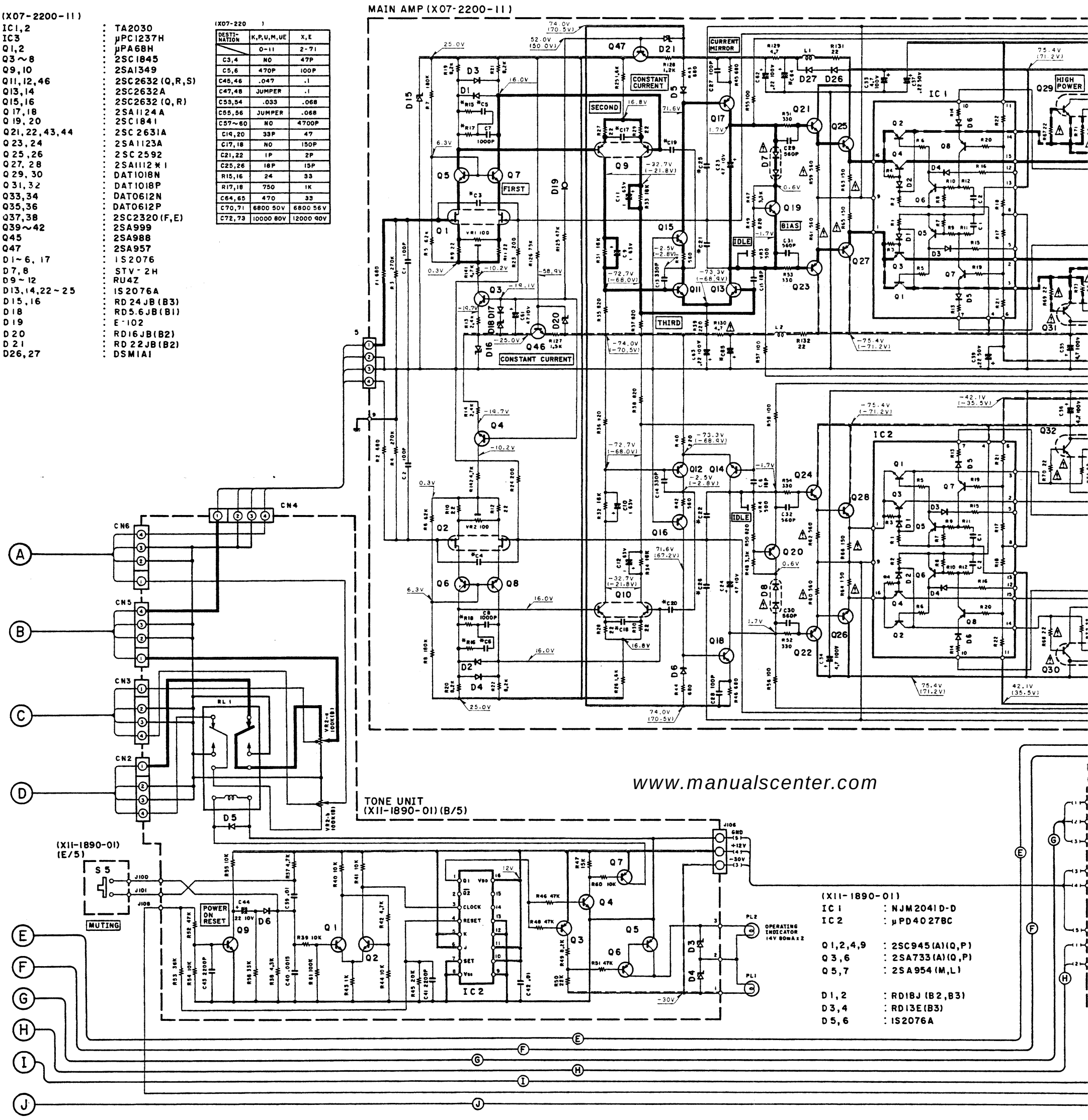

2SA1123A 2SC1845
2SA1124A 2SC2003
2SA733 2SC2320
2SA954 2SC2557
2SA988 2SC2631A
2SA992 2SC2632
2SA999 2SC2632A
2SC1841 2SC945

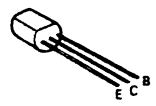

2SD571

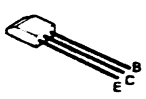

2SA1112*1
2SB514
2SC2592*1
2SD313V-AL

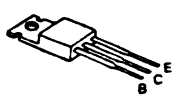

2SA957

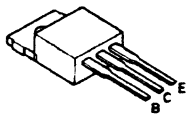

2SA1349

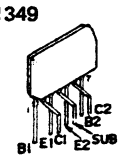

2SK170

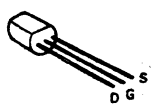

UPA68H

NE5532P
NJM2041D-D
NJM5532D

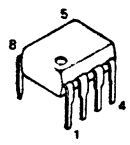

UPD4027BC

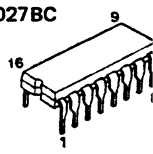

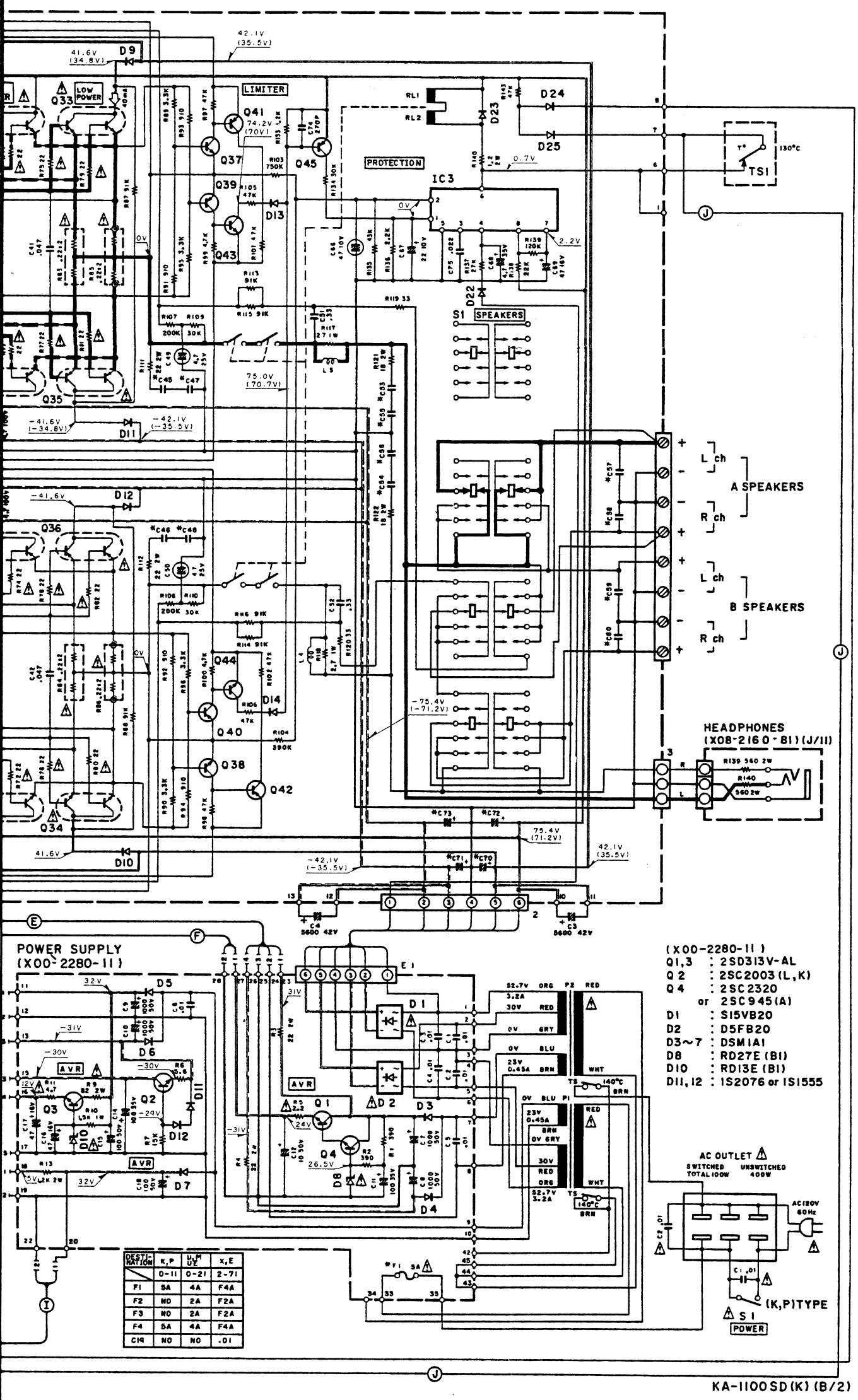

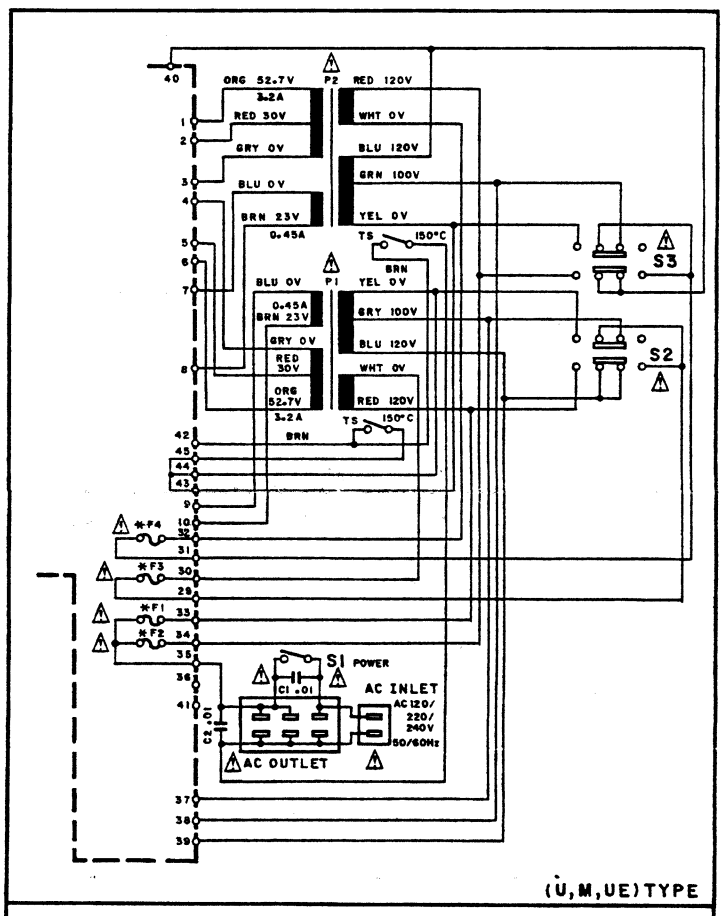

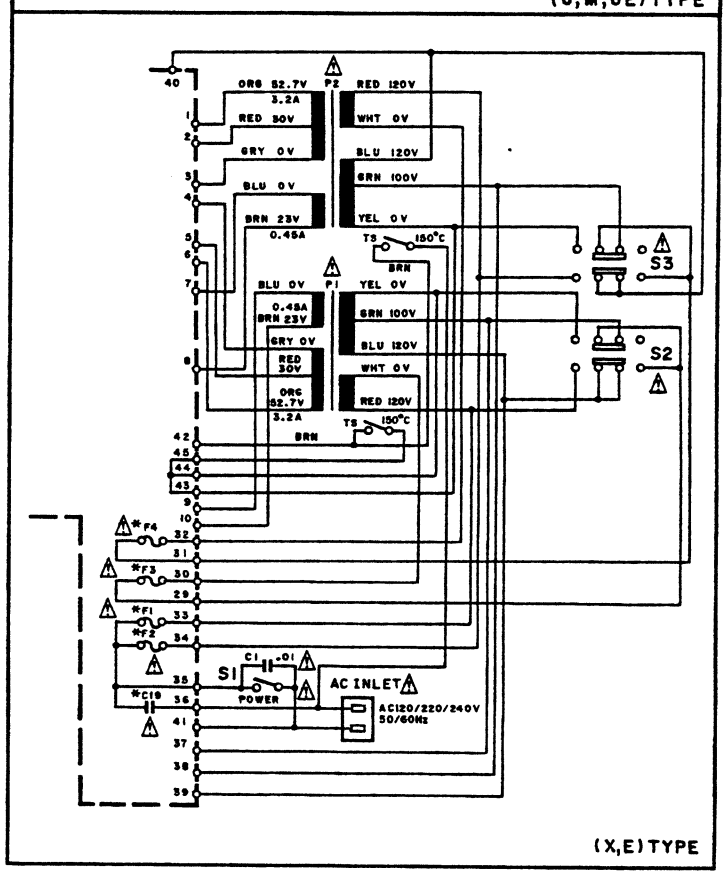

(X00-2280-11)

Q1,3	:	2SD313V-AL
Q2	:	2SC2003(L,K)
Q4	:	2SC2320 or 2SC945(A)
D1	:	S15VB20
D2	:	D5FB20
D3~7	:	DSM1A1
D8	:	RD27E(B1)
D10	:	RD13E(B1)
D11,12	:	1S2076 or 1S1555

UPC1237H

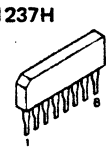

TA2030

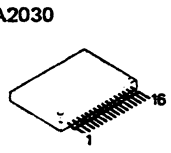

DAT0612N
DAT0612P
DAT1018N
DAT1018P

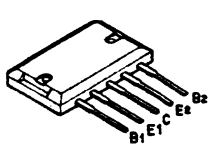

- DC voltages are as measured with a high impedance voltmeter with no signal input. Values may vary slightly due to variations between individual instruments or/and units.

CAUTION: For continued safety, replace safety critical components only with manufacturer's recommended parts (refer to parts list). ⚠Indicates safety critical components. To reduce the risk of electric shock, leakage-current or resistance measurements shall be carried out (exposed parts are acceptably insulated from the supply circuit) before the appliance is returned to the customer.

KA-1100SD

KENWOOD

POWER SUPPLY (X00-2280-11)

PC BOARD

POWER AMPLIFIER (X07-2200-11)

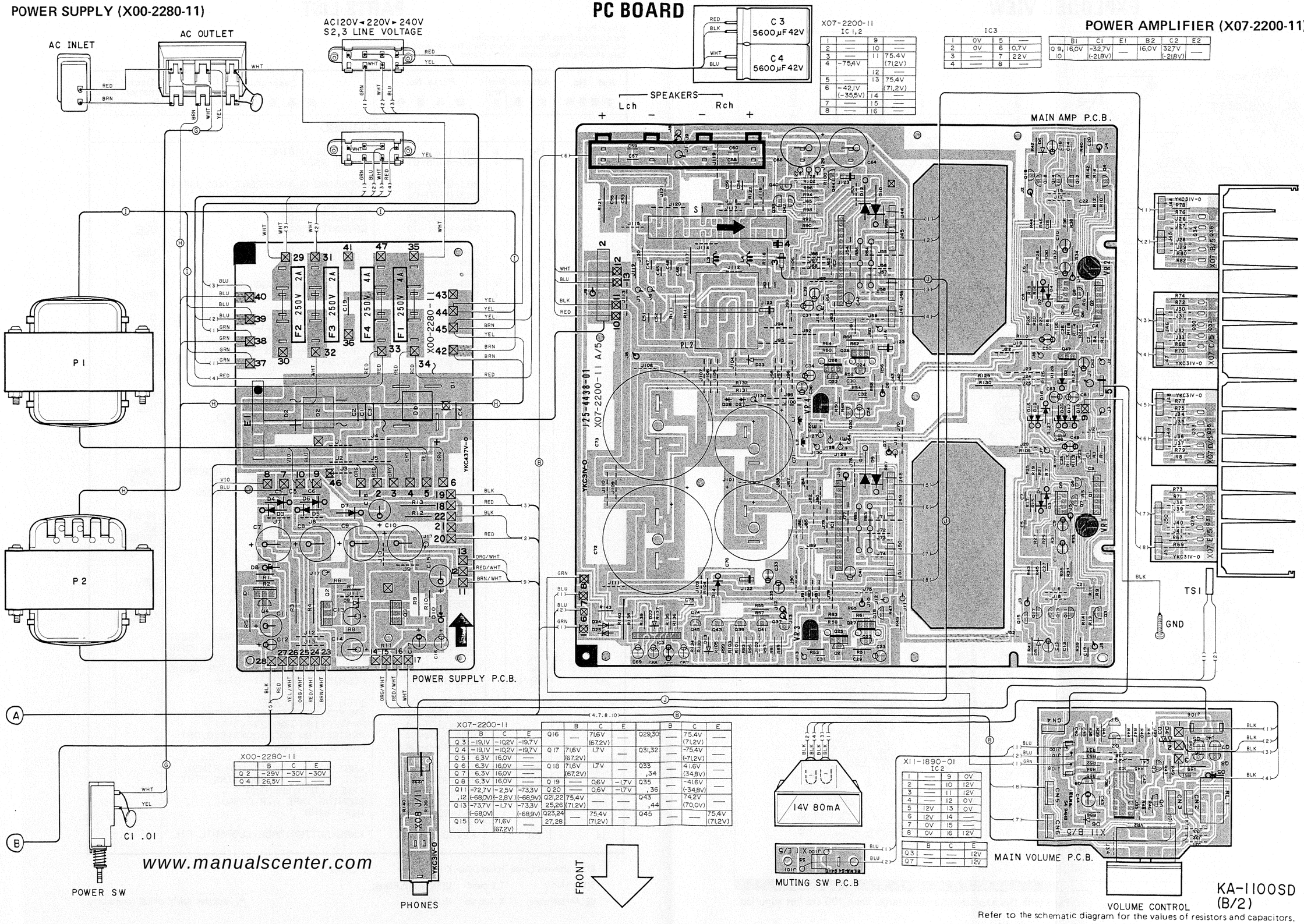

X07-2200-11 IC1,2

1	—	9	—
2	—	10	—
3	—	11	75.4V (71.2V)
4	−75.4V	12	—
5	—	13	75.4V (71.2V)
6	−42.1V (−35.5V)	14	—
7	—	15	—
8	—	16	—

IC3

1	0V	5	—
2	0V	6	0.7V
3	—	7	22V
4	—	8	—

	B1	C1	E1	B2	C2	E2
Q 9, 10	16.0V	−32.7V (−21.8V)	—	16.0V	32.7V (−21.8V)	—

X00-2280-11

	B	C	E
Q 2	−29V	−30V	−30V
Q 4	26.5V	—	—

X07-2200-11

	B	C	E		B	C	E		B	C	E
Q 3	−19.1V	−10.2V	−19.7V	Q16	—	71.6V (67.2V)	—	Q29,30	—	75.4V (71.2V)	—
Q 4	−19.1V	−10.2V	−19.7V	Q17	71.6V (67.2V)	1.7V	—	Q31,32	—	−75.4V (−71.2V)	—
Q 5	6.3V	16.0V	—								
Q 6	6.3V	16.0V	—	Q18	71.6V (67.2V)	1.7V	—	Q33 ,34	—	41.6V (34.8V)	—
Q 7	6.3V	16.0V	—								
Q 8	6.3V	16.0V	—	Q19	—	0.6V	−1.7V	Q35	—	−41.6V (−34.8V)	—
Q11 ,12	−72.7V (−68.0V)	−2.5V (−2.8V)	−73.3V (−68.9V)	Q20	—	0.6V	−1.7V	,36	—	74.2V (70.0V)	—
Q13	−73.7V (−68.0V)	−1.7V	−73.3V (−68.9V)	Q21,22 25,26	75.4V (71.2V)	—	—	Q43 ,44	—	—	—
Q15	0V	71.6V (67.2V)	—	Q23,24 27,28	—	75.4V (71.2V)	—	Q45	—	—	75.4V (71.2V)

X11-1890-01 IC2

1	—	9	0V
2	—	10	12V
3	—	11	12V
4	—	12	0V
5	12V	13	0V
6	12V	14	—
7	0V	15	—
8	0V	16	12V

	B	C	E
Q3	—	—	12V
Q7	—	—	12V

KA-1100SD (B/2)

Refer to the schematic diagram for the values of resistors and capacitors.
The PC board drawing is viewing from the side easy to check.

EXPLODED VIEW

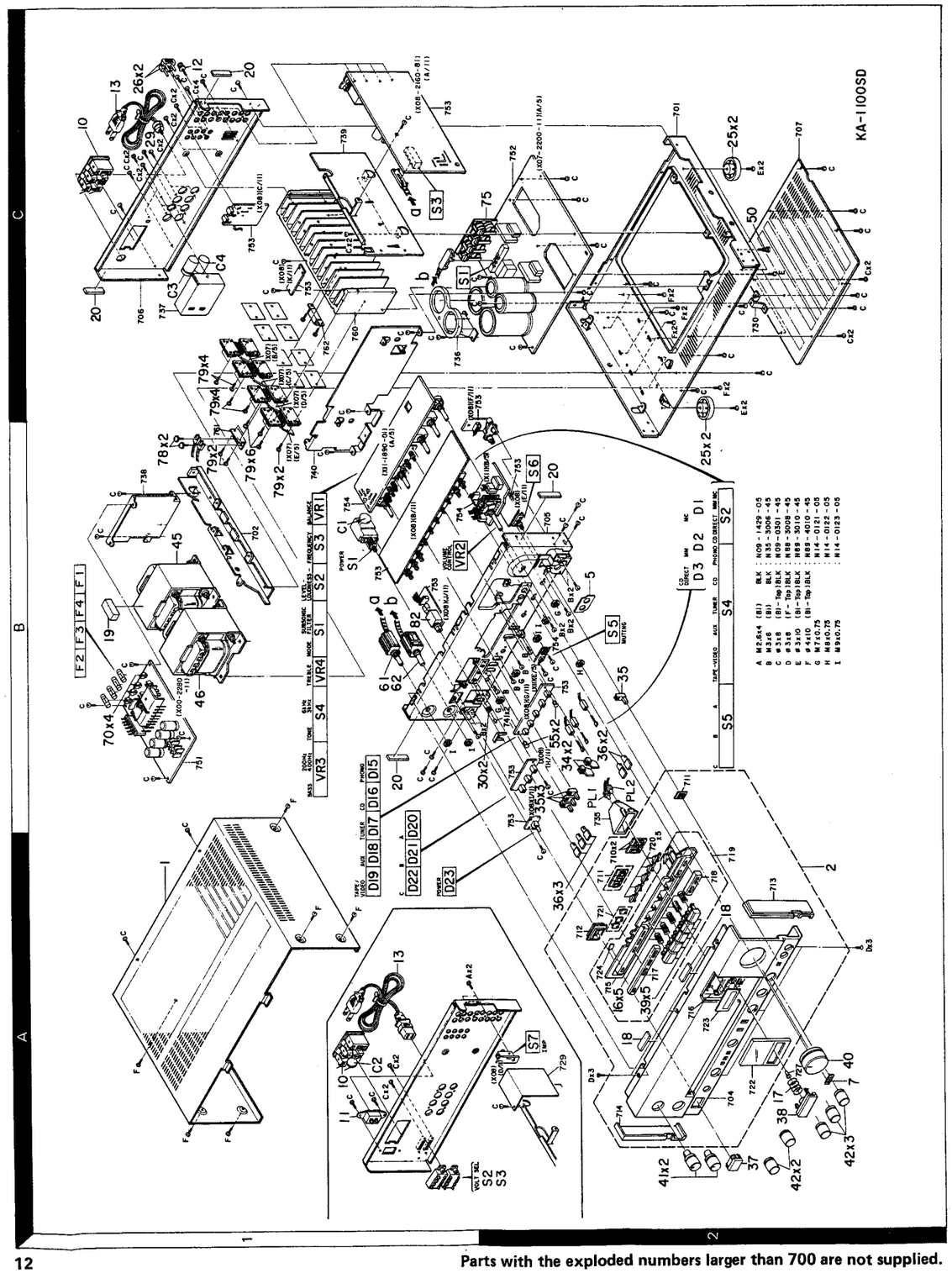

Parts with the exploded numbers larger than 700 are not supplied.

PARTS LIST

* New Parts
Parts without **Parts No.** are not supplied.
Les articles non mentionnes dans le **Parts No.** ne sont pas fournis.
Teile ohne **Parts No.** werden nicht geliefert.

Ref. No. 参照番号	Address 位置	New Parts 新	Parts No. 部品番号	Description 部品名／規格	Destination 仕向	Remarks 備考
			KA-1100SD			
1	1A	*	A01-1341-02	METALLIC CABINET		
2	2A	*	A20-4028-01	PANEL ASSY		
5	2B		B03-0229-04	DRESSING PLATE(FRONT AUX JACK)		
7	2A		B43-0270-04	BADGE(GOLD) SUPER DLD		
-			B46-0092-03	WARRANTY CARD	K	
-			B46-0093-03	WARRANTY CARD	P	
-			B46-0094-03	WARRANTY CARD	UUE	
-			B46-0095-03	WARRANTY CARD	UUE	
-			B46-0096-03	WARRANTY CARD	X	
-			B46-0098-03	WARRANTY CARD	E	
-		*	B50-5335-00	INSTRUCTION MANUAL(ENGLISH)		
-		*	B50-5336-00	INSTRUCTION MANUAL(FRENCH)	PMXE	
-		*	B50-5337-00	INSTRUCTION MANUAL(SPANISH)	M	
-		*	B50-5338-00	INSTRUCTION MANUAL(G,D,I)	E	
-		*	B50-5353-00	INSTRUCTION MANUAL(ARABIC)	M	
-			B58-0222-14	CAUTION CARD(PRESET 220V)	UE	
-			B58-0223-04	CAUTION CARD(PRESET 120V)	U	
-			B58-0245-23	CAUTION CARD(FTZ)	E	
-			B58-0269-04	CAUTION CARD	K	
-			B59-0092-00	SERVICE DIRECTORY	UUE	
D1 ,2	2B		B30-0469-05	LED(SLP-162B)RED(MM,MC)		
D3	2B		B30-0470-05	LED(SLP-262B)GREEN(CD)		
PL1 ,2	2B		B30-0445-15	LAMP(14V 0.08A)MUTING IND		
⚠ C1	1B		C91-0023-05	CERAMIC 0.01UF AC250V	UMUE	
⚠ C2	1A		C91-0647-05	CERAMIC 0.01UF P	KPXE	
C3 ,4	1C	*	C90-1299-05	ELECTRO 5600UF 42WV		
⚠ 10	1C		E03-0069-05	AC OUTLET	KPUM	
⚠ 10	1C		E03-0069-05	AC OUTLET	UE	
⚠ 11	1A		E03-0058-05	AC INLET	UMUEX	
⚠ 11	1A		E03-0058-05	AC INLET	E	
12	1C		E21-0006-25	BINDING POST(GND)		
⚠ 13	1C		E30-0290-05	AC POWER CORD	KP	
⚠ 13	1C		E30-0726-05	AC POWER CORD (INLET)	E	
⚠ 13	1C		E30-0729-05	AC POWER CORD (INLET)	X	
⚠ 13	1C		E30-0852-05	AC POWER CORD (INLET)	UMUE	
16	2A		G01-0488-04	COMPRESSION SPRING(PANEL ASSY)		
17	2A		G01-0489-04	COMPRESSION SPRING(MUTING KNOB		
18	2A		G10-0057-04	NON-WOVEN FABRIC(A20-4028-01AS		
19	1B		G11-0145-04	SOFT TAPE(40X16X12)POWER TRANS		
20	1B,1C		G11-0192-04	CUSHION (40X8X2) SIDE		
-		*	H01-5229-04	ITEM CARTON CASE		
-			H10-1726-12	POLYSTYRENE FOAMED FIXTURE		
-			H25-0078-04	PROTECTION BAG(235X315)		
-			H25-0204-04	PROTECTION BAG(100X315X0.05)		
-			H25-0225-04	PROTECTION BAG		
25	2B,2C	*	J02-0154-05	FOOT (SILVER RING)		
26	1C		J12-0094-05	PIN (SHORTING PIN)		
⚠ 29	1C		J42-0083-05	POWER CORD BUSHING	KP	
30	2B	*	J42-0118-05	BUSHING(TAPE A,B,C SW)		
-			J61-0307-05	WIRE BAND		
34	2B		K27-0915-04	KNOB(BUTTON)MODE,SUBSONIC FIL		

E: Scandinavia & Europe H:Audio Club K: USA P: Canada
S: South Africa T: England U: PX(Far East, Hawaii)
UE: AAFES(Europe) X: Australia M: Other Areas

⚠ indicates safety critical components.

PARTS LIST

* New Parts
Parts without **Parts No.** are not supplied.
Les articles non mentionnes dans le **Parts No.** ne sont pas fournis.
Teile ohne **Parts No.** werden nicht geliefert.

	Ref. No. 参照番号	Address 位置	New Parts 新	Parts No. 部品番号	Description 部品名／規格	Destination 仕向	Remarks 備考
	35	2B		K27-0916-04	KNOB(BUTTON)BASS,TONE,TREB,AUX		
	36	2A,2B		K27-0965-04	KNOB(BUTTON)A,B,C,CD,MM/MC		
	37	2A		K27-1141-04	KNOB(BUTTON)POWER		
	38	2A		K27-1248-13	KNOB(BUTTON)MUTING		
	39	2A		K27-1278-03	KNOB(BUTTON)SELECTOR(PNL ASSY)		
	40	2A	*	K29-1821-04	KNOB VOLUME CONTROL		
	41	2A	*	K29-1822-04	KNOB REC OUT,SPEAKERS		
	42	2A		K29-1823-04	KNOB BASS,TRE,LEV,FREQ,BAL		
⚠	45	1B	*	L01-2911-05	POWER TRANSFORMER	KP	
⚠	45	1B		L01-2916-15	POWER TRANSFORMER	UMUEX	
⚠	45	1B		L01-2916-15	POWER TRANSFORMER	E	
⚠	46	1B	*	L01-2921-05	POWER TRANSFORMER	KP	
⚠	46	1B		L01-2926-15	POWER TRANSFORMER	UMUEX	
⚠	46	1B		L01-2926-15	POWER TRANSFORMER	E	
	50	2C		N09-0292-05	STEPPED SCREW(3X19)GND		
	55	2B		N29-0035-05	PUSH RIVET(3.5X5.5)		
	61	1B		S90-0063-05	REMOTE SWITCH SHAFT(REC OUT)		
	62	1B		S90-0067-05	REMOTE SWITCH SHAFT(SPEAKER)		
⚠	S1	1B		S40-1014-05	PUSH SWITCH (POWER TYPE)	UMUEX	
⚠	S1	1B		S40-1015-05	PUSH SWITCH (POWER TYPE)	KP	
⚠	S1	1B		S40-1047-05	PUSH SWITCH (POWER TYPE)	E	
⚠	S2 ,3	1C		S31-2082-05	SLIDE SWITCH(AC VOLT. SEL)	UMUEX	
⚠	S2 ,3	1C		S31-2082-05	SLIDE SWITCH(AC VOLT. SEL)	E	
	POWER SUPPLY (X00-2280-11)						
	C1 -6			CK45E2H103P	CERAMIC 0.01UF P		
	C7 -10			CE04FW1H102MEL	ELECTRO 1000UF 50WV		
	C11			CE04FW1V101MEL	ELECTRO 100UF 35WV		
	C12			CE04FW1H100MEL	ELECTRO 10UF 50WV		
	C14			CE04FW1V101MEL	ELECTRO 100UF 35WV		
	C15			CE04FW1H101MEL	ELECTRO 100UF 50WV		
	C16 ,17			CE04FW1C470MEL	ELECTRO 47UF 16WV		
	C18			CE04FW1H101MEL	ELECTRO 100UF 50WV		
⚠	C19			C91-0079-05	CERAMIC 0.01UF AC125V	XE	
⚠	F1	1B		F05-4022-05	FUSE 250V 4A	UMUE	
⚠	F1	1B		F05-4024-05	FUSE (SEMKO) 250V F4A	XE	
⚠	F1	1B		F06-5022-05	FUSE (UL) 250V 5A	KP	
⚠	F2 ,3	1B		F05-2023-05	FUSE 250V 2A	UMUE	
⚠	F2 ,3	1B		F05-2029-05	FUSE (SEMKO) 250V F2A	XE	
⚠	F4	1B		F05-4022-05	FUSE 250V 4A	UMUE	
⚠	F4	1B		F05-4024-05	FUSE (SEMKO) 250V F4A	XE	
⚠	F4	1B		F06-5022-05	FUSE (UL) 250V 5A	KP	
	70	1B		J13-0041-05	FUSE CLIP	KPUM	
	70	1B		J13-0041-05	FUSE CLIP	UE	
	70	1B		J13-0054-05	FUSE CLIP	XE	
	R1		*	RD14GB2E391JTS	FL-PROOF RD 390 J 1/4W		
	R2		*	RD14AB2E391JTS	FL-PROOF RD 390 J 1/4W		
	R3 ,4		*	RS14DB3D220JTE	FL-PROOF RS 22 J 2W		
	R5		*	RD14AB2E2R2JTS	FL-PROOF RD 2.2 J 1/4W		
	R6		*	RD14GB2E5R6JTS	FL-PROOF RD 5.6 J 1/4W		
	R7		*	RD14AB2E153JTS	FL-PROOF RD 15K J 1/4W		
	R9		*	RS14DB3D820JTE	FL-PROOF RS 82 J 2W		
	R10		*	RS14DB3A152JTE	FL-PROOF RS 1.5K J 1W		

E: Scandinavia & Europe H:Audio Club K: USA P: Canada
S: South Africa T: England U: PX(Far East, Hawaii)
UE: AAFES(Europe) X: Australia M: Other Areas

⚠ indicates safety critical components

PARTS LIST

* New Parts
Parts without **Parts No.** are not supplied.
Les articles non mentionnes dans le **Parts No.** ne sont pas fournis.
Teile ohne **Parts No.** werden nicht geliefert.

Ref. No. 参照番号	Address 位置	New Parts 新	Parts No. 部品番号	Description 部品名／規格	Destination 仕向	Remarks 備考
R11			RD14AB2E4R7JTS	FL-PROOF RD 4.7 J 1/4W		
R13		*	RS14DB3D122JTE	FL-PROOF RS 1.2K J 2W		
D1			S15VB20	DIODE		
D2			D5FB20	DIODE		
D3 -7			DSM1A1	DIODE		
D8			RD27E(B1)	ZENER DIODE		
D10			RD13E(B1)	ZENER DIODE		
D11 ,12			1S1555	DIODE		
D11 ,12			1S2076	DIODE		
Q1			2SD313V-AL	TRANSISTOR		
Q2			2SC2003(L,K)	TRANSISTOR		
Q3			2SD313V-AL	TRANSISTOR		
Q4			2SC2320	TRANSISTOR		
Q4			2SC945(A)	TRANSISTOR		
POWER AMPLIFIER (X07-2200-11)						
C1 ,2			CC45FSL1H101J	CERAMIC 100PF J	XE	
C1 ,2			CQ09FS1H101JZS	POLYSTY 100PF J	KPUM	
C1 ,2			CQ09FS1H101JZS	POLYSTY 100PF J	UE	
C3 ,4			CC45FSL1H470J	CERAMIC 47PF J	XE	
C5 ,6			CC45FSL1H101J	CERAMIC 100PF J	XE	
C5 ,6			CK45FB1H471K	CERAMIC 470PF K	KPUM	
C5 ,6			CK45FB1H471K	CERAMIC 470PF K	UE	
C7 ,8			CK45FB1H102K	CERAMIC 0.001UF K		
C9 -12			CE04FW1J010MEL	ELECTRO 1.0UF 63WV		
C13 ,14			CK45B2H331K	CERAMIC 330PF K		
C15 ,16			CC45FSL1H180J	CERAMIC 18PF J	XE	
C15 ,16			C91-0169-05	POLYSTY 18PF K	KPUM	
C15 ,16			C91-0169-05	POLYSTY 18PF K	UE	
C19			CC45FSL1H470J	CERAMIC 47PF J	XE	
C19 ,20			CC45FSL1H330J	CERAMIC 33PF J	KPUM	
C19 ,20			CC45FSL1H330J	CERAMIC 33PF J	UE	
C20			CC45FSL1H470J	CERAMIC 47PF J	XE	
C21 ,22			CC45FSL1H010C	CERAMIC 1.0PF C	KPUM	
C21 ,22			CC45FSL1H010C	CERAMIC 1.0PF C	UE	
C21 ,22			CC45FSL1H020C	CERAMIC 2.0PF C	XE	
C23			CE04FW1A470MEL	ELECTRO 47UF 10WV		
C24			CE04FW1A470MEL	ELECTRO 47UF 10WV		
C25 ,26			CC45FSL1H150J	CERAMIC 15PF J	XE	
C25 ,26			C91-0169-05	POLYSTY 18PF K	KPUM	
C25 ,26			C91-0169-05	POLYSTY 18PF K	UE	
C27 ,28			CC45FSL1H101J	CERAMIC 100PF J		
C29 -32			CK45FB1H561K	CERAMIC 560PF K		
C33 -36			CE04FW2A4R7MEL	ELECTRO 4.7UF 100WV		
C37			CE04FW1HR22MEL	ELECTRO 0.22UF 50WV		
C39			CE04FW1HR22MEL	ELECTRO 0.22UF 50WV		
C41 ,42			CF92FV1H473J	MF 0.047UF J		
C45 ,46			CQ93FM1H104J	MYLAR 0.10UF J	XE	
C45 ,46			CQ93FM1H473J	MYLAR 0.047UF J	KPUM	
C45 ,46			CQ93FM1H473J	MYLAR 0.047UF J	UE	
C47 ,48			CQ93FM1H104J	MYLAR 0.10UF J	XE	
C49 ,50			CE04HW1E4R7MEL	NP-ELEC 4.7UF 25WV		
C51 ,52			CQ93FM1H334J	MYLAR 0.33UF J		
C53 ,54			CQ93FM1H333J	MYLAR 0.033UF J	KPUM	
C53 ,54			CQ93FM1H333J	MYLAR 0.033UF J	UE	

E: Scandinavia & Europe H:Audio Club K: USA P: Canada
S: South Africa T: England U: PX(Far East, Hawaii)
UE: AAFES(Europe) X: Australia M: Other Areas

⚠ indicates safety critical components.

PARTS LIST

* New Parts
Parts without **Parts No.** are not supplied.
Les articles non mentionnes dans le **Parts No.** ne sont pas fournis.
Teile ohne **Parts No.** werden nicht geliefert.

Ref. No. 参照番号	Address 位置	New Parts 新	Parts No. 部品番号	Description 部品名／規格	Destination 仕向	Remarks 備考
C53 ,54			CQ93FM1H683J	MYLAR 0.068UF J	XE	
C55 ,56			CQ93FM1H683J	MYLAR 0.068UF J	XE	
C57 -60			CK45FB1H472K	CERAMIC 4700PF K	XE	
C61			CE04FW1A470MEL	ELECTRO 47UF 10WV		
C62 ,63			CE04FW2AR22MEL	ELECTRO 0.22UF 100WV		
C64 ,65		*	CE04FW2A330MEL	ELECTRO 33UF 100WV		
C66			CE04HW1A470MEL	NP-ELEC 47UF 10WV		
C67			CE04FW1A220MEL	ELECTRO 22UF 10WV		
C68			CE04FW1V4R7MEL	ELECTRO 4.7UF 35WV		
C69			CE04GW1C470MEL	LL-ELEC 47UF 16WV		
C70 ,71		*	C90-1305-05	ELECTRO 6800UF 63WV		
C72 ,73		*	C90-1301-05	ELECTRO 12000UF 90WV		
C74			CC45FSL1H271J	CERAMIC 270PF J		
C75			CQ93FM1H223J	MYLAR 0.022UF J		
75	2C		E20-0821-05	LOCK TERMINAL BOARD(8P)SPEAKER		
-			J61-0307-05	WIRE BAND		
L1 ,2			L33-0275-05	CHOKE COIL		
L3 ,4			L39-0085-05	PHASE-COMPENSATION COIL		
78	1B		N09-0287-05	SEMS(TAPTITE SCREW)3X8(VARIST)		
79	1B,1C		N09-1202-05	TAPPING SCREW 3X14(TR)		
R23 ,24		*	RN14BK2C2000FTS	RN 200.0 F 1/6W		
R39 ,40			RD14GB2E221JTS	FL-PROOF RD 220 J 1/4W		
R41 ,42			RD14GB2E561JTS	FL-PROOF RD 560 J 1/4W		
R43 ,44		*	RD14AB2E681JTS	FL-PROOF RD 680 J 1/4W		
R45 ,46			RD14GB2E681JTS	FL-PROOF RD 680 J 1/4W		
R51 -54			RD14GB2E331JTS	FL-PROOF RD 330 J 1/4W		
R59 -62			RD14AB2E561JTS	FL-PROOF RD 560 J 1/4W		
R63 -66			RD14GB2E151JTS	FL-PROOF RD 150 J 1/4W		
R67 ,68			RD14GB2E220JTS	FL-PROOF RD 22 J 1/4W		
R69 -72			RD14AB2E220JTS	FL-PROOF RD 22 J 1/4W		
R73 ,74			RD14GB2E220JTS	FL-PROOF RD 22 J 1/4W		
R75 ,76			RD14AB2E220JTS	FL-PROOF RD 22 J 1/4W		
R77 -80			RD14GB2E220JTS	FL-PROOF RD 22 J 1/4W		
R81 ,82			RD14AB2E220JTS	FL-PROOF RD 22 J 1/4W		
R83 -86			R90-0187-05	MULTI-COMP 0.22X2 K 5W		
R111		*	RS14KB3D220JTE	FL-PROOF RS 22 J 2W		
R112			RS14DB3D220JTE	FL-PROOF RS 22 J 2W		
R113-116		*	RN14BK2C9102FTS	RN 91.0K F 1/6W		
R117		*	RS14KB3A2R7JTE	FL-PROOF RS 2.7 J 1W		
R118		*	RS14DB3A2R7JTE	FL-PROOF RS 2.7 J 1W		
R119,120		*	RD14AB2E330JTS	FL-PROOF RD 33 J 1/4W		
R121,122		*	RS14KB3D180JTE	FL-PROOF RS 18 J 2W		
R127		*	RD14AB2E152JTS	FL-PROOF RD 1.5K J 1/4W		
R128		*	RS14DB3A122JTE	FL-PROOF RS 1.2K J 1W		
R129			RD14AB2E4R7JTS	FL-PROOF RD 4.7 J 1/4W		
R130			RD14GB2E4R7JTS	FL-PROOF RD 4.7 J 1/4W		
R131			RD14AB2E220JTS	FL-PROOF RD 22 J 1/4W		
R132			RD14GB2E220JTS	FL-PROOF RD 22 J 1/4W		
R140		*	RS14KB3D122JTE	FL-PROOF RS 1.2K J 2W		
VR1 ,2			R12-0502-05	TRIMMING POT(100)OFFSET		
VR3 ,4			R12-0302-05	TRIMMING POT(500)IDLE		

E: Scandinavia & Europe H:Audio Club K: USA P: Canada
S: South Africa T: England U: PX(Far East, Hawaii)
UE: AAFES(Europe) X: Australia M: Other Areas

⚠ indicates safety critical components.

PARTS LIST

* New Parts
Parts without **Parts No.** are not supplied.
Les articles non mentionnes dans le **Parts No.** ne sont pas fournis.
Teile ohne **Parts No.** werden nicht geliefert.

Ref. No. 参照番号	Address 位置	New Parts 新	Parts No. 部品番号	Description 部品名／規格	Destination 仕向	Remarks 備考
RL1 ,2			S51-2045-05	MAGNETIC RELAY		
S1	1C		S90-0068-05	SLIDE SWITCH(SPEAKERS)		
TS1		*	S59-1071-05	THERMAL SWITCH		
D1 ,2			1S2076	DIODE		
D3 -6			1S2076	DIODE		
D7 ,8			STV-2H	VARISTOR		
D9 -12			RU4Z	DIODE		
D13 ,14			1S2076A	DIODE		
D15 ,16			RD24J(B2,B3)	ZENER DIODE		
D17			1S2076	DIODE		
D18			RD5.6J(B1)	ZENER DIODE		
D19			E-102	CONSTANT CURRENT DIODE		
D20			RD16J(B2)	ZENER DIODE		
D21			RD22J(B2)	ZENER DIODE		
D22 -25			1S2076A	DIODE		
IC1 ,2			TA2030	IC BUFFER		
IC3			UPC1237H	IC PROTECTION		
Q1 ,2			UPA68H(K,L)	DUAL FET		
Q3 -8			2SC1845	TRANSISTOR		
Q9 ,10		*	2SA1349	DUAL TRANSISTOR		
Q11 ,12			2SC2632(Q,R,S)	TRANSISTOR		
Q13 ,14			2SC2632A	TRANSISTOR		
Q15 ,16			2SC2632(Q,R)	TRANSISTOR		
Q17 ,18			2SA1124A	TRANSISTOR		
Q19 ,20			2SC1841	TRANSISTOR		
Q21 ,22			2SC2631A	TRANSISTOR		
Q23 ,24			2SA1123A	TRANSISTOR		
Q25 ,26		*	2SC2592*1	TRANSISTOR		
Q27 ,28			2SA1112*1	TRANSISTOR		
Q29 ,30			DAT1018N	TRANSISTOR		
Q31 ,32			DAT1018P	TRANSISTOR		
Q33 ,34			DAT0612N	TRANSISTOR		
Q35 ,36			DAT0612P	TRANSISTOR		
Q37 ,38			2SC2320(E,F)	TRANSISTOR		
Q39			2SA999	TRANSISTOR		
Q40 -42			2SA999(E,F)	TRANSISTOR		
Q43 ,44			2SC2631A	TRANSISTOR		
Q45			2SA988	TRANSISTOR		
Q46			2SC2632(Q,R,S)	TRANSISTOR		
Q47			2SA957	TRANSISTOR		
PRE AMPLIFIER (X08-2160-81)						
D15 -19	1A,1B		B30-1012-05	LED(SLP-981C-50) SELECTOR		
D20 -22	1A,1B		B30-1010-05	LED(SLP-281F-50U)TAPE A,B,C		
D23	1A		B30-0483-05	LED(SLP-170B) POWER		
C1 -3			CC45FSL1H121J	CERAMIC 120PF J	XE	
C4			CC45FSL1H121J	CERAMIC 120PF J	XE	
C5			CC45FSL1H121J	CERAMIC 120PF J	XE	
C6 ,7			CC45FSL1H121J	CERAMIC 120PF J	XE	
C8 ,9			CC45FSL1H121J	CERAMIC 120PF J	XE	
C10			CC45FSL1H121J	CERAMIC 120PF J	XE	
C11 -16			CC45FSL1H121J	CERAMIC 120PF J	XE	
C17 ,18			CC45FSL1H101J	CERAMIC 100PF J		
C19 ,20			CE04FW0J331M	ELECTRO 330UF 6.3WV		
C21 ,22			CK45FB1H681K	CERAMIC 680PF K		

E: Scandinavia & Europe H: Audio Club K: USA P: Canada
S: South Africa T: England U: PX(Far East, Hawaii)
UE: AAFES(Europe) X: Australia M: Other Areas

⚠ indicates safety critical components.

PARTS LIST

* New Parts
Parts without **Parts No.** are not supplied.
Les articles non mentionnes dans le **Parts No.** ne sont pas fournis.
Teile ohne **Parts No.** werden nicht geliefert.

Ref. No. 参照番号	Address 位置	New Parts 新	Parts No. 部品番号	Description 部品名／規格	Destination 仕向	Remarks 備考
C23 -28			CK45FB1H222K	CERAMIC 2200PF K	XE	
C23 ,24			CK45FB1H222K	CERAMIC 2200PF K	KPUM	
C23 ,24			CK45FB1H222K	CERAMIC 2200PF K	UE	
C29 ,30		*	CE04FW0J102MEL	ELECTRO 1000UF 6.3WV		
C31 ,32		*	CQ93HP2A683G	MYLAR 0.068UF G		
C33 ,34		*	CQ93HP2A102G	MYLAR 1000PF G		
C35 ,36		*	CQ93HP2A203G	MYLAR 0.020UF G		
C37 ,38			CE04FW1A101MEL	ELECTRO 100UF 10WV		
C39 ,40		*	CE04FW0J222MEL	ELECTRO 2200UF 6.3WV		
C41 ,42			CK45FB1H102K	CERAMIC 0.001UF K		
C43 ,44			CE04FW1A101MEL	ELECTRO 100UF 10WV		
C45 ,46			CE04HW1H4R7MEL	NP-ELEC 4.7UF 50WV		
C47 ,48			CQ09FS1H331JZS	POLYSTY 330PF J		
C49 ,50			CF92FV1H103J	MF 0.010UF J		
C51 ,52			CE04FW1E101MEL	ELECTRO 100UF 25WV		
C53 ,54		*	CE04FW1H471MEL	ELECTRO 470UF 50WV		
C55 ,56			CC45FSL1H101J	CERAMIC 100PF J		
C57			CK45B1H472K	CERAMIC 0.0047UF K		
C58 ,59			CK45B1H471K	CERAMIC 470PF K		
C101,102			CE04FW1C100MEL	ELECTRO 10UF 16WV		
C103-106			CE04FW1H3R3MEL	ELECTRO 3.3UF 50WV		
C107,108			CE04FW1H4R7MEL	ELECTRO 4.7UF 50WV		
C109			CE04FW1E220MEL	ELECTRO 22UF 25WV		
C110			CK45FB1H102K	CERAMIC 0.001UF K		
C111,112			CE04FW1H4R7MEL	ELECTRO 4.7UF 50WV		
C113		*	C90-1297-05	ELECTRO 470UF 35WV		
B2	1B		E11-0103-05	PHONE JACK(HEADPHONE)		
E1		*	E13-0499-05	PHONO JACK(4P)PHONO,CD		
E2			E13-0497-05	PHONO JACK(4P)TUNER,AUX		
E3			E13-0814-05	PHONO JACK(8P)TAPE A,TAPE B		
E4			E13-0225-05	PHONO JACK(2P)FRONT AUX		
E5			E13-0818-05	PHONO JACK(8P)TAPE C,PRE I/O		
L1 ,2			L40-1011-43	SMALL FIXED INDUCTOR(100UH,K)	XE	
R35 ,36		*	RN14BK2E82R0FTS	RN 82.0 F 1/4W		
R37 ,38		*	RN14BK2E4752FTS	RN 47.5K F 1/4W		
R39 ,40		*	RN14BK2E3831FTS	RN 3.83K F 1/4W		
R45 ,46		*	RN14BK2E3R30GTS	RN 3.30 G 1/4W		
R63 -66			RD14GB2E100JTS	FL-PROOF RD 10 J 1/4W		
R71 -74			RS14DB3A101J	FL-PROOF RS 100 J 1W		
R139,140			RS14DB3D561J	FL-PROOF RS 560 J 2W		
RL1			S51-2061-05	REED RELAY		
S1			S90-0065-05	ELECTROMAGNETIC SW MM/MC		
S2	2B	*	S42-2117-05	MULTIPLE PUSH SW(2KEY)CD,MM/MC		
S3	1C	*	S90-0078-05	SLIDE SWITCH REC OUT		
S4	2B		S42-5033-05	MULTIPLE PUSH SW(5KEY)SELECTOR		
S5	2B	*	S42-3086-05	MULTIPLE PUSH SW(3KEY)A,B,C		
S6	2B		S40-2122-05	PUSH SWITCH AUX		
S7	1C		S31-2059-05	SLIDE SWITCH PHONO IMP		
D1 -4			1S1555	DIODE		
D1 -4			1S2076	DIODE		
D5 ,6			RD5.6J(B2)	ZENER DIODE		
D7 ,8			MA27W(A)	VARISTOR		

E: Scandinavia & Europe H:Audio Club K: USA P: Canada
S: South Africa T: England U: PX(Far East, Hawaii)
UE: AAFES(Europe) X: Australia M: Other Areas

⚠ indicates safety critical components.

PARTS LIST

* New Parts
Parts without **Parts No.** are not supplied.
Les articles non mentionnes dans le **Parts No.** ne sont pas fournis.
Teile ohne **Parts No.** werden nicht geliefert.

Ref. No. 参照番号	Address 位置	New Parts 新	Parts No. 部品番号	Description 部品名／規格			Destination 仕向	Remarks 備考
D9 ,10			RD20J(B2)	ZENER DIODE				
D11			RD5.6J(B2)	ZENER DIODE				
D12			1S1555	DIODE				
D12			1S2076	DIODE				
D13		*	E-152	CONSTANT CURRENT DIODE				
D14			1S2076A	DIODE				
D24			1S1555	DIODE				
D24			1S2076	DIODE				
D25 ,26			W06B	DIODE				
D27 -32			E-272	CONSTANT CURRENT DIODE				
D33 -38			1SS176	DIODE				
IC1			NE5532P	IC OP AMP				
IC1			NJM5532D	IC OP AMP				
Q1 -4			2SK170(BL,V)	FET				
Q5 -12			2SC2557(S,T)	TRANSISTOR				
Q13 -18			2SC945(A)(Q,P)	TRANSISTOR				
Q23 ,24			2SC2003(L,K)	TRANSISTOR				
Q25 ,26			2SA954(L,K)	TRANSISTOR				
Q27			2SD313V-AL	TRANSISTOR				
Q28			2SB514(E,F)	TRANSISTOR				
Q31 -36			2SC945(A)(Q,P)	TRANSISTOR				
Q37 ,38			2SD571(L,K)	TRANSISTOR				
Q39 -42			2SC945(A)(Q,P)	TRANSISTOR				
Q43			2SA992(F,E)	TRANSISTOR				
TONE AMPLIFIER (X11-1890-01)								
C1 ,2		*	CQ93AP2A184J	POLYPRO	0.18UF	J		
C3 ,4			CQ09FS1H101JZS	POLYSTY	100PF	J		
C5 ,6			CQ93FM1H183K	MYLAR	0.018UF	K		
C7 ,8			CQ93FM1H473K	MYLAR	0.047UF	K		
C9 ,10			CC45FSL1H150J	CERAMIC	15PF	J		
C11 ,12			CE04FW1H010MEL	ELECTRO	1.0UF	50WV		
C13 -18		*	CQ93FM1H334K	MYLAR	0.33UF	K		
C19 -21			CQ93FM1H183K	MYLAR	0.018UF	K		
C22 ,23			CQ93FM1H183K	MYLAR	0.018UF	K		
C24			CQ93FM1H183K	MYLAR	0.018UF	K		
C25			CC45FSL1H101J	CERAMIC	100PF	J		
C26			CC45FSL1H101J	CERAMIC	100PF	J		
C27 -30			CE04FW1E100MEL	ELECTRO	10UF	25WV		
C31 ,32			CE04FW1H010MEL	ELECTRO	1.0UF	50WV		
C33 ,34			CK45FB1H561K	CERAMIC	560PF	K		
C35 ,36			CE04FW1H101MEL	ELECTRO	100UF	50WV		
C37 ,38			CE04FW1H010MEL	ELECTRO	1.0UF	50WV		
C39			CK45FF1H103Z	CERAMIC	0.01UF	Z		
C40			CK45FB1H152K	CERAMIC	1500PF	K		
C41			CK45FB1H222K	CERAMIC	2200PF	K		
C42			CK45FF1H103Z	CERAMIC	0.01UF	Z		
C43			CK45FB1H222K	CERAMIC	2200PF	K		
C44			CE04FW1A220MEL	ELECTRO	22UF	10WV		
C45 ,46			CQ93FM1H273J	MYLAR	0.027UF	J		
–			J61-0307-05	WIRE BAND				
R1 ,2		*	RN14BK2E4701FTS	RN	4.70K	F 1/4W		
R3 ,4		*	RN14BK2E3300FTS	RN	330.0	F 1/4W		
R5 ,6		*	RN14BK2E1002FTS	RN	10.0K	F 1/4W		
R35 ,36			RS14GB3D122JMA	FL-PROOF RS	1.2K	J 2W		

E: Scandinavia & Europe H:Audio Club K: USA P: Canada
S: South Africa T: England U: PX(Far East, Hawaii)
UE: AAFES(Europe) X: Australia M: Other Areas

⚠ indicates safety critical components.

PARTS LIST

* New Parts
Parts without **Parts No.** are not supplied.
Les articles non mentionnes dans le **Parts No.** ne sont pas fournis.
Teile ohne **Parts No.** werden nicht geliefert.

Ref. No. 参照番号	Address 位置	New Parts 新	Parts No. 部品番号	Description 部品名／規格	Destination 仕向	Remarks 備考
VR1	1B		R06-5098-05	POTENTIOMETER(200KX2)BALANCE		
VR2	1B	*	R08-5053-05	POTENTIOMETER(100KX2)VOLUME		
VR3 ,4	1B		R06-3032-05	POTENTIOMETER(10KX2) BASS,TREB		
RL1		*	S51-2072-05	MAGNETIC RELAY		
S1	1B		S42-2082-05	MULTI PUSH SW(MODE,SUBSONIC)		
S2	1B		S29-2026-05	ROTARY SWITCH(LOUDNESS LEVEL)		
S3	1B		S29-2025-05	ROTARY SWITCH(LOUDNESS FREQ)		
S4	1B		S42-3064-05	MULTI PUSH SW(TONE,TURN FREQ)		
S5	2B		S40-1065-05	PUSH SWITCH (MUTING)		
D1 ,2		*	RD18J(B2,B3)	ZENER DIODE		
D3 ,4		*	RD13E(B3)	ZENER DIODE		
D5 ,6			1S2076A	DIODE		
IC1			NJM2041D-D	IC OP AMP		
IC2			UPD4027BC	IC J-K FLIP-FLOP		
Q1 ,2			2SC945(A)(Q,P)	TRANSISTOR		
Q3			2SA733(A)(Q,P)	TRANSISTOR		
Q4			2SC945(A)(Q,P)	TRANSISTOR		
Q5			2SA954(M,L)	TRANSISTOR		
Q6			2SA733(A)(Q,P)	TRANSISTOR		
Q7			2SA954(M,L)	TRANSISTOR		
Q9			2SC945(A)(Q,P)	TRANSISTOR		

E: Scandinavia & Europe H:Audio Club K: USA P: Canada
S: South Africa T: England U: PX(Far East, Hawaii)
UE: AAFES(Europe) X: Australia M: Other Areas

⚠ indicates safety critical components.

KA-1100SD

SPECIFICATIONS

Power Amplifier Section

Power Output

150 watts* per channel minimum RMS, both channels driven at 8 ohms from 20 Hz to 20,000 Hz with no more than 0.004% total harmonic distortion.

Both Channels Driven into 8 ohms at 1 kHz	160 W + 160W
Dynamic Power Output into 4 ohms	368 W
Total Harmonic Distortion (20 Hz to 20,000 Hz) AUX input to SPEAKER output	0.004% at rated power into 8 ohms 0.003% at 1/2 rated power into 8 ohms
Intermodulation Distortion (60 Hz : 7 kHz = 4 : 1)	0.003% at rated power into 8 ohms
Damping Factor	1,000 at 50 Hz
Transient Response	
Rise Time	1.7 μs
Slew Rate	±100 V/μs
Frequency Response	DC to 200 kHz + 0 dB, − 3dB
Speaker impedance	Accept 4 ohms to 16 ohms
Input Sensitivity/Impedance	
Phono MM	2.5 mV/47k ohms and 100 k ohms
Phono MC	0.1mV/100 ohms
Tuner, AUX, Tape Adaptor in	150 mV/47 k ohms
Signal-to-Noise Ratio (IEC-A)	
Phono MM	88 dB or 2.5mV input
Phono MC	70 dB for 100 μV input
Tuner, AUX, Tape	108 dB
Maximum Input Level for Phono	
MM	200 mV (RMS), T.H.D. 0.003% at 1,000 Hz
MC	8 mV (RMS), T.H.D. 0.003% at 1,000 Hz
Output Level/Impedance	
Tape REC (Pin), Adaptor out	150 mV/680 ohms
Frequency Response for Phono	RIAA standard curve ±0.2dB (20 Hz to 20,000 Hz)
Tone Control	
Bass	±10 dB at 50 Hz, 100 Hz
Treble	±10 dB at 10 kHz, 20 kHz
Loudness Control (at − 30 dB VOLUME Level)	+ 3/6/9 dB at 30/60/90 Hz
Subsonic Filter	18 Hz, 6 dB/oct.

General

Power Consumption	4 A (U.S.A. and Canada) 550 W (European countries) 1500 W (Others)
AC Outlets	Switched 2, Unswitched 1 (Except U.K., European, Australian Countries)
Dimensions	W : 440 mm (17-5/16") H : 158 mm (6-7/32") D : 383 mm (15-3/32")
Weight (Net)	14.7 kg (32.3 lb)

* Measured pursuant to Federal Trade Commission's Trade Regulation rule on Power Output Claims for Amplifier in U.S.A.

Note:

We follow a policy of continuous advancements in development. For this reason specifications may be changed without notice.

Note:

Component and circuitry are subject to modification to insure best operation under differing local conditions. This manual is based on, the U.S. (K) standard, and provides information on regional circuit modification through use of alternate schematic diagrams, and information on regional component variations through use of parts list.

TRIO-KENWOOD CORPORATION
Shionogi Shibuya Building, 17-5, 2-chome Shibuya, Shibuya-ku, Tokyo 150, Japan

KENWOOD ELECTRONICS
1315 E. Watsoncenter Rd, Carson, California 90745, U.S.A.
75 Seaview Drive, Secaucus, New Jersey 07094, U.S.A.

TRIO-KENWOOD CANADA INC.,
1070 Jayson Court, Mississauga, Ontario, Canada L4W 2V5

TRIO-KENWOOD ELECTRONICS, N.V.
Leuvensesteenweg 504 B-1930 Zaventem, Belgium

TRIO-KENWOOD ELECTRONICS GmbH
Rudolf-Brass-Str. 20, 6056 Heusenstamm, West Germany

TRIO-KENWOOD FRANCE S.A.
5, Boulevard Ney, 75018 Paris, France

TRIO-KENWOOD (AUSTRALIA) PTY. LTD. (INCORPORATED IN NSW)
4E Woodcock Place, Lane Cove, N.S.W. 2066, Australia

KENWOOD & LEE ELECTRONICS, LTD.
Wang Kee Building, 5th Floor, 34-37, Connaught Road, Central, Hong Kong

© 1984-7 PRINTED IN JAPAN B51-1640-00 (D) 2821