STEREO INTEGRATED AMPLIFIER

KA-57

SERVICE MANUAL

KENWOOD

©1988-4 PRINTED IN JAPAN
B51-3556-00(T)1698

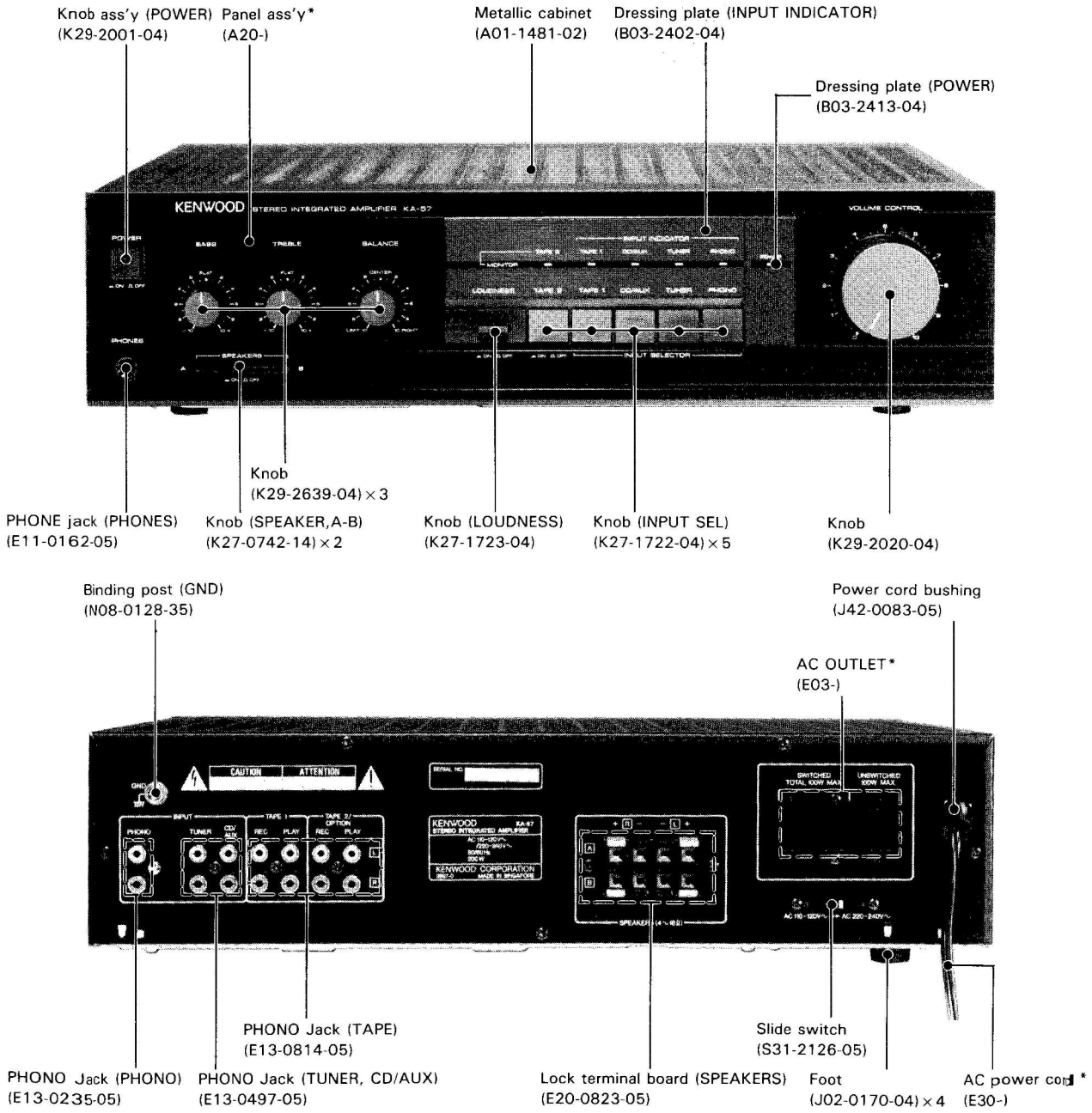

*** Refer to parts list on page 18.**
Photo is KA-57.

KA-57

CONTENTS

DISASSEMBLY FOR REPAIR 2
BLOCK & LEVEL DIAGRAM 3
CIRCUIT DESCRIPTION 4
ADJUSTMENT/REGLAGES/ABGLEICH 5
VOLTAGE TABLES 6
PC BOARD (Component side view) 7
PC BOARD (Foil side view) 10
CIRCUIT DIAGRAM 13
EXPLODED VIEW 17
PARTS LIST 18
SPECIFICATIONS ..... Back cover

DISASSEMBLY FOR REPAIR

1. Remove the metallic cabinet before this operation.
2. Remove the 6 screws fixing the front panel to the sub panel (❶).
3. Remove the front panel in the direction of the arrow (❷).
4. Remove the 4 knobs from the BASS, TREBLE, BALANCE and VOLUME CONTROL (❸).
5. Remove the 4 hex. nuts from the BASS, TREBLE, BALANCE and VOLUME CONTROL shafts (❹).
6. Pull out the 2 buttons from the SPEAKERS shafts (❺).
7. Remove the 2 screws fixing the escutcheon to the sub panel (❻).
8. Remove the escutcheon in the direction of the arrow (❼).
9. Remove the Audio Unit (X09-) (E/5) in the direction of the arrow (❽).

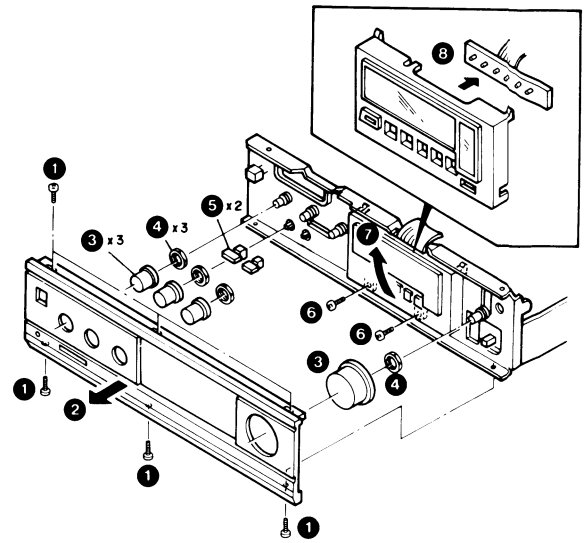

10. Remove the 5 screws on the sub panel (❾).
11. Remove the sub panel in the direction of the arrow (❿).
12. Remove the Audio Unit (X09-) (C/5) and Tone Unit (X11-) (⓫).
13. Disengage the claws of the PHONES jack (⓬).
14. Remove the Audio Unit (X09-) (B/5) (⓭).

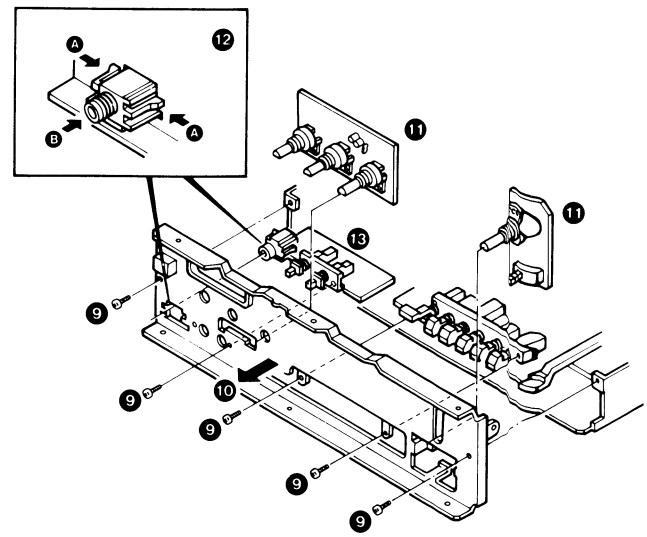

BLOCK & LEVEL DIAGRAM

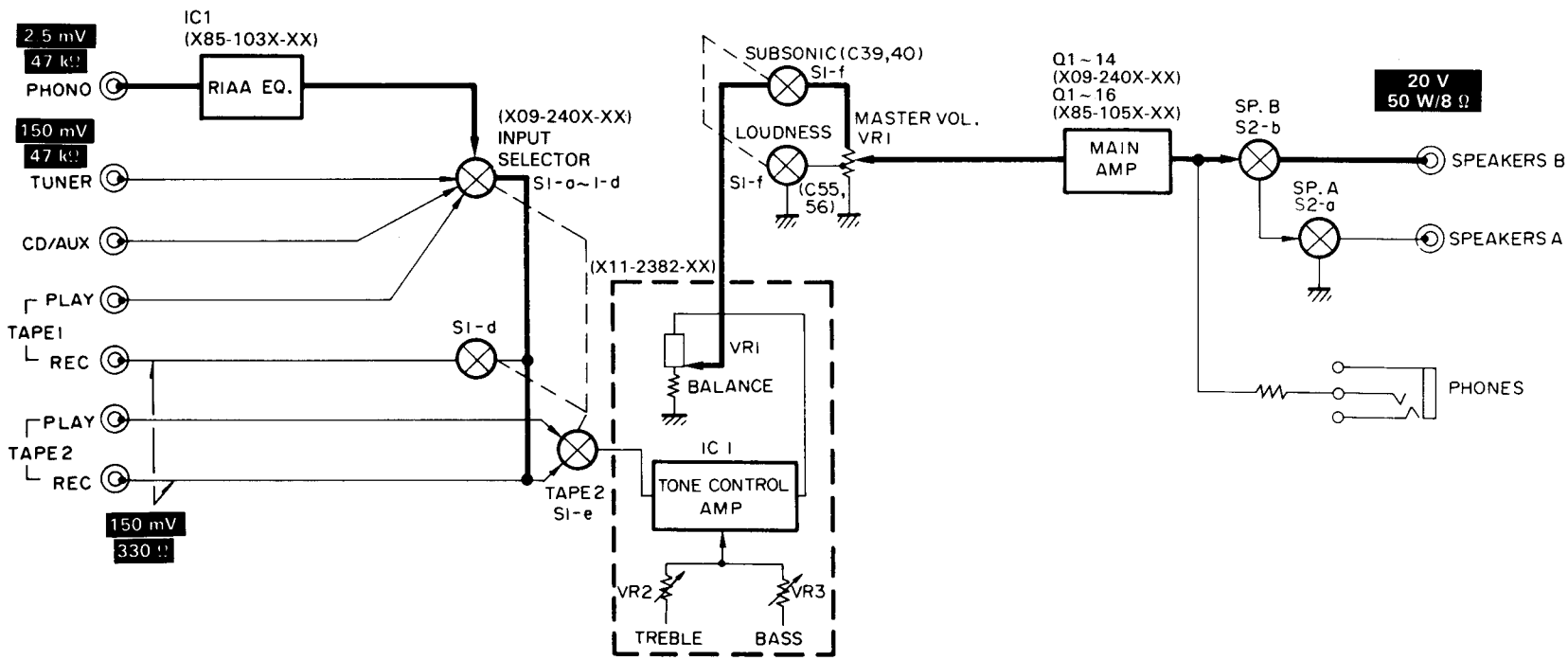

KA-57

CIRCUIT DESCRIPTION

UNIT-DESTINATION

	E	X, T, M, P		
POWER SUPPLY X00-239X-XX	0-51 (0-52)	X,T 0-51 (0-52)	M 0-81 (0-83)	P 1-01 (1-02)
TONE UNIT	X11-2382-70 (X11-2382-71)	← ←		
AUDIO UNIT	X09-2402-72 (X09-2632-72)	X09-2400-22 (X09-2630-22)		
PRE AMP UNIT	X85-1032-72 (X85-1112-71)	X85-1030-11 (X85-1110-10)		
MAIN AMP UNIT	X85-1050-12 (X85-1052-72)	X85-1050-12 (X85-1050-14)		

( ) SINGAPORE MADE

DESCRIPTION OF COMPONENTS

Audio unit (X09-240X-XX or X09-263X-XX)

Component	Application/function	Operation/condition/compatibility
Q1	+ voltage regulation	
Q2	− voltage regulation	
Q3, 4	Thermal compensation	C4137: High β transistor. (hfe 560 or more)
Q5-8	Driver	
Q9-12	Final stage power amp	
Q13, 14	Over current protection	
Q15, 16	Meter drive	
IC1 (UPC1237HA)	Protection IC	

Tone unit (X11-2382-XX)

Component	Application/function	Operation/condition/compatibility
IC1 (UPC4570C)	Tone amp	Output configuration tone amp.

Preamplifier unit (X85-103X-XX or X85-111X-XX)

Component	Application/function	Operation/condition/compatibility
IC1 (AN6556)	EQ amplifier	For phono.

Power amplifier unit (X85-105X-XX)

Component	Application/function	Operation/condition/compatibility
Q1-4	Class A 1st stage differential amp	
Q5-8	2nd stage differential amp	
Q9, 10	Class A amp	
Q11-14	3rd stage differential amp	2SC1904.
Q15, 16	Current mirror circuit	2SA899.

ADJUSTMENT/REGLAGES/ABGLEICH

ADJUSTMENT

No.	ITEM	INPUT SETTINGS	OUTPUT SETTINGS	AMPLIFIER SETTINGS	ALIGNMENT POINTS	ALIGN FOR	FIG.
1	IDLE CURRENT	–	Connect a DC voltmeter across CP1 (L) CP2 (R)	VOLUME: 0	VR1 (L) VR2 (R)	3mV	(a)

REGLAGES

N°	ITEM	REGLAGE DE L'ENTREE	REGLAGE DE LA SORTIE	REGLAGE DE L'AMPLIFICATEUR	POINS L'ALIGNEMENT	ALIGNER POUR	FIG.
1	COURANT DE POLARISATION	–	Connecter un voltmètre de CC sur CP1 (G) CP2 (D)	VOLUME: 0	VR1 (G) VR2 (D)	3mV	(a)

ABGLEICH

NR.	GEGENSTAND	EINGANGS-EINSTELLUNG	AUSGANGS-EINSTELLUNG	VERSTÄRKER EINSTELLUNG	ABGLEICH-PUNKTE	ABGLEICHEN FÜR	ABB.
1	LEERLAUFSTROM	–	Einen Gleichspannungs-messer ber CP1 (L) CP2 (R) anschließen.	VOLUME: 0	VR1 (L) VR2 (R)	3mV	(a)

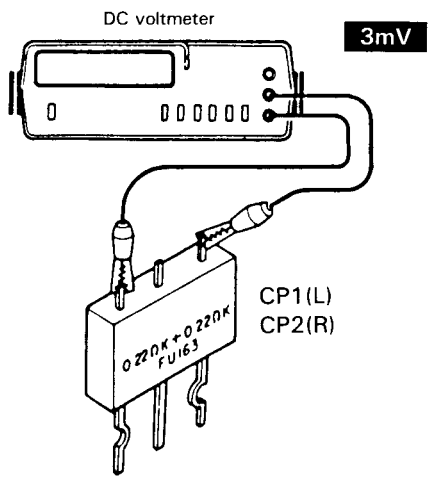

(a)

VOLTAGE TABLES

X85-103X-XX
X85-111X-XX

IC1

4	−18.8V
8	18.3V

X09-240X-XX
X09-263X-XX

Q3,4

E	−1.2V
C	1.2V
B	—

Q5,6

E	—
C	47V
B	—

Q7,8

E	—
C	−47V
B	—

Q9,10

E	—
C	47V
B	—

Q11,12

E	—
C	−47V
B	—

IC1

4	1.8V
6	0.75V
7	2.2V
8	3.3V

X85-105X-XX

Q1~4

E	0V
C	17V
B	—

Q5, 6

E	17.6V
C	−11.3V
B	17V

Q7, 8

E	17.6V
C	—
B	17V

Q9,10

E	−0.6V
C	45.2V
B	—

Q11,12

E	−49.1V
C	−0.6V
B	−48.5V

Q13,14

E	−49.1V
C	−1.2V
B	—

X11-2382-70
X11-2382-71

IC1

4	−16V
8	16V

PC BOARD (Component side view)

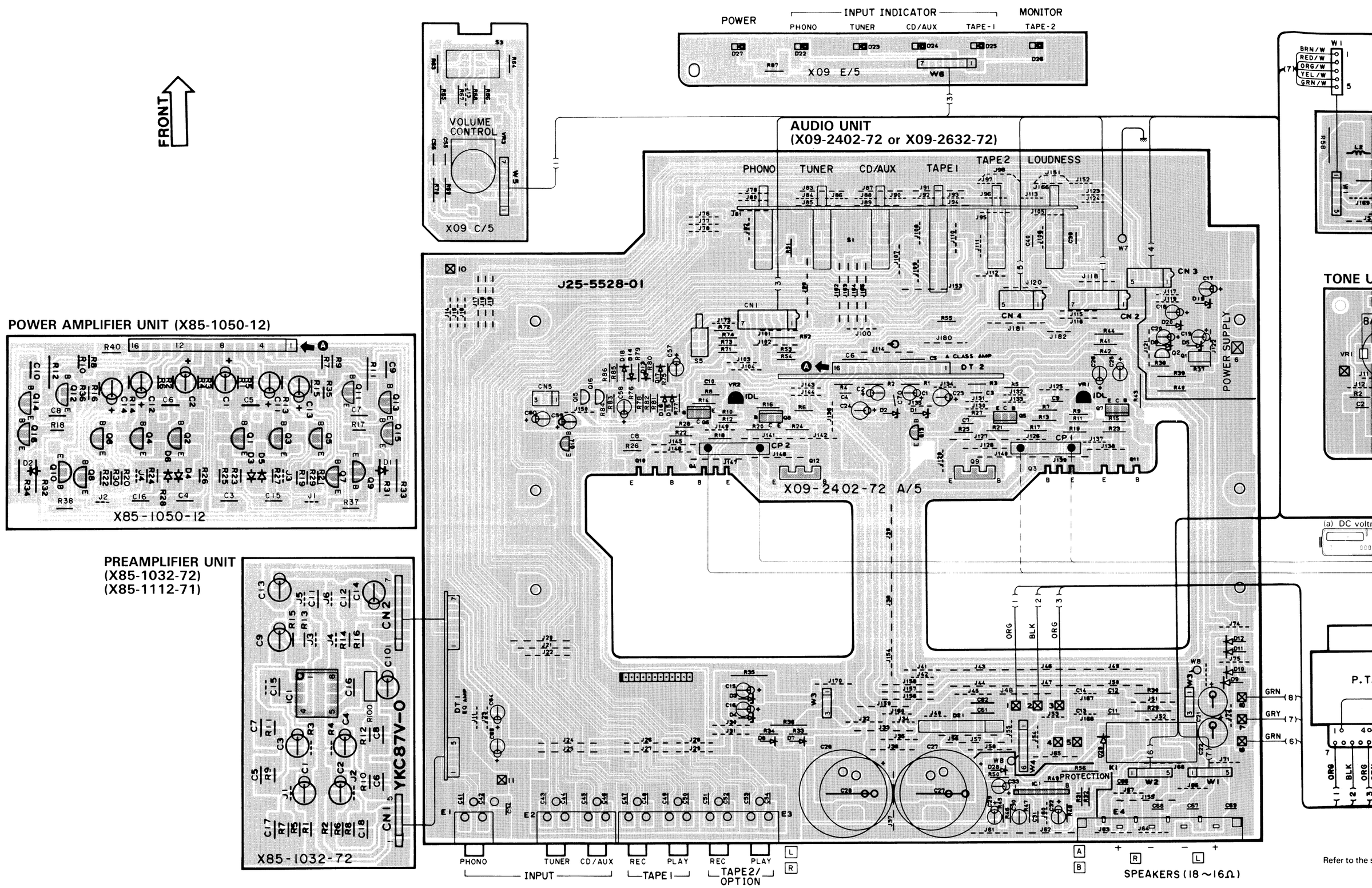

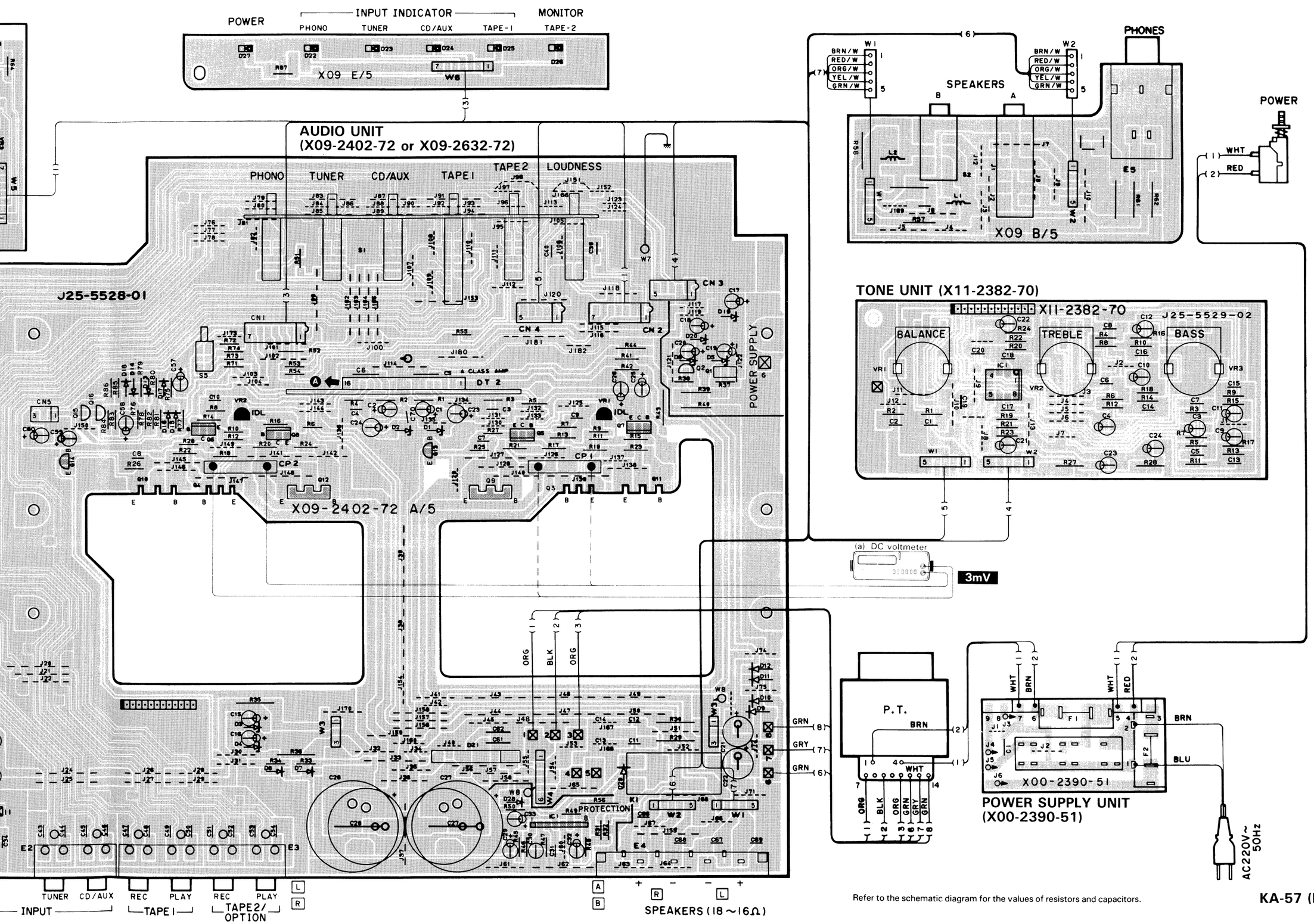

Refer to the schematic diagram for the values of resistors and capacitors.

KA-57 (E)

PC BOARD (Foil side view)

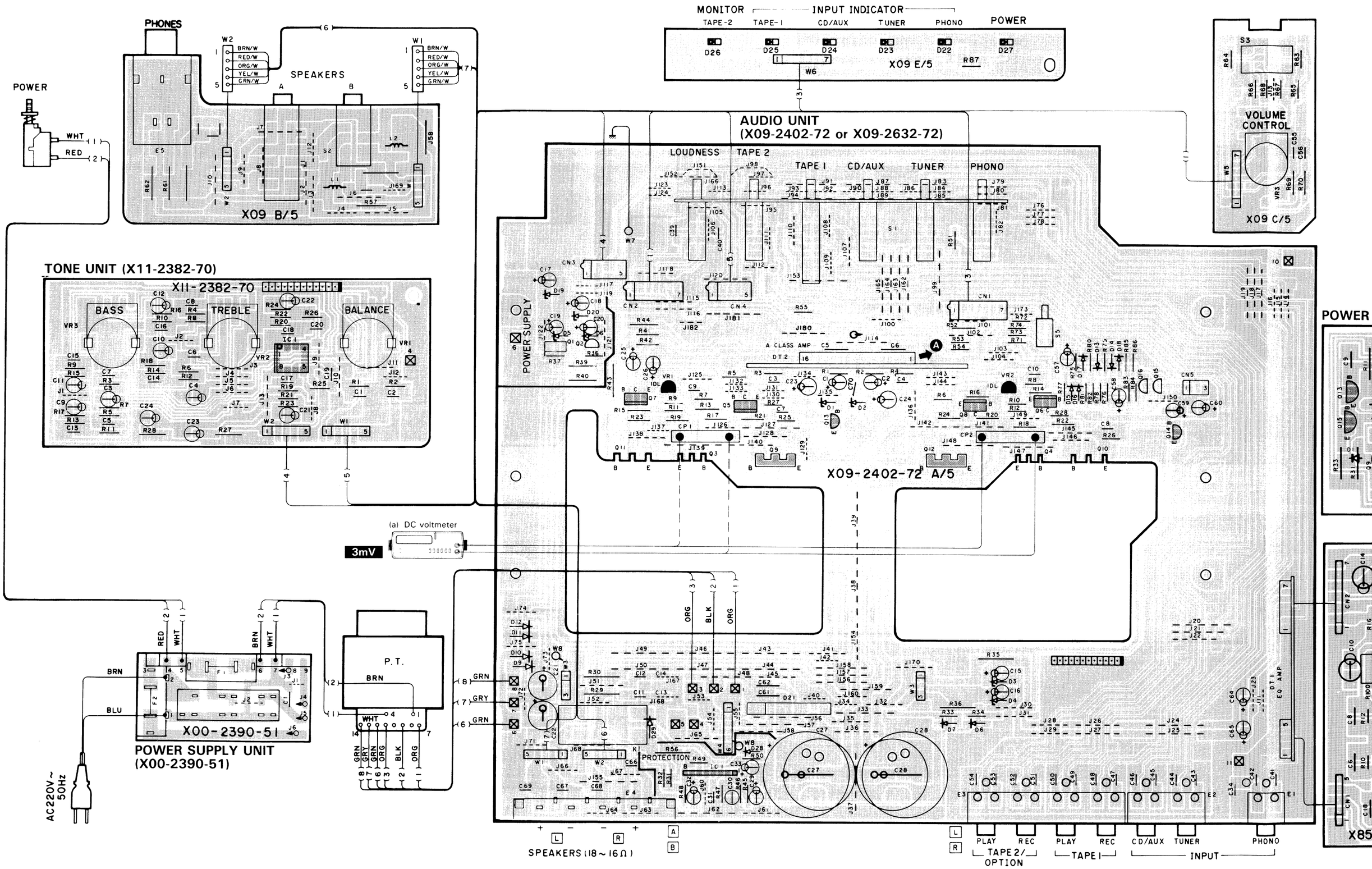

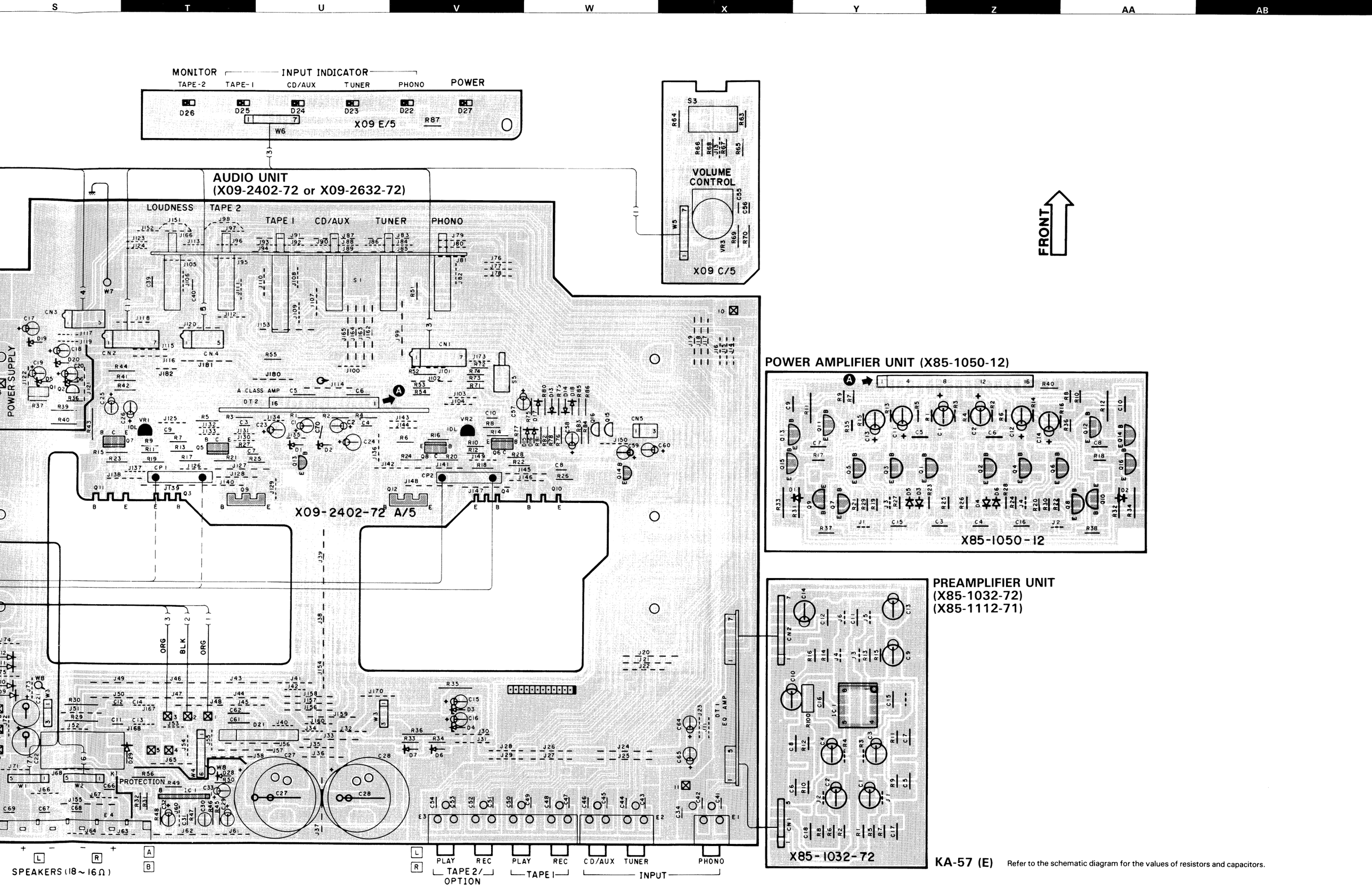

KA-57 (E) Refer to the schematic diagram for the values of resistors and capacitors.

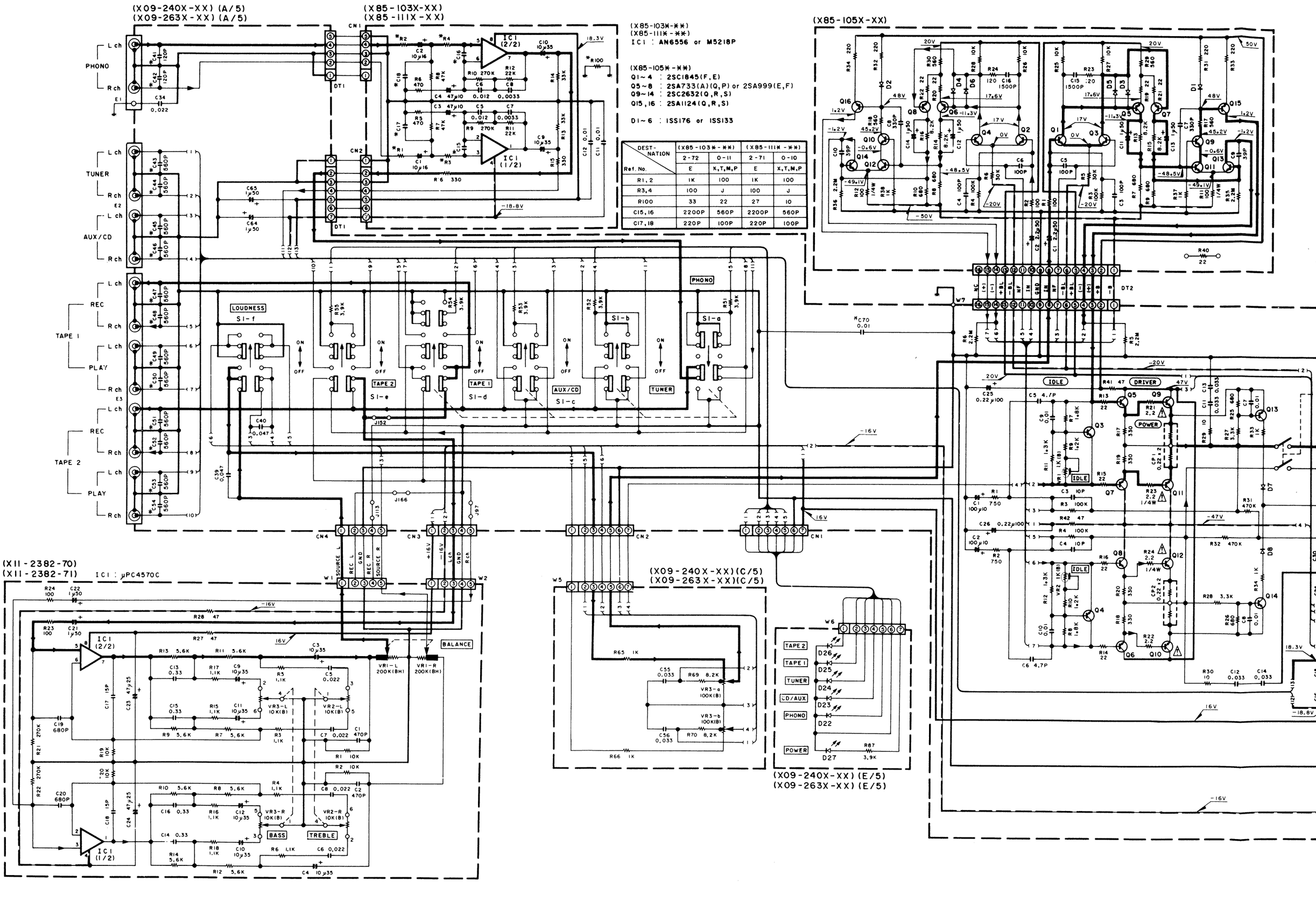

DEST-NATION / Ref. No.	(X85-103X-**) 2-72	(X85-103X-**) 0-11	(X85-111X-**) 2-71	(X85-111X-**) 0-10
	E	X,T,M,P	E	X,T,M,P
R1,2	1K	100	1K	100
R3,4	100	J	100	J
R100	33	22	27	10
C15,16	2200P	560P	2200P	560P
C17,18	220P	100P	220P	100P

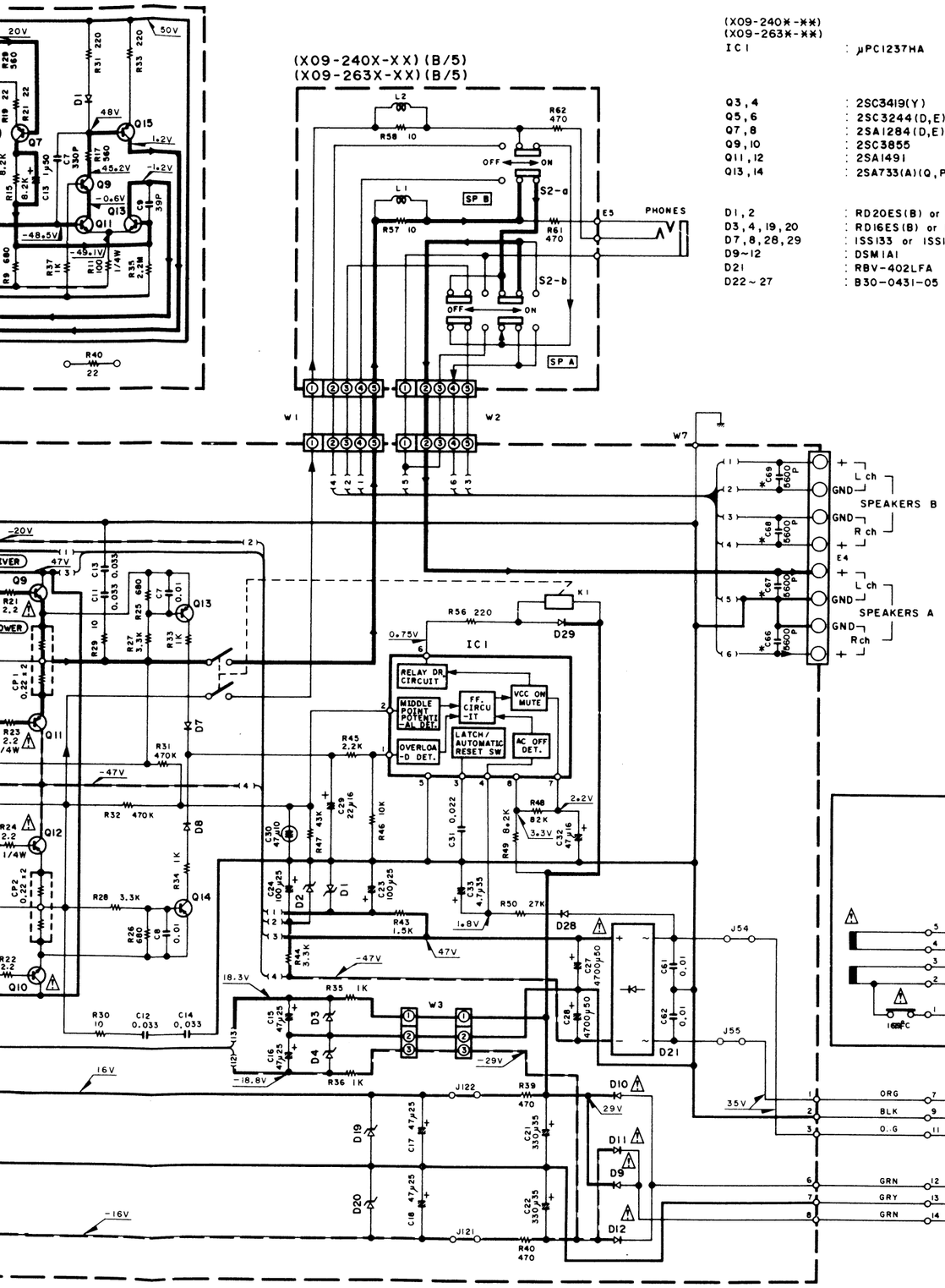

(X09-240*-**)
(X09-263*-**)

IC1	: μPC1237HA
Q3, 4	: 2SC3419(Y)
Q5, 6	: 2SC3244(D,E)
Q7, 8	: 2SA1284(D,E)
Q9, 10	: 2SC3855
Q11, 12	: 2SA1491
Q13, 14	: 2SA733(A)(Q,P)
D1, 2	: RD20ES(B) or HZS20S(B)
D3, 4, 19, 20	: RD16ES(B) or HZS16S(B)
D7, 8, 28, 29	: ISS133 or ISS176
D9~12	: DSM1A1
D21	: RBV-402LFA
D22~27	: B30-0431-05

	JAPAN MADE				SINGAPORE MADE			
	E	X,T	M	P	E	X,T	M	P
(X00-239*-**)	0-51	0-51	0-81	1-01	0-52	0-52	0-83	1-02
(X09-240*-**)	2-72	0-22	0-22	0-22	NO	NO	NO	NO
(X09-263*-**)	NO	NO	NO	NO	2-72	0-22	0-22	0-22
(X11-238*-**)	2-70	2-70	2-70	2-70	2-71	2-71	2-71	2-71
(X85-103*-**)	2-72	0-11	0-11	0-11	NO	NO	NO	NO
(X85-111*-**)	NO	NO	NO	NO	2-71	0-10	0-10	0-10
(X85-105*-**)	0-12	0-12	0-12	0-12	2-72	0-14	0-14	0-14

(X09-240*-**)
(X09-263*-**)

DESTINATION	No.	C41~54	C66~70
E	2-72	YES	YES
M,X,T,P	0-22	NO	NO

SIGNAL LINE
GND LINE
+B LINE
−B LINE

2SA1124
2SA1284
2SA733(A)
2SA999
2SC1845
2SC2632
2SC3244

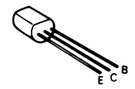

2SA1491
2SC3855

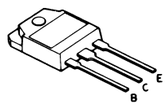

2SC3419

AN6556
M5218P
μPC4570C

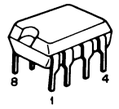

μPC1237HA

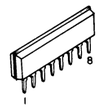

(P)TYPE

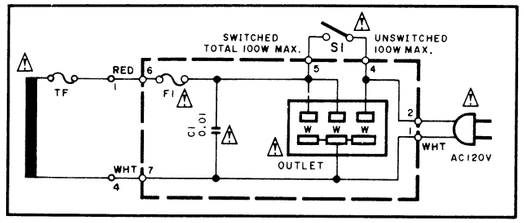

(M)TYPE

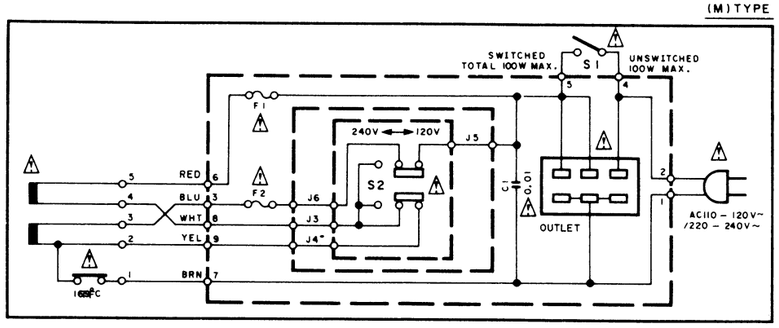

(X00-2390-51)
(X00-2390-52)

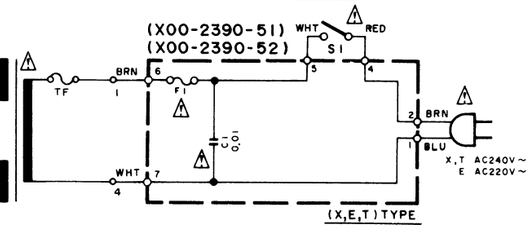

(X,E,T)TYPE

DC voltages are as measured with a high impedance voltmeter with no signal input. Values may vary slightly due to variations between individual instruments or/and units.

Les tensions c.c. doivent être mesurées avec un voltmètre à haute impédance sans signal d'entrée. Les valeurs peuvent différer légèrement du fait des variations inhérentes aux appareils et aux instruments de mesure individuels.

Die angegebenen Gleichspannungswerte wurden mit einem hochohmigen Spannungsmesser ohne Eingangssignal gemessen. Dabei schwanken die Meßwerte aufgrund von Unterschieden zwischen einzelnen Instrumenten oder Geräten u.U. geringfügig.

CAUTION: For continued safety, replace safety critical components only with manufacturer's recommended parts (refer to parts list). ⚠ Indicates safety critical components. To reduce the risk of electric shock, leakage-current or resistance measurements shall be carried out (exposed parts are acceptably insulated from the supply circuit) before the appliance is returned to the customer.

KA-57
KENWOOD

EXPLODED VIEW

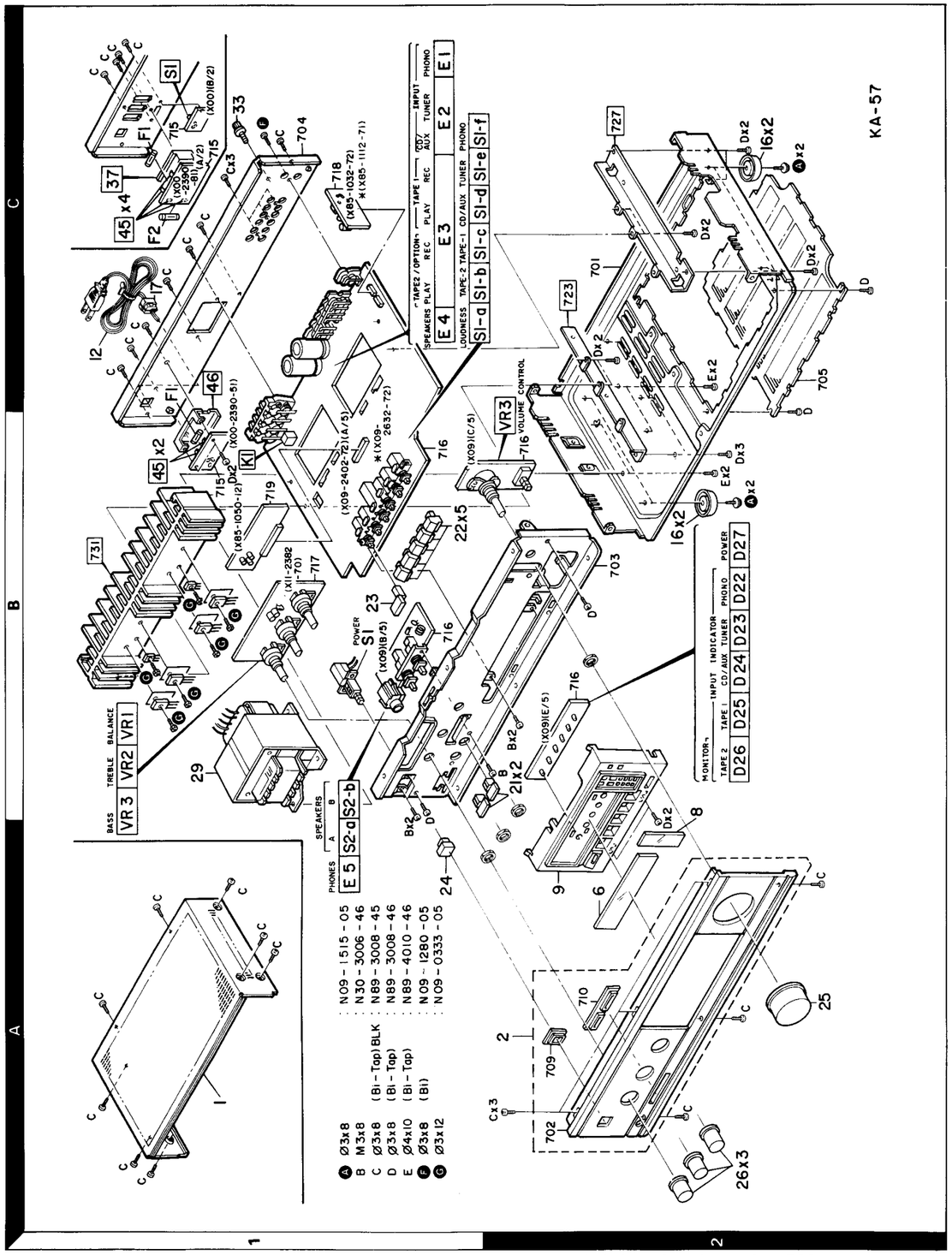

Parts with the exploded numbers larger than 700 are not supplied.

PARTS LIST

Parts without **Parts No.** are not supplied.
Les articles non mentionnes dans le **Parts No.** ne sont pas fournis.
Telle ohne **Parts No.** werden nicht geliefert.

	Ref. No. 参照番号	Address 位置	New Parts 新	Parts No. 部品番号	Description 部品名／規格	Destination 仕向	Remarks 備考
	KA-57 (Singapole)						
	1	1A		A01-1481-02	METALLIC CABINET		
	2	2A	*	A20-5510-02	PANEL ASSY		
	6	2A		B03-2402-04	DRESSING PLATE(INPUT INDICATOR		
	8	2B	*	B03-2413-04	DRESSING PLATE (POWER)		
	9	2A		B07-1721-02	ESCUTCHEON		
	-			B46-0096-13	WARRANTY CARD	X	
	-			B46-0121-03	WARRANTY CARD	P	
	-			B46-0122-13	WARRANTY CARD	E	
	-			B46-0143-03	WARRANTY CARD	T	
	-		*	B50-8697-00	INSTRUCTION MANUAL(ENGLISH)		
	-		*	B50-8698-00	INSTRUCTION MANUAL(FRENCH)	EMXP	
	-		*	B50-8699-00	INSTRUCTION MANUAL(G,D,I)	E	
	-		*	B50-8700-00	INSTRUCTION MANUAL(SPANISH)	M	
	-		*	B50-8701-00	INSTRUCTION MANUAL(ARABIC)	M	
	-			B58-0803-13	CAUTION CARD	E	
⚠	12	1C		E30-0459-05	AC POWER CORD	E	
⚠	12	1C		E30-0812-05	AC POWER CORD	M	
⚠	12	1C		E30-1341-05	AC POWER CORD	X	
⚠	12	1C		E30-1416-05	AC POWER CORD	T	
⚠	12	1C		E30-2209-05	AC POWER CORD	P	
⚠	F1	1C		F06-2021-05	FUSE (SEMKO) (250V T2A)	EXT	
⚠	F1	1C		F06-4024-05	FUSE (UL) (250V 4A)	P	
⚠	F1 ,2	1C		F05-2023-05	FUSE (250V 2A)	M	
	-		*	H01-7761-04	ITEM CARTON CASE		
	-			H10-3574-02	POLYSTYRENE FOAMED FIXTURE		
	-			H11-0015-04	POLYSTYRENE FOAMED BOARD		
	-			H25-0223-04	PROTECTION BAG (750X350X0.03)		
	-			H25-0232-04	PROTECTION BAG (235X350X0.03)		
	16	2B,2C		J02-0170-04	FOOT		
⚠	17	1C		J42-0083-05	POWER CORD BUSHING		
	-			J61-0307-05	WIRE BAND		
	21	2B		K27-0742-14	KNOB (BUTTON) SPEAKER,A-B		
	22	1B		K27-1722-04	KNOB (BUTTON) INPUT SEL		
	23	1B		K27-1723-04	KNOB (BUTTON) LOUDNESS		
	24	1A		K29-2001-04	KNOB ASSY(BUTTON) POWER		
	25	2A		K29-2020-04	KNOB (MAIN VOL)		
	26	2A		K29-2639-04	KNOB (TONE)		
⚠	29	1B	*	L01-5171-05	POWER TRANSFORMER	P	
⚠	29	1B	*	L01-5172-05	POWER TRANSFORMER	XT	
⚠	29	1B	*	L01-5177-05	POWER TRANSFORMER	E	
⚠	29	1B		L01-7635-05	POWER TRANSFORMER	M	
	33	1C		N08-0128-35	BINDING POST (GND)		
	A	2B,2C		N09-1515-05	TAPPING SCREW (Ø3X8)		
	F	1C		N09-1280-05	TAPTITE SCREW (Ø3X8)		
⚠	S1	1B		S40-1073-05	PUSH SWITCH (POWER)		
	KA-57 (Japan)						
	1	1A		A01-1481-02	METALLIC CABINET		
	2	2A		A20-5510-02	PANEL ASSY		
	6	2A		B03-2402-04	DRESSING PLATE(INPUT INDICATOR		

E: Scandinavia & Europe K: USA P: Canada
U: PX(Far East, Hawaii) T: England M: Other Areas
UE: AAFES(Europe) X: Australia

⚠ indicates safety critical components.

PARTS LIST

Parts without **Parts No.** are not supplied.
Les articles non mentionnes dans le **Parts No.** ne sont pas fournis.
Teile ohne **Parts No.** werden nicht geliefert.

	Ref. No. 参照番号	Address 位置	New Parts 新	Parts No. 部品番号	Description 部品名／規格	Destination 仕向	Remarks 備考
	8	2B		B03-2413-04	DRESSING PLATE(POWER)		
	9	2A		B07-1721-02	ESCUTCHEON		
	-			B46-0096-13	WARRANTY CARD	X	
	-			B46-0121-03	WARRANTY CARD	P	
	-			B46-0122-13	WARRANTY CARD	E	
	-			B46-0143-03	WARRANTY CARD	T	
	-		*	B50-8872-00	INSTRUCTION MANUAL(ENGLISH)		
	-		*	B50-8873-00	INSTRUCTION MANUAL(FRENCH)	EMXP	
	-		*	B50-8874-00	INSTRUCTION MANUAL(G,D,I)	E	
	-		*	B50-8875-00	INSTRUCTION MANUAL(SPANISH)	M	
	-		*	B50-8876-00	INSTRUCTION MANUAL(ARABIC)	M	
	-			B58-0803-13	CAUTION CARD	E	
⚠	12	1C		E30-0459-05	AC POWER CORD	E	
⚠	12	1C		E30-0812-05	AC POWER CORD	M	
⚠	12	1C		E30-0974-05	AC POWER CORD	P	
⚠	12	1C		E30-1341-05	AC POWER CORD	X	
⚠	12	1C		E30-1416-05	AC POWER CORD	T	
⚠	F1	1C		F06-2021-05	FUSE (SEMKO) (250V T2A)	EXT	
⚠	F1	1C		F06-4024-05	FUSE (UL) (250V 4A)	P	
⚠	F1 ,2	1C		F05-2023-05	FUSE (250V 2A)	M	
	-		*	H01-7841-04	ITEM CARTON CASE		
	-			H10-3317-02	POLYSTYRENE FOAMED FIXTURE		
	-			H11-0002-04	POLYSTYRENE FOAMED BOARD		
	-			H25-0223-04	PROTECTION BAG (750X350X0.03)		
	-			H25-0232-04	PROTECTION BAG (235X350X0.03)		
	16	2B,2C		J02-0170-04	FOOT		
⚠	17	1C		J42-0083-05	POWER CORD BUSHING		
	-			J61-0307-05	WIRE BAND		
	21	2B		K27-0742-14	KNOB (BUTTON)SPEAKER,A-B		
	22	1B		K27-1722-04	KNOB (BUTTON)INPUT SEL		
	23	1B		K27-1723-04	KNOB (BUTTON)LOUDNESS		
	24	1A		K29-2001-04	KNOB ASSY(BUTTON)POWER		
	25	2A		K29-2020-04	KNOB MAIN VOL		
	26	2A		K29-2639-04	KNOB TONE		
⚠	29	1B		L01-7631-05	POWER TRANSFORMER	P	
⚠	29	1B		L01-7632-05	POWER TRANSFORMER	XT	
⚠	29	1B		L01-7635-05	POWER TRANSFORMER	M	
⚠	29	1B		L01-7637-05	POWER TRANSFORMER	E	
	33	1C		N08-0128-35	BINDING POST (GND)		
	A	2B,2C		N09-1515-05	TAPPING SCREW (Ø3X8)		
	F	1C		N09-1280-05	TAPTITE SCREW (Ø3X8)		
⚠	S1	1B		S40-1073-05	PUSH SWITCH (POWER)		
	POWER SUPPLY UNIT (X00-2390-52)						
⚠	C1			C91-0023-05	CERAMIC 0.01UF AC250V	M	
⚠	C1			C91-0647-05	CERAMIC 0.01UF P	EXTP	
⚠	37	1C	*	E03-0077-05	AC OUTLET	M	
⚠	37	1C	*	E03-0078-05	AC OUTLET	P	
	45	1C		J13-0041-05	FUSE CLIP	MP	
	45	1B		J13-0054-05	FUSE CLIP	EXT	
	46	1C	*	J21-3698-04	MOUNTING HARDWARE	EXT	

E: Scandinavia & Europe K: USA P: Canada
U: PX(Far East, Hawaii) T: England M: Other Areas
UE: AAFES(Europe) X: Australia

⚠ indicates safety critical components.

PARTS LIST

Parts without **Parts No.** are not supplied.
Les articles non mentionnes dans le **Parts No.** ne sont pas fournis.
Teile ohne **Parts No.** werden nicht geliefert.

	Ref. No. 参照番号	Address 位置	New Parts 新	Parts No. 部品番号	Description 部品名／規格	Destination 仕向	Remarks 備考
⚠	S1	1C		S31-2126-05	SLIDE SWITCH (POWER TYPE)	M	
	AUDIO UNIT (X09-2402-72) (X09-2632-72: S)						
	D22 -27	2B		B30-0431-05	LED(LN21CPH) MONI.INPUT INDI		
	C1 ,2			CE04KW1A101M	ELECTRO 100UF 10WV		
	C3 ,4			CC45FSL1H100D	CERAMIC 10PF D		
	C5 ,6			C91-0717-05	CERAMIC 4.7PF K		
	C7 -10			CF92FV1H103J	MF 0.010UF J		
	C11 -14			CF92FV1H333J	MF 0.033UF J		
	C15 -18			CE04KW1E470M	ELECTRO 47UF 25WV		
	C21 ,22			CE04KW1V331M	ELECTRO 330UF 35WV		
	C23 ,24			CE04KW1E101M	ELECTRO 100UF 25WV		
	C25 ,26		*	CE04KW2AR22M	ELECTRO 0.22UF 100WV		
	C27 ,28			C90-0580-05	ELECTRO 4700UF 50WV		
	C29			CE04KW1C220M	ELECTRO 22UF 16WV		
	C30			C90-1334-05	NP-ELEC 47UF 10WV		
	C31			CF92FV1H223J	MF 0.022UF J		
	C32			CE04KW1C470M	ELECTRO 47UF 16WV		
	C33			CE04KW1V4R7M	ELECTRO 4.7UF 35WV		
	C34			CF92FV1H223J	MF 0.022UF J		
	C39 ,40			CF92FV1H473J	MF 0.047UF J		
	C41 ,42			CC45FSL1H121J	CERAMIC 120PF J	E	
	C43 -54			CK45FB1H561K	CERAMIC 560PF K	E	
	C55 ,56			CF92FV1H333J	MF 0.033UF J		
	C61 ,62			CK45FE2H103P	CERAMIC 0.010UF P		
	C64 ,65			CE04KW1H010M	ELECTRO 1.0UF 50WV		
	C66 -69			CF92FV1H562J	MF 5600PF J	E	
	C70			CK45FF1H103Z	CERAMIC 0.010UF Z	E	
	E1	1C		E13-0235-05	PHONO JACK(2P) PHONO		
	E2	1C		E13-0497-05	PHONO JACK(4P) TUNER,CD/AUX		
	E3	1C		E13-0814-05	PHONO JACK(8P) TAPE		
	E4	1C		E20-0823-05	LOCK TERMINAL BOARD(8P)SPRKRS		
	E5	1A		E11-0162-05	PHONE JACK(3P) PHONES		
	L1 ,2			L39-0085-05	PHASE-COMPENSATION COIL		
	G	1B		N09-0333-05	TAPPING SCREW (Ø3X12)		
	CP1 ,2			R90-0187-05	MULTI-COMP 0.22X2 K 5W		
	R13 ,14			RD14AB2E220J	FL-PROOF RD 22 J 1/4W		
	R15			RD14GB2E220J	FL-PROOF RD 22 J 1/4W		
	R16			RD14AB2E220J	FL-PROOF RD 22 J 1/4W		
	R17 -20			RD14AB2E331J	FL-PROOF RD 330 J 1/4W		
	R21			RD14AB2E2R2J	FL-PROOF RD 2.2 J 1/4W		
	R23 ,24			RD14AB2E2R2J	FL-PROOF RD 2.2 J 1/4W		
	R29 ,30			RS14DB3D100J	FL-PROOF RS 10 J 2W		
	R35 ,36			RS14KB3A102J	FL-PROOF RS 1.0K J 1W		
	R39 ,40			RS14DB3A471J	FL-PROOF RS 470 J 1W		
	R41 ,42			RD14GB2E470J	FL-PROOF RD 47 J 1/4W		
	R43			RS14KB3D152J	FL-PROOF RS 1.5K J 2W		
	R44			RS14KB3A332J	FL-PROOF RS 3.3K J 1W		
	R56			RS14DB3D221J	FL-PROOF RS 220 J 2W		
	R57			RS14KB3A100J	FL-PROOF RS 10 J 1W		
	R58			RS14DB3A100J	FL-PROOF RS 10 J 1W		
	R61 ,62			RS14DB3D471J	FL-PROOF RS 470 J 2W		
	VR1 ,2			R12-1066-05	TRIMMING POT.(1K) IDLE		

E: Scandinavia & Europe K: USA P: Canada
U: PX(Far East, Hawaii) T: England M: Other Areas
UE: AAFES(Europe) X: Australia

⚠ indicates safety critical components.

PARTS LIST

Parts without **Parts No.** are not supplied.
Les articles non mentionnes dans le **Parts No.** ne sont pas fournis.
Teile ohne **Parts No.** werden nicht geliefert.

Ref. No. 参照番号	Address 位置	New Parts 新	Parts No. 部品番号	Description 部品名／規格	Destination 仕向	Remarks 備考
VR3	2B		R06-5151-05	POTENTIOMETER(100K B)VOL CONT		
K1	1B		S51-2078-05	MAGNETIC RELAY		
S1	2C	*	S42-6021-05	MULTIPLE PUSH SWITCH(INPUT SEL		
S2	1A,1B	*	S42-2153-05	MULTIPLE PUSH SWITCH(SPEAKERS)		
D1 ,2			HZS20S(B)	ZENER DIODE		
D1 ,2			RD20ES(B)	ZENER DIODE		
D3 ,4		*	HZS16S(B)	DIODE		
D3 ,4			RD16ES(B)	ZENER DIODE		
D7 ,8			1SS133	DIODE		
D7 ,8			1SS176	DIODE		
⚠ D9 -12			DSM1A1	DIODE		
D19 ,20		*	HZS16S(B)	DIODE		
D19 ,20			RD16ES(B)	ZENER DIODE		
⚠ D21			RBV-402LFA	DIODE		
D28 ,29			1SS133	DIODE		
D28 ,29			1SS176	DIODE		
IC1			UPC1237HA	IC(POWER AMP)		
Q3 ,4			2SC3419(Y)	TRANSISTOR		
Q5 ,6			2SC3244(D,E)	TRANSISTOR		
Q7 ,8			2SA1284(D,E)	TRANSISTOR		
⚠ Q9 ,10			2SC3855	TRANSISTOR		
⚠ Q11 ,12			2SA1491	TRANSISTOR		
Q13 ,14			2SA733(A)(Q,P)	TRANSISTOR		
TONE UNIT (X11-2382-71)						
C1 ,2			CK45FB1H471K	CERAMIC 470PF K		
C3 ,4			CE04KW1V100M	ELECTRO 10UF 35WV		
C5 -8			CF92FV1H223J	MF 0.022UF J		
C9			CE04KW1V100M	ELECTRO 10UF 35WV		
C10			CE04JW1V100M	ELECTRO 10UF 35WV		
C11 ,12			CE04KW1V100M	ELECTRO 10UF 35WV		
C13 -16			CF92FV1H334J	MF 0.33UF J		
C17 ,18			CC45FSL1H150J	CERAMIC 15PF J		
C19 ,20			CK45FB1H681K	CERAMIC 680PF K		
C21			CE04KW1H010M	ELECTRO 1.0UF 50WV		
C22			CE04CW1H010M	ELECTRO 1.0UF 50WV		
C23 ,24			CE04KW1E470M	ELECTRO 47UF 25WV		
R27 ,28			RD14GB2E470J	FL-PROOF RD 47 J 1/4W		
VR1	1B		R06-5134-05	POTENTIOMETER(200K BH)BALANCE		
VR2 ,3	1B		R06-3048-05	POTENTIOMETER(10K B)BASS,TREB		
IC1			UPC4570C	IC(OP AMP X2)		
PREAMPLIFIER UNIT (X85-1032-72)						
C1 ,2			CE04FW1C100M	ELECTRO 10UF 16WV		
C3 ,4			CE04FW1A470M	ELECTRO 47UF 10WV		
C5			CF92FV1H123J	MF 0.012UF J		
C6			CF92FV1H123J	MF 0.012UF J		
C7			CF92FV1H332J	MF 3300PF J		
C8			CF92FV1H332J	MF 3300PF J		
C9 ,10			CE04KW1V100M	ELECTRO 10UF 35WV		
C11 ,12			CK45FF1H103Z	CERAMIC 0.010UF Z		
C15 ,16			CK45FB1H222K	CERAMIC 2200PF K	E	
C15 ,16			CK45FB1H561K	CERAMIC 560PF K	MXTP	
C17 ,18			CC45FSL1H101J	CERAMIC 100PF J	MXTP	

E: Scandinavia & Europe K: USA P: Canada
U: PX(Far East, Hawaii) T: England M: Other Areas
UE: AAFES(Europe) X: Australia

⚠ indicates safety critical components.

PARTS LIST

Parts without **Parts No.** are not supplied.
Les articles non mentionnes dans le **Parts No.** ne sont pas fournis.
Teile ohne **Parts No.** werden nicht geliefert.

Ref. No. 参照番号	Address 位置	New Parts 新	Parts No. 部品番号	Description 部品名／規格	Destination 仕向	Remarks 備考
C17 ,18			CC45FSL1H221J	CERAMIC 220PF J	E	
IC1			AN6556	IC(OP AMP X2)		
IC1			M5218P	IC(OP AMP X2)		
POWER AMPLIFIER UNIT (X85-1050-12)						
C1 ,2			CE04FW1H2R2MEL	ELECTRO 2.2UF 50WV		
C3 -6			CC45FSL1H101J	CERAMIC 100PF J		
C7 ,8			CC45FSL1H331J	CERAMIC 330PF J		
C9 ,10			CC45FSL1H220J	CERAMIC 22PF J	E	
C9 ,10			CC45FSL1H390J	CERAMIC 39PF J		
C9 ,10			CC45FSL1H390J	CERAMIC 39PF J	MXTP	
C11 -14			CE04FW1H010MEL	ELECTRO 1.0UF 50WV		
C15 ,16			CK45FB1H152K	CERAMIC 1500PF K		
C15 ,16			CK45FB1H152K	CERAMIC 1500PF K	MXTP	
C15 ,16			CK45FB1H222K	CERAMIC 2200PF K	E	
R11 ,12			RD14AB2E101JTS	FL-PROOF RD 100 J 1/4W		
R31 -34			RD14AB2E221JTS	FL-PROOF RD 220 J 1/4W		
D1 -6			1SS133	DIODE		
D1 -6			1SS176	DIODE		
Q1 -4			2SC1845(F,E)	TRANSISTOR		
Q5 -8			2SA733(A)(Q,P)	TRANSISTOR		
Q5 -8			2SA999(E,F)	TRANSISTOR		
Q9 -14			2SC2632(Q,R,S)	TRANSISTOR		
Q15 ,16			2SA1124(Q,R,S)	TRANSISTOR		

E: Scandinavia & Europe K: USA P: Canada
U: PX(Far East, Hawaii) T: England M: Other Areas
UE: AAFES(Europe) X: Australia

⚠ indicates safety critical components.

KA-57

SPECIFICATIONS

Audio Section
Rated Power Output

50 watts per channel minimum RMS, both channels driven, at 8 ohms from 20 Hz to 20,000 Hz with no more than 0.09% total harmonic distortion.

Maximum Continuous power output (IEC/NF) from 63 Hz to 12,500 Hz, 0.7% T.H.D.
8 ohms ..... 55 W + 55 W
Both Channels Driven ..... 60 W + 60 W 8 ohms at 1,000 Hz
75 W + 75 W 4 ohms at 1,000 Hz
Music Power Output at 8 ohms ..... 100 W + 100 W
Total Harmonic Distortion
LINE input to SPEAKER output
(20 Hz to 20,000 Hz) ..... 0.09% at rated power into 8 ohms
(20 Hz to 20,000 Hz) ..... 0.03% at 1/2 rated power into 8 ohms
(1 kHz) ..... 0.004% at 1/2 rated power into 8 ohms
Intermodulation Distortion (60 Hz:7 kHz = 4:1) ... 0.03% at rated power into 8 ohms
Damping Factor ..... 40 (50 Hz at 8 ohms)
Power Bandwidth ..... 10 Hz to 100 kHz at 0.2% T.H.D. 8 ohms
Frequency Response ..... 10 Hz to 70 kHz, +0 dB, −3 dB
Input Sensitivity/Impedance
Phono ..... 2.5 mV/47 k ohms
Tuner, Tape play, CD/AUX 150 mV/27 k ohms

Signal-to-Noise Ratio (IHF-A) (IHF'66)
Phono ..... 75 dB for 2.5 mV input
81 dB for 5.0 mV input
Tuner, Tape play, CD/AUX 100 dB
Signal to Noise Ratio Unweighted at 50 mW (DIN)
Phono ..... 57 dB
Tuner, Tape play, CD/AUX 59 dB
Channel Separation at 1 kHz (DIN)
Phono (Terminated with 2.2 kohms) ..... 55 dB
Tuner, Tape play, CD/AUX (Terminated with 47 kohms + 250 pF) ..... 44 dB
Phono Input Capacity (DIN) . 220 pF
Phono Maximum Input Level 170 mV, T.H.D. 0.05% at 1 kHz
Output Level/Impedance
Tape REC (Pin) ..... 150 mV/330 ohms
Phono Frequency Response . RIAA standard curve ±0.5 dB (20 Hz to 20 kHz)
Tone Control
Bass ..... ±9 dB at 100 Hz
Treble ..... ±8 dB at 10 kHz
Loudness Control ..... +8 dB at 100 Hz (at −30 dB VOLUME Level)

General
Power Consumption ..... 3 A (U.S.A. & Canada models)
200 W (Other countries)
Dimensions ..... W: 420 mm (16-9/16″)
H: 110 mm (4-5/16″)
D: 277 mm (10-7/8″)
Weight (Net) ..... 6.1 kg (13.4 lb)

Note:
Component and circuitry are subject to modification to insure best operation under differing local conditions. This manual is based on, the Europe (E) standard, and provides information on regional circuit modification through use of alternate schematic diagrams, and information on regional component variations through use of parts list.

Kenwood follows a policy of continuous advancements in development. For this reason specifications may be changed without notice.

Kenwood poursuit une politique de progrès constants en ce qui doncerne le développement. Pour cette raison, les spécifications sont sujettes à modifications sans préavis.

Kenwood strebt ständige, Verbesserungen in der Entwicklung an. Daher bleiben Änderungen der technischen Daten jederzeit vorbehalten.

KENWOOD CORPORATION
Shionogi Shibuya Building, 17-5, 2-chome Shibuya, Shibuya-ku, Tokyo 150, Japan

KENWOOD U.S.A. CORPORATION
2201 East Dominguez Street, Long Beach, CA 90810;
550 Clark Drive, Mount Olive, NJ 07828, U.S.A.

KENWOOD ELECTRONICS CANADA INC.
P.O. Box 1075 959 Gana Court, Mississauga, Ontario, Canada L4T 4C2

KENWOOD ELECTRONICS BENELUX N.V.
Mechelsesteenweg 418 B-1930 Zaventem, Belgium

KENWOOD ELECTRONICS DEUTSCHLAND GMBH
Rembrucker-Str. 15, 6056 Heusenstamm, West Germany

TRIO-KENWOOD FRANCE S.A.
Hi-Fi·VIDEO·CAR Hi-Fi
13, Boulevard Ney, 75018 Paris, France

TRIO-KENWOOD U.K. LTD.
17 Bristol Road, The Metropolitan Centre, Greenford, Middx. UB6 8UP England

KENWOOD ELECTRONICS AUSTRALIA PTY. LTD.
4E Woodcock Place, Lane Cove, N.S.W. 2066, Australia

KENWOOD & LEE ELECTRONICS, LTD.
Wang Kee Building, 4th Floor, 34-37, Connaught Road, Central, Hong Kong