ORDER NO. HAD8507182C2

Service Manual

Computer Drive New Class A Stereo Integrated Amplifier

SU-V10X

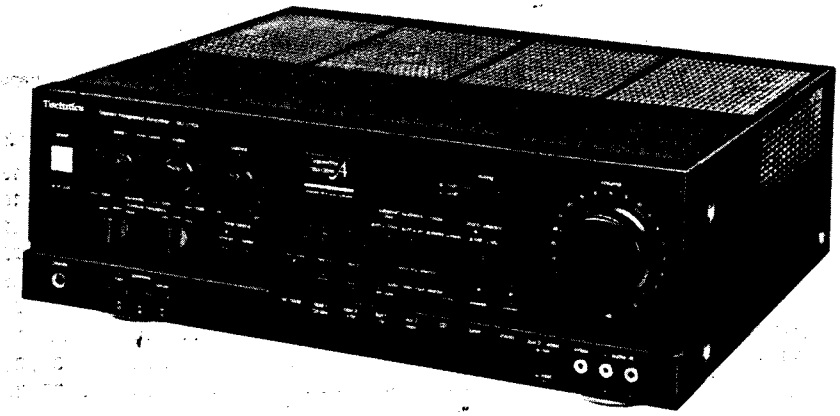

Color

(K)·····Black Type

Color	Areas
(K)	[D] ·····Scandinavia
(K)	[EF]·····France
(K)	[Ei]·····Italy
(K)	[EW]·····Switzerland
(K)	[EK]·····United Kingdom
(K)	[EH]·····Holland
(K)	[EGA]·····F. R. Germany
(K)	[EB]·····Belgium
(K)	[XA]·····Southeast, Asia, Oceania, Africa, Middle Near East and Central South America
(K)	[XL]·····Australia

SPECIFICATIONS

(DIN 45 500)

■ MAIN AMPLIFIER SECTION
(Input Signal: EXT. INPUT)

1 kHz continuous power output	
both channels driven	2 × 120W (4Ω)
	2 × 120W (8Ω)
40 Hz~16 kHz continuous power output	
both channels driven	2 × 120W (4Ω)
	2 × 120W (8Ω)
20 Hz~20 kHz continuous power output	
both channels driven	2 × 120W (4Ω)
	2 × 120W (8Ω)
Total harmonic distortion	
rated power at 20 Hz~20 kHz	0.007% (4Ω)
	0.003% (8Ω)
rated power at 40 Hz~16 kHz	0.007% (4Ω)
	0.003% (8Ω)
rated power at 1 kHz	0.0015% (4Ω)
	0.001% (8Ω)
half power at 20 Hz~20 kHz	0.002% (8Ω)
half power at 1 kHz	0.001% (8Ω)
Intermodulation distortion	
rated power at 250 Hz: 8 kHz=4:1, 8Ω	0.01%
rated power at 60 Hz: 7 kHz=4:1, SMPTE, 8Ω	0.007%
Power bandwidth	
both channels driven, −3 dB	5 Hz~70 kHz (4Ω, 0.03%)
	5 Hz~70 kHz (8Ω, 0.02%)
Residual hum and noise	0.5 mV
Damping factor	40 (4Ω), 80 (8Ω)
Headphones output level and impedance	740 mV/330Ω
Load impedance	
MAIN or REMOTE	4Ω~16Ω
MAIN and REMOTE	8Ω~16Ω

■ PRE AMPLIFIER SECTION

Input sensitivity and impedance	
PHONO MM	2.5 mV/47kΩ
MC	170 μV/220Ω
TUNER, CD, TV/AUX 1, VIDEO/AUX 2, TAPE 1/DA TAPE, TAPE 2/VCR	150 mV/18kΩ
PHONO maximum input voltage (1 kHz, RMS)	
MM	170 mV
MC	12 mV
S/N	
rated power (4Ω)	
PHONO MM	79 dB (IHF, A: 90 dB)
MC	72 dB (IHF, A: 72 dB (250 μV))
TUNER, CD, TV/AUX 1, VIDEO/AUX 2, TAPE 1/DA TAPE, TAPE 2/VCR	98 dB (IHF, A: 110 dB)
Frequency response	
PHONO	RIAA standard curve ±0.2 dB (30 Hz~15 kHz)
TUNER, CD, TV/AUX 1, VIDEO/AUX 2, TAPE 1/DA TAPE, TAPE 2/VCR	−3 dB (2 Hz~140 kHz) +0 dB, −0.1 dB (20 Hz~20 kHz)
Tone controls	
BASS	50 Hz, +10dB~−10 dB
TREBLE	20 kHz, +10dB~−10 dB
Turnover frequency	
BASS	125 Hz, 250 Hz, 500 Hz
TREBLE	2 kHz, 4 kHz, 8 kHz
Muting	−20 dB
Subsonic filter	20 Hz, −6 dB/oct.
Loudness control (volume at −30 dB)	50 Hz, +9 dB
Output voltage and impedance	
TAPE 1, 2, REC OUT	150 mV
Channel balance, CD, AUX 1, 2 250 Hz~6,300 Hz	±1 dB
Channel separation, CD, AUX 1, 2 1 kHz	55 dB

Technics

Matsushita Electric Trading Co., Ltd.
P.O. Box 288, Central Osaka Japan

H1178

■ VIDEO SECTION
(TV/AUX 1, VIDEO/AUX 2, TAPE 2/VCR)

Output voltage (at 1V input 75 ohms unbalanced)	1±0.1 Vp-p
Maximum input voltage	1.5 Vp-p
Input/output impedance	75 ohms unbalanced

Notes:
- Total harmonic distortion is measured by the digital spectrum analyzer (H.P. 3045 system).

■ GENERAL

Power consumption	670W
Power supply	AC 50 Hz/60 Hz, 110V/127V/220V/240V
Dimensions (W×H×D)	430 × 147 × 392 mm (16-15/16" × 5-25/32" × 15-13/32")
Weight	13.5 kg (29.8 lb.)

- Specifications are subject to change without notice. Weight and dimensions shown are approximate.

■ CONTENTS

■ SAFETY PRECAUTION
(thes "safety precaution " is applied only in U.S.A.)

1. Before servicing, unplug the power cord to prevent an electric shock.
2. When replacing parts, use only manufacturer's recommended components for safety.
3. Check the condition of the power cord. Replace if wear or damage is evident.
4. After servicing, be sure to restore the lead dress, insulation barriers, insulation papers, shields, etc.
5. Before returning the serviced equipment to the customer, be sure to make the following insulation resistance test to prevent the customer from being exposed to a shock hazard.

• INSULATION RESISTANCE TEST

1. Unplug the power cord and short the two prongs of the plug with a jumper wire.
2. Turn on the power switch.
3. Measure the resistance value with ohmmeter between the jumpered AC plug and each exposed metal cabinet part, such as screwheads antenna, control shafts, handle brackets, etc. Equipment with antenna terminals should read between 3MΩ and 5.2MΩ to all exposed parts. (Fig. A) Equipment without antenna terminals should read approximately infinity to all exposed parts. (Fig. B)

Note: Some exposed parts may be isolated from the chassis by design. These will read infinity.

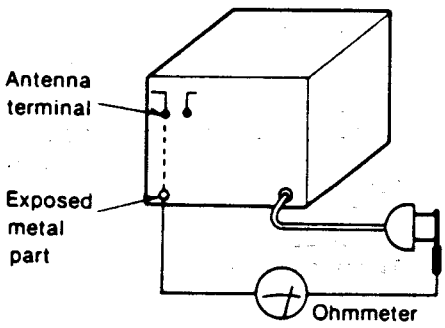

(Fig. A)

Resistance = 3MΩ—5.2MΩ

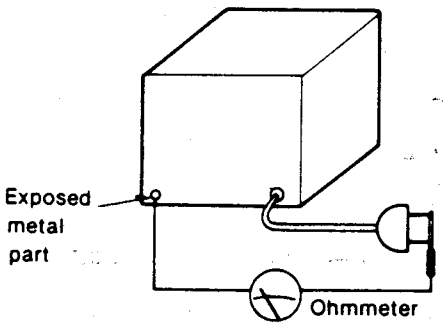

(Fig. B)

Resistance = Approx ∞

4. If the measurement is outside the specified limits, there is a possibility of a shock hazard. The equipment should be repaired and rechecked before it is returned to the customer.

■ LOCATION OF CONTROLS

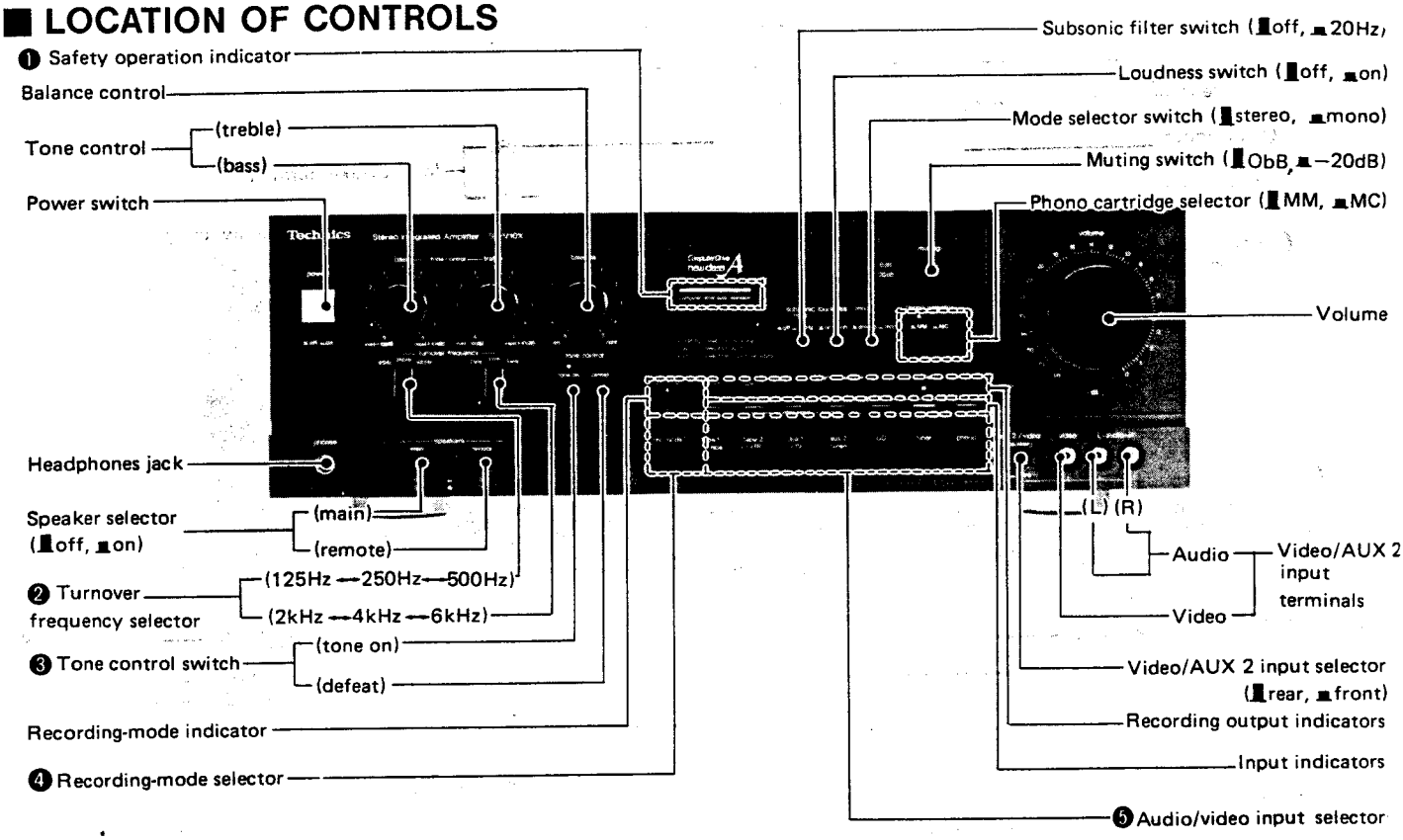

❶ When the power is switched ON, this indicator flashes for about 5 seconds, and then illuminates steadily when the unit is in the operation condition.
If an abnormal condition in the circuitry is detected, such as DC voltage appearing in the output, or a short-circuit of the positive (+) and negative (−) wires from the speaker terminals, the protection circuit functions and this indicator flashes rapidly. If this occurs, switch the power OFF, find the cause of the trouble and correct it, and then switch the power ON once again.

❷ These selectors are used to select the range within which changes of tone control characteristics occur.

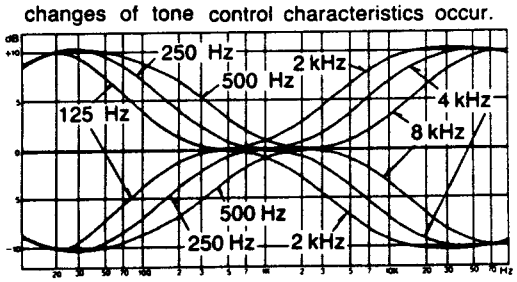

❸ This switch is used to switch the tone control circuit (bass, treble) ON or OFF.
defeat: Set to this position to switch the bass/ treble tone control circuit OFF. Regardless of the positions of the tone controls, the characteristics will remain flat.
tone on: Set to this position for adjustment of the tone quality with the tone controls.

❹ This button can be used to switch the mode to the source to be heard (or watched) as selected by one of the source selectors, or to the source to be recorded.
When this button is pressed, the recording-mode indicator flashes, and, when one of the source selectors is pressed, the indicator illuminates steadily. If the indicator flashes, the flashing can be stopped by pressing this button once again.
When the recording-mode indicator is not illuminated:
If one of the source selectors is pressed, the program source to be heard or watched and the recording source will both be switched at the same time.
Note, however, that only the program source to be heard or watched will be switched, and the tape can be monitored during recording, if the "tape 1/DA tape" or "tape 2/VCR" source selector is pressed.
When the recording-mode indicator is flashing:
This is the mode for selection of the source you want to record. If one of the source selectors is pressed, only the recording program source will be switched.
When the recording-mode indicator is illuminated:
This is the mode for listening to (or watching) one source while recording another source. If one of the source selectors is pressed, only the program source to be heard or watched will be switched.

❺ These buttons have two functions:
When the recording-mode indicator is not flashing or not illuminated, these buttons are used to select the program source to be heard or watched. (The signal is available at the speaker terminals and headphones jack.)
When the recording-mode indicator is flashing, these buttons are used to select the program source to be recorded. (The signal is available at the REC OUT terminals.)

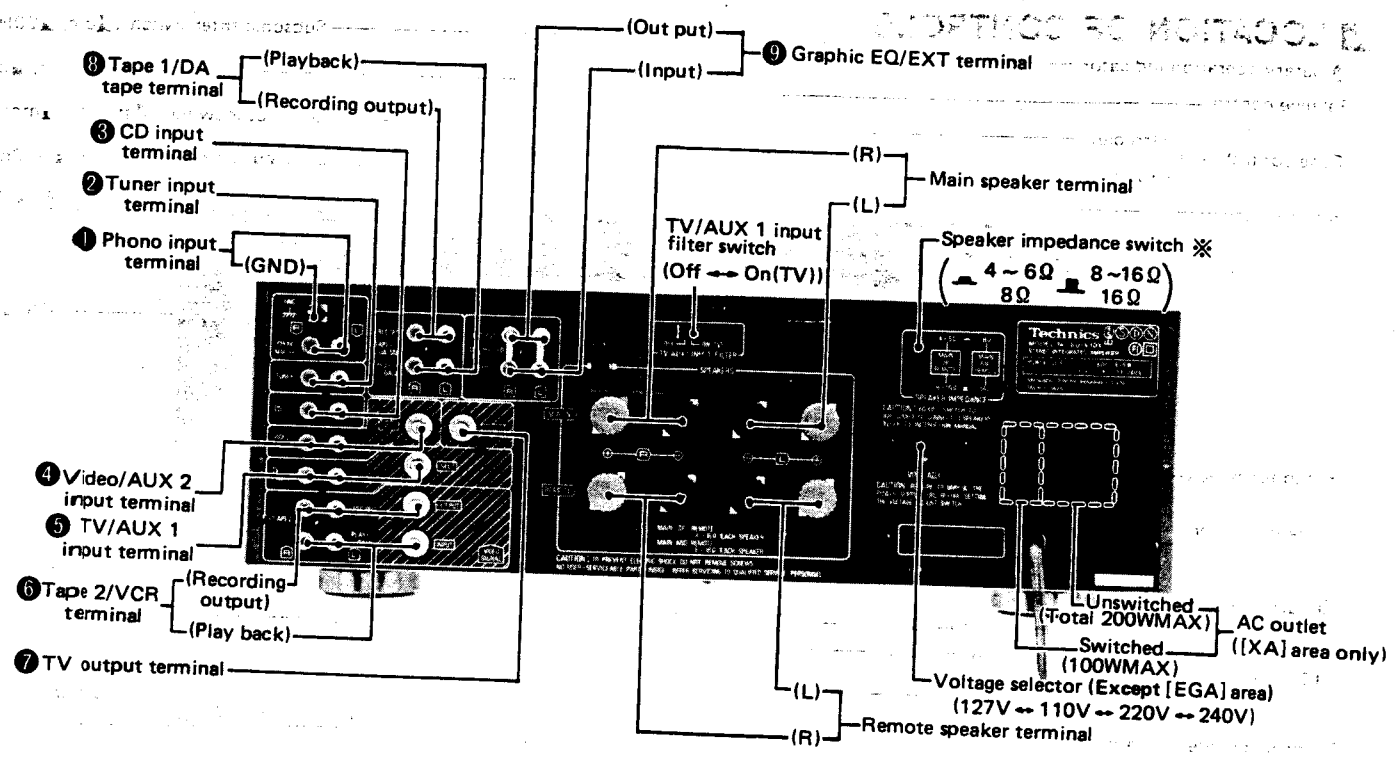

★ [EGA] area is provided without voltage selector.
★ Phono input capacitance it adout 150pF.

※ If only the main or the remote speaker system is used (4~16Ω):

4~6Ω (▟▁▁▙):
For speaker impedance of 4~6Ω.
8~16Ω (▁▁▟▙):
For speaker impedance of 8~16Ω.

■ If both the main and remote speaker systems (8~16Ω each speaker) are used:

1) If the impedance of both systems is 16 ohms, set the speaker impedance selector to "16Ω".
2) If the impedance of both systems is 8 ohms, or one is 8 ohms and the other is 16 ohms, set the speaker impedance selector to "8Ω".

■ VOICE AND VIDEO SIGNAL TERMINAL

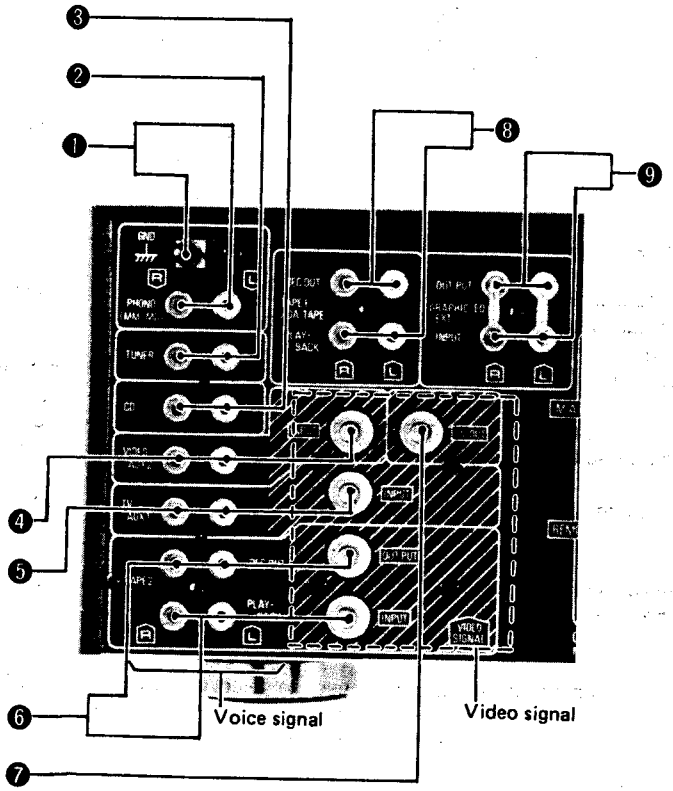

■ OPERATION

Standard operating procedures

1 Power: "on" (▮→▬)

Be sure to reduce the volume level to a low ("∞→60") position before switching ON the power.

2 Select the speaker systems to be used.

If sound from speakers is not wanted, set the speaker selectors to the "off" position.

Headphones (option)
Plug type:
1/4-inch phone plug, stereo type

Note: Set volume control to the minimum ("∞") position before connecting headphones.

After disc play or radio broadcast, etc. has started

- Adjust left/right volume balance.
- Press inward to the "20 Hz" position to eliminate ultra-low-frequency noise (turntable motor "rumble", etc.).
- Press inward to the "on" position when listening to music at a low volume level (for compensation of the bass range).
- Press inward to the "mono" position to listen to sound monaurally (when adjusting left/right volume balance, etc.).
- Press inward to the "−20 dB" position to temporarily reduce the volume level or for more precise control of the volume level.

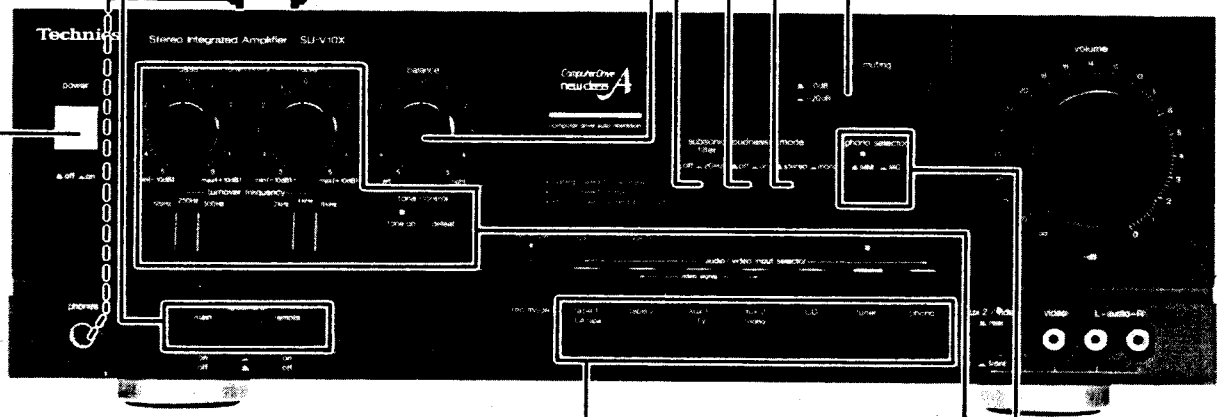

3 Select the program source.

(The picture and sound can be switched at the same time.)

tape 1/DA tape:
Press this button to listen to a tape or a digital-audio processor.

tape 2/VCR:
Set to this position for playback from a VCR or tape deck.

aux 1/TV:
Press this button to watch a TV.

aux 2/video:
Press this button to watch a video disc player, etc., is connected to the "VIDEO/AUX 2" terminals (on the front or rear panel).

CD:
Press this button to listen to a compact-disc.

tuner:
Press this button to listen to radio broadcasts.

phono:
Press this button to listen to phono discs.

4 Operate each component.

(Refer to the operating instructions for the other equipment used.)

5 Adjust the volume level and the tone quality.

- **Adjust the tone quality as desired.**
- **Select either "MM" or "MC" when listening to phono discs.**

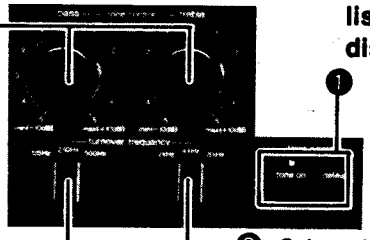

❶ **"tone on"**
If set to the "defeat" position, tone controls have no effect, and frequency response becomes flat.

❷ **Select the tone range.**

❸ **Adjust the tone quality.**

Suggestions

- If noise is very annoying while listening to an FM or AM broadcast, switch OFF the TV, compact-disc player and turntable.
- Switch OFF the TV power if noise is excessive while listening to an audio tape, compact disc or regular phono disc.
- If a striped pattern appears and makes viewing difficult, switch OFF the digital audio processor.

After use

After listening is finished, power switches of all equipment should be switched OFF.

■ RECORDING

With this unit, you can record an FM broadcast, etc. while watching TV, or record one sound source while listening to another. In addition, the "aux 2/video" terminals on the front panel can be used for easy audio or video tape editing.

1 Power: "on" (▮→▬)
Be sure to reduce the volume level to a low ("∞→60") position switching ON the power.

2 Select the speaker systems to be used.

3 Press.
The recording mode indicator will flash. (Refer to note 1.)

4 Select the desired program source for recording.
(The recording mode indicator and recording output signal indicator will illuminate.)

•Press this button in order to record from a tape deck connected to the "TAPE 1/DA TAPE" terminals to a tape deck connected to the "TAPE 2/VCR" terminals.

•Press this button in order to record from a tape deck connected to the "TAPE 2/VCR" terminals to a tape deck connected to the "TAPE 1/DA TAPE" terminals.

•Recording-mode selector

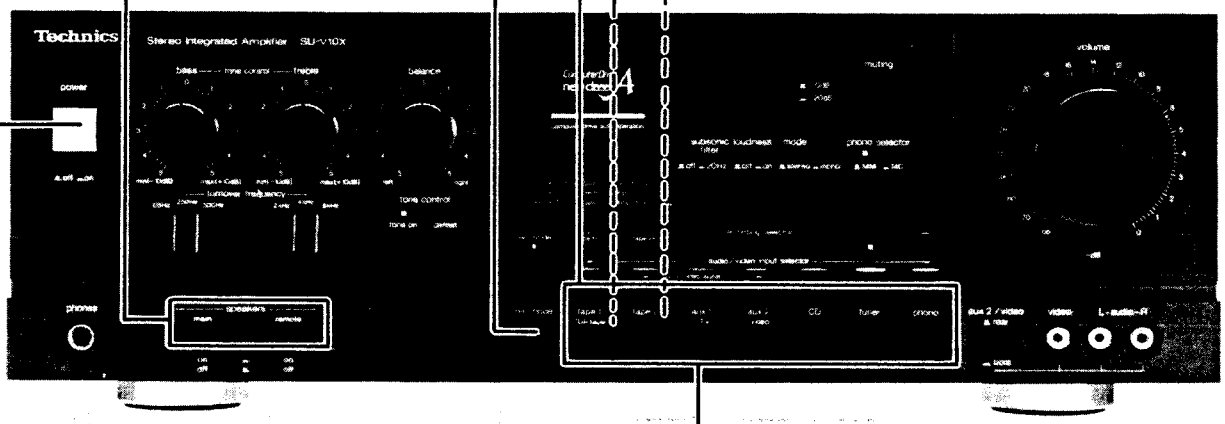

5 Begin recording.
By using the controls on the tape deck, adjust the recording level. Then begin recording.

6 Set to the position corresponding to the program source to be heard.
(One of the input signal indicators will illuminate.)

- **If the program source being recorded is selected:**
  The sound going to the tape deck will be heard.
- **If the tape deck making the recording is selected:**
  The sound going through the tape deck will be heard.
- **If some other sound source is selected:**
  The sound of the selected source can be heard. (This will not effect the recording which is being made.)

To record one program source and listen to another:
Follow steps 3 through 6.

Tape-to-tape recording of video tapes

A copy of a video tape can be made by connecting a video deck for playback to the "aux 2/video" terminals on the front panel.

Note:
Follow these steps in addition to step 4 above.•

❶ **Connect the VCR to be used for playback to the "aux 2/video" terminals on the front panel.**

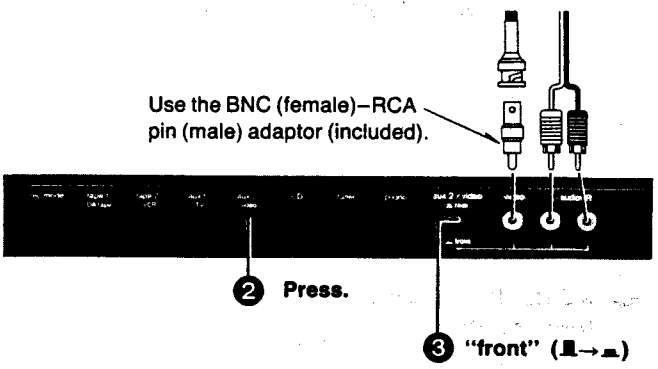

Notes:
1. While a recording is in progress:
   Do not press the recording-mode selector, because the recording will be interrupted and the recording source will be changed.
2. For timer recordings:
   Be sure to check that the recording-mode indicator is illuminated steadily (not flashing).
   Note that the recording might not be made if the recording-mode indicator is flashing.

● Placement on top of other equipment

To accomodate equipment of different depths, use the additional feet (included) to support this unit.

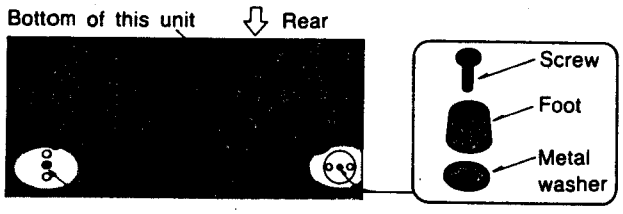

● If a TV is connected to this unit

● If speakers are placed near the television

Move the speakers away from the TV to a position where the picture is improved if the TV's picture color changes or distortion appears on the TV screen.
(This is not necessary, however, for shielded speakers.)

● If a turntable is placed near the TV

Place it on the right side of the TV.
TV magnetism might otherwise affect the record player's cartridge performance, causing interference noise.

■ PROTECTION CIRCUITRY

The protection circuitry may have operated if either of the following conditions is noticed:

- No sound is heard when the power is switched ON.
- Sound stops during a performance.

The function of this circuitry is to prevent circuitry damage if, for example, the positive and negative speaker connection wires are "shorted" , or if speaker systems with an impedance less than the indicated rated impedance of this unit are used.
If this occurs, follow the procedure outlined below:

1. Switch OFF the power.
2. Determine the cause of the problem and correct it.
3. Switch ON the power once again.

Note:

When the protection circuitry functions, the unit will not operate unless the power is first switched OFF and then ON again.

■ BEFORE REPAIR AND ADJUSTMENT

(1) Turn off the power supply. Using a 10Ω, 5W resistor, shortcircuit both ends of power supply capacitors(C901~ 904, 10000μF) in order to discharge the voltage.

(2) Before turning the power supply on, after completion of repair, slowly apply the primary voltage by using a power supply voltage controller to make sure that the consumed current at 50/60 Hz in NO SIGNAL mode should be shown below with respect to supply voltage 110V/127V/220V/240V.

Power supply voltage	AC110V	AC127V	AC220V	AC240V
Consumed current 50/60Hz	270 ~ 730mA	250 ~ 670mA	135 ~ 370mA	125 ~ 340mA

■ DISASSEMBLY INSTRUCTIONS

Ref. No. 1	How to remove the cabinet
Procedure 1	1. Remove the 7 screws (❶~❼)

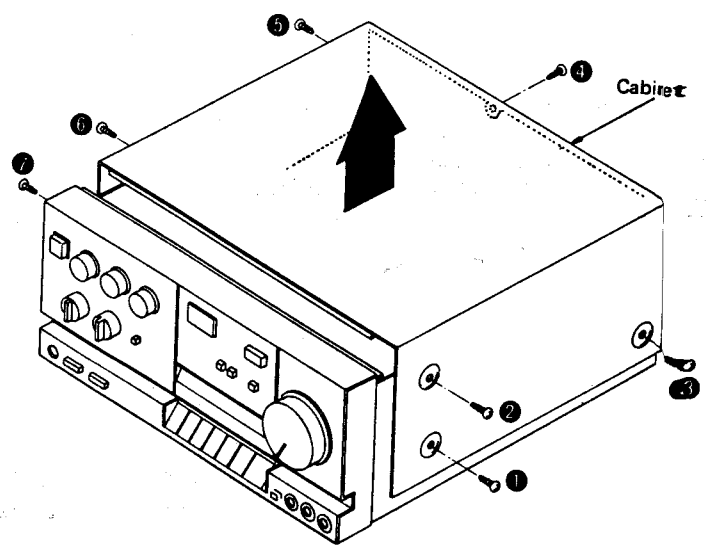

Ref. No. 2	How to remove the front panel
Procedure 1 ➡2	Remove the 5 screws (❶ ~ ❺) and 4 nuts (❻ ~ ❾).

2. Remove the front panel (refer to the arrow).

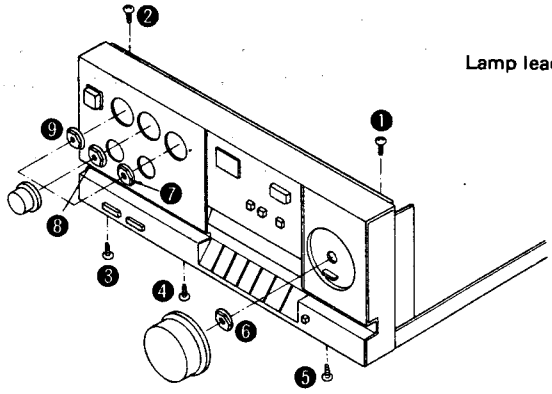

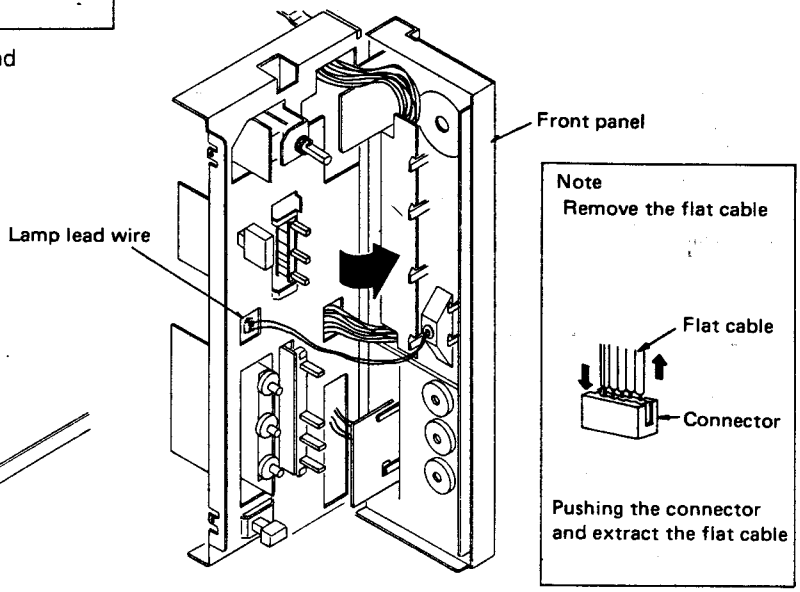

Ref. No. 3	How to remove the sub panel
Procedure 1 ➡ 2 ➡3	1. Push down the 10 tabs (up side)and Push up the (under side)of sub panel.

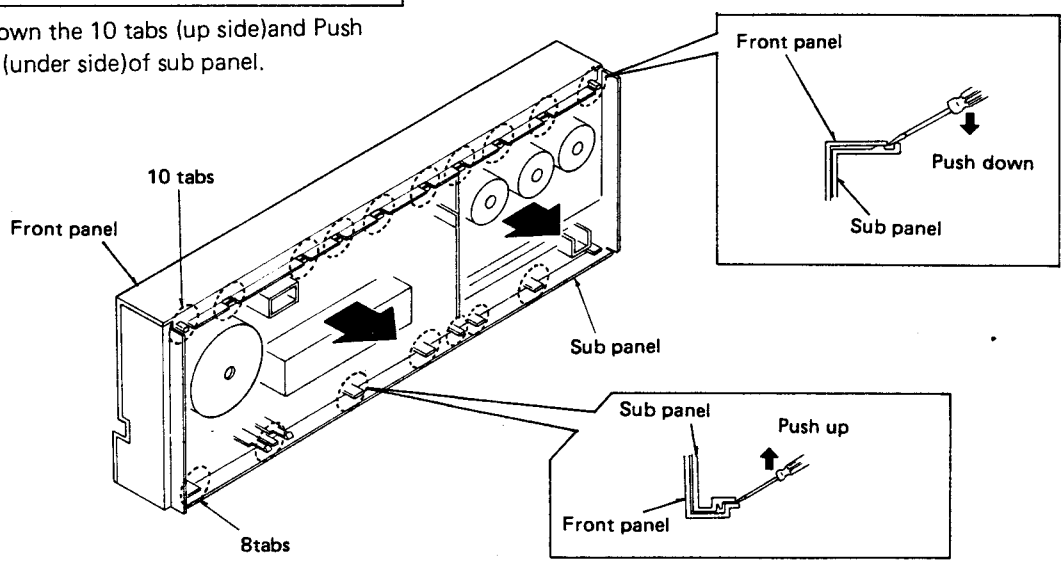

Ref. No. 4	How to remove the AUX2/VIDEO P.C.B and speaker selector P.C.B
Procedure 2➡3➡4	1. Pull the 3 tabs (up side) and 4 tabs (under side) of AUX2/VIDEO Input P.C.B.

2. Pull the tab (up side) and 2 tabs (under side) of Speaker selector P.C.B.

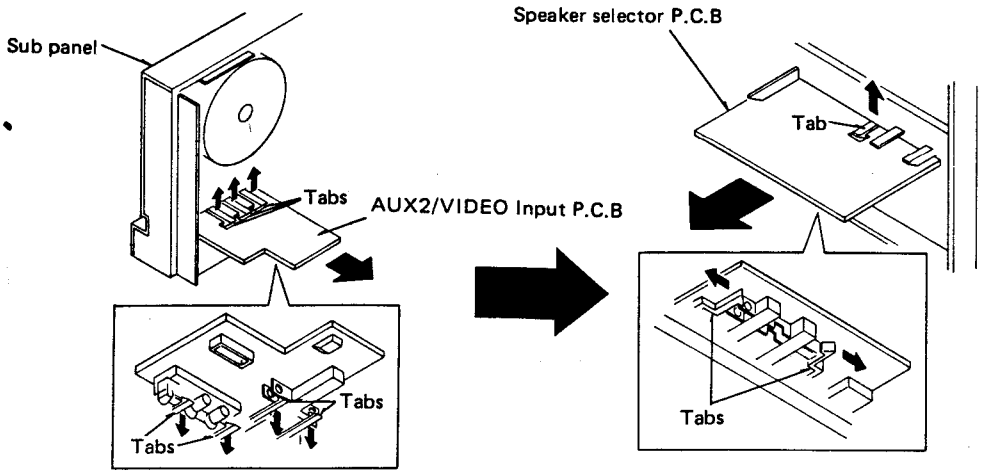

Ref. No. 5	How to remove the indicator panel
Procedure 1➡2➡3➡4➡5	1. Pull the 4 tabs of indicator panel.

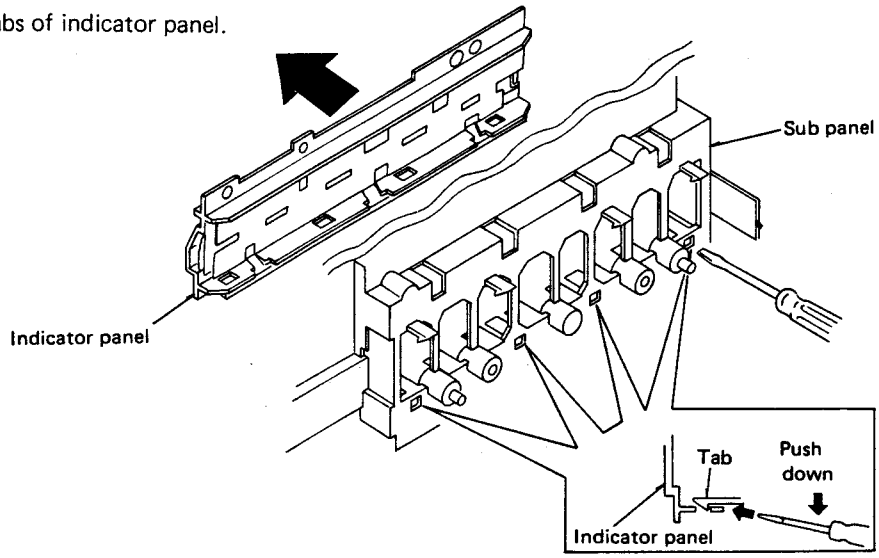

Ref. No. 6	How to remove the selector button and selector P.C.B
Procedure 1➡2➡3➡4➡5➡6	1. Remove the 3 screws (❶~❸) of selector button. 2. Remove the 3 screws (❹~❻) of selector P.C.B.

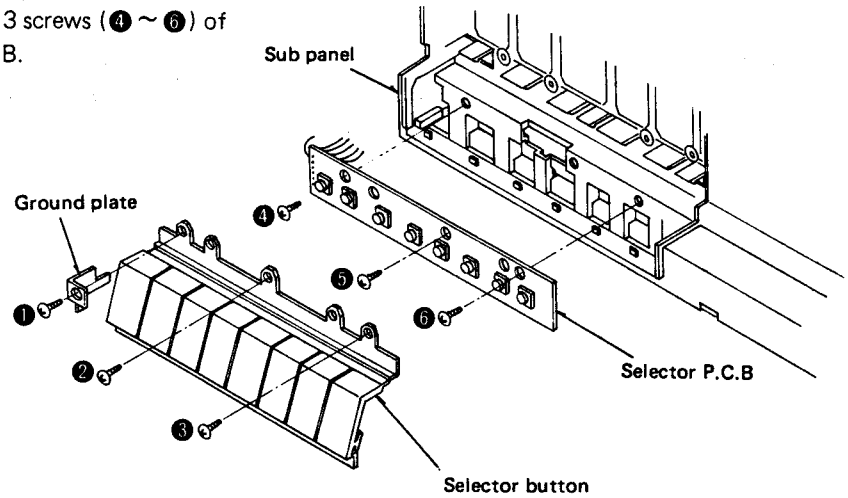

Ref. No. 7	How to remove the bottom board
Procedure 7	1. Remove the 4 screws (❶~❹).

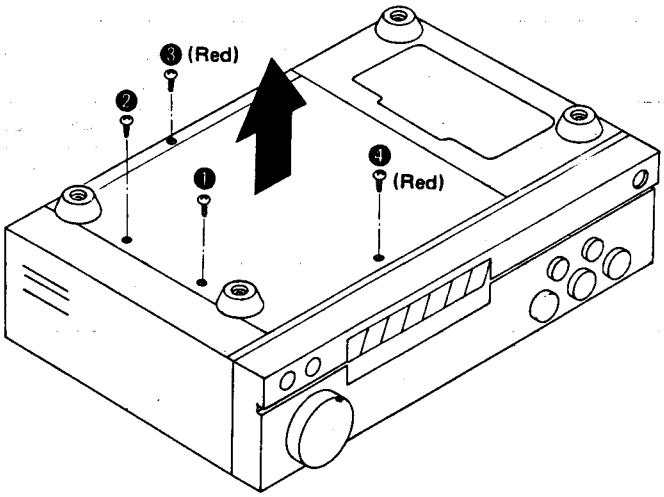

Ref. No. 8	How to remove the power transistor
Procedure 1 ➡ 7 ➡ 8	1. Remove the 2 screws (❶, ❷) of bracket and screw (❸) of hold bracket.

2. Unsolder the power transistor.
3. Remove the 2 screws (❹, ❺) of heat shink.

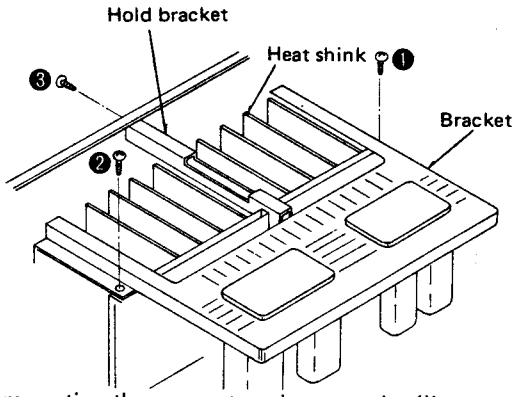

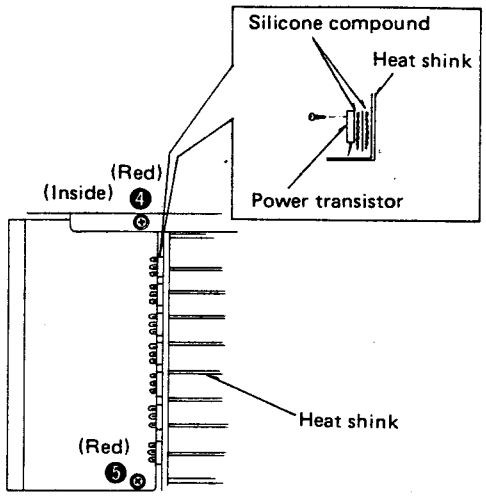

- When mounting the power transistor, apply silicone compound (SZZ0L15) to the rear side of power transistor.

■ FUNCTION OF TERMINAL (Icq Controller IC801 : MN1421STA)

Pin No.	Mark	Name of block	Description of terminal
1	Vss	Power supply input terminal	Ground
2	CO9	Output	It delivers Icq control signal through input port A (❾) (thermal sensor) and input port B (⓫, ⓬)(signal sensor). [Output "H"]
3	CO8		
4	CO7	——	——
5	CO6		
6	CO5		
7	AI3		
8	AI2		
9	AI1	Input	When 60°C (140°F) sensor of power amplifier operates, the input level becomes "L".
10	AI0	——	Ground
11	BI3	Input	Input level changes to "L" as effective output 2V signal sensor of power amplifier operates.
12	BI2		Input level changes to "L" as effective output 5V signal sensor of power amplifier operates.
13	BI1	——	——
14	BI0		
15	EO0	——	——
16	EO1		
17	EO2		
18	EO3	Output	Indicator "Computer drive auto operation" light up at "H" output.
19	TST	Test input terminal	Terminal for testing LSI (Grounded)
20	RST	Reset input terminal	All outputs are cleared or reset with input at "L" (It is connected to power supply circuit)
21	SNS0	——	Not used in this unit
22	SNS1	Input	Input level changes to "H" as power amplifier output short-circuit operates.

Pin No.	Mark	Name of block	Description of terminal
23	PRE HEAT	——	No used
24	DO1	——	Ground
25	DO2		
26	DO3	Output	Output relay turns ON with output at "H"
27	VDD	Power supply input terminal	Apply 5V.
28	OSC	OSC input terminal	Clock signal (about 300 kHz) can be obtained by internal oscillation circuit.

■ FUNCTION OF TERMINAL (Analog Function Control IC251 : μPD7506C043)

Pin. No.	Symbol	Input/Output	Active	Description of terminal
1	P43	—	—	Not used in this unit.
2	x 2	—	—	Not used in this unit.
3	P03/x 1	Input	—	It detects the level of pin ⑤. Push (once) the "rec selector" 4.3V 0V Selection of input selector
4	P20/PSTB	Output	H	Clock output port for analog switch. Clock signal output to IC201 pin ⑮ and IC202 pin ⑮ during data transmission. [Refer to A]
5	P21/PTOUT	Output	H	Indicater "rec selector" light up at "H". Push (once) the "rec selector" 4.3V 0V Selection of input selector
6	P22	Output	H	Data output for analog switch. Data signal output to IC201 pin ⑯ and IC202 pin ⑯. [Refer to A]
7	P23	Output	H	Strobe output port for analog switch. Strobe signal output to IC201 pin ⑬ and IC202 pin ⑬ during data transmission. [Refer to A]
8	P60	Output	H	Rec side indicator 3-bit output. Rec indicator drive signal output to IC253 pins ⑬ ~ ⑮. [Refer to B]
9	P61			
10	P62			
11	P63	Input	H	Stop mode sensing input. With high pulse signal input, the stop command is executed and the mode is shifted to standby. 4.4V 0V Power switch "OFF".
12	CL1	—	—	External clock oscillation frequency (400KHz) input port. [Refer to C]
13	CL2	—	—	Not used in this unit.
14	V_{DD}	—	—	Power supply input terminal. (Apply 4.4V)
15	RESET	Input	H	Input terminal for reset signal. Power switch "ON" 4.3V 0V Power switch "OFF" 1V 0V
16	P10	Input	H	Input terminal for key return signal from external key matrix. [Refer to D]
17	P11			
18	P12			
19	P13			
20	P50	Output	H	Output terminal for key scan signal for external key matrix. (Output voltage is 4.3V)
21	P51			
22	P52			
23	P53	Output	H	Muting signal output during input switch or Rec switch operation. 4.3V 0V Push the each input selector or muting switch.
24	P00	Input	—	Mode shifting port. H = Function 1 mode, L = Function 2 mode. The input of this unit is "H" (4.9V) because the mode used is Function 1.
25	P40	Output	H	Input side indicator 3-bit output. Input indicator drive signal to IC254 pins ⑬ ~ ⑮. [Refer to E]
26	P41			
27	P42			
28	V_{SS}	—	—	Ground terminal.

C IC251 ⑫ 2V DIV/1 μSEC

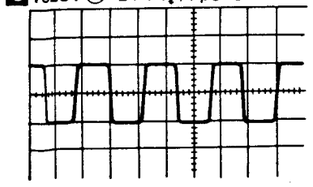

① Push the rec selector switch. ("rec indicator" blinking)
② Push the each input selector switch.

B

L = 0V, H = 4.3V

Input selector \ Pin No. of IC251	⑧	⑨	⑩
phono	L	H	L
tuner	H	L	L
CD	L	H	L
video/aux	H	H	L
tape 2	H	L	H
tape 1/DA tape	L	L	H

D

L = 0V, H = 4.3V

Input selector \ Pin No. of IC251	⑯	⑰	⑱	⑲
phono	L	L	L	H
tuner	L	L	H	L
CD	L	H	L	L
video/aux	H	L	L	L
tape 2	L	L	H	L
tape 1/DA tape	L	L	L	H
rec selector	H	L	L	L

A

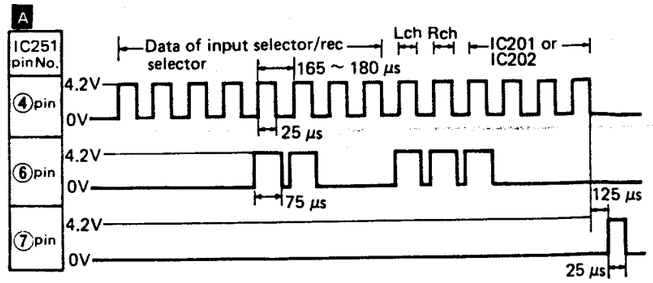

E

Input selector \ Pin No. of IC251	㉕	㉖	㉗
phono	L	L	L
tuner	H	L	L
CD	L	H	L
video/aux	H	H	L
tape 2	H	L	H
tape 1/DA tape	L	L	H
rec selector	L	L	L
muting	L	4.3V 0V	L

■ TERMINAL GUIDE OF TRANSISTORS, DIODES AND IC'S

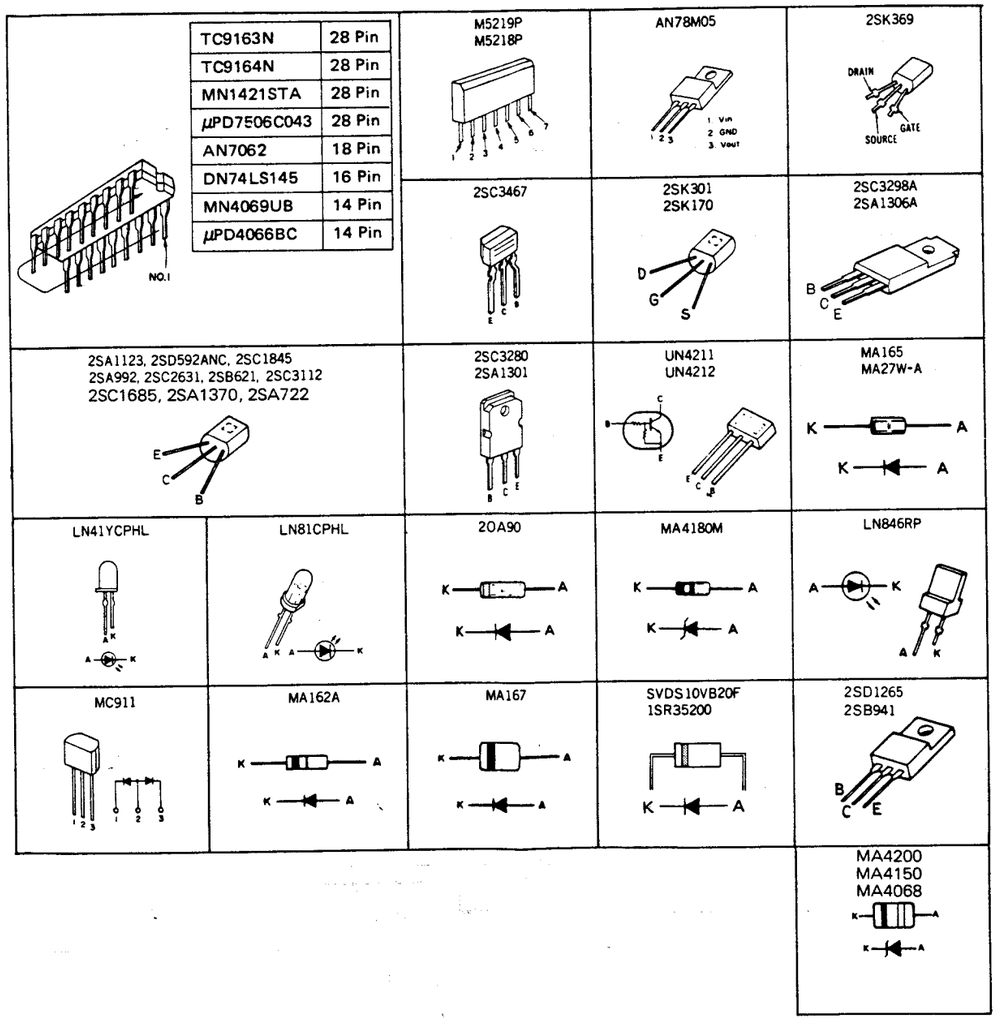

⑥	㉗
–	L
–	L
H	L
H	L
L	H
L	H
L	L
4.3V 0V	L

■ HOW TO REPLACE IC'S (Small outline type)

	Replacing procedure		Cautions
1	Reduce the amount of solder on each pin of the integrated circuit by use of a solder sucker.	(Example) H–130 	• **Recommended tool** .....Special soldering iron *H605M and H—130. *H605E and H—130. • Do not touch the soldering iron to the area for a long time. It may otherwise cause removal of the print foil. • When shifting the pin upward, do the job quickly while the solder is melting. If the solder is hard, it may cause removal or breakage of the print foil. • When using a pencil type soldering iron. 1. Completely remove the solder from each IC pin by use of solder sucker. 2. Raise each pin by means of an eyeleteer, hold the pliers then remove IC package from P.C.B.
2	Melt the solder on the pin (one electrode) with the soldering iron.		
3	While the solder is melting, shift the pin upward by the soldering iron to remove it from the foil.	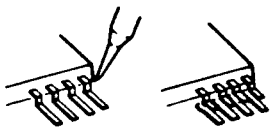	
4	Remove each pin from the foil according to the above-mentioned procedure.	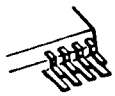	

* **Special soldering iron**
(Refer to Technical Information, ORDER NO. GAD84125486T1)...For U.S.A. and Canada
(Refer to Technical Information, ORDER NO. GAD84115476T8)...For others

- **H–605 Spot Heater (hot-air solder iron)**

This device that uses hot air to melt solder was developed to remove Flat-Pakage ICs, RHCs and chip parts.

- H—605M (For 120V power source)
- H—605E (For 200V/220V/240V power source)

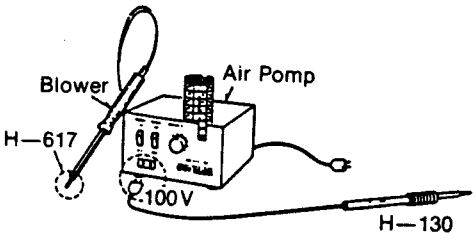

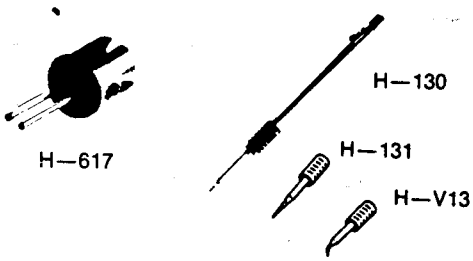

- **H–617 Twin Nozzle (for spot heater)**

Special nozzle for the removal of RHCs and chip resistors.
(Nozzle diameter : 1.0 mm x 2)

- **H–130 Slim Pencil Solder Iron**

An ultrasmall ceramic heater solder iron is extremely handy for soldering chip parts, RHCs, ICs, etc., to high-density circuit boards.
Features:

- Rated power: 100V, 15W
- Max. temp.: 400°C
- Heater: ceramic (long life)
- Insulation resistance: 100MΩ
- Length: 178 mm
- Weight: 16 g (not including cord)

- **H–131, H–V13 Cap Bits**

Solder tip for the slim pencil Solder Iron and is composed of a bit holder and a corrosion resistance solder tip.
Permits changing of solder tips even while still hot.

- Solder tip: 0.3 mm

■ WIRING CONNECTION DIAGRAM

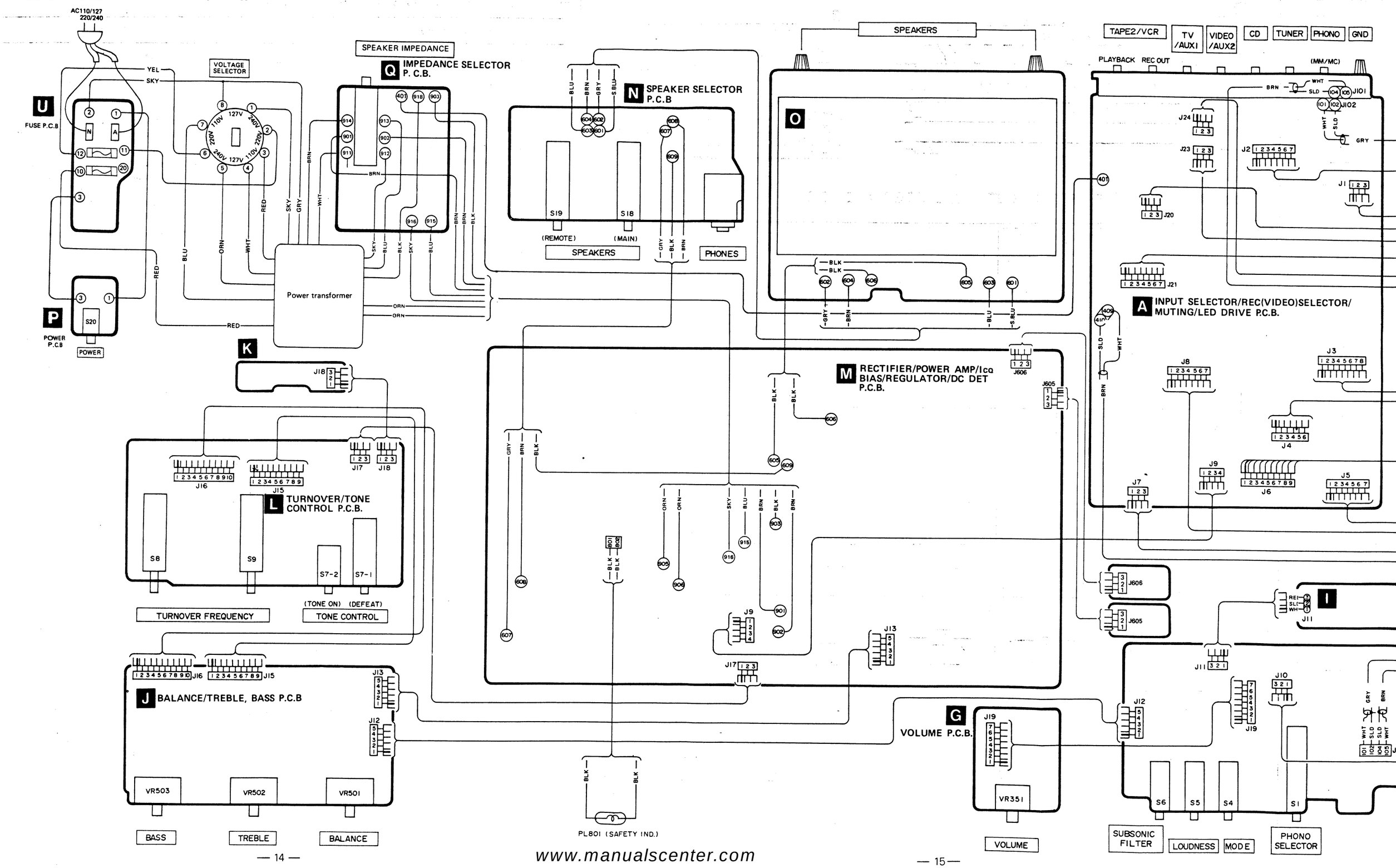

SU-V10X

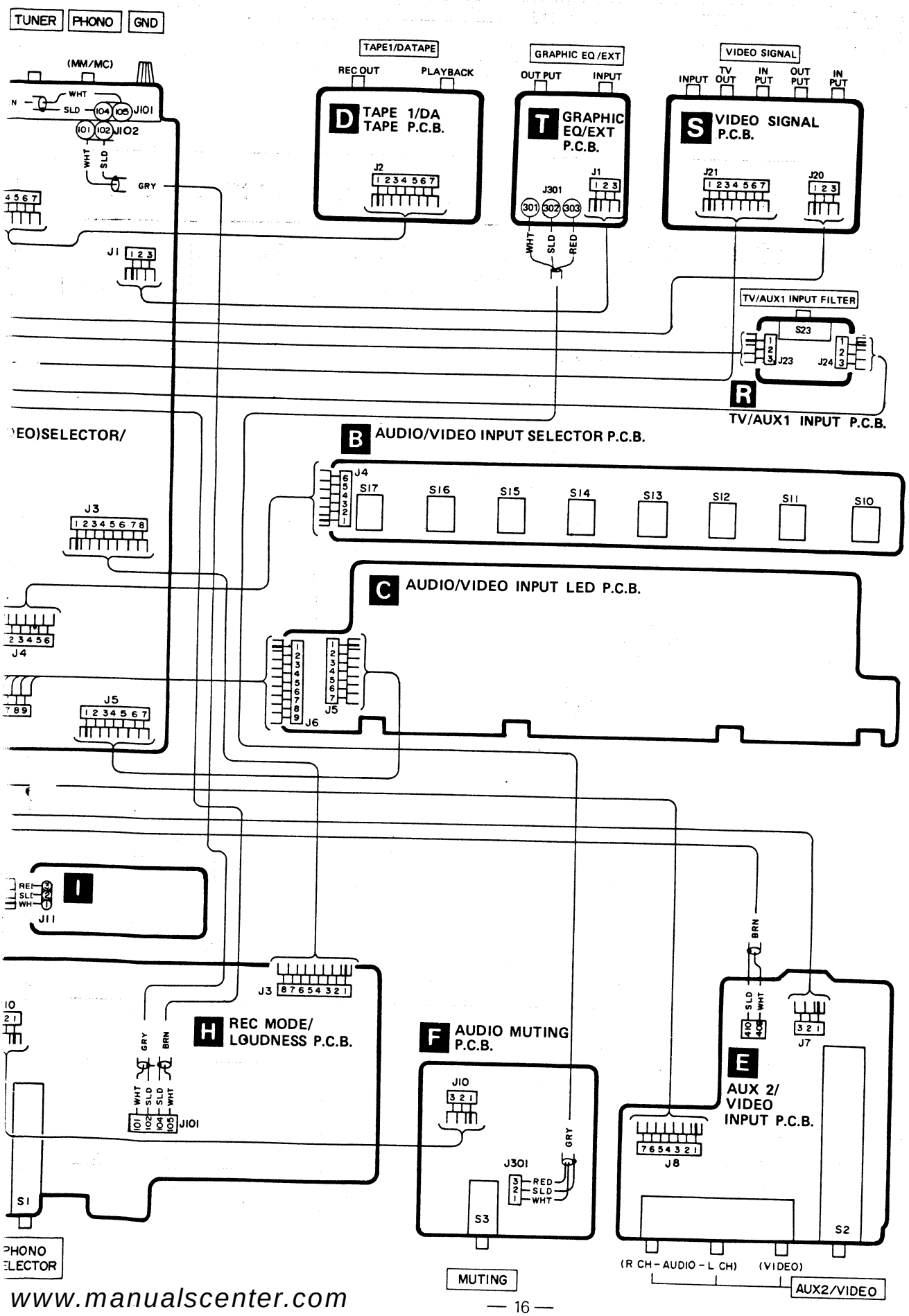

■ PRINTED CIRCUIT BOARDS

N SPEAKER SELECTOR P.C.B.

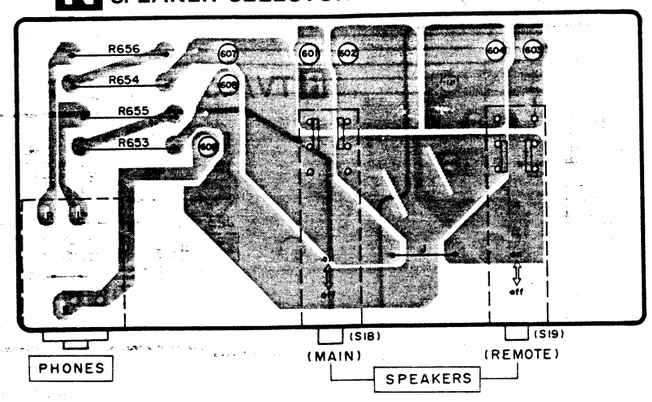

O

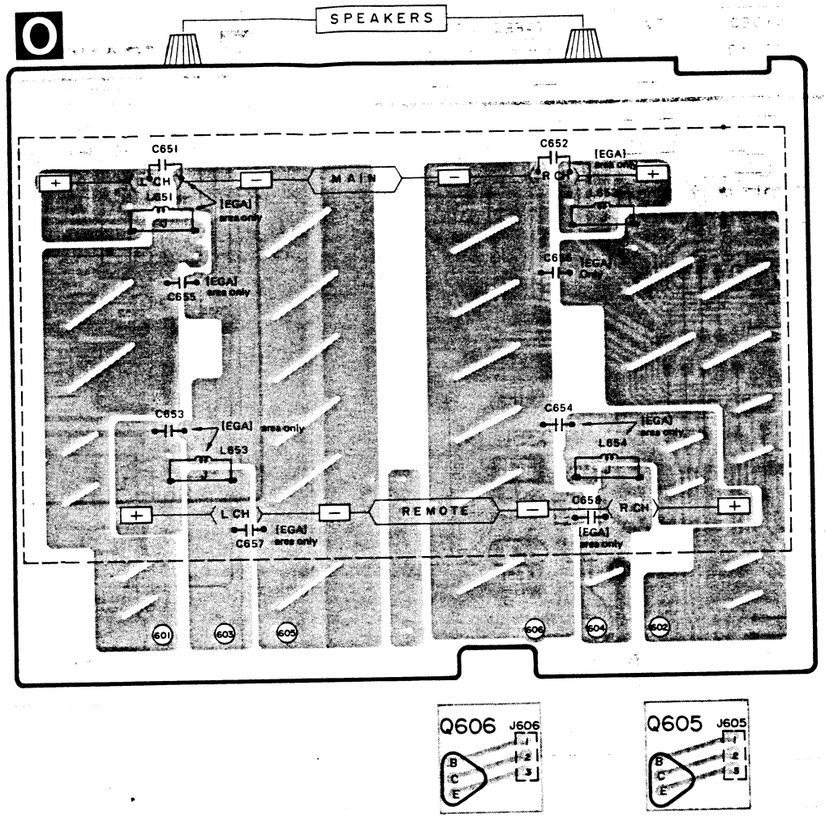

M RECTIFIER/POWER AMP/Icq BIAS/REGULATOR/DC DET P.C.B.

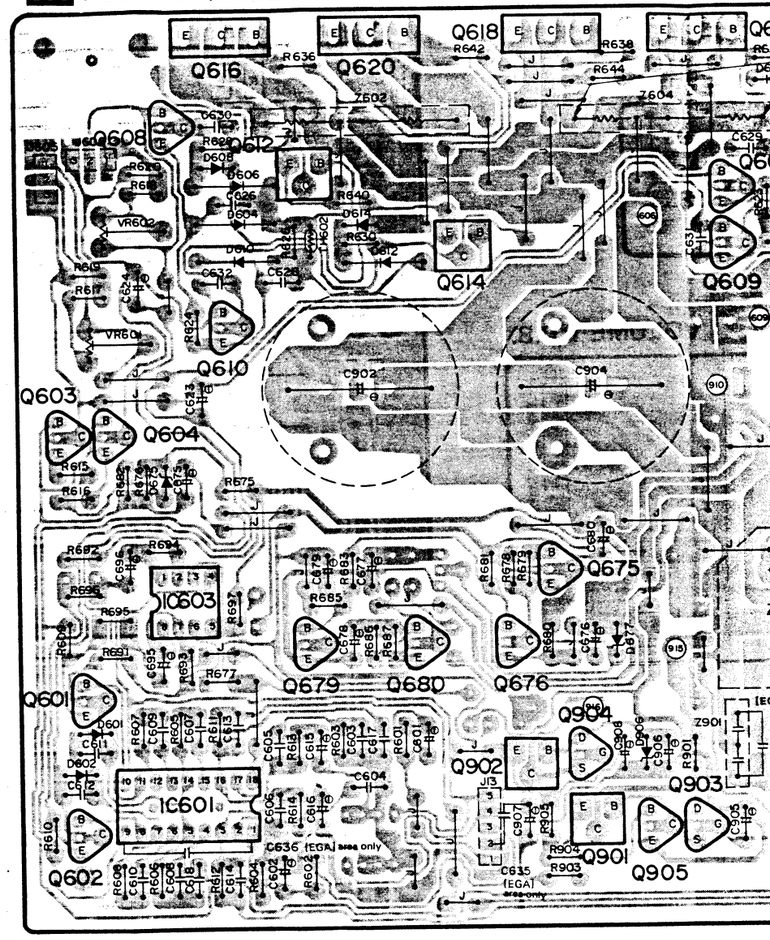

K

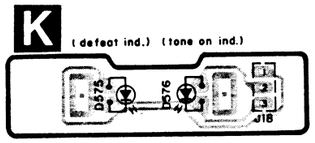

I

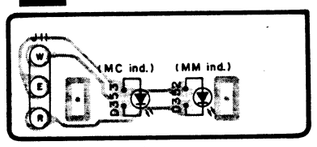

B AUDIO/VIDEO INPUT SELECTOR P.C.B.

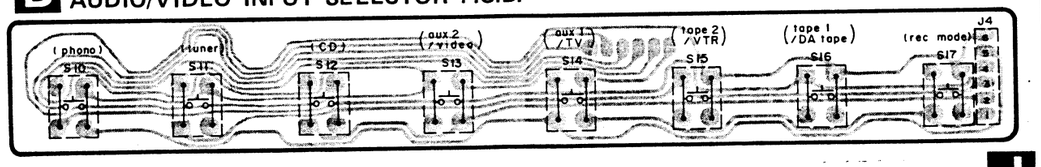

C AUDIO/VIDEO INPUT LED P.C.B.

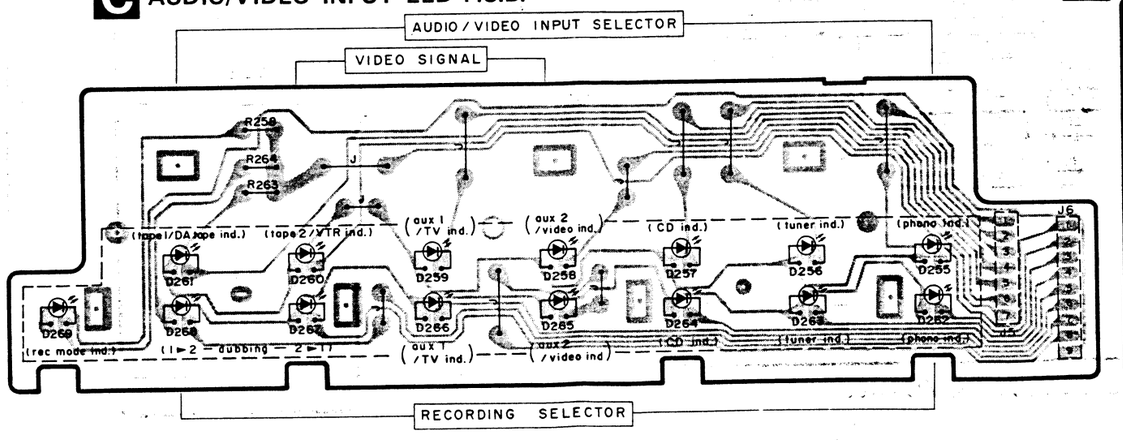

P POWER P.C.B.

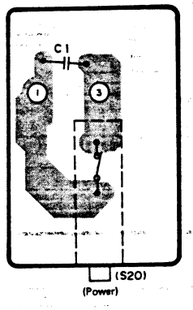

J BALANCE/TREBLE, BASS P.C.B

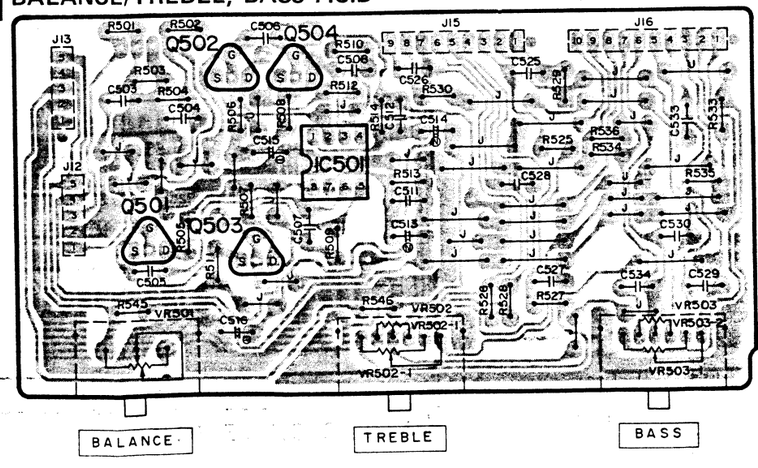

ULATOR/DC DET P.C.B.

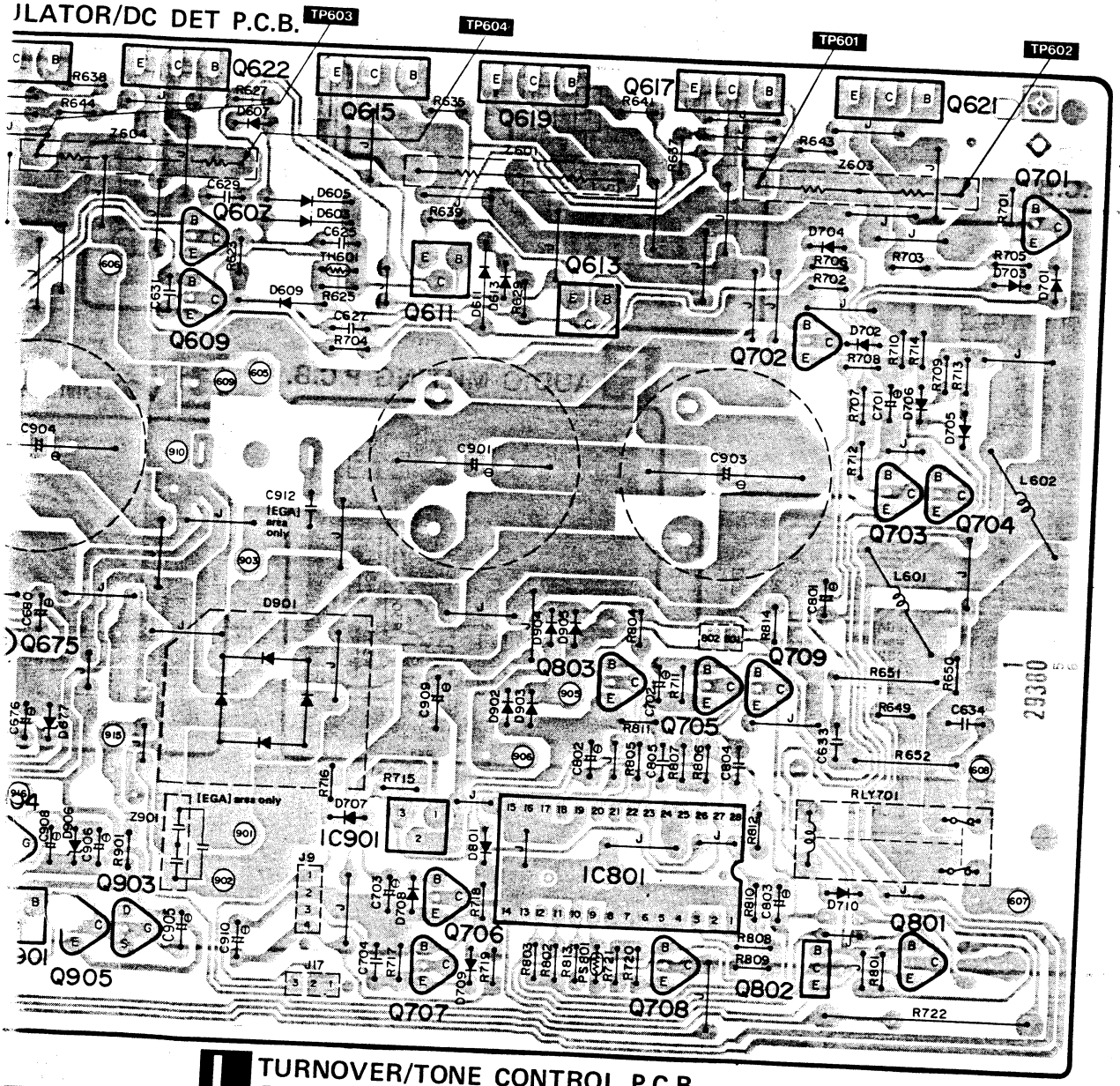

L TURNOVER/TONE CONTROL P.C.B.

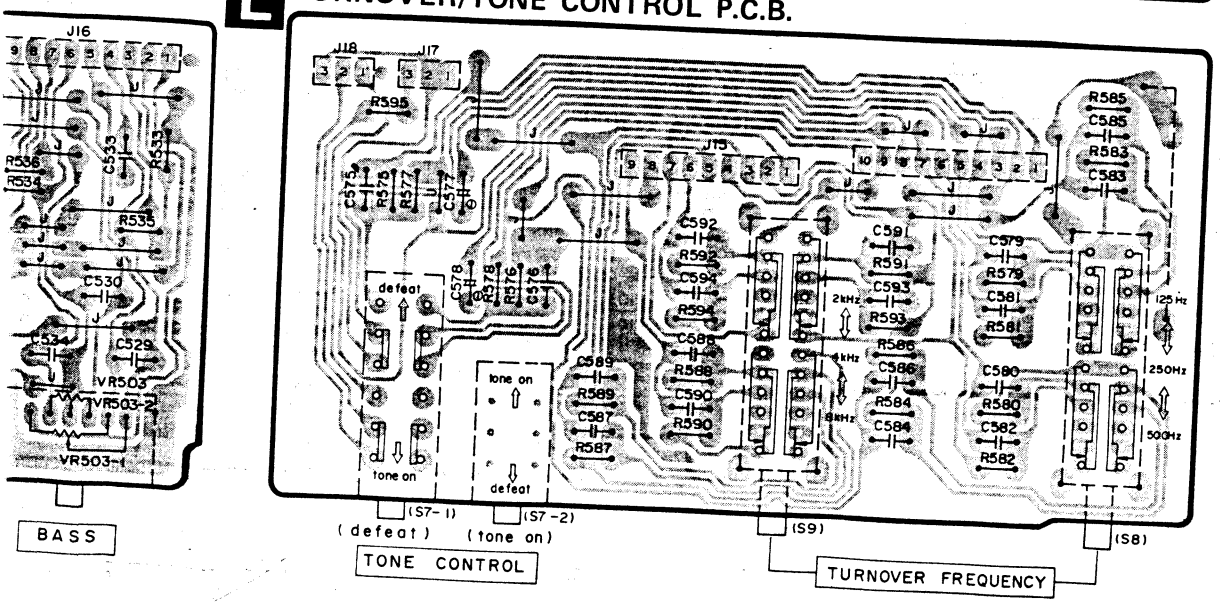

E AUX 2/VIDEO INPUT P.C.B.

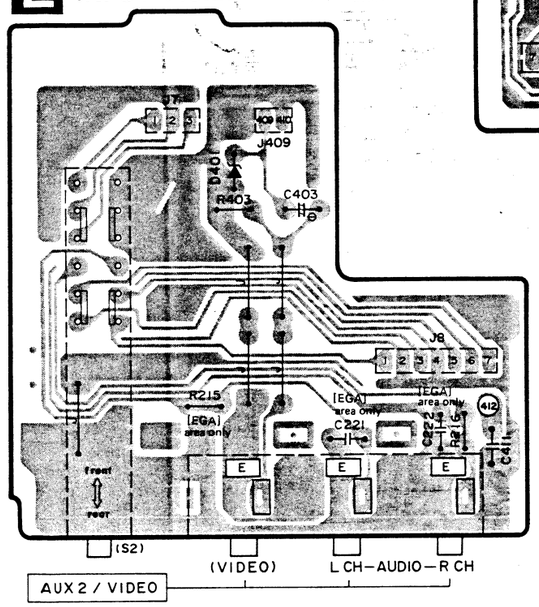

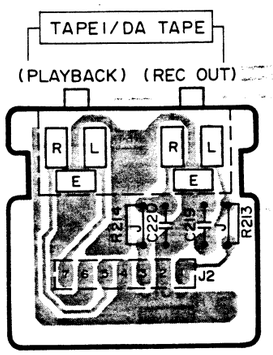

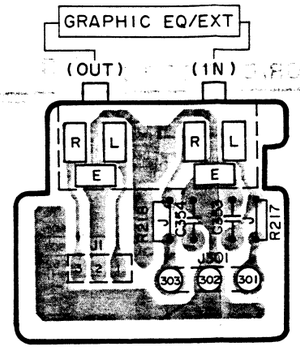

F AUDIO MUTING P.C.B.

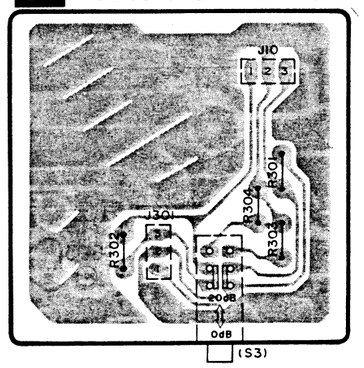

G VOLUME P.C.B.

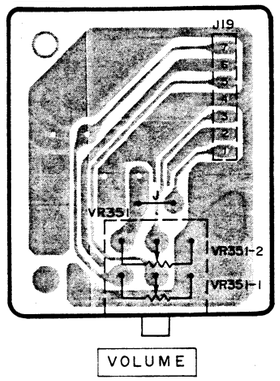

H REC MODE/LOUDNESS P.C.B.

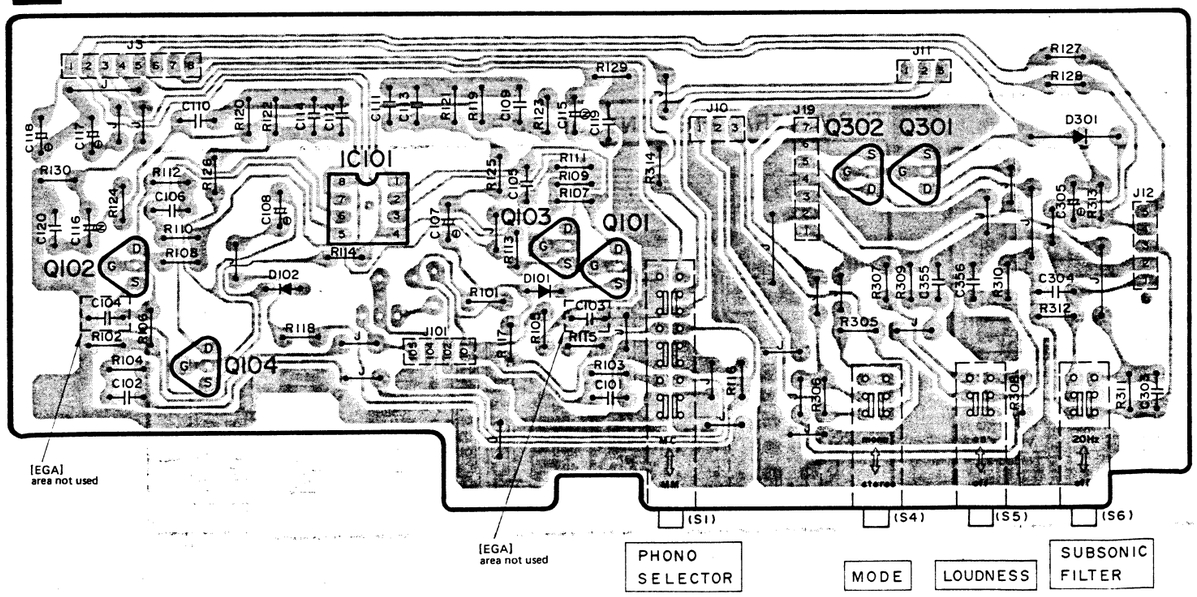

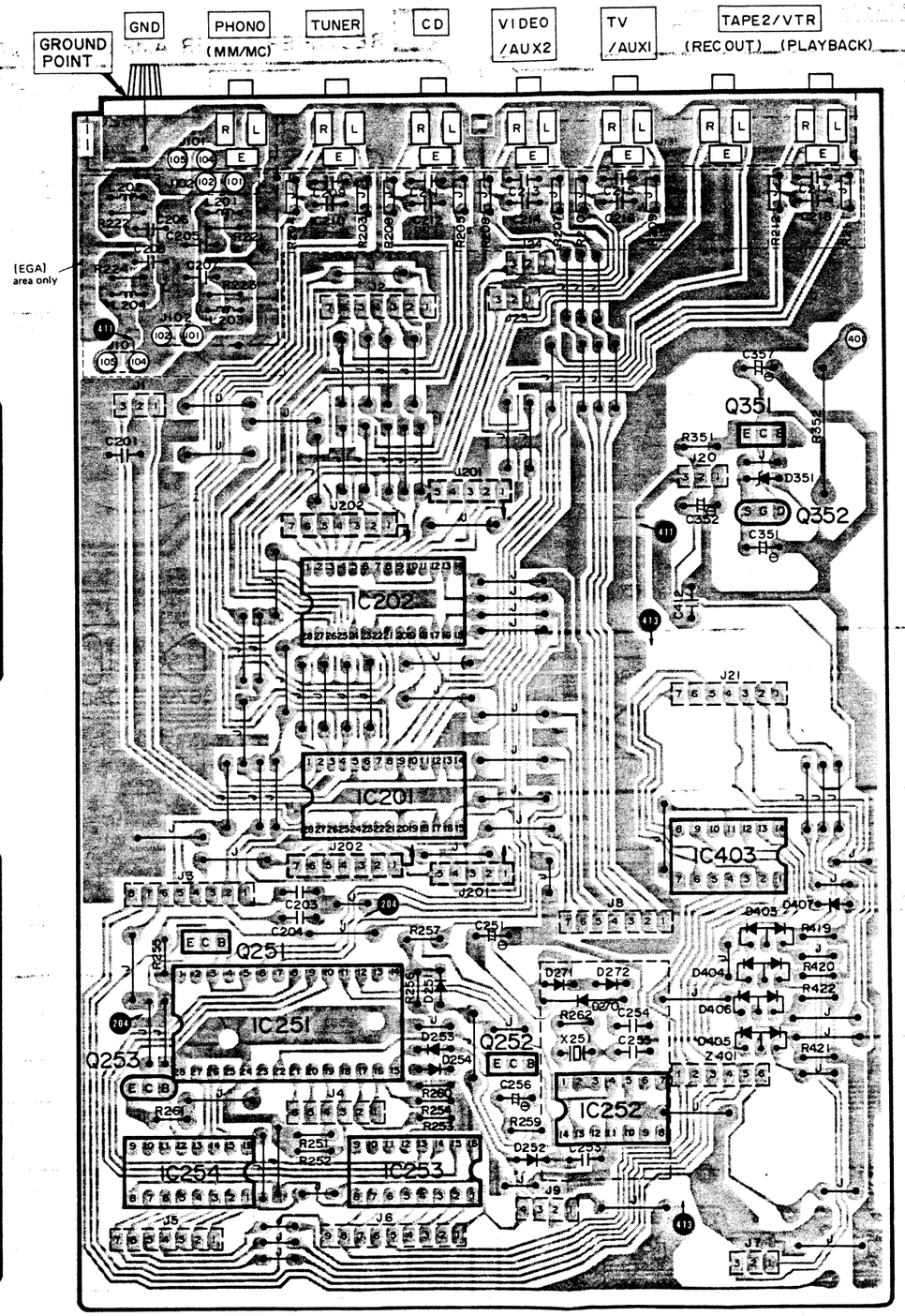

A INPUT SELECTOR/REC(VIDEO)SELECTOR/MUTING /LED DRIVE P.C.B.

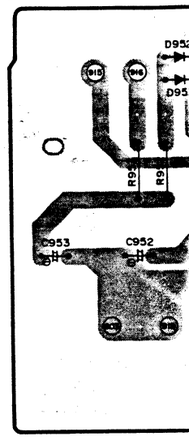

Q MPEDANCE SELECTOR P.C.B.

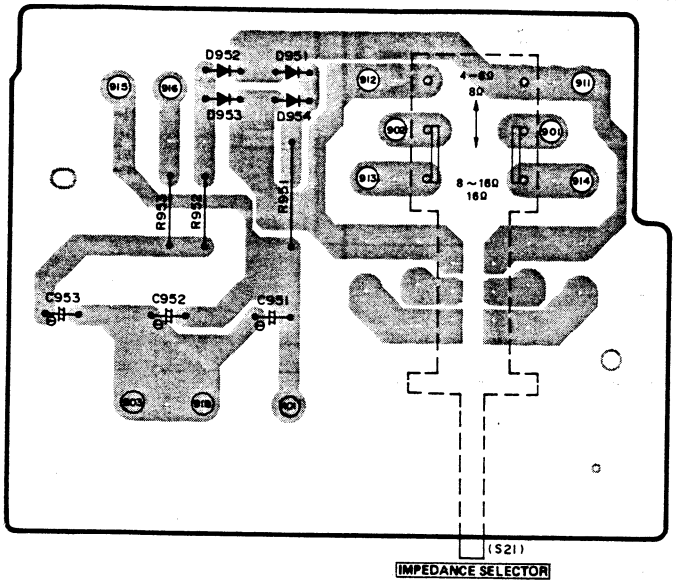

R TV/AUX1 INPUT FILTER P.C.B.

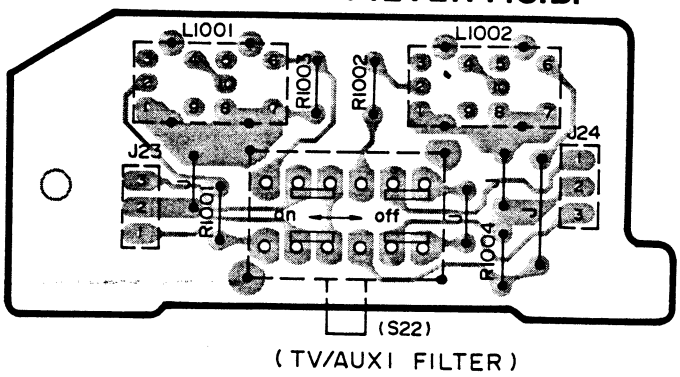

U FUSE P.C.B.

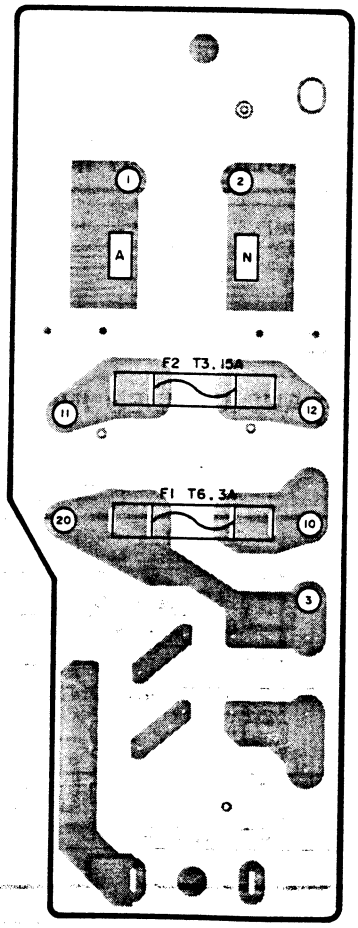

S VIDEO SIGNAL P.C.B.

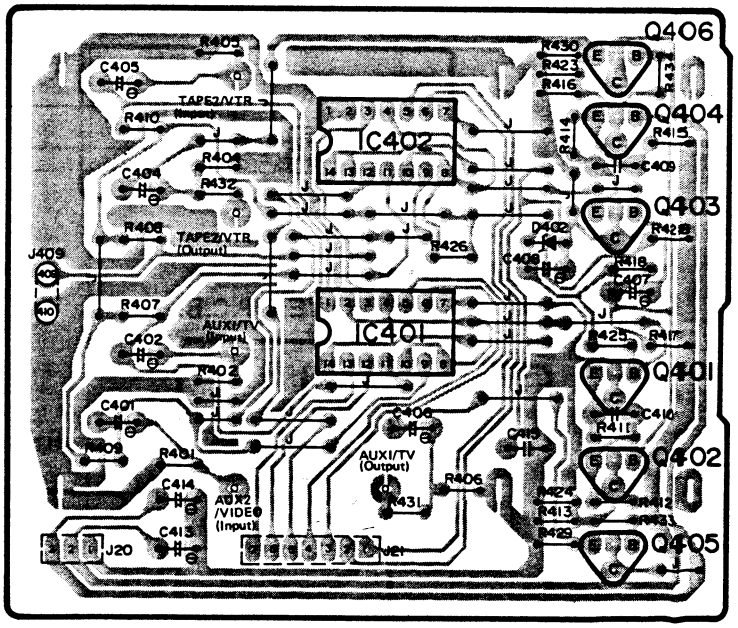

■ MEASUREMENT AND ADJUSTMENTS

Control positions and equipment used

- Volume knob . . . . . ∞
- Main speaker selector . . . . . off
- Remote speaker selector . . . . . off
- Recording selector . . . . . aux 1/TV
- Speaker impedance swith. 16Ω
- AC and DC electronic voltmeter (EVM)
- Signal generator
- Resistor (0.33Ω)

Idling (ICQ) Adjustment

1. Test equipment connection is shown in figure.
2. Turn the ICQ control volume (VR601, VR602) counter-clockwise.
3. After turning the power switch "on", adjust **VR601** (left channel) and **VR602** (right channel) about **20mV** respectively as in Fig. 1.

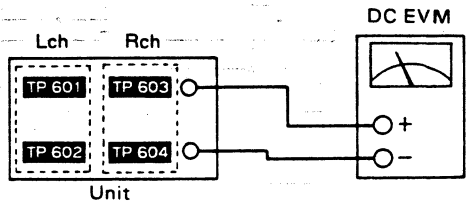

Overload detection circuit check

1. Test equipment connection is shown in figure
2. Apply 1 kHz, 8 mV (output about 5 V) signal to the aux. input terminal (aux 1/TV).
3. The speaker switch turned "off".
4. Connect 0.33 Ω (about 1 W) resistor to main speaker terminal.
5. With main speaker switch turned "on", make sure that
   - relay is "OFF" and
   - computer drive auto operation blinks.
6. Also check the right (R) channel in the same manner as mentioned above.

(Note) When turning the relay on again, wait for a while after turning the power supply OFF.
Otherwise, it will not be reset even when the circuit and load are in normal conditions.

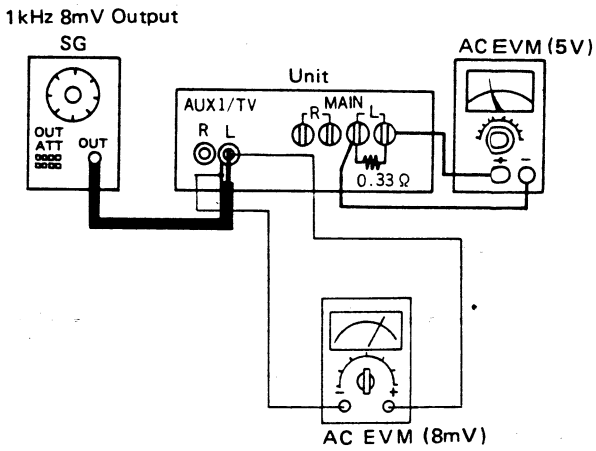

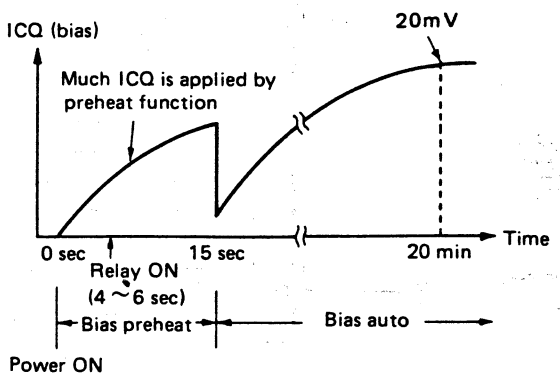

[Fig. 1]

● **Adjustment points**

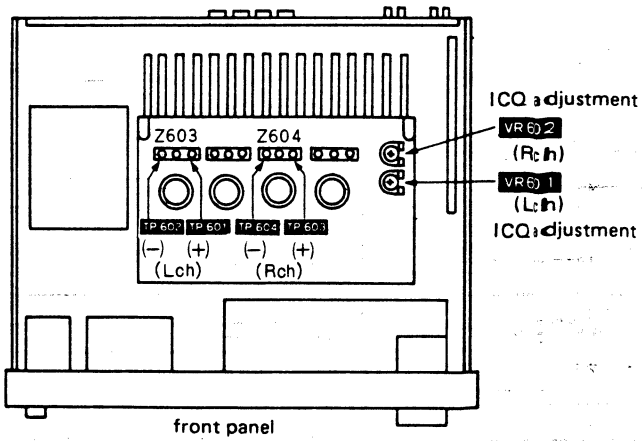

■ BLOCK DIAGRAM

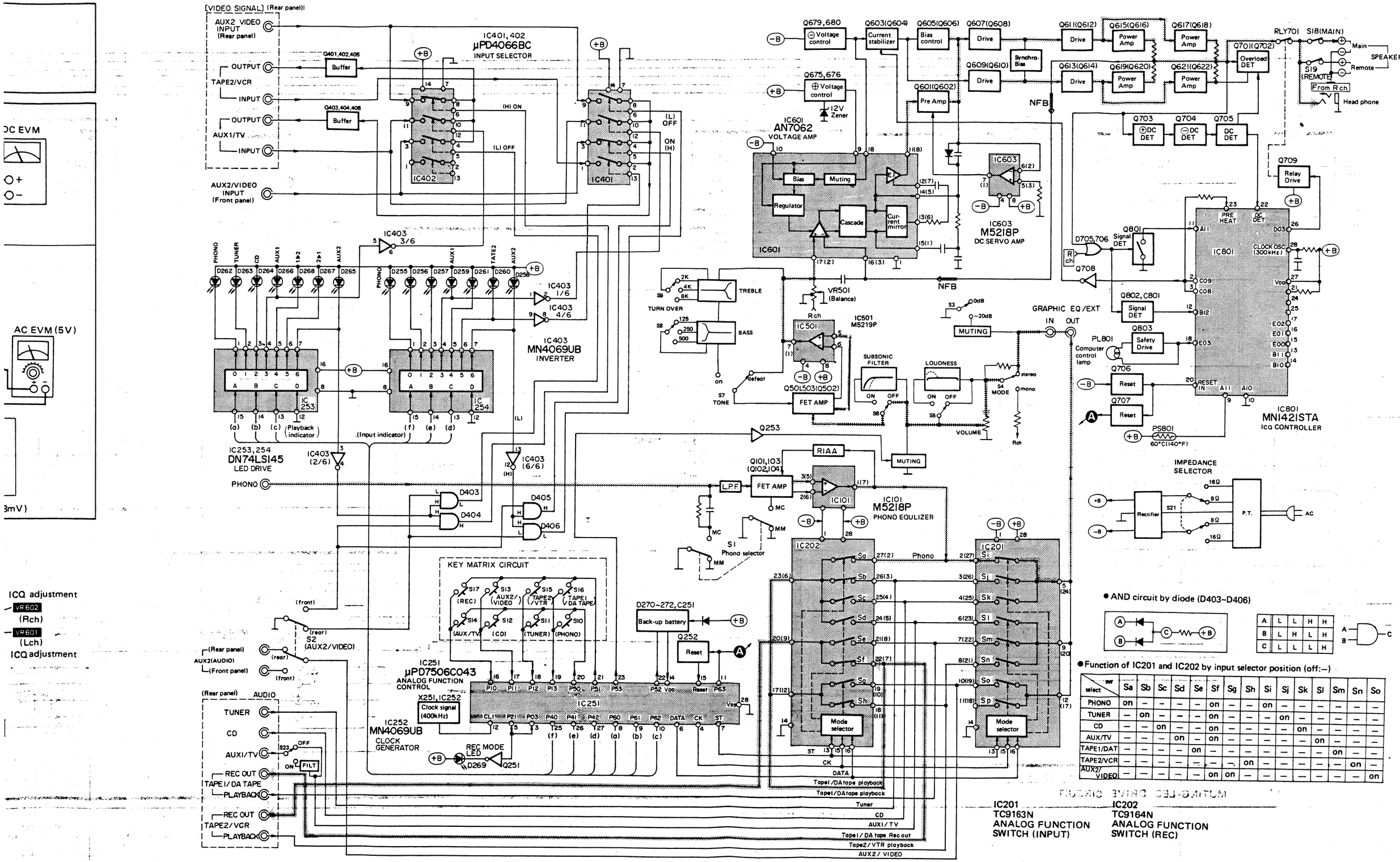

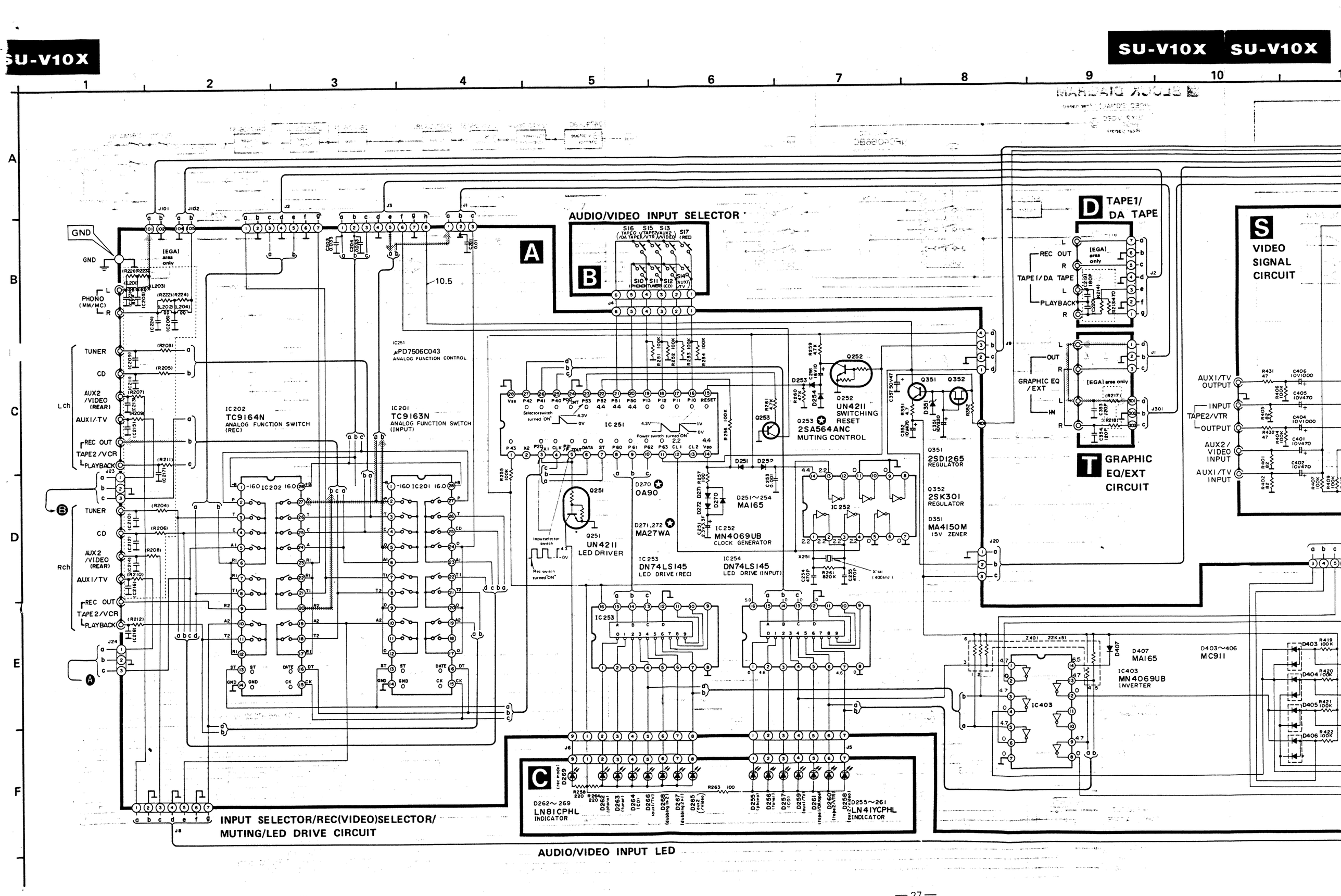

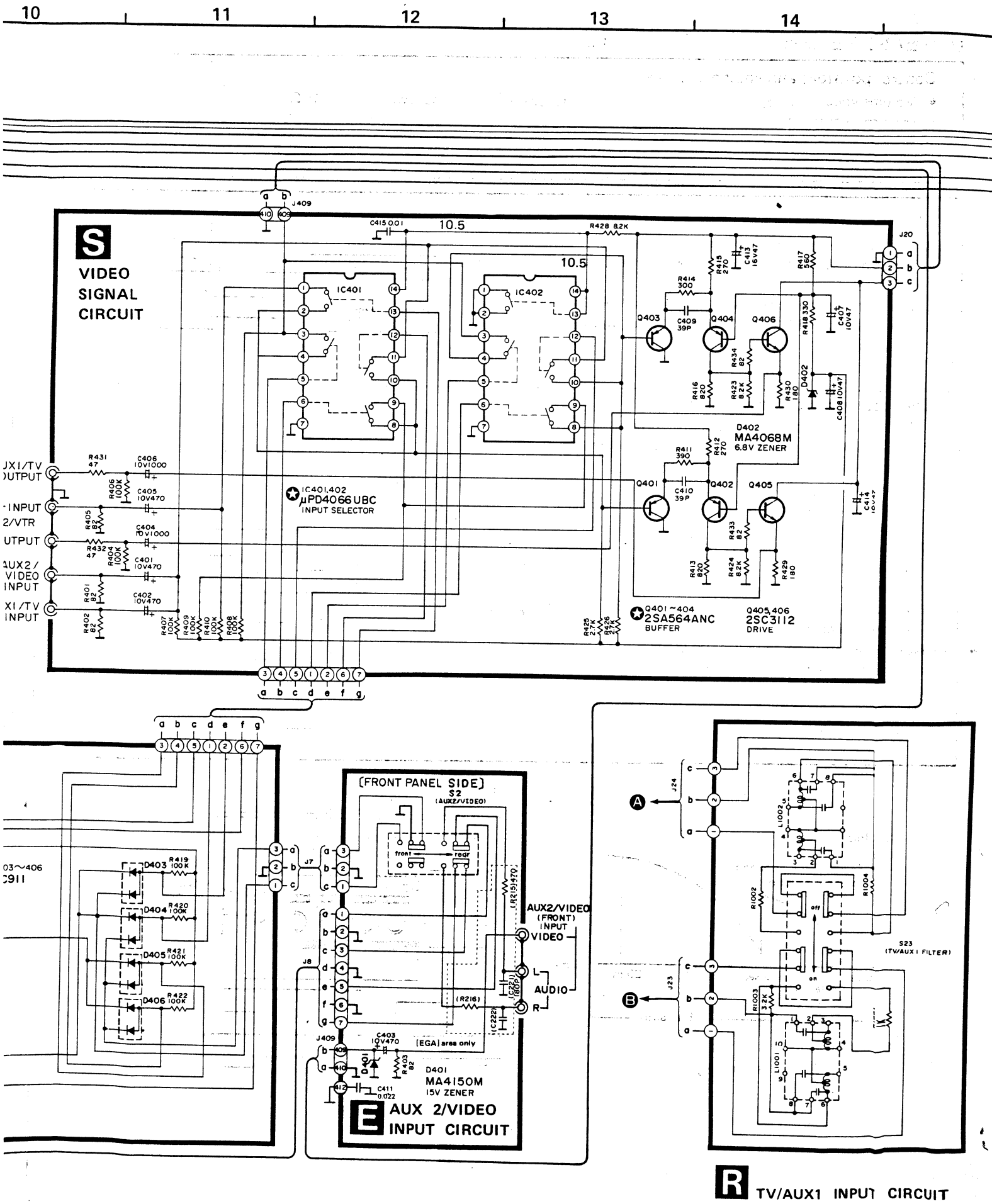

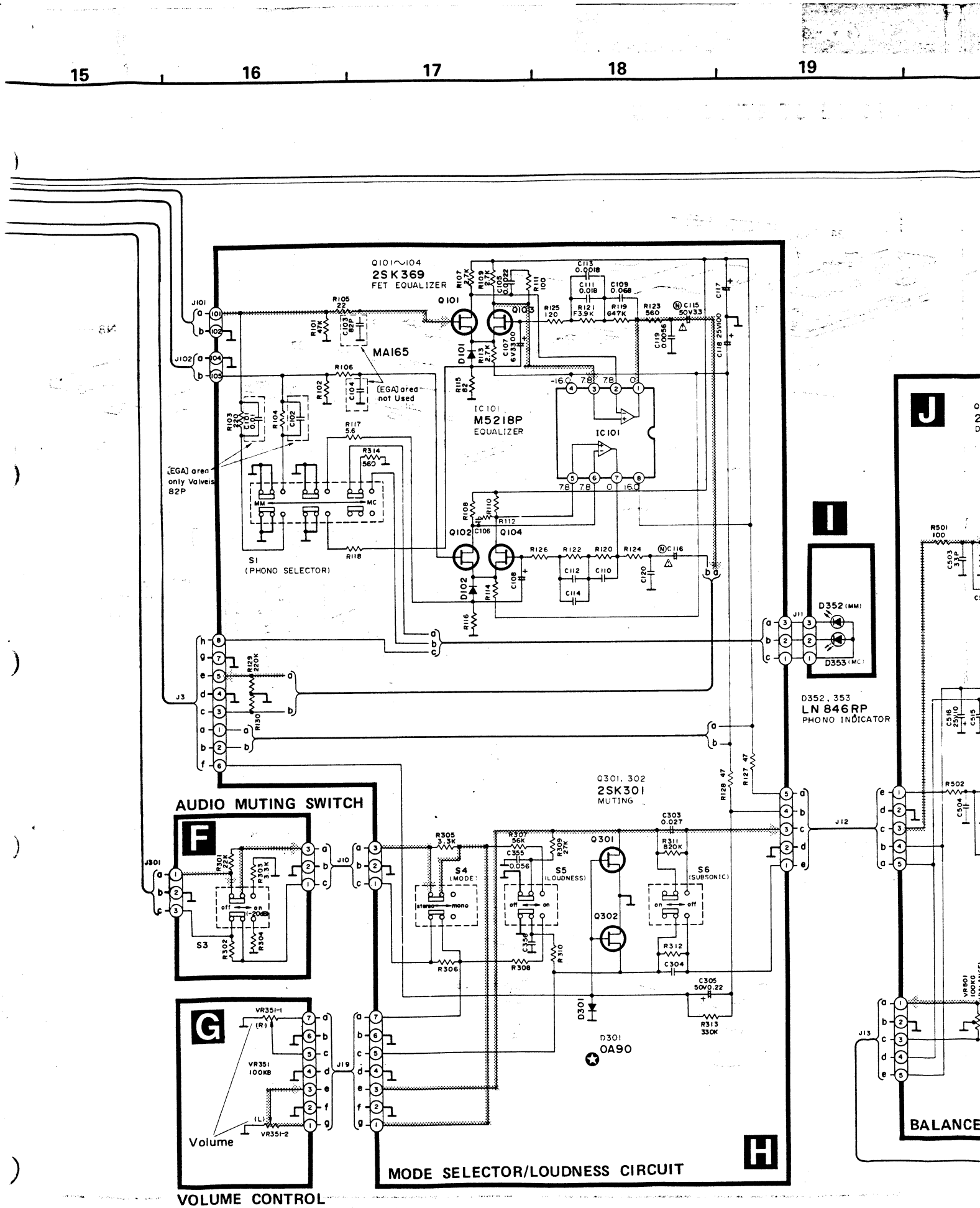

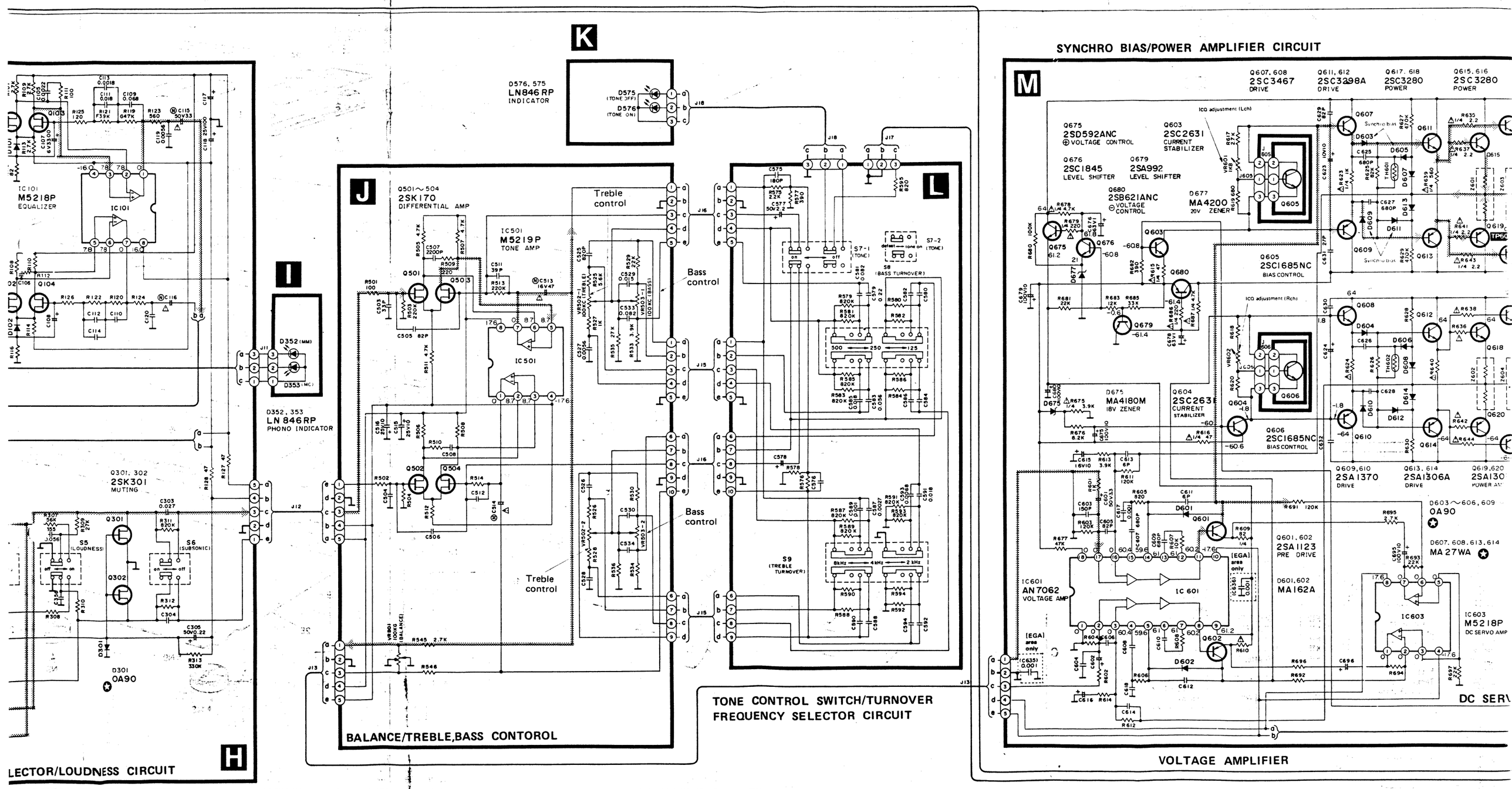

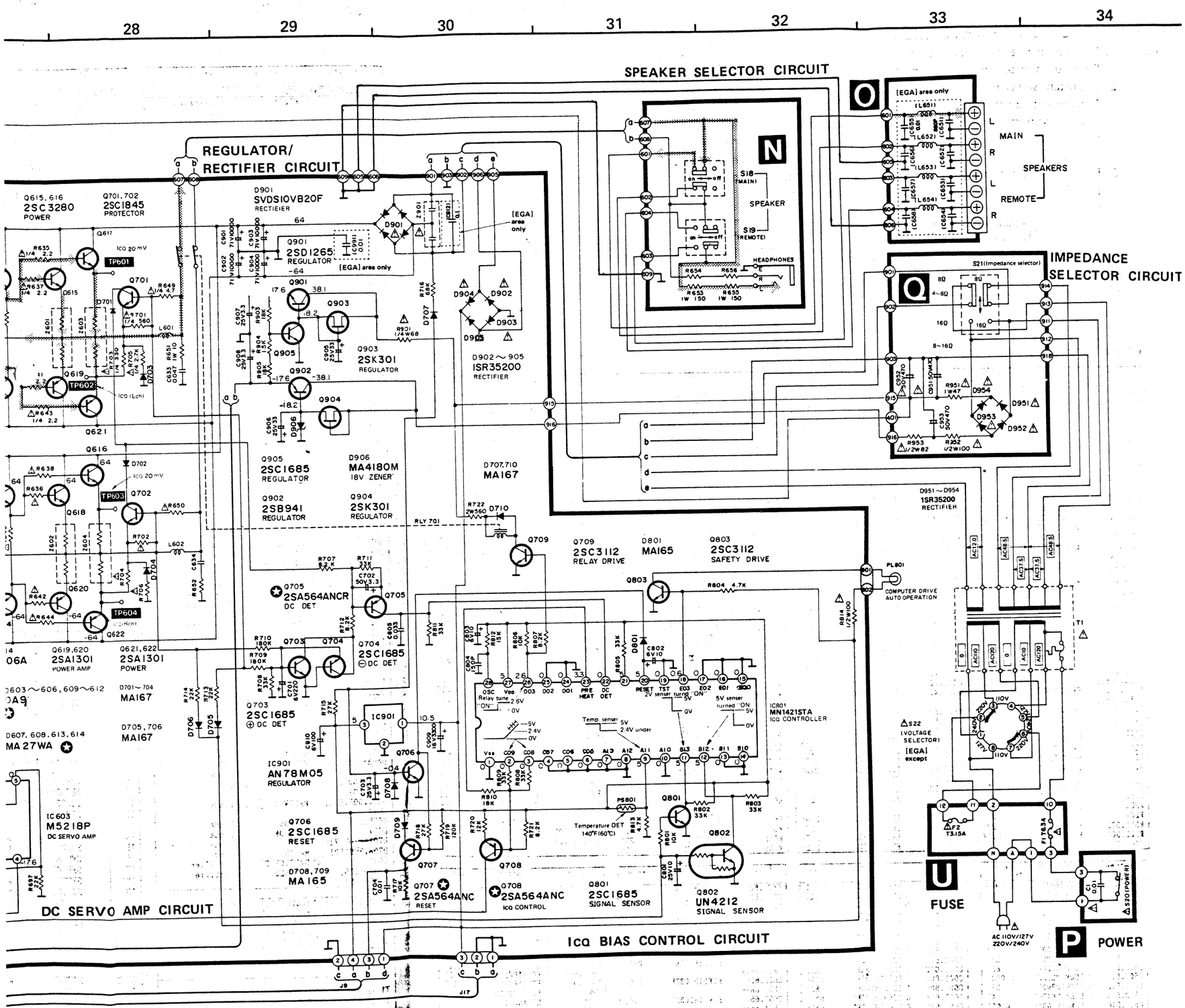

■ SCHEMATIC DIAGRAM

- The part No. of transistors, IC and diodes mentioned in the schematic diagram stand for production part No. Regarding the part No. with ✪ mark, the production part No. are different from the replacement part No. Therefore, when placing an order for replacement part, please use the part No. in the replacement parts list.

1. **S1:** Phono selection switch in "**MM**" position.
   MM ⟷ MC
2. **S2:** AUX 2 / Video selection switch in "**rear**" position.
   front ⟷ rear
3. **S3:** Muting switch in "**off**" position.
   off ⟷ on (−20dB)
4. **S4:** Mode switch in "**stereo**" position.
   stereo ⟷ mono
5. **S5:** Loudness switch in "**off**" position.
   off ⟷ on
6. **S6:** Subsonic switch in "**off**" position.
   off ⟷ −20Hz
7. **S7-1, 7-2:** Tone control switch in "**on**" position.
   tone on ⟷ defeat
8. **S8:** Bass turnover switch in "**500Hz**" position.
   500Hz ⟷ 250Hz ⟷ 125Hz
9. **S9:** Treble turnover switch in "**8kHz**" position.
   8kHz ⟷ 4kHz ⟷ 2kHz
10. **S10–S17:** Input selection switch
    S10: Phono, **S11:** tuner, **S12:** CD,
    S13: AUX 2 / Video, **S14:** AUX 1 / TV,
    S15: TAPE 2 / VCR,
    S16: TAPE 1 / DA TAPE, **S17:** REC mode
11. **S18:** Main speaker switch in "**on**" position.
    on ⟷ off
12. **S19:** Remote speaker switch in "**off**" position.
    on ⟷ off
13. **S20:** Power switch in "**on**" position.
14. **S21:** Impedance selection switch in "**4～6Ω / 8Ω**" position.
    4～6Ω ⟷ 8～16Ω
    8Ω ⟷ 16Ω
15. **S22 (Except for [EGA]):** Voltage selector switch "**220V**" position.
    127 ⟷ 110V ⟷ 220V ⟷ 240V
16. **S23:** TV/AUX 1 input filter switch in "**on(TV)**" position.
    off ⟷ on(TV)
17. Indicated voltage values are the standard values for the unit measured by the DC electronic circuit tester (high-impedance) with the chassis taken as standard. Therefore, there may exist some errors in the voltage values, depending on the internal impedance of the DC circuit tester.
18. ▒▒▒ Phono signal (Lch)
19. ——— Positive voltage lines or Nagative voltage lines.
20. Important safety notice:
    Components identified by ⚠ mark have special characteristics important for safety. When replacing any of these components use only manufacturer's specified parts.

■ CIRCUITS TO BE CHANGED AND THE AREA

[EGA] area

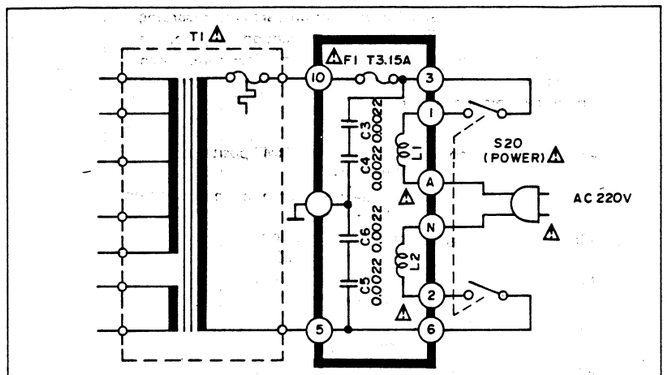

[XA] area

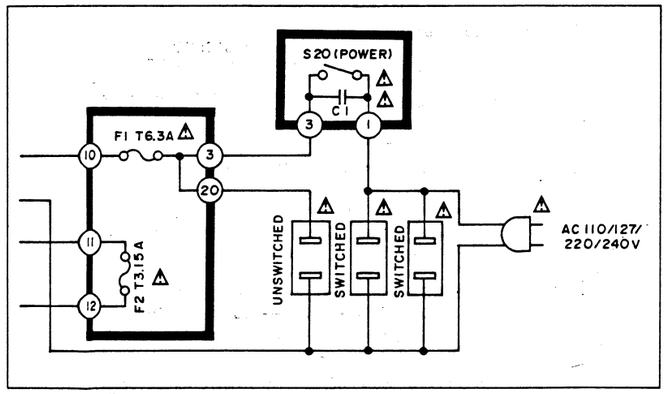

Ref.No.	Part No.	Value
C1 [EGA]except	ⓢECKDKC103PF2	0.01
C3,4 [EGA]only	ECKDKC222MF2	0.0022
C5,6 [EGA]only	ECKDKC222MF2	0.0022
C101,102 [EGA]	ⓢECCD1H820K	82P
C101,102 [other]	ⓢECKD1H103ZF	0.01
C103,104 [EGA]except	ⓢECCD1H820K	82P
C105,106	ⓢECQM1H222JZ	0.0022
C107,108	ECEA0JU332	3300
C109,110	ⓢ⚠ECQM1H683JZ	0.068
C111,112	ⓢECQM1H183JZ	0.018
C113,114	ⓢECQM1H182JZ	0.0018
C115,116	⚠ECEA1HM3R3S	3.3
C117,118	ECEA1EU101	100
C119,120	ⓢECQM1H562JZ	0.0056
C201	ⓢECKD1H103ZF	0.01
C203,204	ⓢECKD1H333ZF	0.033
C209,210 [EGA]only	ECCD1H181K	180P
C211,212 [EGA]only	ECCD1H181K	180P

Ref.No.	Part No.	Value
C213,214 [EGA]only	ECCD1H181K	180P
C215,216 [EGA]only	ECCD1H181K	180P
C217,218 [EGA]only	ECCD1H181K	180P
C219,220 [EGA]only	ECCD1H181K	180P
C221,222 [EGA]only	ECCD1H181K	180P
C223,224 [EGA]only	ECCD1H820K	82P
C251	EECW2R3A3R3E	3.3F
C253	ⓢECKD1H102MD	0.001
C254	ⓢECCD1H471KB	470P
C255	ⓢECKD1H471KB	470P
C256	ECEA1CU100	10
C303,304	ⓢECQM1H273JZ	0.027
C305	ⓢECEA50MR22R	0.22
C351,352	ECEA1CU470	47
C353,354	ⓢECCD1H121K	120P
C355,356	ⓢECQM1H563JZ	0.056
C357	ECEA1CU470	47
C401,402	ECEA1AU471	470
C403	ECEA1AU471	470
C404	ECEA1AU102	1000

■ REPLACEMENT PARTS LIST

Notes:
1. Part numbers are indicated on most mechanical parts. Please use this part number for parts orders.
2. Important safety notice: Components identified by ⚠ mark have special characteristics important for safety. When replacing any of these components use only manufacturer's specified parts.
3. Bracketed indications in Ref. No. columns specify the area. Parts without these indications can be used for all areas.
4. The "ⓢ" mark is service standard parts and may differ from production parts.
5. The unit of resistance is OHM (Ω). K = 1000Ω, M = 1000KΩ
6. The unit of capacitance is MICROFARAD (μF). P = 10^{-6} μF
7. The parenthesized numbers in the column of description stand for the quantity per set.

Resistor Type	Wattage	Tolerance
ERD : Carbon	10 : 1/8W	J : ± 5%
ERG : Metal Oxide	25 : 1/4W	G : ± 2%
ERC : Solid	2F : 1/4W	K : ±10%
	S2 : 1/4W	
	S1 : 1/2W	
	12 : 1/2W	

Capacitor Type		Voltage: ECEA Type	Voltage: Other	Tolerance
ECEA....N	: Non-polar Electrolytic	2R3 : 2.3V	05 : 50V DC	C : ±0.25pF
ECEA	: Electrolytic	DC	1H : 50V DC	J : ± 5%
ECCD	: Ceramic	OJ : 6.3V	1 : 125V DC	K : ±10%
ECKD	: Ceramic	1C : 16V	2H : 500V DC	Z : +80%, −20%
ECQM	: Polyester	1E : 25V	DKC : 125V AC	M : ±20%
ECQV	: Polyester	1V : 35V		
ECQP	: Polypropylene	1H : 50V		
EECW	: Liquid electrolyte double layer capacitor	50 : 50V		
		25 : 25V		
ECKF	: Ceramic	2A : 100V		

●RESISTORS AND CAPACITORS

Ref.No.	Part No.	Value
R101,102	ERDS2TJ473	47K
R103,104	ERDS2TJ221	220
R105,106	ERDS2TJ220	22
R107,108	EROS2TKG2701	2.7K
R109,110	EROS2TKG2701	2.7K
R111,112	ERDS2TJ101	101
R113,114	ERDS2TJ272	2.7K
R115,116	ERDS2TJ820	82
R117,118	ERDS2TJ5R6	5.6
R119,120	ERDS2TJ473	47K
R121,122	ERDS2TJ392	3.9K
R123,124	ERDS2TJ561	560
R125,126	ERDS2TJ121	120
R127,128	ERDS2TJ470	47
R129,130	ERDS2TJ224	220K
R203,204 [EGA]only	ERDS2TJ471	470
R205,206 [EGA]only	ERDS2TJ471	470
R207,208 [EGA]only	ERDS2TJ471	470
R209,210 [EGA]only	ERDS2TJ471	470
R211,212 [EGA]only	ERDS2TJ471	470
R213,214 [EGA]only	ERDS2TJ471	470
R215,216 [EGA]only	ERDS2TJ471	470
R217,218 [EGA]only	ERDS2TJ471	470
R251,252	ERDS2TJ104	100K
R253,254	ERDS2TJ104	100K
R255,256	ERDS2TJ104	100K
R257	ERDS2TJ101	100
R258	ERDS2TJ221	220
R259	ERDS2TJ472	4.7K
R260	ERDS2TJ473	47K
R261	ERDS2TJ472	4.7K
R262	ERDS2TJ824	820K
R263	ERDS2TJ101	100
R264	ERDS2TJ221	200
R301,302	ERDS2TJ223	22K
R303,304	ERDS2TJ332	3.3K
R305,306	ERDS2TJ332	3.3K

Ref.No.	Part No.	Value
R307,308	ERDS2TJ563	56K
R309,310	ERDS2TJ273	27K
R311,312	ERDS2TJ824	820K
R313	ERDS2TJ334	330K
R314	ERDS2TJ561	560
R351	ERDS2TJ4R7	4.7
R352	ERG2ANJ471	470
R401,402	ERDS2TJ820	82
R403	ERDS2TJ820	82
R404	ERDS2TJ104	100K
R405	ERDS2TJ820	82
R406,407	ERDS2TJ104	100K
R408,409	ERDS2TJ104	100K
R410	ERDS2TJ104	100K
R411	ERDS2TJ391	390
R412	ERDS2TJ271	270
R413	ERDS2TJ821	820
R414	ERDS2TJ391	390
R415	ERDS2TJ271	270
R416	ERDS2TJ821	820
R417	ERDS2TJ561	560
R418	ERDS2TJ331	330
R419,420	ERDS2TJ104	100K
R421,422	ERDS2TJ104	100K
R423,424	ERDS2TJ822	8.2K
R425,426	ⓢERD25FJ272	2.7K
R428	ERDS2TJ822	8.2K
R429,430	ERDS2TJ181	180
R431,432	ERDS2TJ470	47
R433,434	ERDS2TJ820	82
R501,502	ERDS2TJ101	100
R503,504	ERDS2TJ224	220K
R505,506	ERDS2TJ472	4.7K
R507,508	ERDS2TJ472	4.7K
R509,510	ERDS2TJ221	220
R511,512	ERDS2TJ472	4.7K
R513,514	ERDS2TJ224	220K
R525,526	ERDS2TJ562	5.6K
R527,528	ERDS2TJ102	1K
R529,530	ERDS2TJ223	22K
R533,534	ERDS2TJ392	3.9K
R535,536	ERDS2TJ273	27K
R545,546	ERDS2TJ272	2.7K
R575,576	ERDS2TJ222	2.2K

Ref.No.	Part No.	Value
R577,578	ERDS2TJ391	390
R579,580	ERDS2TJ824	820K
R581,582	ERDS2TJ824	820K
R583,584	ERDS2TJ824	820K
R585,586	ERDS2TJ824	820K
R587,588	ERDS2TJ824	820K
R589,590	ERDS2TJ824	820K
R591,592	ERDS2TJ824	820K
R593,594	ERDS2TJ824	820K
R595	ERDS2TJ561	560
R601,602	ERDS2TJ102	1K
R603,604	ERDS2TJ124	120K
R605,606	ERDS2TJ821	820
R607,608	ERDS2TJ103	10K
R609,610	ⓢ⚠ERD25FJ820	82
R611,612	EROS2TKG1203	120K
R613,614	ERDS2TJ392	3.9K
R615,616	ⓢ⚠ERD25FJ470	47
R617,618	ⓢ⚠ERDS2TJ272	2.7K
R619,620	ERDS2TJ681	680
R623,624	ⓢ⚠ERD25FJ102	1K
R625,626	ERDS2TJ823	82K
R627,628	ERDS2TJ474	470K
R629,630	ERDS2TJ474	470K
R635,636	ⓢ⚠ERD25FJ2R2	2.2
R637,638	ⓢ⚠ERD25FJ2R2	2.2
R639,640	ⓢ⚠ERD25FJ561	560
R641,642	ⓢ⚠ERD25FJ2R2	2.2
R643,644	ⓢ⚠ERD25FJ2R2	2.2
R649,650	ⓢ⚠ERD25FJ4R7	4.7
R651,652	ⓢERG1ANJ100	10
R653,654	ⓢERG1ANJ151	150
R655,656	ⓢERG1ANJ151	150
R675	ⓢ⚠ERD25FJ392	3.9K
R676	ERDS2TJ822	8.2K
R677	ERDS2TJ473	47K
R678	ⓢ⚠ERD25FJ472	4.7K
R679	ⓢ⚠ERD25FJ221	220
R680	ERDS2TJ104	100K
R681	ERDS2TJ223	22K
R682	ERDS2TJ391	390
R683	ERDS2TJ123	12K
R685	ERDS2TJ333	33K
R686	ⓢ⚠ERD25FJ221	220

Ref.No.	Part No.	Value
R687	ⓢ⚠ERD25FJ472	4.7K
R691,692	ERDS2TJ124	120K
R693,694	ERDS2TJ223	22K
R695,696	ERDS2TJ273	27K
R697	ERDS2TJ223	22K
R701,702	ⓢ⚠ERD25FJ561	560
R703,704	ⓢ⚠ERD25FJ331	330
R705,706	ⓢ⚠ERD25FJ272	2.7K
R707	ERDS2TJ822	8.2K
R708	ERDS2TJ333	33K
R709,710	ERDS2TJ184	180K
R711	ERDS2TJ333	33K
R712	ERDS2TJ822	8.2K
R713,714	ERDS2TJ223	22K
R715	ERDS2TJ273	27K
R716	ERDS2TJ683	68K
R717	ERDS2TJ103	10K
R718	ERDS2TJ273	27K
R719	ERDS2TJ124	120K
R720	ERDS2TJ123	12K
R721	ERDS2TJ822	8.2K
R722	ERG2ANJ681	680
R801	ERDS2TJ103	10K
R802,803	ERDS2TJ333	33K
R804	ERDS2TJ472	4.7K
R805	ERDS2TJ333	33K
R806	ERDS2TJ103	10K
R807	ERDS2TJ822	8.2K
R808,809	ERDS2TJ333	33K
R810	ERDS2TJ183	18K
R811	ERDS2TJ333	33K
R812	ERDS2TJ153	15K
R813	ERDS2TJ472	4.7K
R814	⚠ERD25FJ330	33
R901	ⓢERD25FJ101	100
R903	ERDS2TJ183	18K
R904	ERDS2TJ152	1.5K
R905	ERDS2TJ183	18K
R951	ERG1ANJ220	22
R952	ERDS1FJ101	100
R953	ERDS1FJ820	82
R1001,1002	ERDS2TJ102	1K
R1003,1004	ERDS2TJ332	3.3K

Ref.No.	Part No.	Value
C405	ECEA1AU471	470
C406	ECEA1AU102	1000
C407,408	ECEA1AU470	47
C409,410	ⓢECCD1H390K	39P
C411	ⓢECKD1H223ZF	0.022
C412	ECKD1H333ZF	0.033
C413,414	ECEA1CU470	47
C415	ECKD1H103ZF	0.01
C503,504	ⓢECCD1H330K	33P
C505,506	ⓢECCD1H820K	82P
C507,508	ⓢECQM1H222JZ	0.0022
C511,512	ⓢECCD1H390K	39P
C513,514	⚠ECEA1CN470S	47
C515,516	ECKD1H103ZF	0.001
C525,526	ECQP1821JZ	820P
C527,528	ⓢECQM1H562JZ	0.0056
C529,530	ⓢECQM1H153JZ	0.015
C533,534	ⓢECQM1H823JZ	0.082
C575,576	ⓢECCD1H390K	39
C577	ECEA1HU2R2	2.2

Ref.No.	Part No.	Value
C578	ⓢECEA1HU2R2	2.2
C579,580	ⓢECQM1H224JZ	0.22
C581,582	ⓢECQM1H823JZ	0.082
C583,584	ⓢECQM1H563JZ	0.056
C585,586	ⓢECQM1H183JZ	0.018
C587,588	ⓢECQM1H272JZ	0.0027
C589,590	ⓢECQM1H102JZ	0.001
C591,592	ⓢECQM1H183JZ	0.018
C593,594	ⓢECQM1H682JZ	0.0068
C601,602	ECEA1HU3R3	3.3
C603,604	ⓢECCD1H151K	150P
C605,606	ⓢECCD1H820K	82P
C607,608	ⓢECKD1H681KB	680P
C609,610	ⓢECKD1H681KB	680P
C611,612	ⓢ⚠ECCD1H060CC	6P
C613,614	ⓢ⚠ECCD1H060CC	6P
C615,616	ECEA1CU100	10
C617,618	ⓢECKD1H102MD	0.001
C623,624	ECEA2AU100	10
C625,626	ⓢECKD1H681KB	680P

Ref.No.	Part No.	Value
C627,628	ⓢECKD1H681KB	680P
C629,630	ⓢECCD2H820K	82P
C631,632	ⓢECCD2H270K	27P
C633,634	ⓢECQM1H473JZ	0.047
C635[EGA]only	ECKD1H102MD	0.01
C636[EGA]only	ECKD2H102ZEM	0.01
C651,652 [EGA]only	ECCD1H681K	680P
C653,654 [EGA]only	ECCD1H681K	680P
C655,656 [EGA]only	ECKD1H103ZF	0.01
C657,658 [EGA]only	ECKD1H103ZF	0.01
C675	ECEA1EU3R3	3.3
C676	ECEA1JU010	1
C678	ECEA1JU010	1
C679,680	ECEA1JU010	10
C695,696	ECEA2AU100	10
C701	ECEA0JU221	220

Ref.No.	Part No.	Value
C702	ECEA1HU3R3	3.3
C703	ECEA1EU3R3	3.3
C704	ⓢECKD1H103ZF	0.01
C801	ECEA1VU100	10
C802,803	ECEA1CU100	10
C804	ⓢECCD1H151K	150P
C805	ⓢECKD1H333ZF	0.033
C901,902	⚠ECET71R103Y	10000
C903,904	⚠ECET71R103Y	10000
C905,906	ECEA1EU330	33
C907,908	ECEA1EU3R3	3.3
C909	ECEA1CU332	3300
C910	ECEA0JU101	100
C912[EGA]only	ECQE2104MS	0.1
C951,952	ECEA1HU471	470
C953	ECEA1HU471	470
C991 [EGA]only	ⓢECKD1H103ZF	0.01

Ref.No.	Part No.	Description
INTEGRATED CIRCUITS		
IC101	M5218P	Integrated Circuit
IC201	TC9163N	Integrated Circuit
IC202	TC9164N	Integrated Circuit
IC251	UPD7506C043	Integrated Circuit
IC252,403	MN4069UB	Integrated Circuit
IC253,254	DN74LS145	Integrated Circuit
IC401,402	UPD4066BC	Integrated Circuit
IC501	M5219P	Integrated Circuit
IC601	AN7062	Integrated Circuit
IC603	M5218P	Integrated Circuit
IC801	MN1421STA	Integrated Circuit
IC901	AN78M05	Integrated Circuit
TRANSISTORS		
Q101～104	2SK369-GR	Transistor
Q251,252	UN4211	Transistor
Q253	ⓢ2SA722-S	Transistor
Q301,302,352	2SK301-S	Transistor
Q351	2SD1265-O	Transistor
Q401～404	ⓢ2SA722-S	Transistor
Q405,406	2SC3112	Transistor
Q501～504	2SK170-GR	Transistor
Q601,602	2SA1123-R	Transistor
Q603,604	2SC2631-R	Transistor
Q605,606	2SC1685-QNC	Transistor
Q607,608	2SC3467-D	Transistor
Q609,610	2SA1370-D	Transistor
Q611,612	2SC3298A-Y	Transistor
Q613,614	2SA1306A-Y	Transistor
Q615～618	2SC3280-R	Transistor
Q619～622	2SA1301-R	Transistor
Q675	2SD592ANC-Q	Transistor
Q676,701,702	2SC1845-E	Transistor
Q679	2SA992E	Transistor
Q680	2SB621	Transistor
Q703,704,706, 801,905	2SC1685-QNC	Transistor
Q705,707,708	ⓢ2SA722-S	Transistor
Q709,803	2SC3112	Transistor
Q802	UN4212	Transistor
Q901	2SD1265-O	Transistor
Q902	2SB941-Q	Transistor
Q903,904	2SK301-S	Transistor
DIODES		
D101,102, 251～254,407, 708,709,801	MA165	Diode
D255～261	LN41YCPHL	LED
D262～269	LN81CPHL	LED
D270,301	ⓢ20A90	Diode
D271,272	MA27W-A	Diode
D351,401	MA4150M	Diode
D352,353,575, 576	LM846RP	LED
D402	MA4068M	Diode
D403～406	MC911	LED
D601,602	ⓢMA162A	Diode
D603～606, 609～612	ⓢ20A90	LED
D607,608,613, 614	MA27W-A	Diode
D675,906	MA4180M	Diode
D677	MA4200M	Diode
D701～707,710	MA167	Diode
D708,709,801	MA165	Diode
D901	⚠SVDS10VB20F	Rictifier
D902～905, 951～954	⚠1SR35200	Rictifier
COILS		
L1,2[EGA]only	ELQ050D15	Choke Coil
L201～204 [EGA]only	SLQW471-1P3	Choke Coil
L601,602	SLQY18G-10	Choke Coil
L651～654 [EGA]only	SLQY07G-30	Choke Coil
L1001,1002	SLM1Z37-P	Choke Coil
TRASFORMER		
T1 [EGA]	⚠SLT5R63	Power Source
T1 [other]	⚠SLT5R62	Power Source

Ref.No.	Part No.
CRYSTAL	
X251	SVFCSB4
VARIABLE RESISTORS	
VR351	EWJKMA0
VR501	EWHFKA0
VR502,503	EWCXEA0
VR601,602	EVMK6A0
COMPONENT COMBINATIONS	
Z401	EXBP852
Z601～604	ERF3GB1
Z901 [EGA] except	⚠ SXRFS20
THERMISTERS	
TH601,602	ERTD2ZH
RELAY	
RLY701	⚠SSY124
THEREMAL DETECTOR	
PS801	SRPBG47
LAMP	
PL801	XAMS12S
FUSE	
F1 [EK]	⚠XBA2C63
F1 [EGA]	⚠XBA2C31
F1 [other]	⚠XBA2C63
F2 [EK]	⚠XBA2C31
F2 [EGA] except	⚠XBA2C31
SWITCHES	
S1,4～6	SSH486
S2	SSH1183
S3	SSH1184
S7	SSH2090
S8,9	SSR225
S10～17	SSG13
S18,19	SSH2089
S20 [EGA]	⚠ESB9022
S20 [other]	⚠SSH1109
S21	⚠SSH1158
S22[EGA] except	⚠ESE3726
S23	RSS42A

Ref.No.	Part No.
CABINET and CHASSIS PART	
1	SGE1729
2	SGWUV10X-KM
3	SGWUV10X-KM1
4	SDU270
5	SBCUV10X-KM
6	SUS782
7	SBN1192
8	SGXUV10X-KM
9	SGXUV10X-KM1
10	SBN1193
11	SBC439-2
12	SJJ63B
13	SBC666
14	SMCUV10X-KM
15	SDU268
16	SMP388
17	SMP387-1
18	SBC719-1
19	SJF3061-2N
20	SBC708
21	SHR9756
22	SBN1194
23 [EK]	SKCUV10X-KK
23 [other]	SKCUV10X-KM
24 [EGA]	SJT347
24 [other]	SJT347
25	SKU8990-5

rt No.	Description
P	Integrated Circuit
3N	Integrated Circuit
N	Integrated Circuit
6C043	Integrated Circuit
UB	Integrated Circuit
S145	Integrated Circuit
66BC	Integrated Circuit
P	Integrated Circuit
2	Integrated Circuit
P	Integrated Circuit
STA	Integrated Circuit
5	Integrated Circuit
-GR	Transistor
	Transistor
-S	Transistor
-S	Transistor
	Transistor
	Transistor
2	Transistor
-GR	Transistor
-R	Transistor
-R	Transistor
-QNC	Transistor
-D	Transistor
0-D	Transistor
8A-Y	Transistor
6A-Y	Transistor
0-R	Transistor
1-R	Transistor
ANC-Q	Transistor
5-E	Transistor
E	Transistor
	Transistor
5-QNC	Transistor
-S	Transistor
2	Transistor
	Transistor
5-0	Transistor
-Q	Transistor
-S	Transistor
	Diode
L	LED
	LED
	Diode
	Diode
	Diode
	LED
	Diode
	LED
	Diode
	LED
	Diode
M	Diode
M	Diode
	Diode
	Diode
VB20F	Rictifier
00	Rictifier
015	Choke Coil
1-1P3	Choke Coil
0-10	Choke Coil
0-30	Choke Coil
7-P	Choke Coil
	Power Source
	Power Source

Ref.No.	Part No.	Description
CRYSTAL		
X251	SVFCSB400P-M	Crystal
VARIABLE RESISTORS		
VR351	EWJKMA054B15	Volume,100kΩ (B)
VR501	EWHFKA002G15	Balance, 100kΩ (G)
VR502,503	EWCXEA000C15	Tone,100kΩ (C)
VR601,602	EVNK6AA00B13	ICQ Adj,1kΩ (B)
COMPONENT COMBINATIONS		
Z401	EXBP85223K	22kΩ
Z601～604	ERF3GBKR22N	0.22Ω (×2)
Z901 [EGA] except	⚠ SXRFS203ZSW	0.01μF(×2)
THERMISTERS		
TH601,602	ERTD2ZHL103S	Thermister,10kΩ
RELAY		
RLY701	⚠SSY124	Speaker
THEREMAL DETECTOR		
PS801	SRPBG47101	Posistor
LAMP		
PL801	XAMS12S500	Safety Ind.
FUSE		
F1 [EK]	⚠XBA2C63TB0	250V,T 6.3A
F1 [EGA]	⚠XBA2C31TR0	250V,T 3.15A
F1 [other]	⚠XBA2C63TR0	250V,T 6.3A
F2 [EK] except	⚠XBA2C31TB0	250V,T 3.15A
F2 [EGA] except	⚠XBA2C31TR0	250V,T 3.15A
SWITCHES		
S1,4～6	SSH486	Phono Selector, Mode,Loudness, Filter
S2	SSH1183	Aux2
S3	SSH1184	Muting
S7	SSH2090	Tone Control
S8,9	SSR225	Turnover Frequency
S10～17	SSG13	Input Selector
S18,19	SSH2089	Speaker Selector
S20 [EGA]	⚠ESB90227S	Power Sourse
S20 [other]	⚠SSH1109	Power Sourse
S21	⚠SSH1158	Impedance Selector
S22[EGA] except	⚠ESE37262	Voltage seleter
S23	RSS42A	Filter

Ref.No.	Part No.	Description	
CABINET and CHASSIS PARTS			
1	SGE1729	Terminal Cover	(1)
2	SGWUV10X-KM	Front Panel Ass'y	(1)
3	SGWUV10X-KM1	Indication Plate	(1)
4	SDU270	Filter	(1)
5	SBCUV10X-KM	Button,Input Selector	(1)
6	SUS782	Spring	(1)
7	SBN1192	Knob,Volume	(1)
8	SGXUV10X-KN	Sub panel Ass'y	(1)
9	SGXUV10X-KN1	Sub panel Ass'y	(1)
10	SBN1193	Knob,Balance	(3)
11	SBC439-2	Button,Speaker	(2)
12	SJJ63B	Headphone Jack	(1)
13	SBC666	Button, Power Source	(1)
14	SMCUV10X-KM	Shield Cover	(1)
15	SDU268	Filter,Lamp	(1)
16	SMP388	Lamp Case	(1)
17	SMP387-1	LED Case	(1)
18	SBC719-1	Button	(7)
19	SJF3061-2N	Terminal Board	(1)
20	SBC708	Button,Muting	(1)
21	SHR9756	Spacer	(1)
22	SBN1194	Knob	(2)
23 [EK]	SKCUV10X-KK	Cabinet	(1)
23 [other]	SKCUV10X-KM	Cabinet	(1)
24 [EGA]	SJT347	Fuse Holder	(2)
24 [other]	SJT347	Fuse Holder	(4)
25	SKU8990-5	Bottom Board	(1)

Ref.No.	Part No.	Description	
CABINET and CHASSIS PARTS			
26	SKL295	Foot	(4)
27	SHR9755	Holder	(1)
28	SUWUV10X-KM	Bracket	(1)
29	SUW2910-1	Bracket	(1)
30	SML107-12	Bracket, Power Transformer	(1)
31	SHG6355	Rubber, Power Transformer	(2)
32	SUW2909	Bracket	(1)
33	SHG1635	Rubber	(2)
34	SMN1953	Bracket	(1)
35	SUW2915	Bracket	(1)
36 [EK]	SHR129	Bushing,AC Cord	(1)
36 [other]	SHR127	Bushing,AC Cord	(1)
37 [EW,XA]	⚠SJA111	AC Cord	(1)
37 [EK]	⚠QFC1205M	AC Cord	(1)
37 [XL]	⚠RJA79ZA	AC Cord	(1)
37 [other]	⚠SJA97	AC Cord	(1)
38 [XA] only	⚠SJS601-3	AC Outlet	(1)
39 [D]	SGP6390-7A	Rear Panel	(1)
39 [EGA]	SGP6390-8A	Rear Panel	(1)
39 [XA]	SGP6390-9A	Rear Panel	(1)
39 [EK]	SGPUV10X-KK	Rear Panel	(1)
39 [other]	SGPUV10X-KF	Rear Panel	(1)
40	SJF4817	Terminal Board, Speaker	(1)
41	SJF3059N	Terminal Board	(1)
42	SJF3057N	Terminal Board	(2)
43	SJS104	Socket	(5)
44	SJP9205-2	Pin	(2)
45	SBC165	Button	(1)
46	SHR9766	Holder	(1)
47	SHR9767	Holder	(1)
48	SUW2951	Bracket	(1)
49	SHR401-1	Look Pin	(1)
50	SMC1206	Shield Plate	(1)
51	SUW2828	Bracket	(1)
52	SUW2952	Bracket	(1)
53	SHR401-1	Look Pin	(4)
SCREWS,NUT and WASHERS			
N1	XTB3+8JFZ	Tapping,⊕3×8	(7)
N2	XTB3+8GFZ	Tapping,⊕3×8	(6)
N3	SNE4021	Nut	(4)
N4	ⓢXSN3+6BVS	⊕3×6	(12)
N5	ⓢXWA3BFZ	Washer,φ3	(12)
N6	XTBS3+8JFZ1	Tapping with Detent,⊕3×8	(15)
N7	SNE2095-5	Cabinet	(6)
N8	XTW3+8T	Tapping with Washer,⊕3×8	(10)
N9	XTBS3+8BFR1	Tapping with Detent,⊕3×8	(4)
N10	XTW3+8TFR	Tapping with Washer,⊕3×8	(4)
N11	XTW3+8TFZ	Tapping with Washer,⊕3×8	(2)
N12	SNE2117-1	Transistor	(8)
N13	XTB4+8F	Tapping,⊕4×8	(4)
N14	ⓢXSN3+6BVS	Tapping,⊕3×6	(4)
N15	ⓢXWA3BFZ	Washer,φ3	(4)
N16	SHW40L150	Washer	(1)
N17 [EGA]	XTBS3+8JFZ1	Tapping with Detent,⊕3×8	(1)
N17 [other]	XTW3+8T	Tapping with Washer,⊕3×8	(1)

■ EXPLODED VIEW

Ref.No.	Part No.	Description	
ACCESSORIES			
A1 [XA]	SQF12429	Instruction Book	(1)
A1 [EGA]	SQF12430	Instruction Book	(1)
A1 [other]	SQF12428	Instruction Book	(1)
A2	SKL281-1	Foot	(2)
A3	SHW39K50	Washer	(2)
A4	XTB3+14J	Tapping Screw, ⊕3×14	(2)
A6 [XA] only	⚠SJP5213-1	Plug	(1)
A7 [XA] only	⚠SJP5215	Plug	(1)
PACKING PARTS			
P1 [EW,XA]	SPG5334	Carton Box	(1)
P1 [EF]	SPG5337	Carton Box	(1)
P1 [EK]	SPG5338	Carton Box	(1)
P1 [other]	SPG5336	Carton Box	(1)
P2 [EW,EK, XA]	SPS4553-1	Pad,Left	(1)
P2 [other]	SPS4553-3	Pad,Left	(1)
P3 [EW,EK, XA]	SPS4554-1	Pad,Right	(1)
P3 [other]	SPS4554-3	Pad,Right	(1)
P4	SPS4488	Pad,Upper	(1)
P5	SPP730	Polyethylene Bag	(1)

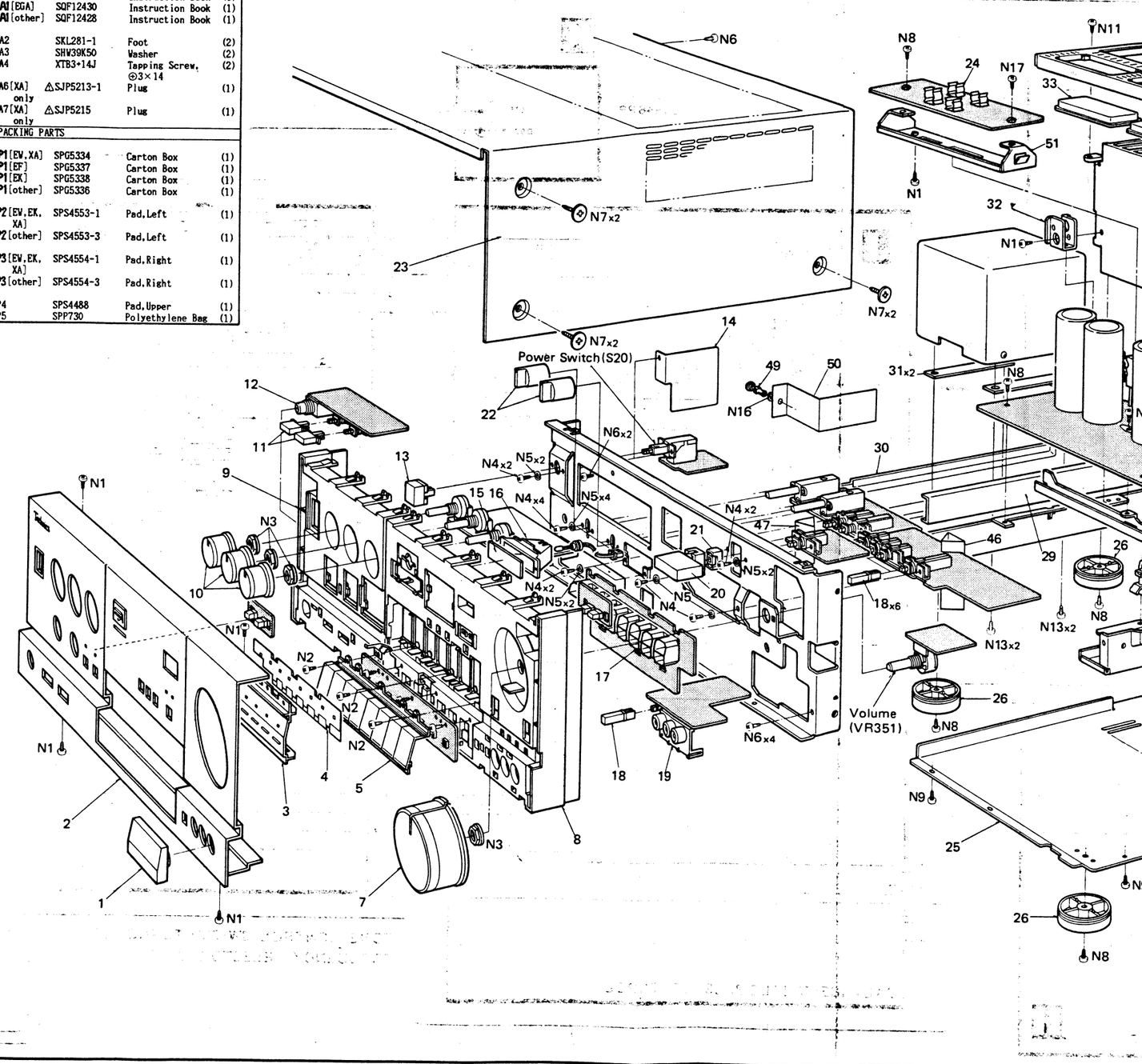

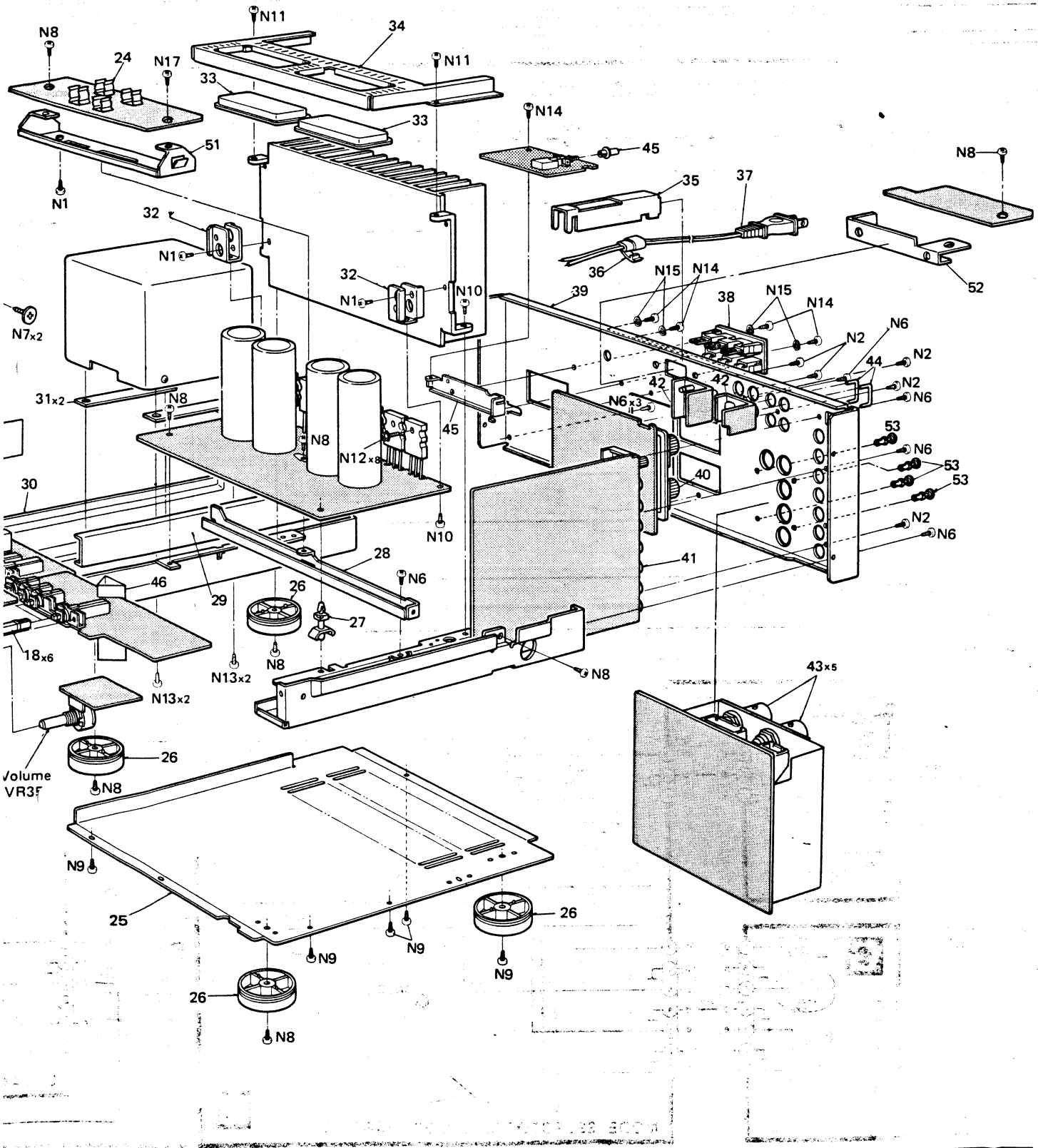

24 32 51 33 32 34 33 39 36 45 35 38 37 52

18 30 31 46 29 26 27 28 46 42 41 40 43 44 53

25 26 26 26