ORDER NO. AD9010314C2

Service Manual

Professional Digital Audio Tape Deck

SV-3700

Color

(H)...Gray Type

Area

Country Code	Area	Color
(EB)	Great Britain.	(H)
(EG)	F.R. Germany & Italy.	

SPECIFICATIONS

Signaling Format

Tape recording system:	Rotary head type DAT
Sampling frequencies:	
For recording:	48 kHz/44.1 kHz (analog/digital input) 32 kHz (digital input only)
For playback:	48 kHz/44.1 kHz/32 kHz (selected automatically)
No. of quantizing bits:	16-bit linear
No. of channels:	2 (stereo)

Audio Parameters (Recording and Playback System)

Frequency response:	
For 48 kHz:	10 Hz~22 kHz (±0.5 dB)
For 44.1 kHz:	10 Hz~20 kHz (±0.5 dB)
Signal to noise ratio: (dynamic range)	Greater than 92 dB. DIN audio weighted (22.4 Hz to 22.4 kHz bandpass)
Total harmonic distortion:	Less than 0.05% (1 kHz, −4 dBu) Less than 0.007% (1 kHz, −22 dBu)
Wow and flutter:	Unmeasurable

General

Power supply:	110 V/127 V/220 V/240 V AC, 50/60 Hz
Power consumption:	35 W
External dimensions: (W×H×D)	43×12.2×31.5 cm (16⅞"×4¾"×12⅜")
Weight:	6.14 kg (13½ pounds)

Input/Output Jacks

Analog	
Input jacks:	XLR-3 type
Nominal input level/ Input impedance:	−4 dBu (−18 dB rec level)/ 10 kΩ balanced
Output jacks:	XLR-3 type
Nominal output level/ Output impedance:	−4 dBu/−10 dBu (switch selectable)/ 75Ω balanced
Phones output:	Max. 30 mW/32Ω (matching impedance 8~600Ω)
Digital (AES/EBU type)	
Input jacks:	XLR-3 type/100Ω balanced
Output jacks:	XLR-3 type/20Ω balanced
Digital (IEC TYPE II)	
Input jack:	RCA phono type (coaxial)/75Ω
Output jack:	RCA phono type (coaxial)/75Ω

Mechanism

Heads:	Amorphous ferrite composite type
Cylinder diameter:	30 mm
Cylinder rotation speed:	2,000 r.p.m. (recording and playback)
Tape speed:	8.15 mm/sec., 12.225 mm/sec. (selected automatically)
Search speed:	Up to 250 times normal playback speed
FF/Rewind speed:	Up to 400 times nomal playback speed
FF/Rewind time:	Approx. 27 sec. (2 hours DAT tape)

Note:
Specifications are subject to change without notice.
Weight and dimensions are approximate.

Panasonic

■ CONTENTS

■ INSTALLATION

Installation of rack mount kit

1. Assemble the rack ears and panel, and tighten with included screws.

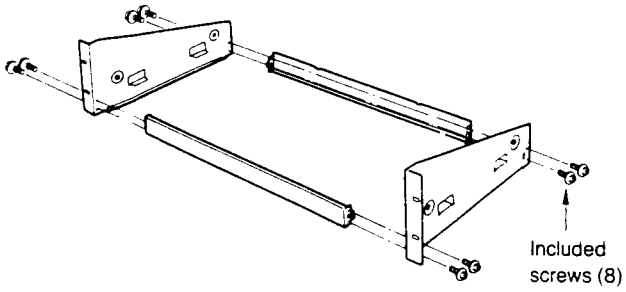

2. Remove the 4 screws on side enclosure, and attach the unit to the rack mount.

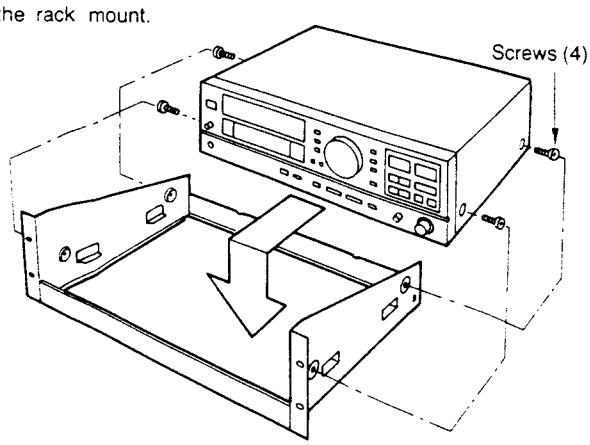

Notes on placement

■ **This unit is a precision instrument. Be sure to place it on a flat surface.**

■ **Avoid places such as the following:**

- Near any equipment or device that generates strong magnetism.
- On any heat-generating equipment or device, or in any place where the temperature is high (35°C or higher).
- Extremely cold places (5°C or below).
- Near an AM/FM tuner or TV.
  (It may produce noise in the broadcast, or disturb the TV picture.)
- For long periods of time in direct sunlight.
- In dusty or smoky locations.
- In locations prone to vibrations.
- In locations where the rear panel is less than 10 cm (about 4") away from the wall or back of an audio rack.

■ **Do not place heavy objects, other than system components, on top of the unit.**

■ **When carrying or storing the unit, handle it with care so it is not subjected to any strong bumps.**

■ **To avoid problems due to vibration.**

- Do not place a book or similar object under this unit.
- Do not route the connection cables (of this or other units) across the operation panel, across the top, or under the unit.

■ LOCATION OF CONTROLS

The functions indicated by the black numbers (with white background, ④ etc.) can also be activated using the remote control transmitter.

Front panel

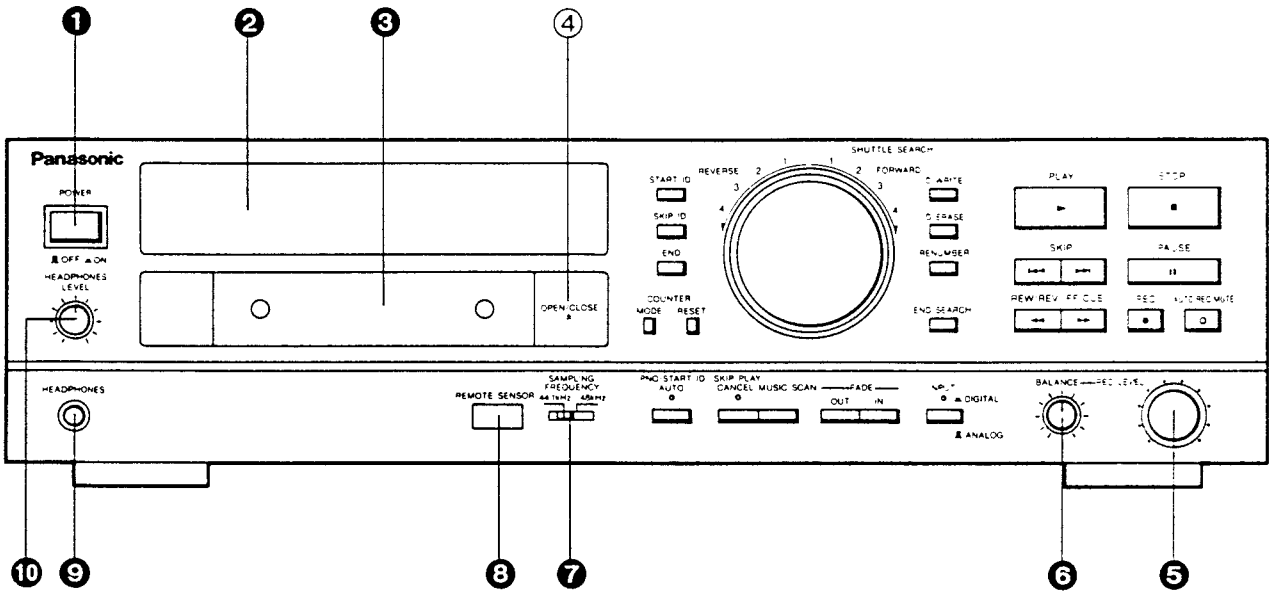

❶ **POWER switch (POWER)**

❷ **Display panel**
See page 10.

❸ **Cassette holder**

④ **OPEN/CLOSE button (▲ OPEN/CLOSE)**

❺ **REC LEVEL control (REC LEVEL)**
Use to adjust the recording level of left and right channels.

❻ **REC BALANCE control (BALANCE)**
Use to adjust recording balance between left and right channels.

❼ **SAMPLING FREQUENCY selector**
Select the sampling frequency when making analog recordings. (44.1 kHz or 48 kHz)

❽ **Remote control signal sensor (REMOTE SENSOR)**

❾ **Phones jack (HEADPHONES)**
A 6 mm connector for standard stereo headphones.

❿ **Phone level control (HEADPHONES LEVEL)**
Use this control to adjust the output level to the headphones.

CONNECTIONS

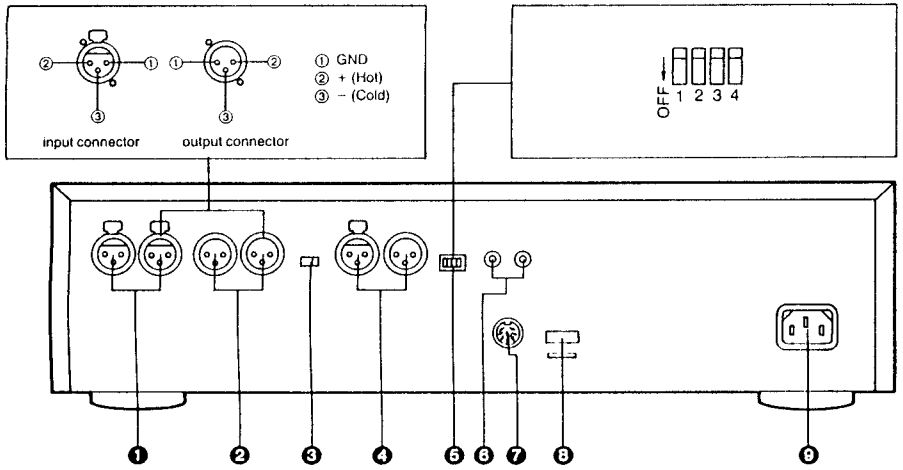

❶ **ANALOG IN terminals**
These are balanced analog audio XLR input connectors.

❷ **ANALOG OUT terminals**
These are balanced analog audio XLR output connectors.

❸ **OUTPUT LEVEL selector (+4 dBu/−10 dBu)**
Select the nominal output level (nominal level for a peak level meter display of −18 dB).

❹ **AES/EBU terminals (IN/OUT)**
These terminals are for input or output of signals for the professional digital interface.

❺ **DIP switch settings**
These are used for the following settings:
- Digital Input Selection (IEC TYPE II or AES/EBU)
- SCMS ID 6 Status for AES/EBU Input
- Blank Skip Mode in Program Search

For further details, see page 35.

❻ **IEC TYPE II (IEC 958) jacks (IN/OUT)**
These terminals are for input or output of digital signals from/to a consumer unit.

❼ **REMOTE CONTROL jack (PARALLEL)** ※

❽ **Hour meter (5000H)**
Shows the number of hours of head usage in recording and playback.

❾ **AC IN jack**
Connect to the grounded AC outlet with the included AC power supply cord.

※ Parallel Input Terminals

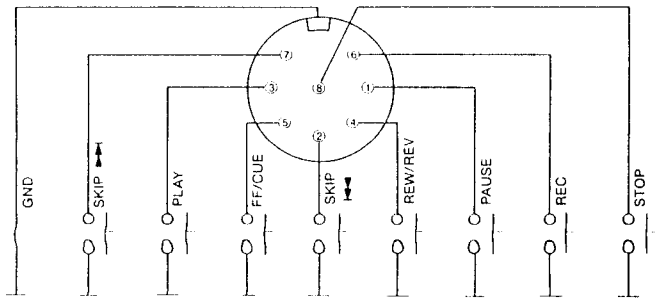

DIP SWITCH SETTINGS

DIP Switch on the Rear Panel

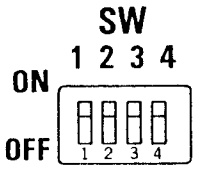

Following settings can be made by using DIP switches.

	Switch Setting	Function (UP=1; DOWN=0)
1	Digital Input Selection	1=IEC 958 0=AES/EBU
2 3	SCMS ID6 Status for AES/EBU Input	*SW2 SW3 ID Meaning* 0 — 00 Copy Free 1 0 10 No further copies 1 1 11 One copy allowed
4	Blank Skip Mode in Program Search	1=ON 0=OFF SV-3700 will advance to the next selection on Program Play mode, if approximately two seconds of silence are encountered.

Note:
IEC 958 is shown as IEC TYPE II on the rear panel of SV-3700.

SCMS Copy Protection

The Serial Copy Management System (SCMS) is designed to control digital-to-digital DAT copying that a consumer can perform on various digital audio material, including Compact Discs, pre-recorded DAT tapes, and other material via IEC 958 "consumer use" digital audio interfaces (also commonly referred to as "S/P DIF" and EIAJ CP-340). SCMS does not affect the ability to make copies using a DAT recorder's analog inputs and outputs, nor does it apply to digital-to-digital copies made via the AES/EBU professional digital audio interface.

Only one serial (or generational) digital-to-digital copy can be made from a copyright protected source, such as a commercial CD or pre-recorded DAT. Serial Copy Management System labels are generated onto tape each time an SCMS-equipped consumer DAT machine records an audio signal to tape, no matter whether the source is from the analog or digital inputs.

Technically, the SCMS labels for DAT are encoded into the SubCode sections of the main digital data area, specifically "ID6". The SV-3700's rear-panel DIP switches allow the user to preset the SCMS status bits of ID6 onto the DAT recording. For legal reasons, the ID6 bits are only modified if the source input is the AES/EBU Digital I/O; during digital copying via the IEC "consumer use" input, the SV-3700 simply copies across the current status of SCMS codes indicated by the Channel Status. To prevent a master DAT tape being copied on a consumer deck, for example, you might select switch setting for "ID6=10", which would prevent any further digital copying of this copyrighted cassette via a consumer DAT. Alternatively, you might select "ID6=00", so that any number of digital copies could be made on a consumer deck. Selection of "ID6=11" will designate a final copyright protected pre-recorded product, which would behave the same way on consumer SCMS-equipped DAT decks as a normal commercial release.

DISPLAYING SCMS STATUS AND ERROR RATES

The SCMS status of a DAT recording can be displayed on the SV-3700 by simultaneously pressing the front-panel COUNTER MODE, RESET and PAUSE buttons. Now shown within the normal Time Display window will be the type of digital interface that has been selected via the rear-panel DIP switch—AES/EBU or IEC 958 "consumer use"—while the PNO display now shows the ID6 value of the recording: 00, 10 or 11. If the COUNTER MODE button is pressed for a second time, the SV-3700 will display ERROR RATES; the mode can be cancelled by hitting the RESET button.

Each time the COUNTER MODE button is pressed, the display changes as follows:

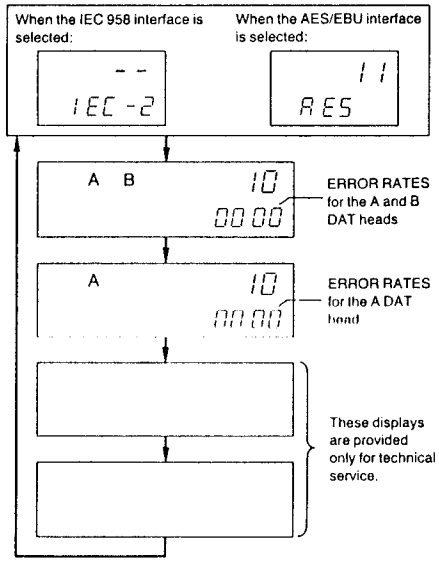

Front panel

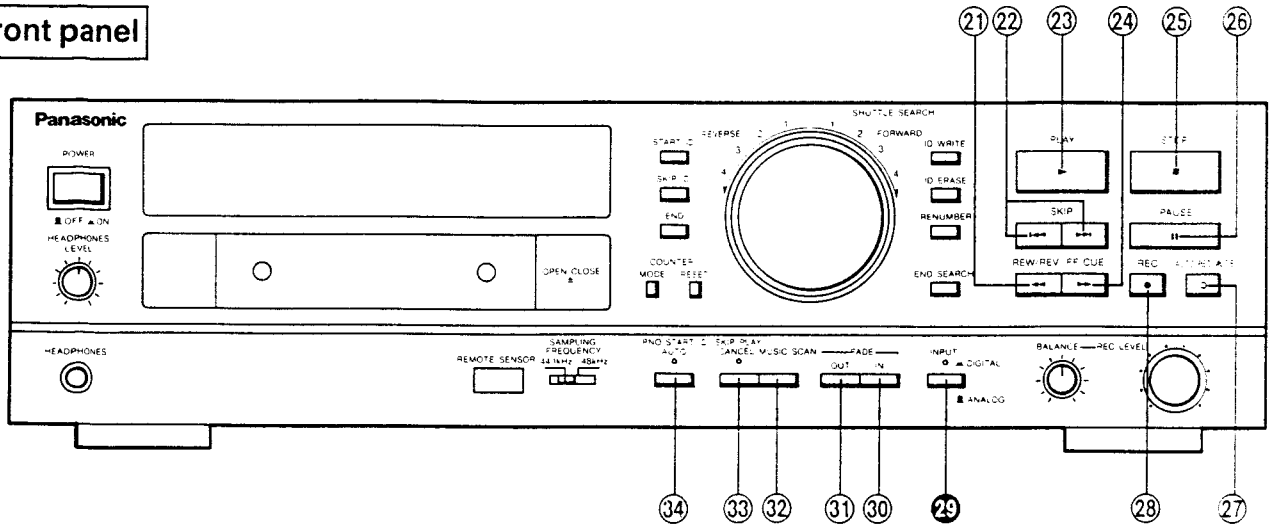

㉑ REW/REV button (◀◀ REW/REV)
Use to rewind the tape, or for audible high-speed search in play mode (review).

㉒ SKIP buttons (⏮ • ⏭ SKIP)
Use the skip buttons to advance to the desired program.
The ⏭ button skips the program forward
The ⏮ button skips the program backward
Repeated pressing of the Skip buttons causes the unit to skip forwards or backwards several programs.

㉓ PLAY button/indicator (▶ PLAY)
Use to initiate recording or playback mode.
Use also to record program numbers manually.

㉔ FF/CUE button (▶▶ FF/CUE)
Use to advance the tape rapidly, or for audible high-speed search (cue).

㉕ STOP button (■ STOP)
Use to stop all functions.
This button also clears the program memory.

㉖ PAUSE button/indicator (❚❚ PAUSE)
Use to temporarily interrupt playback or recording mode.

㉗ AUTO REC MUTE button (◯ AUTO REC MUTE)
Use to automatically insert a silent passage approximately four seconds long during a recording.

㉘ RECORD button/indicator (● REC)
Use to place the unit in record standby mode.

㉙ INPUT selector button/indicator (INPUT)
Use to select digital or analog recording input.

㉚ FADE IN button (FADE IN)
Use to start recording and increase the sound level gradually for approx. 2½ seconds, until full record level is reached.

㉛ FADE OUT button (FADE OUT)
Use to end a recording by gradually reducing the recorded sound level for approx. 5 seconds.

㉜ MUSIC SCAN button (MUSIC SCAN)
Use to play back the beginning of each recorded program on the tape for about 15 seconds.
This is useful for quick identification of program contents.

㉝ SKIP PLAY CANCEL button/indicator (SKIP PLAY CANCEL)
Use to release skip mode.

㉞ PNO/START ID AUTO button/indicator (PNO/START ID AUTO)
Use to automatically record program numbers or Start ID's during recording or indexing by detecting the beginning of signal after a blank position.

Front panel

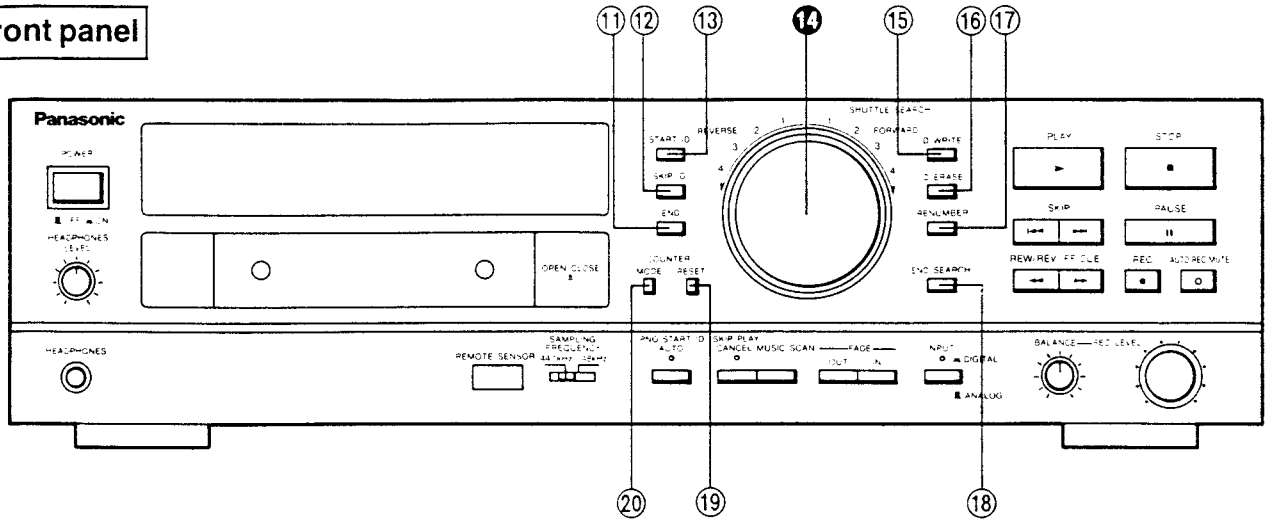

⑪ END button (END)
Use to record an End Mark on a recording.

⑫ SKIP ID button (SKIP ID)
Use to enter the Skip ID mode.

⑬ START ID button (START ID)
Use to enter the Start ID mode.

⑭ SHUTTLE SEARCH dial (SHUTTLE SEARCH)
Use to locate specific places on the tape during play and pause modes at high speed, in either forward or reverse directions.

⑮ ID WRITE button (ID WRITE)
Use to record Start or Skip ID's during indexing*.

*Indexing allows certain DAT subcode data that has been recorded on the tape to be changed without affecting the actual program recording.
With this unit, the following types of indexing are possible.
1. Recording or erasure of Start ID's at the beginning of a program
2. Recording or erasure of Skip ID's
3. Renumber function

⑯ ID ERASE button (ID ERASE)
Use to erase Start or Skip ID's during indexing.

⑰ RENUMBER button (RENUMBER)
Use to assign program numbers (01, 02, 03...) to Start ID's recorded during indexing.

⑱ END SEARCH button (END SEARCH)
Use to advance at high speed to the end of the recorded portion of the tape.
Use also to continue recording from the last recorded position, or to find the total number of programs or total time recorded on the tape (in the case of tapes where absolute time and program numbers have been recorded).

⑲ COUNTER RESET button (COUNTER RESET)
Use to reset the tape counter to "0000" (when the display mode is set to tape counter).

⑳ COUNTER MODE button (COUNTER MODE)
Use to select the desired counter mode, between Absolute time, Program time, Time Remaining, TOC and tape counter.

Remote control transmitter

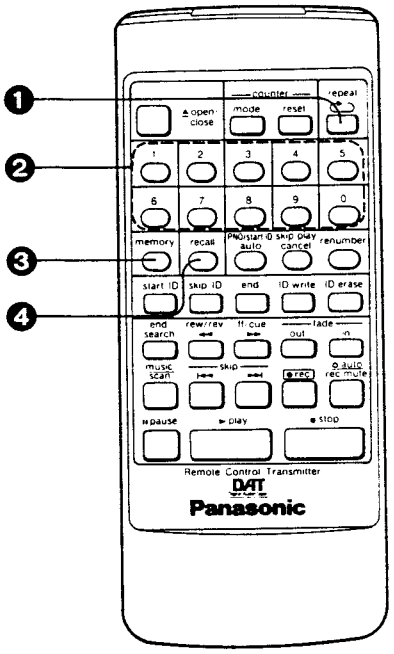

❶ **Repeat button (repeat ⟲)**
Use to repeat playback of a tape or a programed sequence.

❷ **Program buttons (1~9, 0)**
Use to select program numbers, to cue to a desired program, etc.

❸ **Memory button (memory)**
Use to program a random playback sequence.

❹ **Recall button (recall)**
Use to display and check program numbers that have been memorized.

Unnumbered buttons on the remote control transmitter function identically to their corresponding parts on the unit.

■ ACCESSORIES

- AC power supply cord 1
  (SJAD8 (EB) / RJA0003-K (EG))

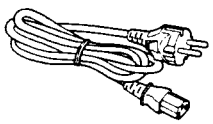

- Coaxial cable 1
  (SJPD19-1E)

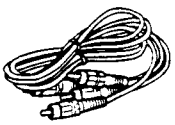

- Remote control transmitter 1
  (RAK-SV3002W)

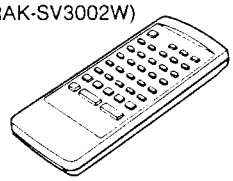

- Batteries 2
  (UM-4NEP-2S)

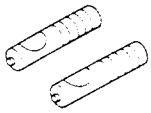

- Cleaning tape 1
  (RT-RCLP)

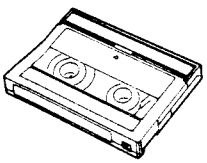

- Rack mount kit 1
  (RYQ0059-1)

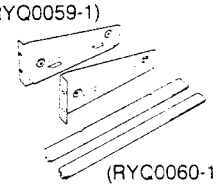

- Screws 8
  (XYN3+F10FZ)

Note: Configuration of AC power supply cord differs according to area.

Display panel

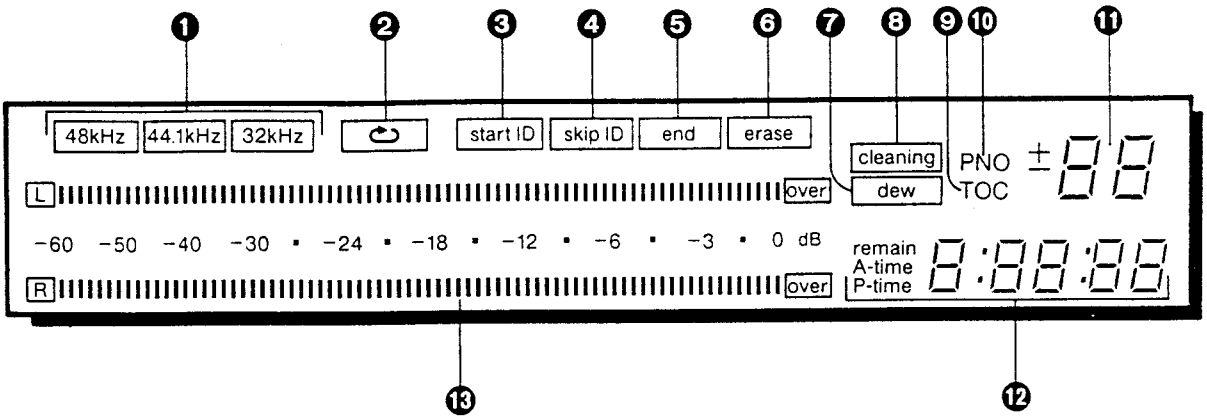

❶ **Sampling frequency indicators**
Displays sampling frequency of digital signals during recording or playback.
Changes automatically depending on input signal.

❷ **Repeat indicator**
This indicator is used for repeat loop-play function.
Indicates that all programs or memorized programs can be played back repeatedly ( ).

❸ **start ID indicator**
Indicates that a Start ID is being or has been recorded.

❹ **skip ID indicator**
Indicates that a Skip ID is being or has been recorded.

❺ **end indicator**
Indicates that an End Mark is being or has been recorded.

❻ **erase indicator**
Indicates that a Start ID or Skip ID is being erased.

❼ **dew indicator**
Indicates the formation of dew within the unit.

❽ **cleaning indicator**
Indicates that the DAT heads need cleaning.
(See page 38.)

❾ **TOC (table of contents) indicator**
Indicates the total program count and tape length of a tape onto which the TOC information has been recorded.

❿ **PNO (program number) indicator**
Indicates the number of the current program.

⓫ **Program number display**
Displays the TOC information when TOC indicator appears.
Displays the number of the program when PNO indicator appears.

⓬ **Counter display panel**
The following are displayed according to the setting of the counter mode button:
1) absolute time
This display is always shown when power is first switched on.
2) program time
3) remaining time
4) TOC information
5) tape counter

⓭ **Peak level meter**
Recording level in recording and playback level during playback are indicated by a bar graph. Standard I/O level of +4/−10 dBu is shown at −18 dB.

■ SV-3700 DAT MAINTENANCE CHART

• REGULAR MAINTENANCE

The purpose of periodic maintenance as recommended is to keep the equipment in the best possible operating condition throughout its useful life. Observance of this maintenance schedule ensures that maximum performance and reliability is obtained from the machine.

Regular maintenance is necessary because the DAT Recorder is a high-technology piece of equipment, containing DC motors, head cylinder assemblies, and a complex mechanism. These components deteriorate over time. Dust and dirt can clog the head gap, which affects the sound. In light of this, it is very important that overall maintenance be performed according to the maintenance chart to avoid problems resulting from heavy image. Maintenance should also be performed after any repairs on the equipment.

Maintenance is particularly recommended for DAT Recorders used in commercial and broadcast applications for serveral reasons. Installation and application are frequently under less than ideal conditions, such as long usage times and poor environmental conditions. All of this adversely affects the life span and performance of the machine. Regular maintenance assures that the purchaser obtains maximum value for this expenditure.

Note: Refer to the hour meter to know when to perform the maintenance.

Part Name	Part Number	500	1000	1500	2000	2500	3000	3500	4000	4500	5000
Upper Cylinder	VEH0460	○	●	○	●	○	●	○	●	○	●
Cylinder Unit	VEG0752	○	○	○	○	○	○	○	○	○	●
S. Load Arm Ass'y	RXL0052										●
T. Load Arm Ass'y	RXL0054										●
Load Cam	RDK0006-1						●				
Capstan Unit	REM0001	○	○	○	○	○	○	○	○	○	●
Post Roller	RXP0008	○	○	○	○	○	○	○	○	○	●
Guide Roller	RXP0027	○	○	○	○	○	○	○	○	○	●
Pinch Roller	1NB0001ZA	○	○	○	○	○	●	○	○	○	○
S. Reel Ass'y	RXR0006										●
T. Reel Ass'y	RXR0007										●
BT Lever	RXL0048										●
Tension Band Ass'y	RXL0036						●				
S. Brake Ass'y	RXL0049						●				
T. Brake Ass'y	RXL0050						●				
Idler Gear	RDG0071										●
Mode Motor Ass'y	REM0009								●		
Mode Cam	RDK0007-1										●
M Gear B	RDG0067										●
Drive Gear Ass'y	RXG0011						●				
Idler Gear (F)	RDG0069										●
Idler Gear (P)	RDG0068										●
Mode SW Ass'y	RES0002						●				
Load SW Ass'y	RES0001										●
Cassette SW	EVQWR4002										●
Earth Terminal	RUS740ZA										●
Loading Motor	MMN-6FBRC8S										●
Belt	SMQ20025										●
Leaf SW	SSPD18										●

● Replacement, ○ Cleaning

• DAT Head and Tape Transport Cleaning

Through normal usage of any tape machine, dirt and debris from the tape accumlates on the heads, which eventually causes performance problems. By using a cleaning cassette regularly, dirt buildup can be minimized, prolonging the life of the tape heads, and also keeping tape posts, tape guides, and the pinch roller clean.

• CLEANING

1. Play the cleaning cassette (Panasonic Part No. RT-RCLP) for 15-20 seconds.
2. Do not use the same part of the cleaning tape more than once.
3. Clean all tape contact surface, including A/C head upper and lower drum, thoroughly with a soft cloth soaked in alcohol.
4. Clean both heads by gently rubbing in a horizontal direction, as depicted, using a head cleaning stick (VFK27) or a lint free cloth moistened with alcohol.
5. Wipe all tape contact surfaces, including upper and lower drum, with a dry soft cloth to ensure that all residual moisture is removed from the tape contact surfaces.

Note:
1. When cleaning the upper drum, hold it secure with your finger tips.
2. Use solvents sparingly, excess alcohol will dilute and remove the bearing lubricant in the capstan motor and rotary guides.

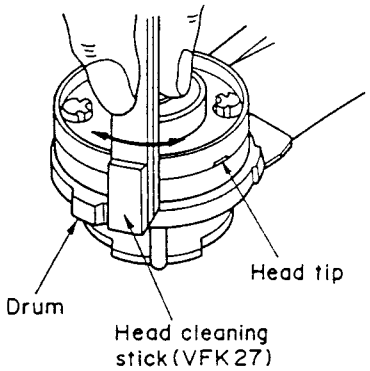

• IMPORTANT

After cleaning the head and tape contact surfaces, check the error rate using the error rate reference tape (Part No.RD-ER01). Target error rate is less than 50. A unit with a new head cylinder should be capable of producing error rates below 10, as long as the reference tape is in good condition.
For information on how to display the error rate, see page 84.

REGARDING THE CLEANING INDICATOR...
The cleaning indicator will illuminate when the error rate remains higher than 1000 for more than 10 seconds.
Although dirt and debris are the most common cause of an elevated error rate, there are other conditions that may cause it. Therefore, do not assume that a cleaning indication means that the head is dirty.

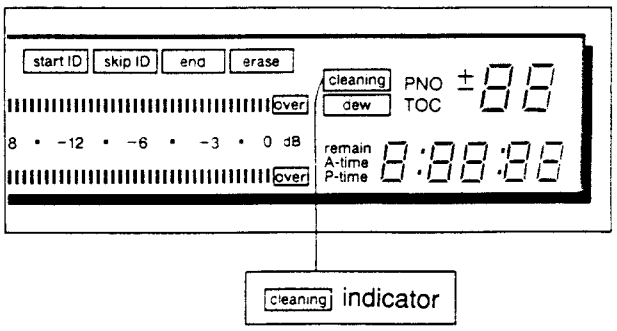

• **Side view**

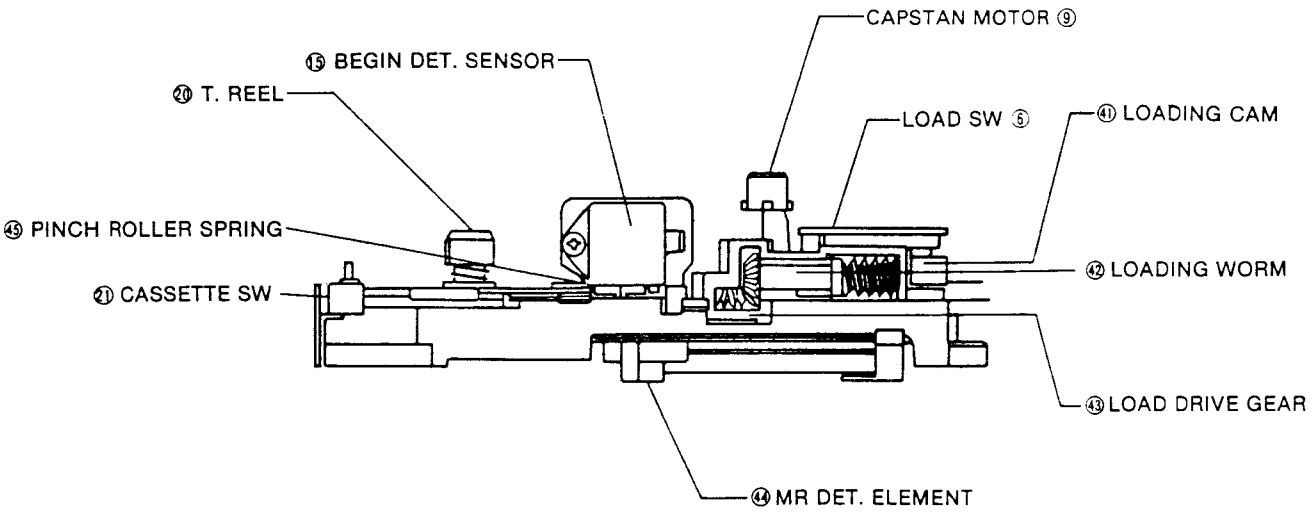

• **Bottom view**

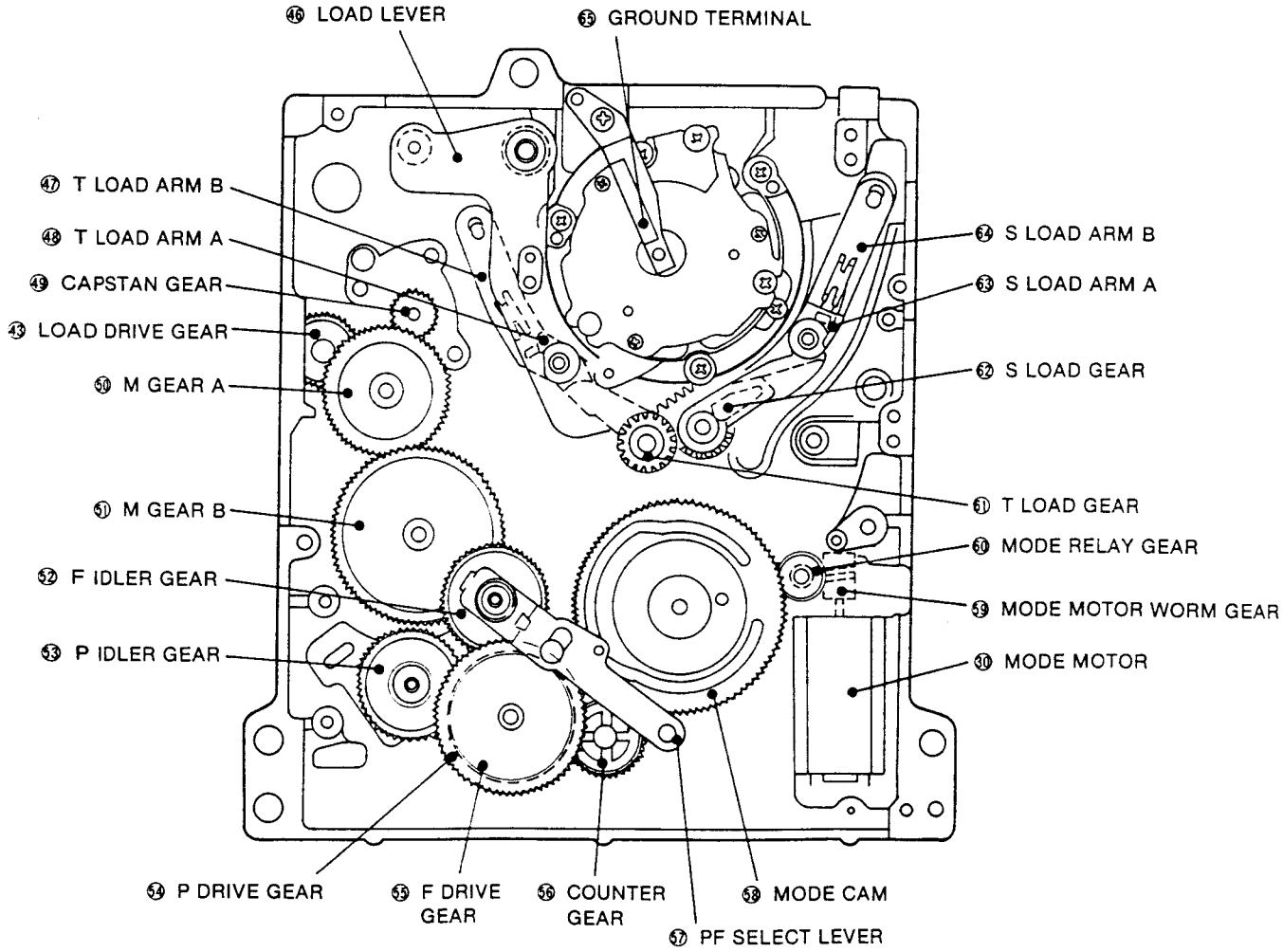

• MECHANISM COMPONENT LAYOUT

• Top view

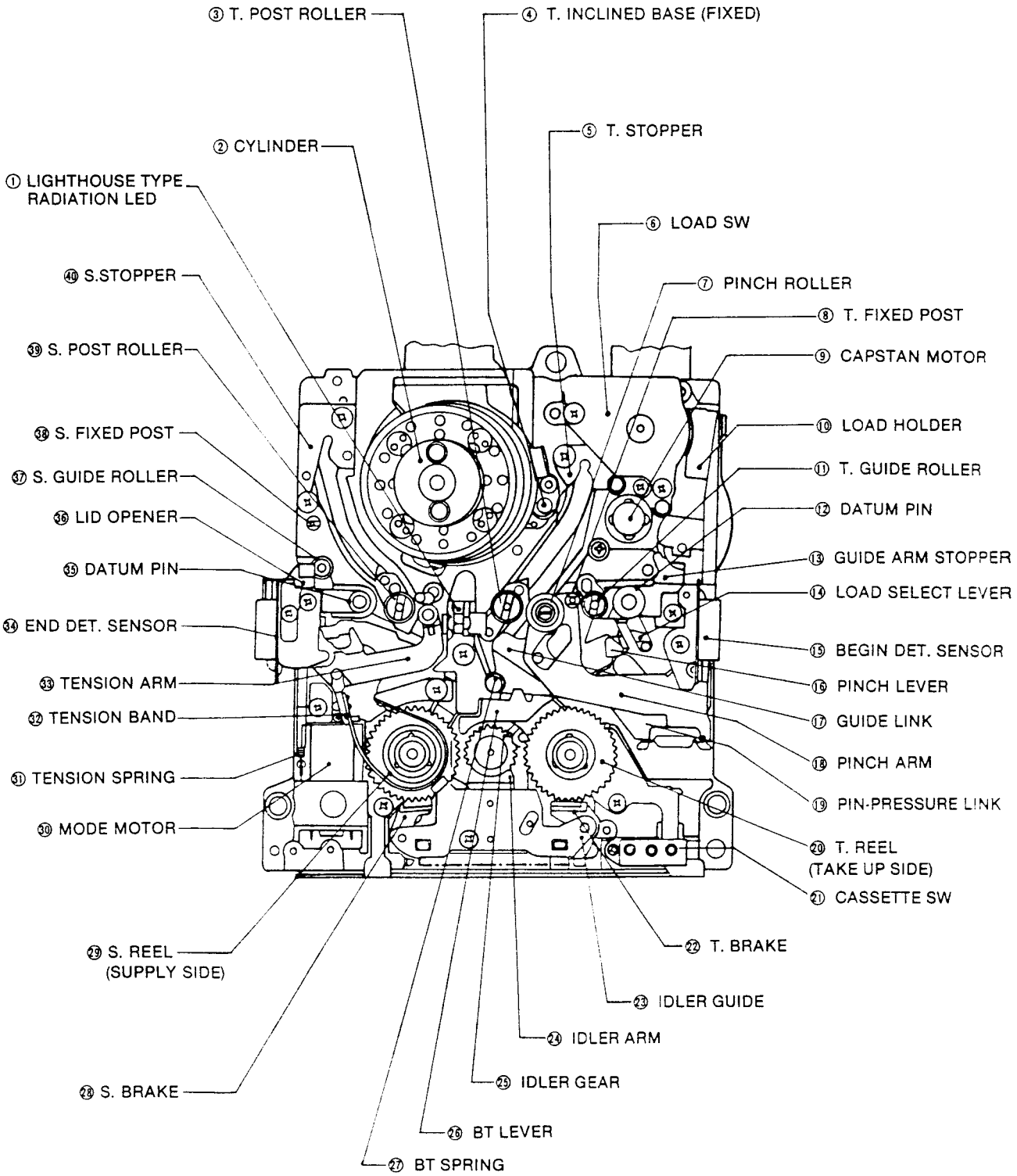

㊿ M GEAR A	Transmits movement of capstan gear and load drive gear.	㊽ MODE CAM	Uses movement transmitted from mode relay gear to detect mode positions.
㊶ M GEAR B	Transmits movement of M gear A and F (R) idler gear, engages and disengages in accordance with mode.	㊾ MODE MOTOR WORM GEAR	Transmits movement of mode motor and mode relay gear.
㊷ F IDLER GEAR	Transmits movement of M gear B and F drive gear.	㊿ MODE RELAY GEAR	Transmits movement of mode motor worm gear and mode cam.
㊸ P IDLER GEAR	Transmits movement of M gear B and P drive gear.	㊶ T LOAD GEAR	Transmits movement of load lever and S load gear.
㊹ P DRIVE GEAR	Transmits movement of P idler gear and counter gear.	㊷ S LOAD GEAR	Transmits movement of T load gear and S load arm A (B).
㊺ F DRIVE GEAR	Transmits movement of F idler gear and counter gear.	㊸ S LOAD ARM A	Uses movement transmitted from S load gear to play loading.
㊻ COUNTER GEAR	Transmits movement of F (P) drive gear and idler gear, engages and disengages in accordance with mode.	㊹ S LOAD ARM B	
㊼ PF SELECT LEVER	Switches engagement and disengagement of F (P) idler gear in accordance with mode conditions.	㊺ GROUND TERMINAL	Ground terminal for cylinder motor.

• REMOVAL OF THE UPPER CYLINDER

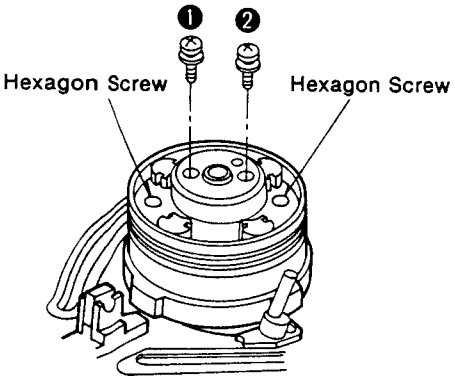

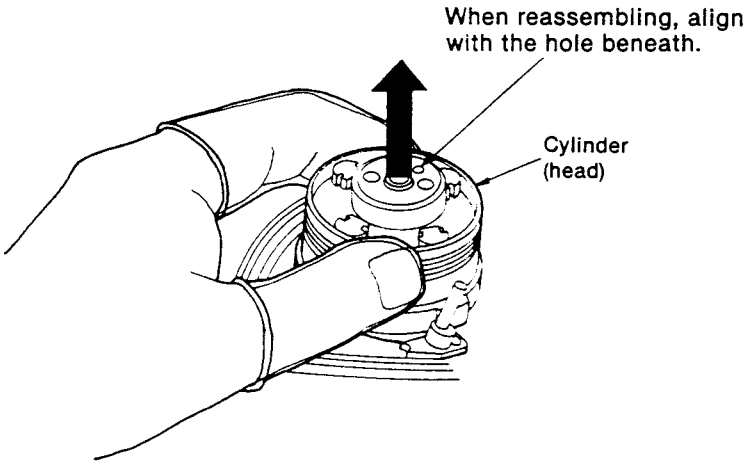

1. Remove the 2 screws (❶, ❷).

Caution: Please do not touch Hexagon screws.

2. Remove the cylinder (head) in the direction of the arrow.

Note: Do not touch the cylinder (head) with your bare hand; always be sure to wear a glove or other protection.

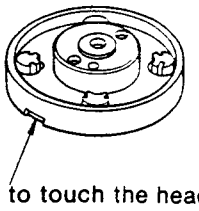

* When reassembling the cylinder (head), be sure that the direction is correct. (If it is assembled in the wrong direction, data read errors will occur.)

• MECHANISM CONTROLS AND FUNCTIONS

① LIGHT HOUSE TYPE RADIATION LED	Lighthouse-shaped, LEDs blink at start and end of tape.
② CYLINDER	30mm in diameter, 40 FG pulses, maintains specified speed of 1000 to 3000rpm.
③ T. POST ROLLER	Regulates tape travel position (upper edge).
④ T. INCLINED BASE (FIXED)	Regulates angle (90°) at which tape is wound around cylinder (stationary).
⑤ T. STOPPER	Determines position of T post roller base during loading.
⑥ LOAD SW	Two-bit rotary switch, detects loading position.
⑦ PINCH ROLLER	Presses against tape during play and review.
⑧ T. FIXED POST	Regulates tape travel position.
⑨ CAPSTAN MOTOR	1.5mm in diameter, 290 FG pulses.
⑩ LOAD HOLDER	Contains loading drive gear and worm gear, engages and disengages M gear A.
⑪ T. GUIDE ROLLER	Regulates tape travel position (top edge).
⑫ DATUM PIN	Regulates width and height (right side) during loading of cassette tape.
⑬ GUIDE ARM STOPPER	Determines position of T guide roller base K during loading.
⑭ LOAD SELECT LEVER	Switches engagement and disengagement of loading gear in accordance with loading conditions.
⑮ BEGIN DET. SENSOR	Light-receiving element for LED (detection at start of tape).
⑯ PINCH LEVER	Presses pinch roller against tape during play and review.
⑰ GUIDE LINK	Links T post roller base and guide roller base.
⑱ PINCH ARM	Comprised of pinch roller and T holding post, presses against the capstan.
⑲ PIN-PRESSURE LINK	Connected by the pin pressure spring and the pinch arm.
⑳ T. REEL (TAKE UP SIDE)	Take-up reel base, 64 FG pulses.
㉑ CASSETTE SW	Detects cassette information (mistaken erasure, cassette detection).
㉒ T. BRAKE	Presses brake gear against reel base gear to perform braking.
㉓ IDLER GUIDE	Holding cover for idler arm and S and T brakes.
㉔ IDLER ARM	Moves left or right in accordance with mode condition, transmits movement of counter gear to S and T reels.
㉕ IDLER GEAR	Transmits movement to S and T reels in accordance with mode.
㉖ BT LEVER	Applies back tension to T reel during review.
㉗ BT SPRING	Provides pressure for back tension lever.
㉘ S. BRAKE	Presses brake shoe against S reel base gear to perform braking.
㉙ S. REEL (SUPPLY SIDE)	Supply reel base, 64 FG pulses.
㉚ MODE MOTOR	6.5V DC motor, switches mode by forward and reverse revolution.
㉛ TENSION SPRING	Provides back tension force of tension regulator.
㉜ TENSION BAND	Mounted to tension regulator, applies back tension to S reel base.
㉝ TENSION ARM	Detects tape condition and applies back tension during play and review.
㉞ END DET. SENSOR	Light-receiving element for LED (detection at end of tape).
㉟ DATUM PIN	Regulates width and height (left side) during loading of cassette tape.
㊱ LID OPENER	Opens cassette lid during loading of tape.
㊲ S. GUIDE ROLLER	Regulates tape travel position (bottom edge).
㊳ S. FIXED POST	Regulates tape travel (bottom edge).
㊴ S. POST ROLLER	Regulates tape travel position (top edge).
㊵ S. STOPPER	Determines position of S post roller base during loading.
㊶ LOADING CAM	Uses movement transmitted from loading worm to move loading lever.
㊷ LOADING WORM	Transmits movement of loading drive gear and loading cam.
㊸ LOAD DRIVE GEAR	Transmits movement of M gear A and loading worm, engages and disengages in accordance with mode.
㊹ MR DET. ELEMENT	Detects magnetic changes (290 pulses) of flywheel.
㊺ PINCH ROLLER SPRING	Mounted to the pinch arm, returns the pinch roller.
㊻ LOAD LEVER	Transmits movement of load cam and load gear.
㊼ T LOAD ARM B	Uses movement transmitted from T load gear to play loading.
㊽ T LOAD ARM A	
㊾ CAPSTAN GEAR	Uses movement transmitted from capstan motor to move M gear A.

Ref. No. 5	Removal of the loading unit

Procedure 1→2→5

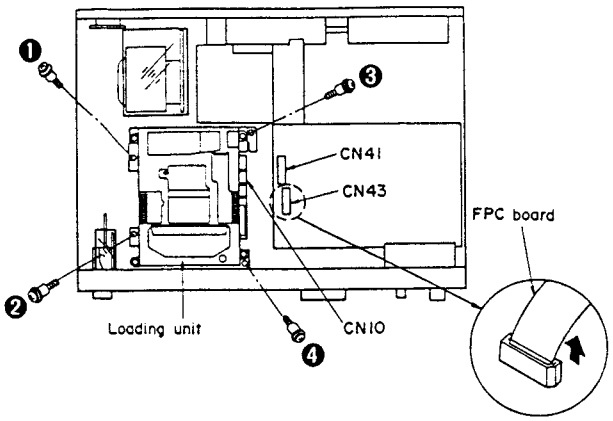

1. Remove the FPC board (CN43).
2. Remove the connectors (CN10, CN41).
3. Remove the 4 screws (❶~❹).

Ref. No. 6	Removal of the main P.C.B.

Procedure 1→6

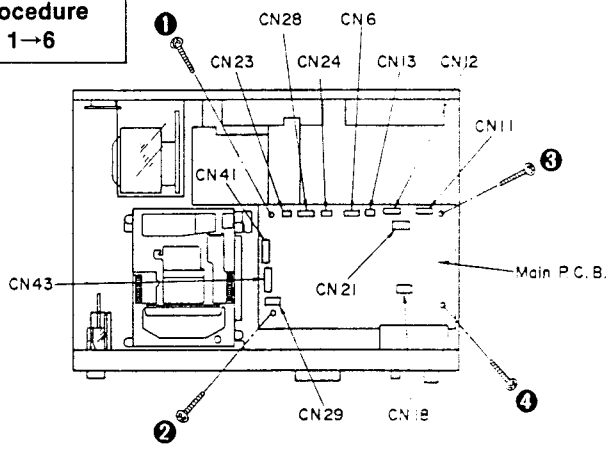

1. Remove the connectors (CN11, CN12, CN41).
2. Remove the flat cables (CN6, CN13, CN18, CN23, CN24, CN28, CN29).
3. Remove the FPC boards (CN21, CN43).
4. Remove the 4 screws (❶~❹).

Ref. No. 7	Removal of the servo P.C.B.

Procedure 1→2→5→7

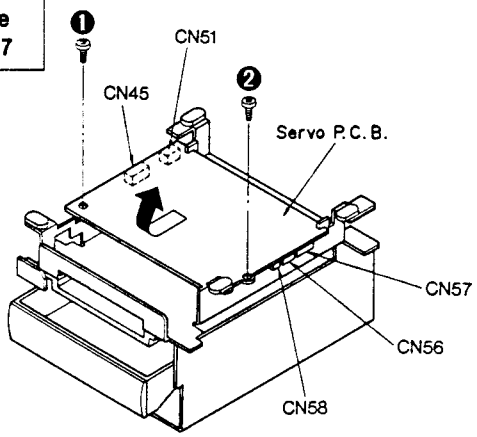

1. Remove the connectors (CN45, CN51, CN56, CN57, CN58).
2. Remove the 2 screws (❶, ❷).

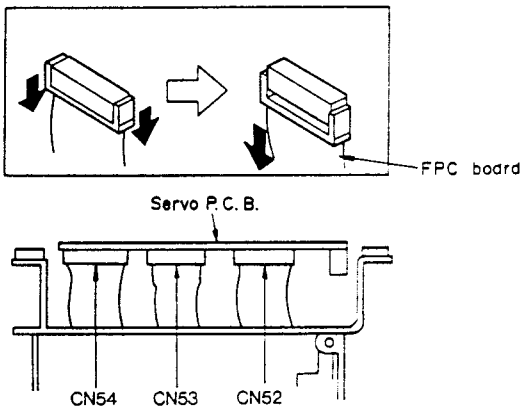

3. Remove the servo P.C.B. in the direction of the arrow.
4. Remove the FPC boards (CN52, CN53, CN54).

Ref. No. 8	Removal of the RF P.C.B.

Procedure 1→2→5→8

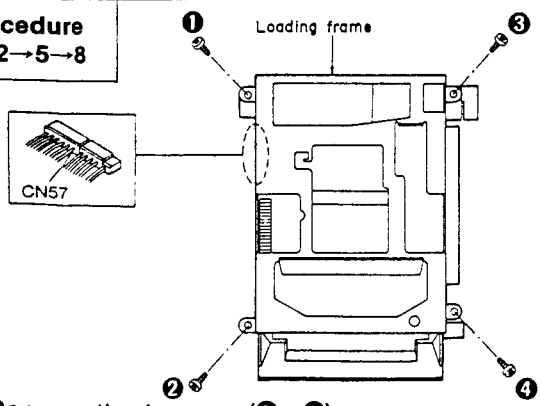

1. Remove the 4 screws (❶~❹).
2. Remove the loading frame.
3. Remove the connector (CN57).

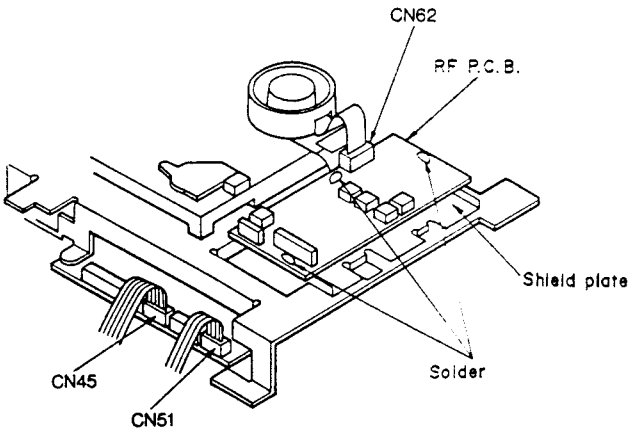

4. Unsolder the shield plate.
5. Remove the FPC board (CN62).
6. Remove the connectors (CN45, CN51).

■ DISASSEMBLY INSTRUCTIONS

Ref. No. 1	Removal of the cabinet
Procedure 1	

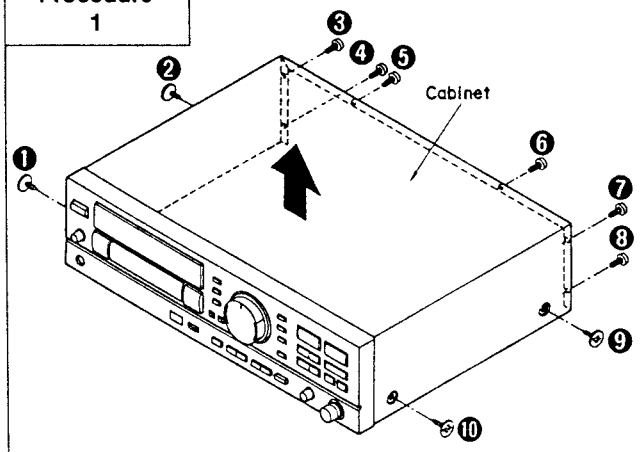

• Remove the 10 screws (❶~❿).

Ref. No. 2	Removal of the front panel
Procedure 1→2	

1. Remove the flat cables (CN7, CN18, CN21, CN29).
2. Remove the FPC board (CN1001).

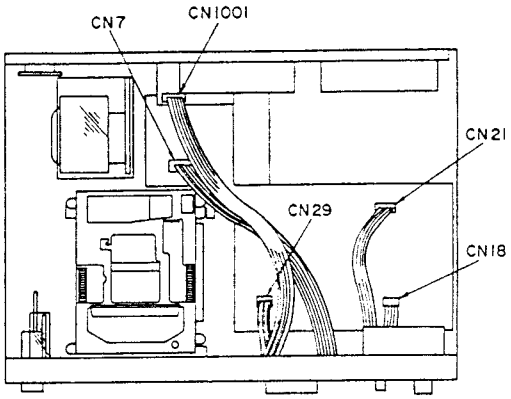

• Pull out the flat cable while pressing the connector. (CN7, CN18, CN21, CN29)

1. Lift the connector.
2. Pull out the FPC board.

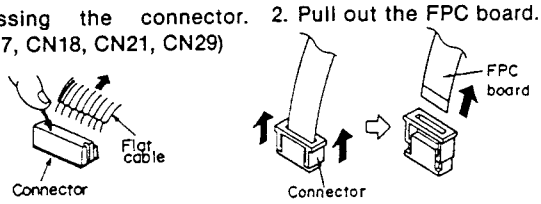

Ref. No. 3	Removal of the power switch P.C.B. and headphones jack P.C.B.
Procedure 1→2→3	

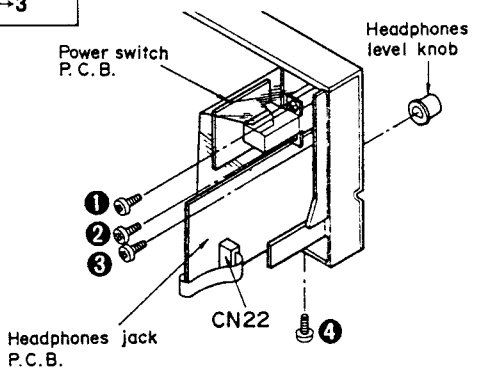

■ **Power switch P.C.B.**
1. Remove the 2 screws (❶, ❷).

■ **Headphones jack P.C.B.**
1. Remove the headphones level knob.
2. Remove the FPC board (CN22).
3. Remove the 2 screws (❸, ❹).

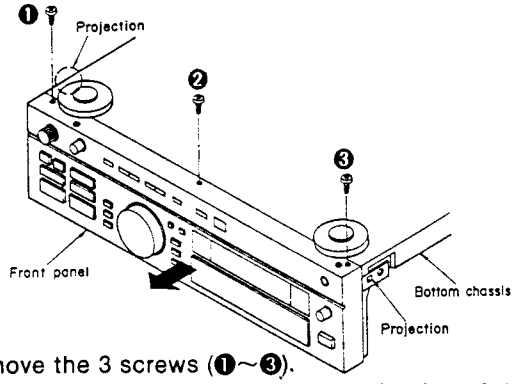

3. Remove the 3 screws (❶~❸).
4. Remove the front panel from the projection of the bottom chassis.

Ref. No. 4	Removal of the search P.C.B., operation P.C.B. and balance/rec level P.C.B.
Procedure 1→2→4	

■ **Search P.C.B.**
1. Pull out the search knob.
2. Remove the nut.

■ **Operation P.C.B.**
1. Remove the 10 screws (❶~❿).

■ **Balance/rec level P.C.B.**
1. Pull out the balance knob and rec level knob.
2. Remove the 3 screws (⓫~⓭).

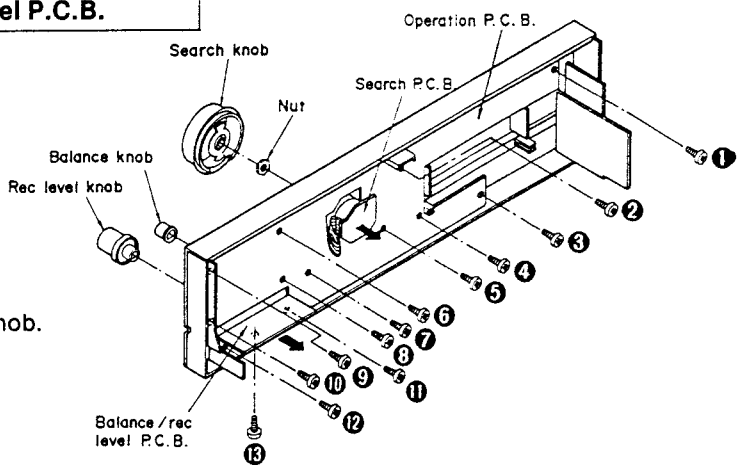

Ref. No. 15	Removal of the parallel remote P.C.B.
Procedure 1→12→13→15	

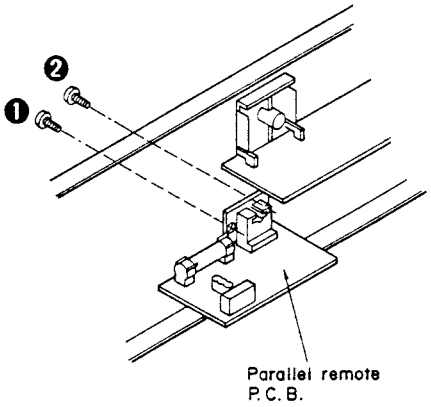

• Remove the 2 screws (❶, ❷).

Ref. No. 16	Removal of the power supply P.C.B. and regulator IC P.C.B.
Procedure 1→12→13→16	

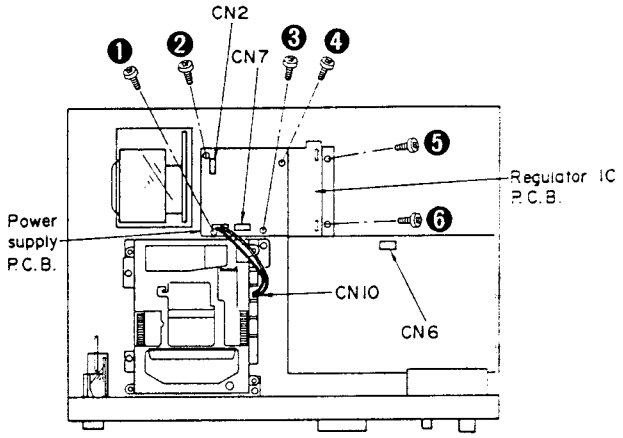

1. Remove the connector (CN10).
2. Remove the flat cables (CN2, CN6, CN7).
3. Remove the 6 screws (❶~❻).

Ref. No. 17	Removal of the regulator IC
Procedure 1→12→13→16→17	1. Unsolder the regulator IC. 2. Remove the 4 screws (❶~❹).

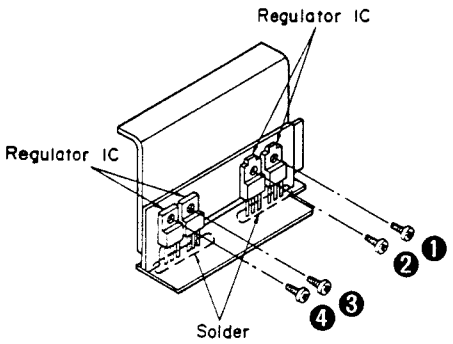

• When mounting the regulator IC, apply silicone compound (SZZ0L15 or equivalent) to the rear of the regulator IC.

Ref. No. 18	Removal of the output level switch P.C.B. and analog input/output terminal P.C.B.
Procedure 1→18	■ **Output level switch P.C.B.** 1. Remove the 2 screws (❶, ❷). 2. Remove the flat cable (CN13). ■ **Analog input/output terminal P.C.B.** 1. Remove the 8 screws (❸~❿). 2. Remove the flat cables (CN11, CN12).

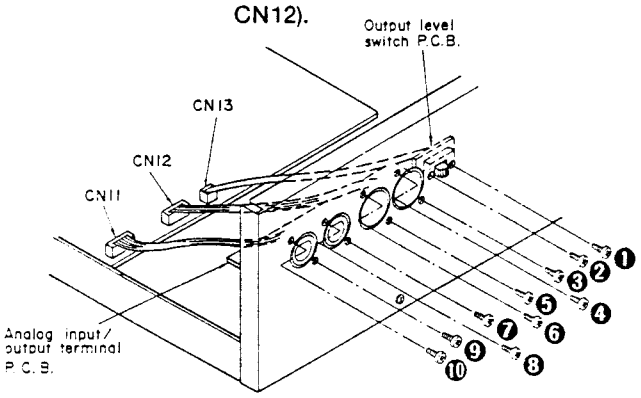

Ref. No. 19	Removal of the voltage select switch P.C.B.
Procedure 1→19	

• Remove the 2 screws (❶, ❷).

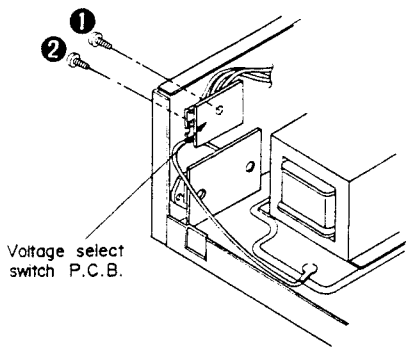

Ref. No. 9	Removal of the switch P.C.B.

Procedure 1→2→9

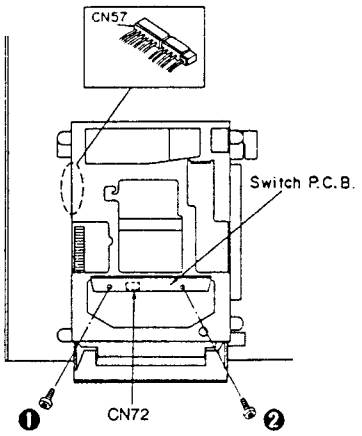

1. Remove the 2 screws (❶, ❷).
2. Remove the connectors (CN57, CN72).

Ref. No. 10	Removal of the loading motor

Procedure 1→2→10

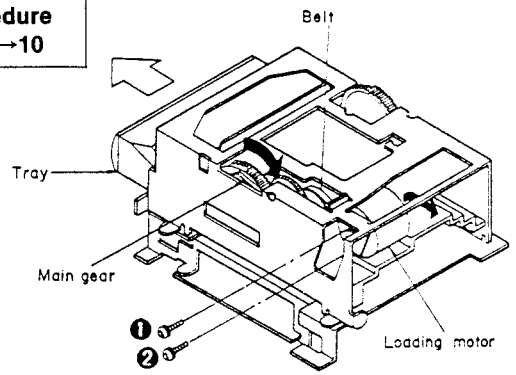

1. Roll the main gear in the direction of the arrow, and draw out the tray.
2. Remove the belt.
3. Remove the 2 screws (❶, ❷).
4. Remove the loading motor in the direction of the arrow.

Ref. No. 11	Removal of the power transformer

Procedure 1→11

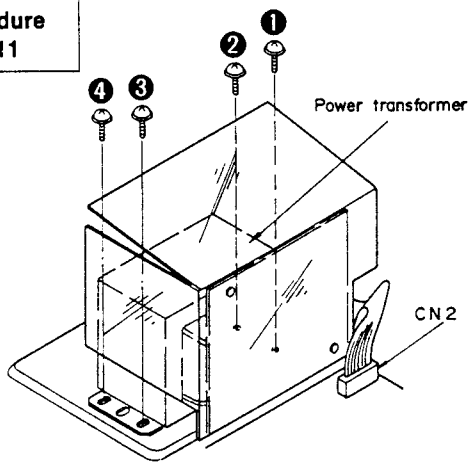

1. Remove the flat cable (CN2).
2. Remove the 4 screws (❶~❹).

Ref. No. 12	Removal of the AC IN P.C.B.

Procedure 1→12

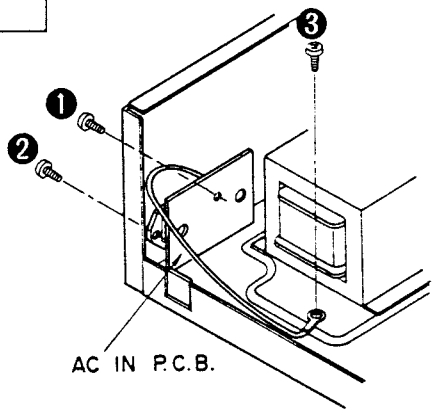

• Remove the 3 screws (❶~❸).

Ref. No. 13	Removal of the rear panel

Procedure 1→12→13

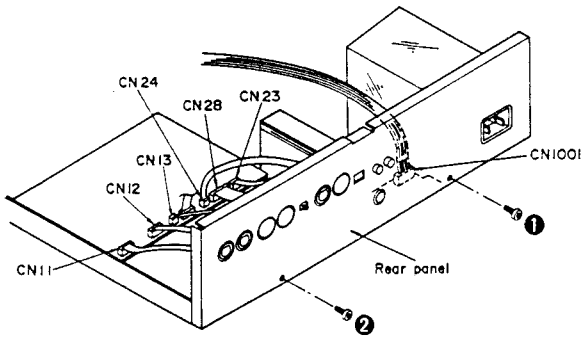

1. Remove the connectors (CN11, CN12).
2. Remove the flat cables (CN13, CN23, CN24, CN28, CN1001).
3. Remove the 2 screws (❶, ❷)

Ref. No. 14	Removal of the digital input/output terminal P.C.B.

Procedure 1→12→13→14

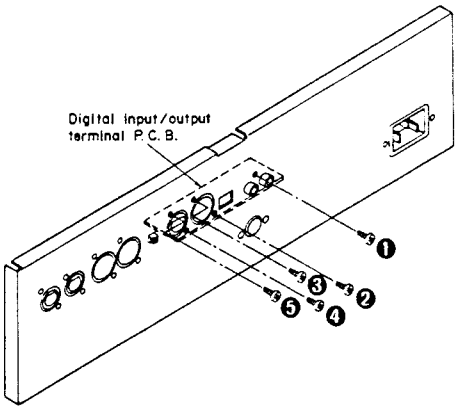

• Remove the 5 screws (❶~❺).

• ELECTRICAL ADJUSTMENT

• Adjustment points

※ VR106 do not require adjustment; if the VR is replaced or require readjustment, set the dial to the center positions.

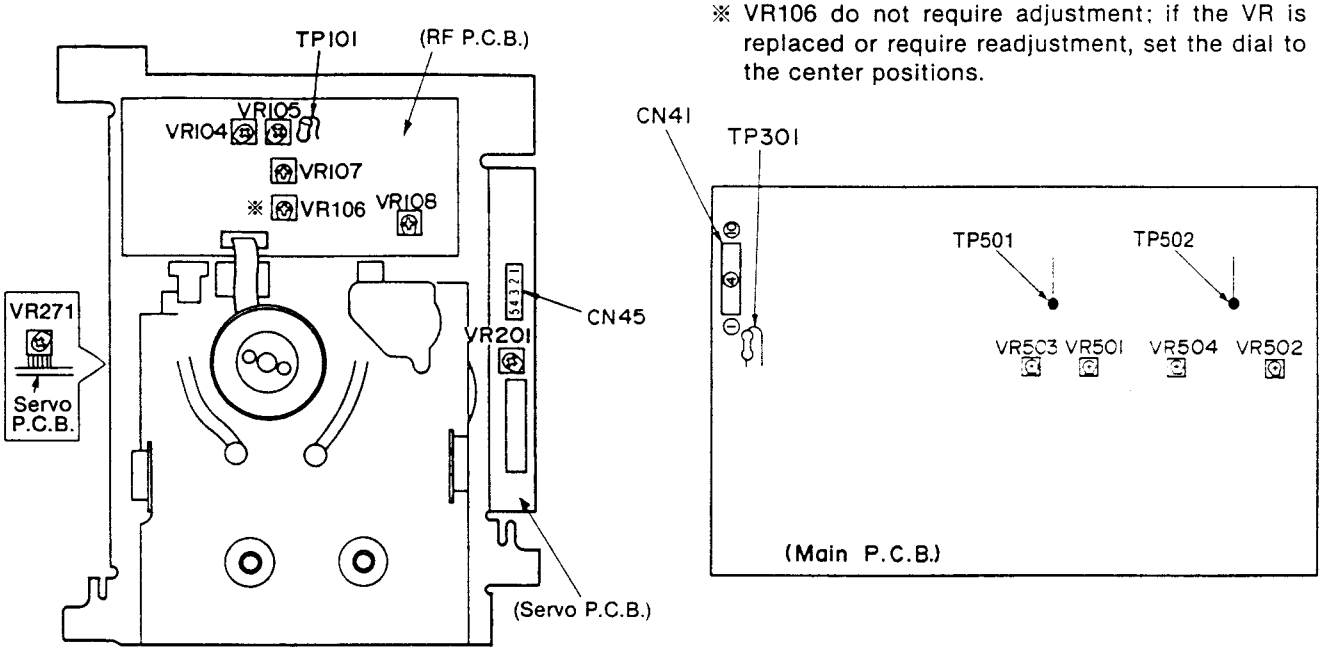

Equipment and Tools

- 2-channel 30MHz oscilloscope with external trigger and dual time base
- 2 oscilloscope probes (10 : 1)*
- Frequency counter
- AF oscillator (OSC)
- Distortion analyser
- DC electronic voltmeter (EVM)
- Post roller adjustment screwdriver
  : SZZV1102C
- Standard test tapes
  : RD-PG01 (PG reference tape)
  : RD-ER01 (Error rate tape)
  : RD-LR02 (Linearity adjustment tape)
- Blank DAT cassette for recording and playback
  : RT-R60P, RT-R90P, RT-R120P
- Standard electrical tools and equipment

* **NOTE:** The oscilloscope voltage settings in the charts and the waveform examples assume use of the specified 10: 1 probes.

Ref. No. 20	How to check the main P.C.B.
Procedure 20	

To gain access to the bottom of the main P.C.B., disconnect CN18 and CN21 in order to turn the board upward.
Connect a jumper wire between pins 1 & 2 and between pins 4 & 5 of CN18 when operating the unit in this condition.

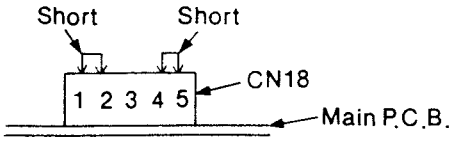

■ MEASUREMENTS AND ADJUSTMENTS

• PREPARATION

(1) Remove the cabinet
(Refer to Procedure 1 under "Disassembly Instructions").

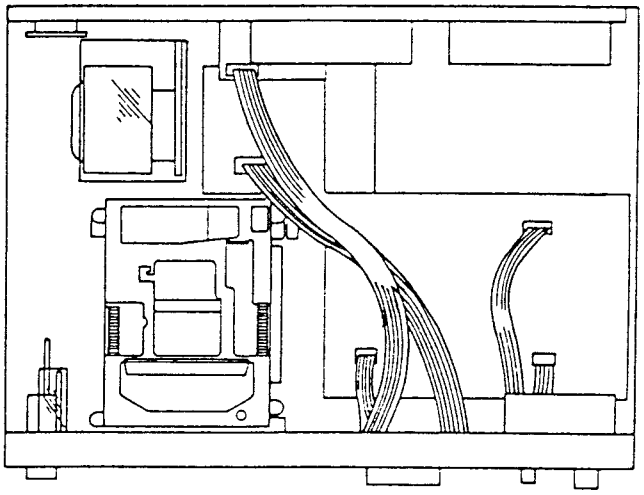

■ If the loading unit is to be removed for adjustment, note the following.

(PREPARATIONS)

(1) Remove the loading unit. (With the underside facing up.)
(Refer to Procedure 5 under "Disassembly Instructions." However, leave the flat cable and the connector as they are.)
(2) Open the cassette holder.
(3) Move the slider opening/closing plate of the removed loading unit in the direction indicated by the arrow in Fig. 1, and hook it above the prong of the reinforcement plate.
Caution: The slider opening/closing plate will be deformed if it is left as is.
(4) Place a tape with the slider lock released in the mechanism.
(5) Switch on the power and check the loading operation.

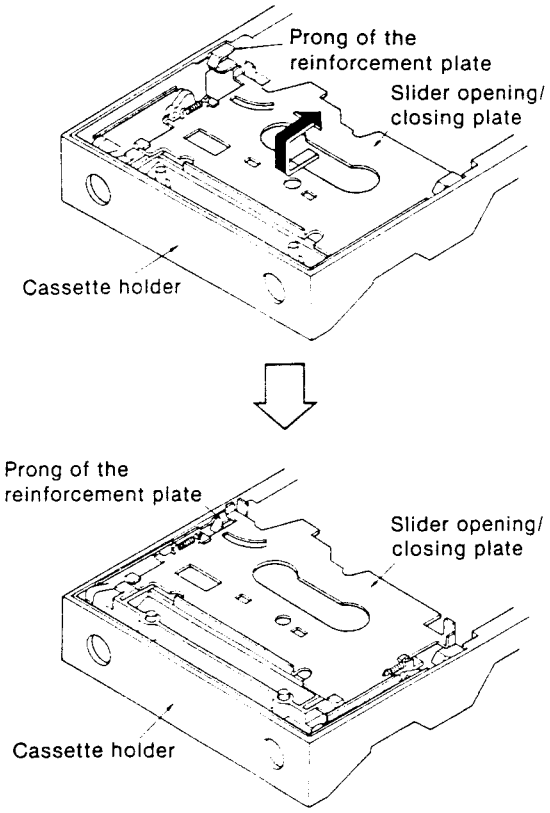

Fig. 1

3. ATF Gain Adjustment

1. Set up the oscilloscope and connect as shown below.

	CH-1	CH-2
Test point	**CN45 ③ (PILOT)**	**TP301 (R3CP)**
Volts/Div.	50mV	0.5V
Time/Div.	5msec.	
Delay	0.1msec.	
Trig.	CH-2	
AC-GND-DC	AC	DC
Adjustment point	**VR107**	

2. Load and play the error rate tape (RD-ER01).
3. Adjust the delay time for the dual time base to select and display the PILOT signal with the largest amplitude.
4. Adjust **VR107** so that the amplitude of the PILOT signal is **1.4±0.2Vp-p**. Check the amplitudes of the other PILOT signals to insure that they are a minimum of **1.2Vp-p**. If not optimize the adjustment of **VR107** for the minimum signal level.

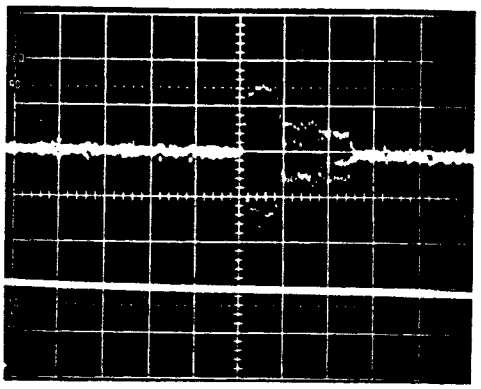

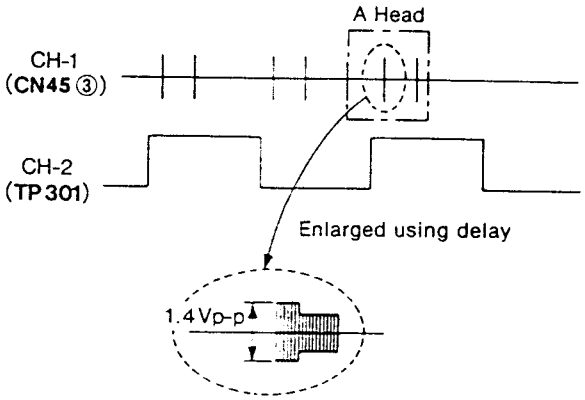

4. ATF RF Recording Level Adjustment

NOTE: This adjustment should only be made after confirming the playback "ATF Gain Adjustment" in step 3 above. Failing to do so will invalidate this adjustment.

1. Make a "0" level recording:
   (a) Load a blank tape (RT-R60P etc.) into the unit.
   (b) Put the unit into RECORD mode.
   (c) Run the tape, recording for a minimum of 20 to 30 seconds.
   (d) Rewind the tape to the beginning of the "0" level signal recording.
2. Connect and set up the oscilloscope as follows:

	CH-1	CH-2
Test point	**CN45 ③ (PILOT)**	**TP301 (R3CP)**
Volts/Div.	50mV	0.5V
Time/Div.	2msec.	
Delay Time/Div.	0.2msec.	
Trig.	CH-2	
AC-GND-DC	AC	DC
Adjustment point	**VR104**: Head A, **VR105**: Head B	

3. While playing back the blank signal portion of the tape, verify that the signal amplitude falls in the range of **1.4±0.2Vp-p**.

Standard value: 1.4±0.2Vp-p

4. If the ATF signal is not within specification press the stop button and adjust **VR104** and **VR105** accordingly. Making finer adjustments as the trials approach the specified level.

LEVEL/HEAD	A: **VR104**	B: **VR105**
More than 1.6V	Turn ↻	Turn ↻
Less than 1.4V	Turn ↺	Turn ↺

After making the adjustment, make another blank signal recording, on a different portion of the tape (use the END SEARCH feature), for 20 to 30 seconds. Rewind the tape to the beginning of the new recording and repeat from step 3 until the specification is met.

Note:
It is necessary to use a different portion of the tape for each trial because DAT does not erase the original signal, it "over writes" the new signal. Using a new portion of the tape will prevent maladjustment due to incomplete "over write" of the previously recorded signal.

1. PLL Free Run Adjustment

1. Connect the frequency counter as shown in figure.
2. Set the power switch to **"ON"**.
3. Open the cassette holder drawer.
4. Adjust **VR108** as required until the frequency counter reads **9.2±0.2MHz.**

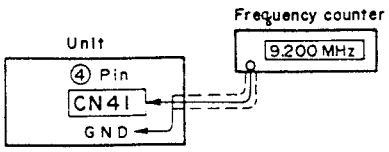

2. PG Phase Adjustment

1. Set up the oscilloscope and connect as shown below.

	CH-1	CH-2
Test point	**TP101 (RPRF)**	**TP301 (R3CP)**
Volts/Div.	50mV	0.5V
Time/Div.	5msec.	
Delay Time/Div.	50μsec.	
Trig.	CH-2	
AC-GND-DC	AC	DC
Adjustment point	**VR201**	

2. Note the "t" time indicated on the PG reference tape (RD-PG01), then load and play the tape.
3. While the tape is being played, the waveform shown on the right should appear.
4. Adjust the delay time for the dual time base to display the leading edge of the CH-2 (R3CP) waveform.
5. The time from the leading edge of R3CP to the leading edge of the **522kHz** portion of the RF wafeform must be within **±40μsec** of the time indicated on the PG reference tape. Adjust **VR201** as required, so that the time "t" (in the figure below), falls within specified limits.

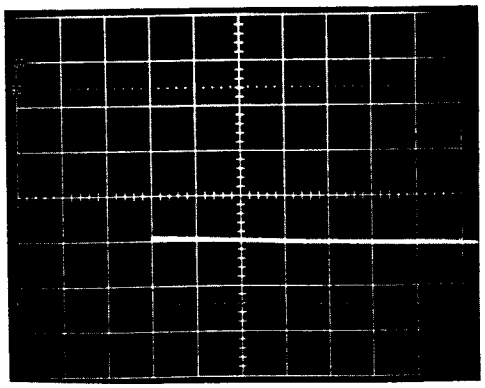

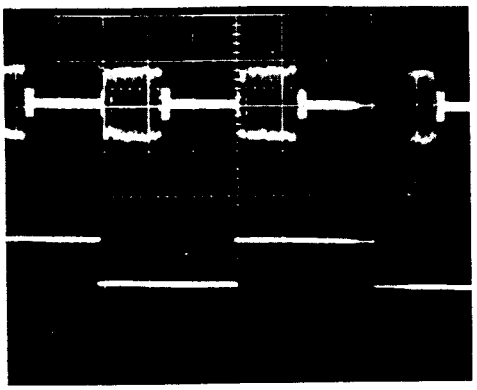

Note:
If the output levels of heads A and B are not equal, the "ATF RF Recording Level Adjustment" described in procedure 4 might be made improperly.
Adjust the ATF RF Recording Level by following procedure 4 and then check the output level of the heads again. (At this time, it is not necessary to make adjustment dascribed in procedure 2.)

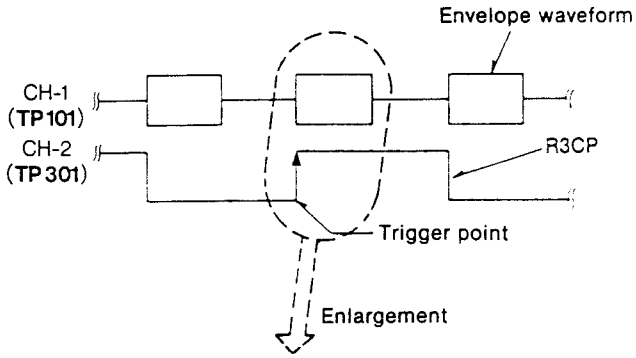

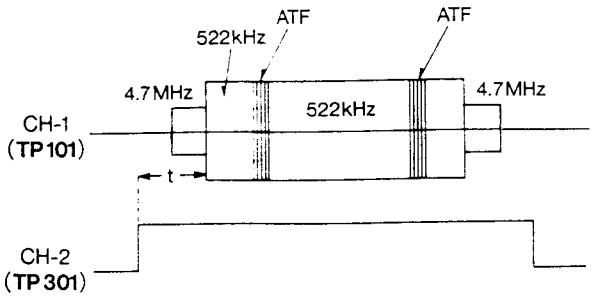

t: Value (μsec) indicated on the standard tape ±40μsec.

7. BOT/EOT Detection Sensitivity Verification and Adjustment

1. Make sure that the tape stops with the leader portion (the beginning and ending portion).

※ If the tape does not stop at the leader, make adjustment by following procedure outlined below.

①Insert a blank tape into the tape compartment of the set and press the playback button at the end of the tape.

②Set up the oscilloscope and connect as shown below.

	CH-1	CH-2
Test point	**CN54** ⑥ (BOT/EOT) ⑨ (magnetic substance)	**CN58** ①
Volts/Div.	0.2V	0.2V
Time/Div.	2msec.	
Delay	——	
Trig.	CH-2	
AC-GND-DC	AC	DC
Adjustment point	**VR271**	

③Adjust the amplitude of waveform to less than **1V** at the magnetic substance and more than **4V** at the leader on **VR271**.

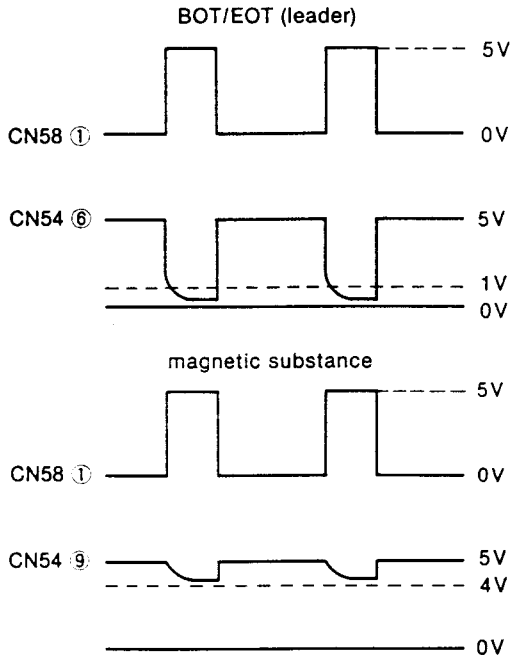

8. Linearity Adjustment

CAUTION: ONLY THE POST ROLLERS ARE USED FOR THE LINEARITY ADJUSTMENT. DO NOT ADJUST THE GUIDE ROLLERS.
THIS ADJUSTMENT IS VERY CRITICAL AND AFFECTS COMPATIBILITY WITH OTHER DAT RECORDERS.

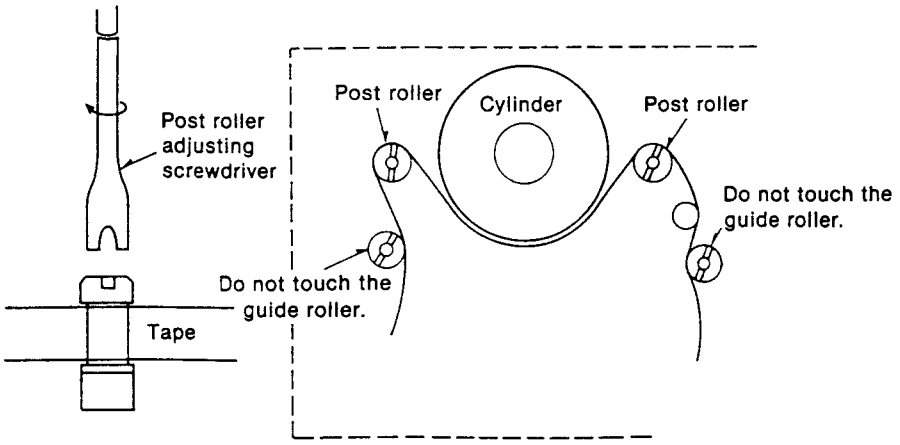

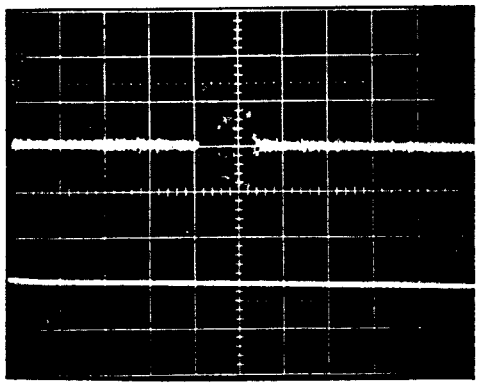

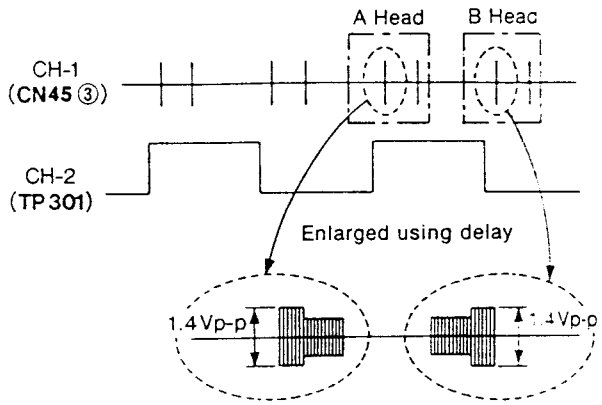

5. DAC Output Balance Adjustment

1. Load a blank tape for recording.
2. Use a signal generator to feed a 1kHz signal to ANALOG IN.
3. Set the recorder to the record mode and adjust **INPUT VR** so that the level meter moves to **−20dB**.
4. Adjust **VR501** (Lch) and **VR502** (Rch) to minimize the distortion rate. (Reference distortion rate of about 0.05%)
5. After adjustment, check that the playback output is **−20dB±0.2dB** with respect to 0dB at 1kHz.

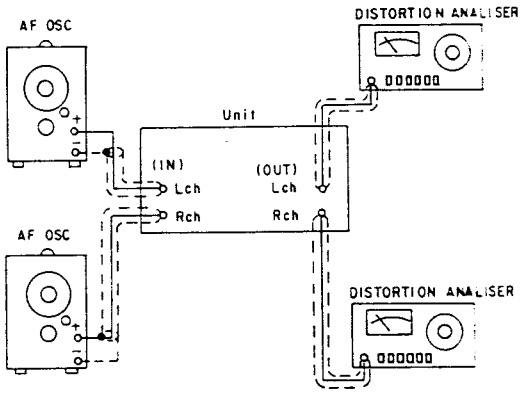

6. DAC Offset Adjustment

1. Set the recorder to DIGITAL IN in the stop mode.
2. Connect a digital voltmeter to **TP501** (Lch) and **TP502** (Rch).
3. Adjust **VR503** (Lch) and **VR504** (Rch) so that the voltage at the test point above is **0±1mV**.

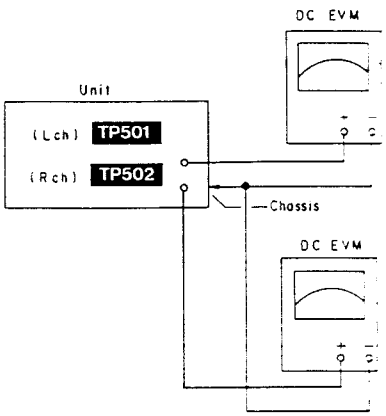

■ TERMINAL FUNCTION OF IC'S

• IC101 (AN7030SE2): RF AMP.

Pin No.	Mark	I/O Division	Function
1	V_{CC} 1	I	Power supply terminal
2	ACH FB	O	Playback feed back signal (Ach)
3	ACH IN	I	Playback amp. signal (Ach)
4	GND 1	—	GND terminal
5	BCH IN	I	Playback amp. signal (Bch)
6	BCH FB	O	Playback feed back signal (Bch)
7	AREC PCM	I	RF recording level adj. terminal
8	AREC PLT		
9	AREC ATF		
10	BREC ATF		
11	BREC PLT		
12	BREC PCM		
13	REC CNT 1	I	Track pitch signal
14	REC CNT 2	I	ATF area det. signal
15	SRRF IN	I	Recording signal
16	GND 2	—	GND terminal
17	VREF	O	Reference voltage terminal (Not used, open)
18	AREC OUT	O	Recording signal (Ach)
19	BREC OUT	O	Recording signal (Bch)
20	BTL REC	O	Recording control signal
21	V_{CC} 2	I	Power supply terminal
22	REC ON	O	Recording drive terminal (REC: "H")
	PLAY ON	O	Playback drive terminal (PLAY: "H")

Pin No.	Mark	I/O Division	Function
24	HSW	I	Head switching signal
25	AR/RSEL	I	Not used, connected to power supply
26	R/PSEL	I	Recording/playback select signal (REC: "H", PLAY: "L")
27	EQ OUT	O	Equalization signal
28	EQ IN 3	I	Equalization amp. signal
29	EQ IN 2		
30	EQ IN 1		
31	BF REQ	I	Equalization amplitude drive terminal (Bch)
32	B PHASE	I	Equalization phase drive terminal (Bch)
33	B GAIN	I	Equalization gain drive terminal (Bch)
34	AF REQ	I	Equalization amplitude drive terminal (Ach)
35	A PHASE	I	Equalization phase drive terminal (Ach)
36	A GAIN	I	Equalization gain drive terminal (Ach)
37	SV RF	O	Playback signal
38	GND 3	—	GND terminal
39	A INT	I	Playback amp. signal (Ach)
40	B INT	I	Playback amp. signal (Bch)
41	B INT IN	O	Playback amp. signal (Bch)
42	A INT IN	O	Playback amp. signal (Ach)

1. Connect and set up the oscilloscope as follows:

	CH-1	CH-2
Test point	**CN45 ③ (PILOT)**	**TP301 (R3CP)**
Volts/Div.	0.2V	2.0V
Time/Div.	Ⓐ 5msec. Ⓑ 1msec. Ⓒ 0.2msec.	
Delay Time/Div.	——	
Trig.	CH-2	
AC-GND-DC	AC	DC
Adjustment point	**Post rollers (only)**	

Ⓐ

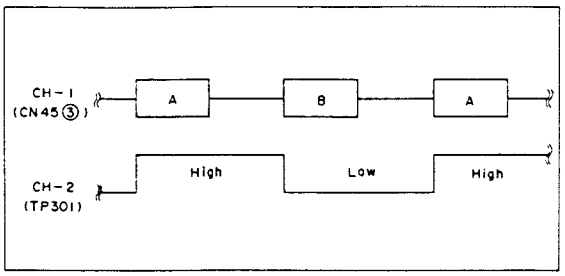

Ⓑ

(OK)

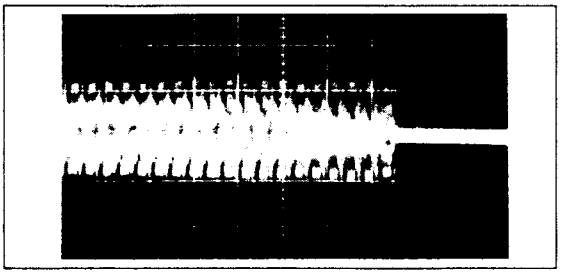

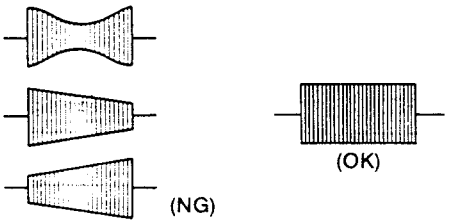

2. Load and play the linearity adjustment tape (RD-LR02). Please use the recorded signal portion on tape (after 600 count from begining of tape)
3. Use the leading edge of the CH-2 (R3CP) waveform to trigger the oscilloscope to monitor the head "A" side of the RF signal envelope.
4. While the tape is playing, gradually adjust the height of the POST ROLLERS until the RF envelope (B) is rectangular.

CAUTION 1:
ADJUSTMENTS MUST BE MADE VERY GRADUALLY.

CAUTION 2:
DO NOT "OVER ADJUST" the POST ROLLERS. It is unlikely that the POST ROLLERS will require more than a QUARTER of a turn in either direction to make the waveform rectangular.

5. Adjust **VR107** so that the amplitude (V_0) of the PILOT waveform Ⓒ is **1.0Vp-p**.

6. On the PILOT signal waveform Ⓒ, verify that the amplitude difference between adjacent tracks falls **within 200mV** (See figure below). If not, adjust the post rollers.

7. Play the standard test tape (RD-ER01), and do "PG Phase adjustment" and "ATF gain adjustment" again.

Ⓒ

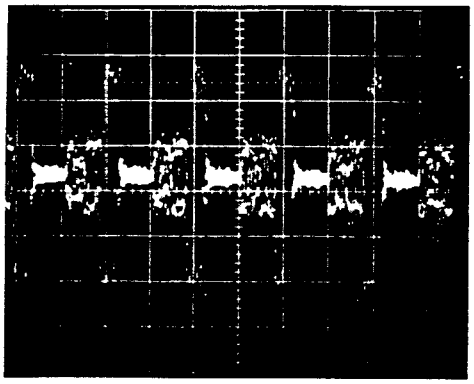

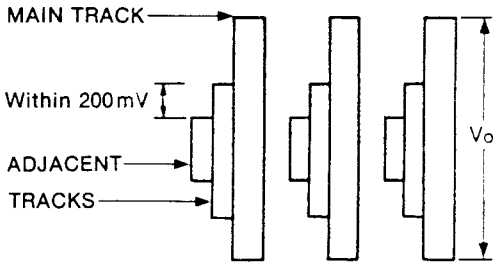

• IC201 (MN6742SDR): Servo processor

Pin No.	Mark	I/O Division	Function
1	OP10A	O	Cylinder rotative stop signal
2	SCK	I	Serial clock signal
3	SDA	I/O	Serial data signal
4	OSC 1	I	System clock (8MHz) signal
5	OSC 2	O	
6	NRST	I	Reset signal
7	NC	—	Not connection
8	OP20A	O	SSP ready signal
9	NC	—	Not connection
10	V_{SS}	—	GND terminal
11	VHS	—	Not used, open
12	OP 101	O	CAPFG/RLFGT select signal
13	TP 2	O	R3CP/RLFGT select signal
14	TP 3	I	PLL off-set/parallel data signal
15	TP 4		
16	TP 5		
17	TP 6		
18	TP 7	I	PLL off-set/data effective flag terminal
19	TP 8	I	Not used, connected to power supply
20	MOS	I	Serial port/strobe signal
21	TST	I	Test mode terminal (Normal, connected to GND)
22	ENC	—	Connected to GND terminal
23	NC	—	Not connection
24	NC		
25	V_{DD}	I	Power supply terminal
26	NC	—	Not connection
27	RSW	—	Not used, open
28	HAS	O	A/D input select signal
29	IVM	—	Not used, connected to GND
30	VLP	—	Not used, open
31	STM	I	R3TU or RLFGT (64 P/R) signal
32	STR	I	Comparator reference signal of STM input

Pin No.	Mark	I/O Division	Function
33	CAE	O	Capstan velocity control signal
34	CYE	O	Cylinder velocity control signal
35	END	I	VREF or ATFTER voltage signal
36	VSY	I	$\overline{\text{CYLPG}}$ signal
37	ASH 1	I	Capstan FG or RLFGT signal after EXOR
38	NC	—	Not connection
39	AFB 1	O	Inverter amp. signal of ATFTER input (Not used, open)
40	NC	—	Not connection
41	AFG 1	I	ATF tracking error voltage terminal
42	ASH 2	O	Not used, connected to GND
43	AFB 2	O	Not used, open
44	NC	—	Not connection
45	AFG 2	I	Reference voltage terminal
46	VDA	I	Power supply terminal
47	VSA	—	GND terminal
48	ORE	O	Reference voltage terminal
49	IRE	I	
50	GND	—	GND terminal
51	IPL	O	Not used, open
52	NC	—	Not connection
53	CLP	I	Not used, connected to GND
54	CP 1	O	Not used, open
55	CP 2	I	Supply reel FG signal
56	NC	—	Not connection
57	NC		
58	CN 1	O	Not used, open
59	CN 2	I	Not used, connected to GND
60	CTL	O	Not used, open
61	PFG	I	Cylinder FG signal
62	PGM	I	Not used, connected to GND
63	CUL	O	Capstan rotative direction signal
64	NC	—	Not connection

• **IC202 (MN53020SDQ): ATF**

Pin No.	Mark	I/O Division	Function
1	NSNC	O	SYNC det. monitor terminal
2	SVAL	I	ATF select terminal
3	PCMOK	I	PCM playback monitor terminal
4	SPE	O	Starting pulse of counter track lock
5	SP 2	O	Sampling pulse signal for pilot signal of adjacent track
6	SP 1		
7	DCYLPG	I	Cylinder PG signal
8	DCAPFG 1	I	Capstan FG signal
9	DCAPFG 2		
10	DRLFGT	I	Take-up reel FG signal
11	DCYLFG	I	Cylinder FG signal
12	SYNC	I	ATF sync. det. terminal
13	NRST	I	Reset signal
14	R3CP	I	Timing signal for RF envelope signal control
15	ENVT		
16	FCH	I	System clock signal (9.408 MHz)
17	V_{DD}	I	Power supply terminal
18	V_{SS}	—	GND terminal
19	MODE 1	I	SYNC det. select terminal (Not used, connected to GND)
20	HFCH	I	Clock signal for PLL off-set data
21	PLLOFS	I	PLL off-set data signal

Pin No.	Mark	I/O Division	Function
22	TEST 6	—	Not used, connected to GND
23	P MODE	I	Pulse width select terminal (Not used, open)
24 ∫ 28	TEST 1 ∫ TEST 5	I	Test terminal (Not used, connected to GND)
29	SPHT	—	Not used, open
30	HSWS	O	Head switching signal (33.33 Hz)
31	HSWR		
32	SEL A	I	CAPFGTU signal select terminal
33	SEL B	I	R3TU signal select terminal
34	PLL 0	O	Output signal after decoded 4 bit parallel data of PLLOFS
35	PLL 1		
36	PLL 2		
37	PLL 3		
38	MODE 2	—	Not used, open
39	V_{SS} 2	—	GND terminal
40	V_{DD} 2	I	Power supply terminal
41	R3TU	O	Building-up edge signal of R3CP/DRLFGT
42	CAPFGTU	O	Capstan FG signal/Take-up reel FG signal
43	CAPER	O	Capstan rotative direction control signal
44	NLNR	O	Track linearity monitor terminal

• **IC203 (AN8320NFA): Linear servo**

Pin No.	Mark	I/O Division	Function
1	FG1 AO	O	Capstan FG signal
2	FG1 AI	I	Capstan FG (−) signal
3	FG1 FI	I	Frequency characteristic setting terminal
4	CYL PG	O	Cylinder PG signal
5	PGVR	I	PG delay time adj. terminal
6	CYPGI	I	PG schmidt comparator terminal
7	GND	—	GND terminal
8	SVRF	I	ATF terminal
9	CPD	—	Det. capacity connection terminal
10	CCI	O	Full-wave rectification buffer terminal
11	CCO	I	Clamp circuit terminal
12	SP 1	I	SP 1 terminal
13	SP 2	I	SP 2 terminal
14	VSPE	I	SPE setting terminal
15	SPE	I	SPE terminal
16	CSH	I	Hold capacity connection terminal
17	ATFTER	O	ATF control command signal
18	CFB	—	Phase compensation terminal
19	V_{CC}	I	Power supply terminal
20	ATFON	I	ATF ON terminal (Not used, connected to power supply)
21	PTBIA	—	Photo-transistor bias terminal (Not used, open)
22	VREF	O	Reference voltage terminal
23	LEDR 1	I	Bias voltage terminal
24	LEDH 1	—	Constant current terminal (Not used, open)
25	LEDR 2	I	Bias voltage terminal

Pin No.	Mark	I/O Division	Function
26	LEDH 2	—	Constant current terminal (Not used, open)
27	CYL FG	O	Cylinder FG signal
28	CYF GSI	I	Cylinder schmidt comparator terminal
29	CYF GAO	O	Cylinder op. amp. terminal
30	CYF GAI	I	Cylinder op. amp. (−) terminal
31	NST BY	I	STAND BY signal (Not used, connected to power supply)
32	TF GAI	I	Take-up reel op. amp. (−) terminal
33	TF GAO	I	Take-up reel op. amp. terminal
34	TF GSI	I	Take-up reel schmidt comparator terminal
35	RLFGT	O	Take-up reel FG signal
36	RLFGS	O	Supply reel FG signal
37	SF GSI	I	Supply reel schmidt comparator terminal
38	SF GAO	O	Supply reel op. amp. terminal
39	SF GAI	I	Supply reel op. amp. terminal
40	V_{CC}	I	Power supply terminal
41	FG 2FI	—	Frequency characteristic setting terminal
42	FG 2AI	I	Capstan FG (−) signal
43	FG 2AO	O	Capstan FG signal
44	FG 2SI	I	Captan FG schmidt comparator terminal
45	CPFG 2	O	Capstan FG signal
46	FILSLD	I	Frequency characteristic $\overline{\text{DOWN}}$ terminal
47	CPFG 1	O	Capstan FG signal
48	FG 1SI	I	Capstan FG schmidt comparator terminal

• IC102 (AN7035SCE2): Playback PLL

Pin No.	Mark	I/O Division	Function
1	LPF	O	Buffer amp. 1 reference terminal
2	GND 1	—	GND terminal
3	ENVC	O	ENV time constant setting terminal
4	ENVR	I	ENV threshold voltage adj. terminal
5	RFENV	O	RF envelope signal
6	RSENVC	O	RSENV time constant setting terminal
7	RSRF	I	RF signal
8	DELOUT	O	RF signal
9	DELIN 1	I	Delay (45°) signal
10	DELIN 2	I	Delay (90°) signal
11	PDOUT	O	Phase comparator signal
12	VREF	I	V/I converter reference voltage terminal
13	VCOV	I	OSC frequency control terminal
14	R/P	I	Recording/playback select terminal (Not used, connected to GND)
15	VCOR	I	PLL free run adj. terminal

Pin No.	Mark	I/O Division	Function
16	V_{CC} 1	I	Power supply terminal
17	VCOC 1	O	VCO terminal
18	VCOC 2	O	VCO terminal
19	V_{CC} 2	I	Power supply terminal
20	PLL CP 1	O	Clock (2CK) signal (Not used, open)
21	PLL CP 2	O	Clock (CK) signal
22	DEMCOD	O	NRZI demodulated signal for playback signal with PLL
23	SVSYNC	O	ATF sync. signal
24	GND 2	—	GND terminal
25	OP OUT 3	O	ATF 3 signal
26	OP IN 3	I	ATF 3 signal
27	OP OUT 2	O	ATF 2 signal
28	OP IN 2	I	ATF 2 signal
29	OP OUT 1	O	ATF 1 signal
30	OP IN 1	I	ATF 1 signal
31	VREF	I	Reference voltage terminal
32	SYNC IN	I	Output amp. 1 (+) signal

• IC405 (AK5326-VP): A/D converter

Pin No.	Mark	I/O Division	Function
1	AGND	—	Analog GND terminal
2	AINL	I	L ch analog signal input terminal
3	ZEROL	I	L ch zero level input terminal
4	VA+	I	Analog power supply terminal
5	VA−	I	Analog power supply terminal
6	APD	I	Analog power down terminal
7	ACAL	I	Analog calibration terminal
8	NC	—	Not connected
9	DCAL	O	Digital calibration terminal
10	DPD	I	Digital power down terminal
11	TST 1	I	Test terminal (Connected to GND)
12	TST 2		
13	TST 3		
14	L/$\overline{R}$	I	Input channel select terminal

Pin No.	Mark	I/O Division	Function
15	SCLK	I	Serial data output clock terminal
16	SDATA	O	Serial data output terminal
17	VD1+	I	Digital power supply terminal
18	VD2+		
19	DGND	—	Digital GND terminal
20	DCLKA	I	Digital system clock terminal
21	NC	—	Not connected
22	ACLKA	O	Analog system clock terminal
23	CLKIN	I	Master clock terminal
24	LGND	—	Digital GND terminal
25	VL+	I	Digital power supply terminal
26	ZEROR	I	R ch zero level input terminal
27	AINR	I	R ch analog signal input terminal
28	VREF	O	Reference voltage terminal

• IC301 (MN188161SDM): System control

Pin No.	Mark	I/O Division	Function
1	V_{DD}	I	Power supply terminal
2 ~ 9	P 67 (SPDT 7) ~ P 60 (SPDT 0)	I/O	Signal processor transfer address and data bus terminal
10	P 57 (SPRDY)	I	Signal processor data transfer command signal
11	P 56 (PBLANK)	I	Blank skip select ("H": no skip, "L": skip)
12	P 55 (R3CP)	I	Frame sync. signal
13	P 54 (PMID6B)	I	Main ID6 select terminal
14	P 53 (PMID6A)		
15	P 52	I	Not used, connected to resistor
16	P 51	I	Not used, connected to resistor
17	P 50 (PDIOSEL)	I	D I/O select terminal ("H": AES/EBU, "L": IEC)
18	EXI	—	Not used, connected to GND
19	EXO	—	Not used, open
20	NRST 1	I	Reset signal ("L": RESET)
21	P 47 (NSERVRST)	O	Reset signal to servo block
22	P 46	—	Not used, open
23	P 45	—	
24	P 44	—	
25	P 43 (SLAD)	O	DIGITAL IN PLL/crystal select terminal ("L": PLL, "H": crystal)
26	P 42 (XCK32)	O	32kHz OSC control ("H": OSC, "L": STOP)
27	P 41 (XCK44)	O	44.1kHz OSC control ("H": OSC, "L": STOP)
28	P 40 (XCK48)	O	48kHz OSC control ("H": OSC, "L": STOP)
29	P 27 (NPRDY)	I	Transfer ready signal from panel control
30	OSC 1	I	Crystal OSC terminal
31	OSC 2	O	
32	V_{SS}	—	GND terminal
33	XI	—	Not used, open
34	XO	—	
35	P 26	—	Not used, connected to power supply
36	P 25 (RF ENV)	I	RF envelope signal

Pin No.	Mark	I/O Division	Function
37	P 37 (FLGCLK)	O	Clock signal of flag counter
38	P 36 (FLGDT)	O	Data signal of flag counter
39	P 35 (TP)	O	Track pitch signal ("L") (Not used, open)
40	P 34 (UNLOCK)	O	DIGITAL-IN PLL unlock signal ("L": det.)
41	P 33	—	Not used, open
42	P 32 (DISCHG)	O	DIGITAL-IN PLL discharge signal
43	P 31 (DINPLINH)	O	DIGITAL-IN PLL prohibition signal ("H": prohibition)
44	P 30 (ANRST)	O	Reset signal ("H": RESET) to DAC
45	P 21 (HSW)	I	Head switching pulse signal
46	P 20 (NMRDY)	I	Transfer command signal from mechanism control
47	P 01	—	Not used, open
48	P 00	—	
49	P 17 (PTXD)	O	Serial data transmission terminal
50	P 16 (PRXD)	I	Serial data reception terminal
51	P 15 (PCLK)	O	Serial data transmission/ reception clock signal
52	P 14	—	Not used, open
53 ~ 56	P 13 (MDT 3) ~ P 10 (MDT 0)	I/O	Transfer data bus of mechanism control
57	P 77	—	Not used, open
58	P 76 (NDEMP)	O	de-emphasis signal
59	P 75 (SGMTG)	O	Muting signal
60	P 74 (DOUTTH)	O	Digital out through select ("H": through)
61	P 73 (NRST 2)	O	Reset signal
62	P 72 (MSTB)	O	Transfer command terminal of mechanism control
63	P 71 (SPSTB)	O	Signal processor strobe signal
64	P 70 (SPAW)	O	Signal processor address setting signal

• IC271 (MN17541SDN2): Mechanism control

Pin No.	Mark	I/O Division	Function
1	NSBOA	I	Serial data signal
2	NRST	I	Reset signal
3	NSYNC	—	Not used, open
4	X 2		
5	X 1		
6	V_{SS}	—	GND terminal
7	OSC 2	O	Clock signal
8	OSC 1	I	
9	V_{DD}	I	Power supply terminal
10	NTC1B	I	Supply reel FG signal
11	NIRQ 0	I	Take-up reel FG signal
12	NIRQ 1	I	Transfer strobe signal of system control
13	P00 (MSTB)		
14	P 01 (MRDY)	O	Transfer ready signal of system control
15	P 02 (NSSTB)	O	Transfer strobe signal
16	P 03 (NSRDY)	I	Transfer ready signal
17	P 10 (ATFGT)	O	ATF gain (× 1/2) select terminal
18	P 11 (REWGT)	O	REW FG • PG gain select terminal
19	P 12 (LPMOD)	—	Not used, open
20	P 13 (MODMT0)	O	Mode motor control signal
21	P 20 (MODMT1)		
22	P 21 (MODMT2)		
23	P 22	—	Not used, open
24	P23 (PLG)	O	Plunger control signal
25	P 30	—	Not used, open
26	P 31		
27	P 32 (LOAD 1)	O	Tray motor control (+) terminal
28	P 33 (LOAD 2)	O	Tray motor control (−) terminal
29	P 40	—	Not used, open
30	P 41 (DEW)	I	Dew sensor det. signal
31	P 42 (EOT)	I	Tape end det. signal
32	P 43 (BOT)	I	Tape begin det. signal
33	P 50 (OPEN)	I	Cassette open det. signal

Pin No.	Mark	I/O Division	Function
34	P 51 (CLOSE)	I	Cassette close det. signal
35	P 52 (LOAD S)	I	Loading start det. signal
36	P 53 (LOAD E)	I	Loading stop det. signal
37	P 60 (SW 2)	O	Test terminal (Not used, open)
38 ∫ 40	P 61 (MMOD 0) ∫ P 63 (MMOD 2)	I	Tape mode det. signal
41 ∫ 44	P 70 (MBUS 0) ∫ P 73 (MBUS 3)	I	Transfer bus terminal of system control
45	P 80 (RCC)	—	Not used, open
46	P 81 (FIL)	O	FILTER select signal
47	P 82 (ATFON)	—	Not used, open
48	P 83 (NSTBY)	—	Not used, open
49	P 90 (NSRST)	O	Reset signal
50	P 91 (LEDDRV)	O	Tape begin/end LED control signal
51	P 92 (PCMOK)	I	PCM playback det. signal
52	P 93 (SVAL 0)	I	ATF effective position setting terminal
53	NEXPS	I	Not used, connected to power supply
54	PA 0 (NSNCOK)	I	ATF sync. det. terminal
55	PA 1 (NLNOK)	I	Track linearity det. terminal
56	PA 2 (CAPER)	I	Capstan rotative direction command signal
57	PA 3	—	Not used, open
58	PB 0 (TH 1)	I	Tape hall det. signal
59	PB 1 (TH 2)		
60	NSBTB	I	Muting det. signal
61	NSBIB	I	Test terminal (Not used, open)
62	NSBOB		
63	NSBTA (SCLK)	O	Serial transfer clock signal
64	NSBIA (SDAT)	I/O	Serial transfer data signal

Pin No.	Mark	I/O Division	Function
79	SPDT 7	I/O	Address and data bus terminal
80	SPDT 6		
81	SPDT 5		
82	SPDT 4		
83	SPDT 3		
84	SPDT 2		
85	SPDT 1		
86	SPDT 0		
87	V_{SS}	—	GND terminal
88	TEST 4	—	Not used, connected to GND
89	V_{DD}	I	Power supply terminal
90	SPAW	I	Signal processor address setting terminal
91	SPSTB	I	Signal processor strobe signal
92	SPRDY	O	Data transfer command signal
93	UNLOK	O	PLL unlock signal
94	DISYND	—	Not used, open
95	NSTBY	I	Not used, connected to power supply
96	NRST	I	Reset signal
97	M7CK	—	Master clock signal (Not used, open)
98	R6CP/ (ENVT)	O	Timing signal for RF envelope signal control
99	R3CP		
100	V_{SS}	—	GND terminal
101	SRRF	O	Recording signal

Pin No.	Mark	I/O Division	Function
102	V_{DD}	I	Power supply terminal
103	SRPR	O	Recording/playback select signal (REC: "H", PLAY: "L")
104	SRWND 2	O	ATF area det. signal
105	SRWND 1	O	Track pitch signal
106	PBDT	I	Playback signal
107	PBCK	I	Playback envelope signal
108	RFMSK	O	Not used, open
109	PLLOFS	O	PLL off-set information signal
110	HFCH	O	System clock signal
111	VFPLFS	O	PLL OFS effective information signal
112	EXFCH	—	Not used, connected to GND
113	EEMD	—	Not used, connected to GND
114	V_{SS}	—	GND terminal
115	SL NRZI	—	Not used, connected to GND
116	SELF CH0		
117	SELF CH1		
118	V_{DD}	I	Power supply terminal
119	M9CP	O	Master clock signal
120	HSW	I	Head switching signal
121	NR TRST	—	Not used, connected to power supply
122	SUBWND	—	Not used, open
123	IPF	O	Output terminal for flag counter
124	SUBC 1		

• IC501 (YM3404B): Digital filter

Pin No.	Mark	I/O Division	Function
1	SHL	O	1 DAC (ST="L"): Lch Deglitcher signal 2 DAC (ST="H"): L/Rch Deglitcher signal
2	X 0	O	Clock output (Not used, open)
3	X 1	I	Clock input
4	VDD 2	I	Power supply terminal
5	BCI	I	Bit clock signal
6	SDSY	I	R/L signal
7	SDI	I	Data input
8	VDD	I	Power supply terminal

Pin No.	Mark	I/O Division	Function
9	DLO	O	1 DAC (ST="L"): L/Rch data output terminal 2 DAC (ST="H"): Lch data output terminal
10	RDO	O	Rch data output (Not used, open)
11	WCO	O	Output data word clock
12	BCO	O	Bit clock signal
13	VSS	—	GND terminal
14	ST	I	1 DAC/2 DAC selector terminal
15	FEN	I	System clock selector terminal
16	SHR	O	1 DAC (ST="L"): R ch deglitch signal

• IC351 (MN6624): Digital signal processor

Pin No.	Mark	I/O Division	Function
1	PCMCIF	O	Flag counter terminal
2	IDPP		
3	IDP	O	Test terminal
4	V_{DD}	I	Power supply terminal
5	TESTS	—	Not used, connected to GND
6	V_{SS}	—	GND terminal
7	CKIO FS	—	Not used, open
8	CKIO 128	O	Test terminal
9	CKIO 512	—	Not used, open
10	NDALOAD	—	Not used, open
11	DADAT	O	DA data signal
12	DALRCK	O	LR discrimination signal
13	DABCK	O	Serial bit clock signal
14	DAMCK	—	Not used, open
15	V_{DD}	I	Power supply terminal
16	TEST 6	—	Not used, open
17	V_{SS}	—	GND terminal
18	ADDAT	I	AD data signal
19	ADLRCK	O	LR discrimination signal (Not used, open)
20	ADBCK	O	Serial bit clock signal
21	ADMCK	O	External clock signal (Not used, open)
22	TX	O	Digital signal
23	RX	I	
24	VCOS L32	—	Not used, open
25	VCOS L44		
26	VCOS L48		
27	DIO REF	O	Digital signal (PLL control)
28	DIO VAR	O	
29	V_{DD}	I	Power supply terminal
30	DI 512	I	Digital signal (512FS)
31	V_{SS}	—	GND terminal
32	XO 4	—	Not used, open
33	XI 4	I	Crystal terminal (32kHz×512)
34	TEST 0	—	Not used, connected to GND
35	XO 3	—	Not used, open
36	XI 3	I	Crystal terminal (44.1kHz×512)
37	TEST 1	—	Not used, connected to GND
38	XO 2	—	Not used, open
39	XI 2	I	Crystal terminal (48kHz×512)

Pin No.	Mark	I/O Division	Function
40	V_{DD}	I	Power supply terminal
41	XO 1	O	Crystal OSC terminal
42	XI 1	I	
43	V_{SS}	—	GND terminal
44	PC OUT	—	Not used, open
45	RAD 0	O	RAM address bus termainal
46	RAD 1		
47	RAD 2		
48	RAD 3		
49	RAD 4		
50	RAD 5		
51	RAD 6		
52	RAD 7		
53	V_{DD}	I	Power supply terminal
54	TEST 2	—	Not used, connected to GND
55	V_{SS}	—	GND terminal
56	RAD C	O	RAM address bus terminal
57	RAD E		
58	NWE	O	Write enable for memory
59	RAD D	O	RAM address bus terminal
60	RAD 8		
61	RAD 9		
62	RAD B		
63	NOE	O	Output enable for memory
64	RAD A	O	RAM address bus terminal
65	V_{DD}	I	Power supply terminal
66	NCS	O	Chip select terminal for memory
67	V_{SS}	—	GND terminal
68	RDT 7	I/O	RAM data bus terminal
69	RDT 6		
70	RDT 5		
71	RDT 4		
72	RDT 3		
73	RDT 2		
74	RDT 1		
75	RDT 0		
76	V_{SS}	—	GND terminal
77	TEST 3	—	Not used, connected to GND
78	V_{DD}	I	Power supply terminal

• **IC601 (M50754-165FP): Panel control & FL drive**

Pin No.	Mark	I/O Division	Function
1	V_{SS}	—	GND terminal
2	P 27	O	Input select signal (DIGITAL↔ANALOG)
3	P 26	O	LED display drive terminal (PAUSE)
4	P 25	O	LED display drive terminal (REC)
5	P 24	O	LED display drive terminal (PLAY)
6 ∫ 8	P 23 ∫ P 21	I	Key return signal
9	P 20	O	Buffer control signal (Not used, connected to GND)
10	NC	—	Not connection
11	NPRDY	O	Ready signal
12	NTRCLK	I/O	Serial data transmission/ reception clock signal
13	RXD	O	Serial data transmission signal
14	TXD	I	Serial data reception signal
15	P 33	—	Not connection
16	P 32	—	Connected to GND
17	P 31	O	LED display drive terminal (S. PLAY)
18	P 30	O	LED display drive terminal (A. PNO)
19	INT 1	I	Remote control signal
20	INT 2	I	Not used, connected to power supply
21	CNV_{SS}	—	GND terminal
22	RST	I	Reset signal ("L": RESET)
23	NC	—	Not connection
24	X IN	I	Master clock terminal (6MHz)
25	X OUT	O	
26	NC	—	Not connection
27	X CIN	—	Not used, connected to GND
28	X COUT	—	Not used, open
29	V_{SS}	—	GND terminal
30	NC	—	Not connection
31	P 57	I	Key return signal
32	P 56		

Pin No.	Mark	I/O Division	Function
33	P 55	I	Key return signal
34	P 54		
35	VP	I	Power supply terminal for FL drive
36	P 51	O	Segment signal for FL drive
37	P 50		
38 ∫ 45	P 17 ∫ P 10		
46	NC	—	Not connection
47	P 07	O	Segment signal for FL drive
48	P 06		
49	P 05		
50	P 04		
51	P 03		
52	P 02		
53	P 01		
54	P 00		
55	P 47		
56	P 46		
57	P 45		
58	P 44		
59	P 43		
60	P 42		
61	P 41		
62	P 40		
63	V_{CC}	I	Power supply terminal
64	V_{CC}		
65	V_{SS}	—	GND terminal
66	P 65	O	Digit signal for FL drive and key scan signal
67	P 64		
68	P 63		
69	P 62		
70	P 61		
71	P 60		
72	NC	—	Not connection

• IC502 (MN53010PEH): Serial/Parallel converter

Pin No.	Mark	I/O Division	Function
1	WCO	O	Output data word clock (DALO. DBLO, DARO, DBRO)
2	DARO	O	Rch data output, (+) terminal
3	DBRO	O	Rch data output, (−) terminal
4	RST	I	Reset terminal, input data to "0"
5	SVDD	I	Power supply terminal
6	SVSS	I	GND terminal
7	F2DAC	I	"H": 2DAC 18-bit "L": 2DAC 17-bit
8	FLOAT	I	"H": 4DAC 18-bit "L": 4DAC 17-bit
9	PHASE	I	"H": Phase inversion "L": Normal mode
10	LRCK	I	Inverter input
11	NLRCK	O	LRCK signal inverter output
12	SIN	I	Data input
13	WCI	I	Input data word clock
14	BCI	I	Input data bit clock
15	VSS	—	GND terminal
16	NC	—	Not connected
17	VDD2	I	Power supply terminal
18	SHR	I	Rch Deglitcher signal

Pin No.	Mark	I/O Division	Function			
19	SHL	I	Lch Deglitcher signal			
20 ∫ 31	NC	—	Not connected			
			NORMAL MODE delay: 180ms	TEST MODE delay: 1.45ms	TEST MODE delay: 0.73ms	TEST MODE delay: 0ms
32	NTEST 1	I	H	L	H	L
33	NTEST 2	I	H	H	L	L
34	NTEST 3	I	"H": Normal mode "L": Reset			
35	DALO	O	Lch data output, (+) terminal			
36	DBLO	O	Rch data output, (−) terminal			
37	VDD	I	Power supply terminal			
38	VSS2	—	GND terminal			
39	NC	—	Not connected			
40	GAIN	O	Gain selector signal {H: 0∼−12dB, L: below −12dB}			
41	SH	O	Deglitch signal {H: sample, L: Hold}			
42	BCO	O	Output data bit clock			

• IC503∼IC506 (PCM56P-J): D/A converter

Pin No.	Mark	I/O Division	Function
1	−VS	I	Power supply terminal
2	DG	—	GND terminal
3	+VL	I	Power supply terminal
4	NC	—	Not connection
5	CLK	I	Clock signal
6	LE	I	Latch enable control signal
7	DATA	I	Data signal
8	−VL	I	Power supply terminal
9	V OUT	O	Voltage output termial

Pin No.	Mark	I/O Division	Function
10	RF	O	Data signal
11	SJ	I	Operation amp. supply terminal
12	A • G	—	GND terminal
13	I OUT	O	Current output termial
14	MSB	I	MSB adj. terminal (Not used, open)
15	R IN	—	Not used, open
16	+VS	I	Power supply terminal

■BLOCK DIAGRAM

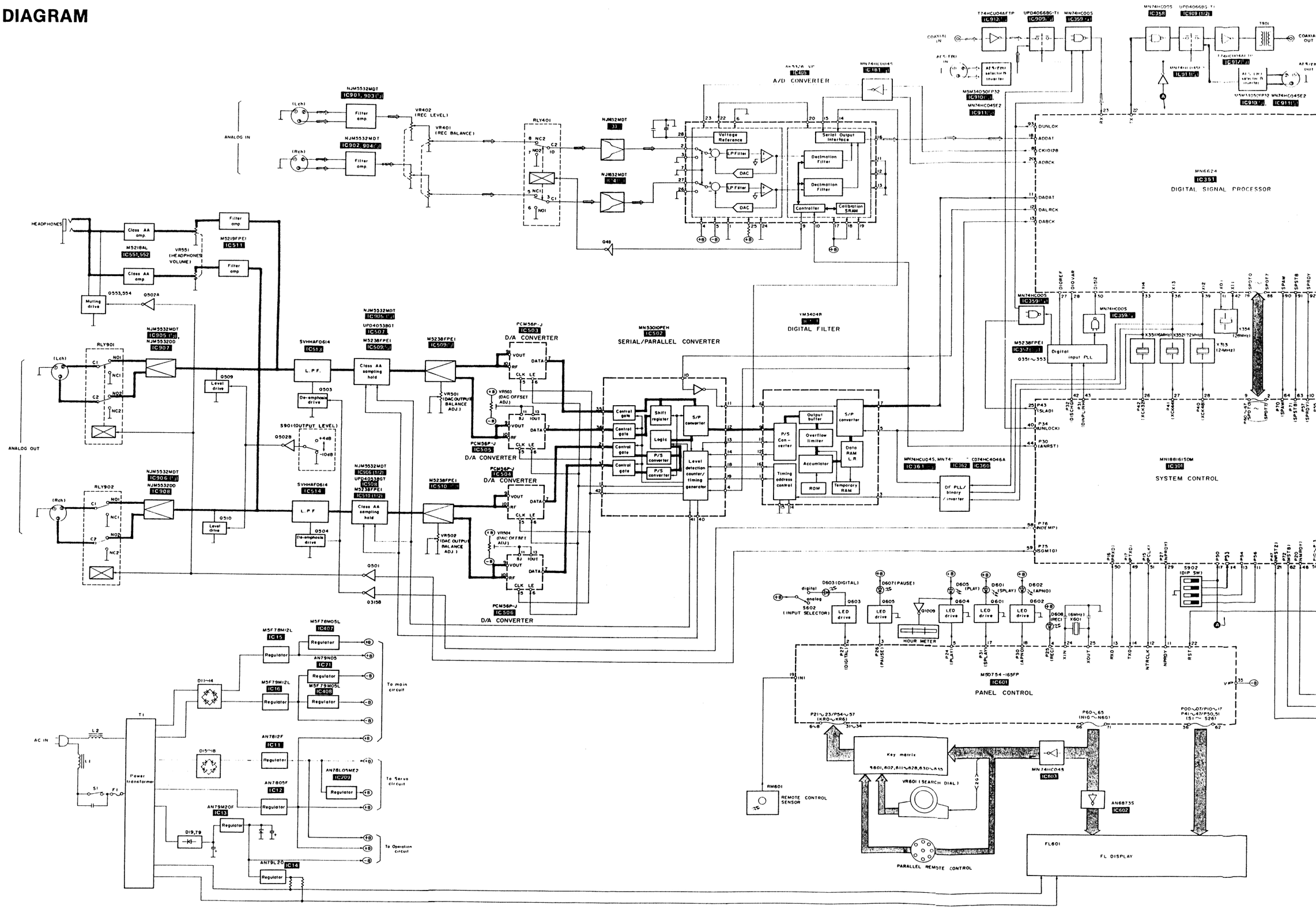

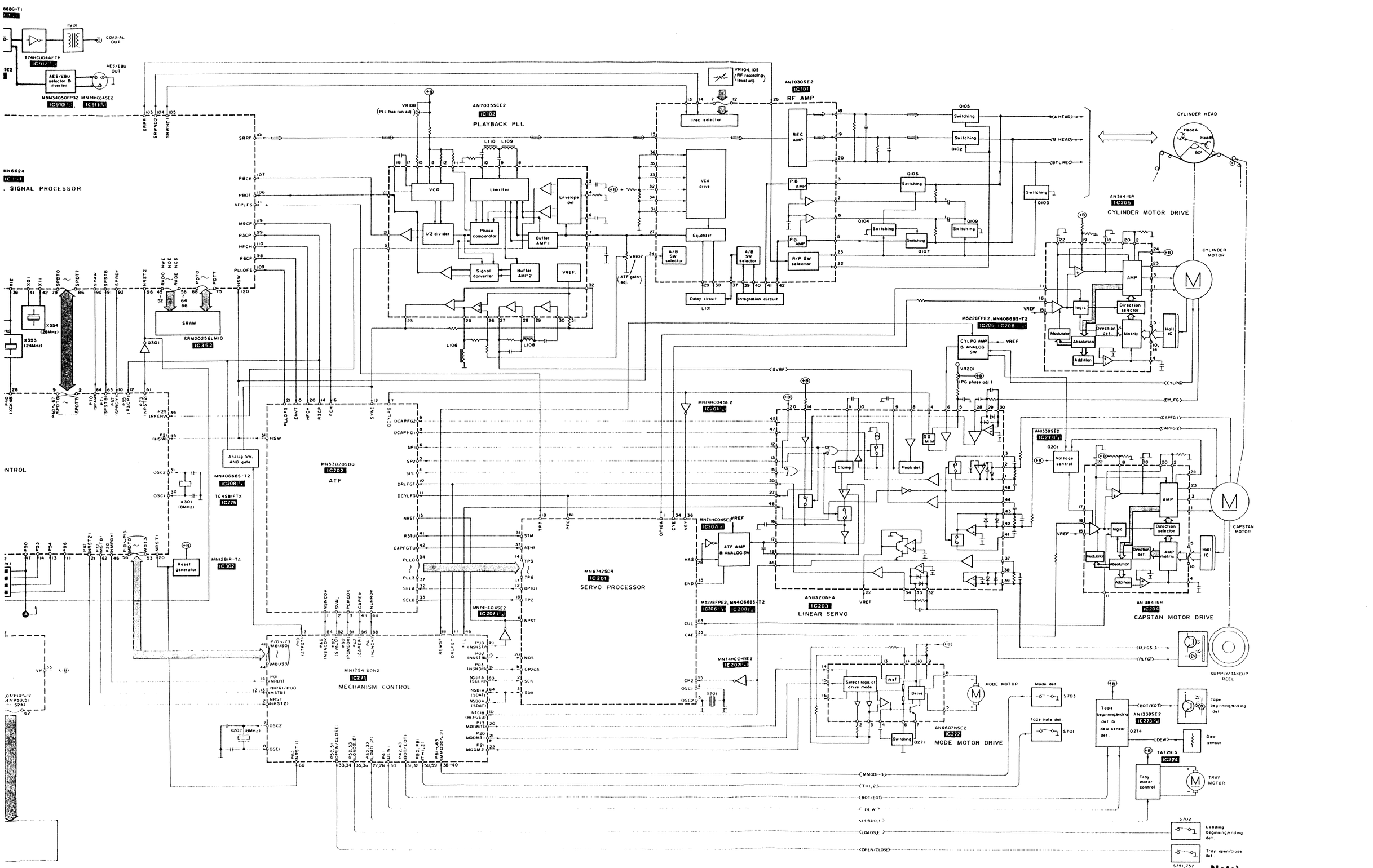

INTERNAL CONNECTION OF FL

- **Grid assignment diagram**

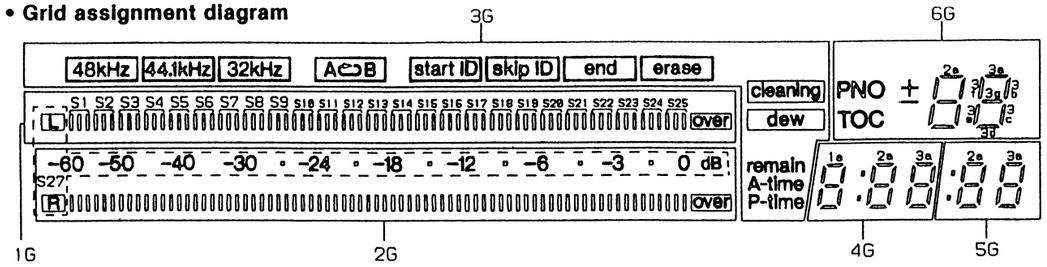

- **Anode connection table**

	1G	2G	3G	4G	5G	6G
S1	▌▌▌	▌▌▌	48KHz	-	-	-
S2	▌▌▌	▌▌▌	44.1KHz	-	-	-
S3	▌▌▌	▌▌▌	32KHz	-	-	-
S4	▌▌▌	▌▌▌	A	1a	-	-
S5	▌▌▌	▌▌▌	⊂⊃	1b	-	-
S6	▌▌▌	▌▌▌	B	1f	-	-
S7	▌▌▌	▌▌▌	start ID	1g	-	PNO
S8	▌▌▌	▌▌▌	skip ID	1c	-	TOC
S9	▌▌▌	▌▌▌	end	1e	-	+
S10	▌▌▌	▌▌▌	erase	1d	-	–
S11	▌▌▌	▌▌▌	-	col,1	col,2	-
S12	▌▌▌	▌▌▌	-	2a	2a	2a
S13	▌▌▌	▌▌▌	cleaning	2b	2b	2b
S14	▌▌▌	▌▌▌	dew	2f	2f	2f
S15	▌▌▌	▌▌▌	-	2g	2g	2g
S16	▌▌▌	▌▌▌	remain	2c	2c	2c
S17	▌▌▌	▌▌▌	A-time	2e	2e	2e
S18	▌▌▌	▌▌▌	P-time	2d	2d	2d
S19	▌▌▌	▌▌▌	-	-	-	-
S20	▌▌▌	▌▌▌	-	3a	3a	3a
S21	▌▌▌	▌▌▌	-	3b	3b	3b
S22	▌▌▌	▌▌▌	-	3f	3f	3f
S23	▌▌▌	▌▌▌	-	3g	3g	3g
S24	▌▌▌	▌▌▌	-	3c	3c	3c
S25	▌▌▌	▌▌▌	-	3e	3e	3e
S26	over	over	-	3d	3d	3d
S27	L	R -60~0 dB	-	-	-	-

- **Pin connection**

PIN NO.	55	54	53	52	51	50	49	48	47	46	45	44	43	42	41
CONNECTION	F2	F2	NP	NP	S1	S2	S3	S4	S5	S6	S7	S8	S9	S10	S11

PIN NO.	40	39	38	37	36	35	34	33	32	31	30	29	28	27	26	25	24	23	22	21	20	19	18	17	16	15	14	13	12	11	10	9	8	7	6	5	4	3	2	1
CONNECTION	S12	S13	S14	S15	S16	S17	S18	S19	S20	S21	S22	S23	S24	S25	S26	S27	NP	NP	NP	NP	NP	NP	NP	NP	NP	NP	NP	NP	NP	NP	1G	2G	3G	4G	5G	6G	NP	NP	F1	F1

Note 1.)NP..... No pin.
2.)F1,F2..... Filament
3.)1G~6G..... Grid.

TERMINAL GUIDE OF IC'S, TRANSISTORS AND DIODES

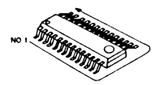

TC4S81FTX	5 pin	AN3841SR	24 pin
M5219FPE1 M5238FPE1 NJM5532MDT	8 pin	AN6607NSE2 MN74HC163S M5M34050FTP2 µPD4053BGT	16 pin
AN1339SE2 MN74HC04S MN74HC04SE2 MN74HCU04S MN4066BS-T2 MN74HC00S T74HCU04AFTP µPD4066BG-T1 M5228FPE2	14 pin	AN6873S	18 pin
		SRM20256LM10	28 pin
		AN7035SCE2	32 pin
		AN7030SE2	42 pin

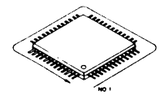

MN53010PEH	42 pin
AN8320NFA	48 pin
MN6742SDR MN17541SDN2	64 pin
M50754-165FP	72 pin
MN53020SDQ	44 pin
MN6624	124 pin

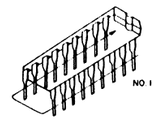

NJM5532DD	8 pin
CD74HC4046A PCM56P-J YM3404B	16 pin
AK5326-VP	28 pin
MN188161SDM	64 pin

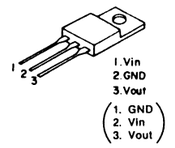

AN7812F AN7805F (AN79M20F) M5F78M12L (M5F79M12L) M5F78M05L (M5F79M05L)	3 pin

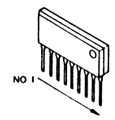

M5218AL	8 pin
TA7291S	9 pin

SVHHAF0614 7 pin

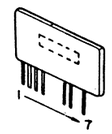

AN78L05ME2

MN1281R-TA

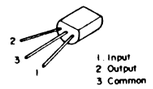

AN79L20

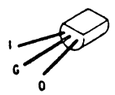

AN79N05

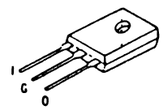

2SC1047DTA

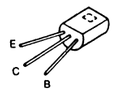

2SA1309STA
2SA1309QRSTA
2SC3311QRSTA
2SC3315CTA
2SD1450RSTTA

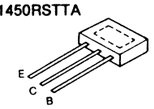

UN4124TA
UN4111TA
UN4114TA

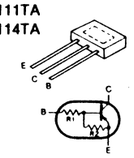

UN4212TA

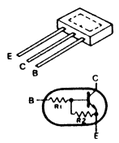

2SB709RTW DTA114EKTW
2SC3937TW DTB113ZKTW
UN5216TW
DTA123JKTW
DTC124EKTW

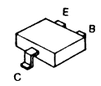

XN1112TW
XN1212TW

2SB956RTW
2SD1280STW

RVDSVC321

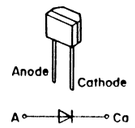

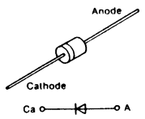

1SR35200TB
MA165TA
SVDS2V20
1N4606TR
1S2473TR
MA719TA

LN28RCPP-JF, LN31GPH-JF2
LN49YPH-JF1, LN29RPH-JF1

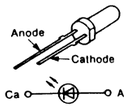

MA151ATW

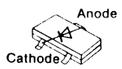

MA701TW

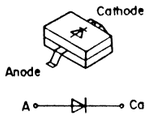

■ SCHEMATIC DIAGRAM

(Parts list on pages 82~84, 94~96.)

(This schematic diagram may be modified at any time with development of new technology.)

Note 1:

- **S901** : Output level selector switch (+4dBu/−10dBu).
- **S902** : DIP switch.
- Resistance are in ohms (Ω), 1/4 watt unless specified otherwise.
  1K=1,000 (Ω), 1M=1,000k (Ω)
- Capacity are in micro-farads (μF) unless specified otherwise.
- All voltage values shown in circuitry are under no signal condition and playback mode with volume control at minimum position otherwise specified.
  ( ).....Voltage values at recording mode.
  For measurement us EVM.
- Important safety notice
  Components identified by ⚠ mark have special characteristics important for safety. When replacing any of these components, use only manufacturer's specified parts.

Part No.	Original Part No.	Supply Part No.
IC551, 552	M5218AL	M5218L

- (▬▬▬) indicates +B (bias).
- (▬ ▬ ▬) indicates −B (bias).
- (⋯⋯) indicates the flow of the playback signal.
- (⇨) indicates the flow of the recording signal.

∗ Caution!

IC and LSI are sensitive to static electricity.
Secondary trouble can be prevented by taking care during repair.

- ∗ Cover the parts boxes made of plastics with aluminum foil.
- ∗ Ground the soldering iron.
- ∗ Put a conductive mat on the work table.
- ∗ Do not touch the legs of IC or LSI with the fingers directly.

B DIGITAL IN/OUT TERMINAL CIRCUIT

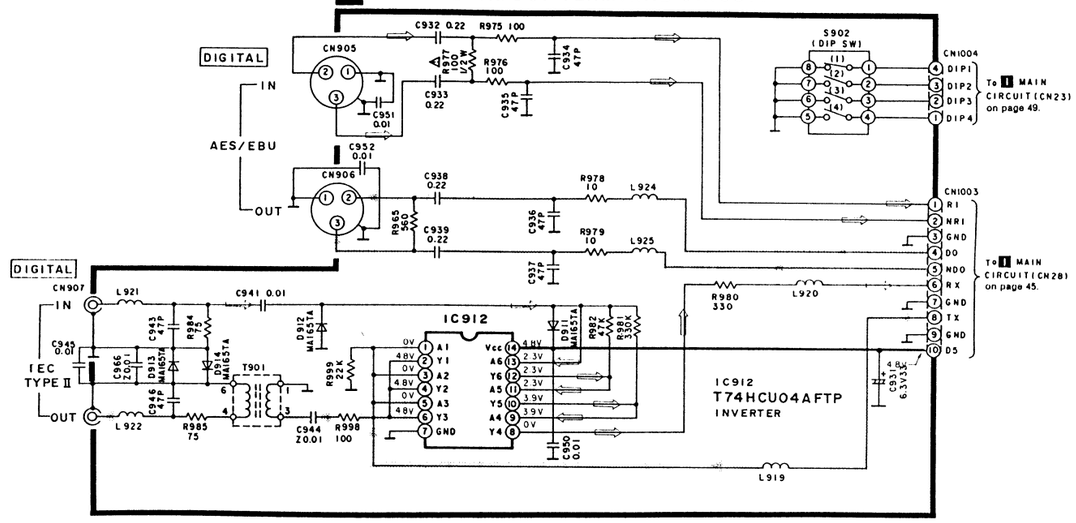

H ANALOG IN/OUT TERMINAL CIRCUIT

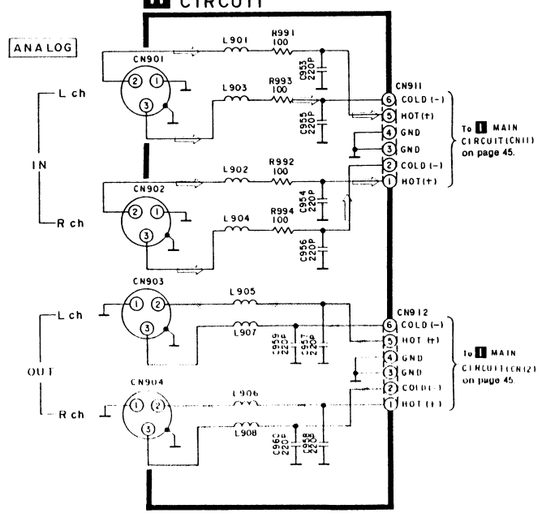

S HEADPHONES JACK CIRCUIT

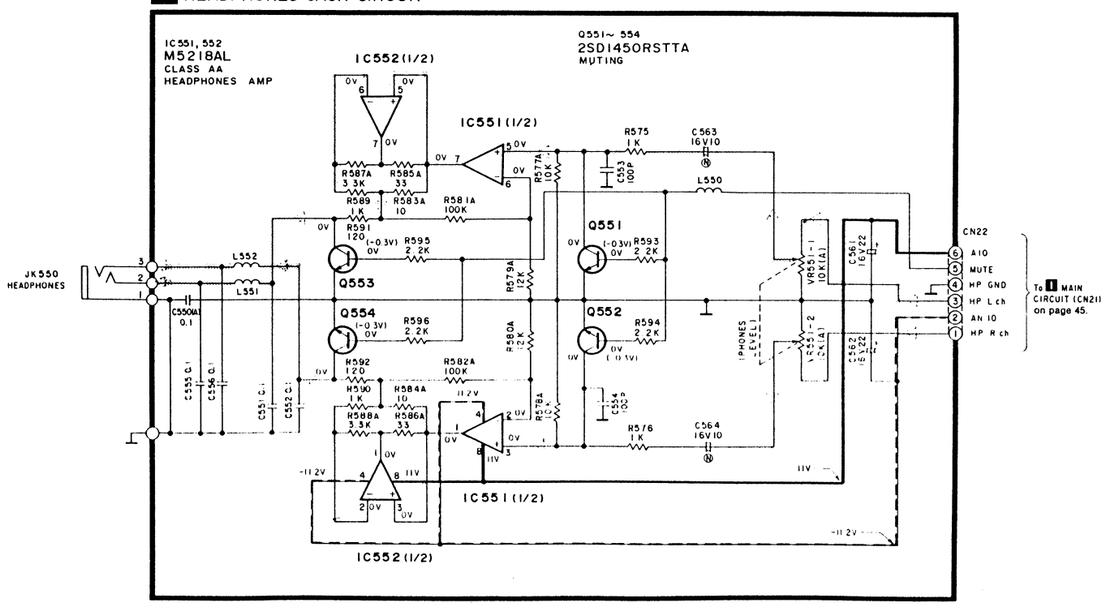

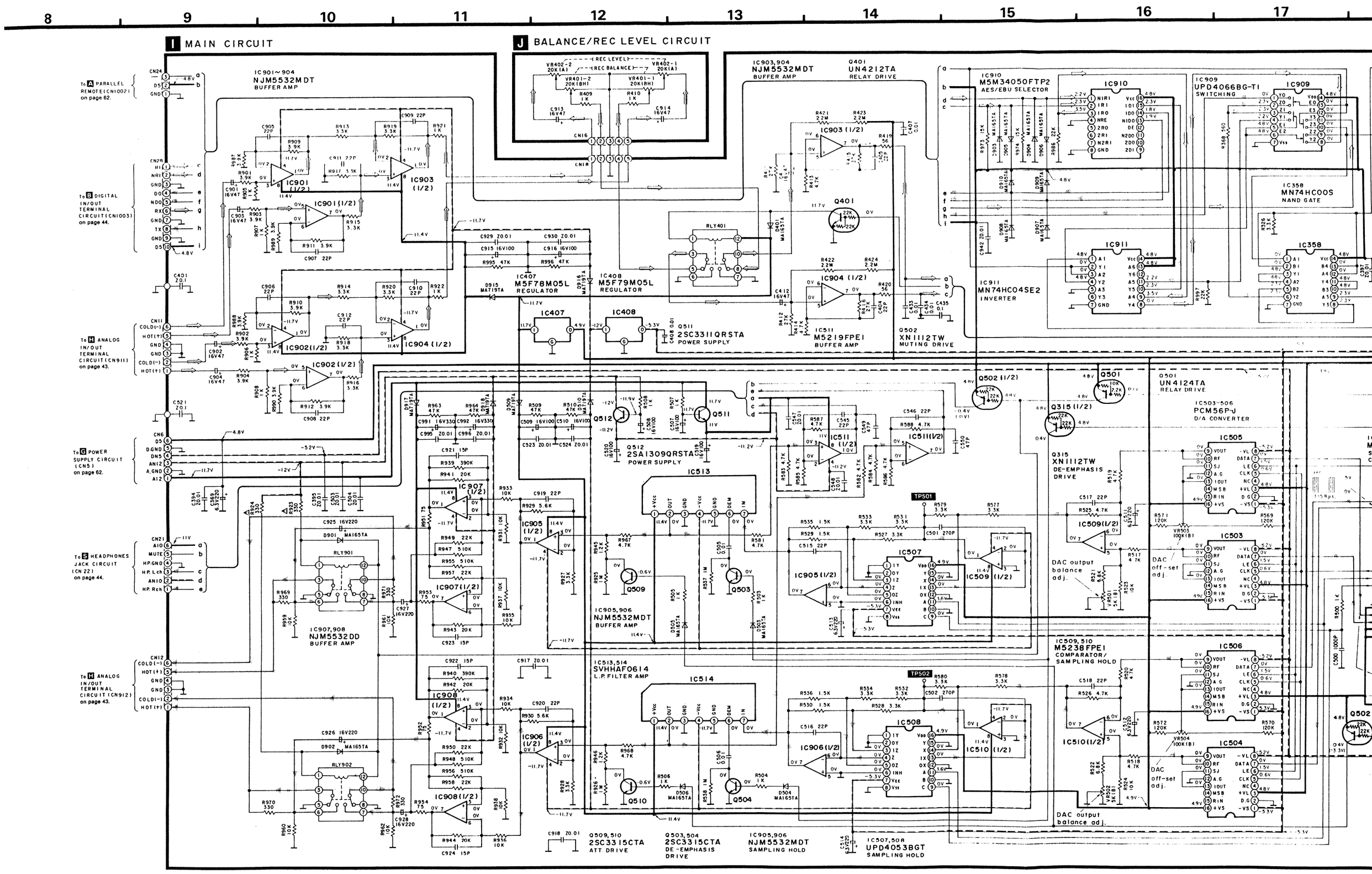

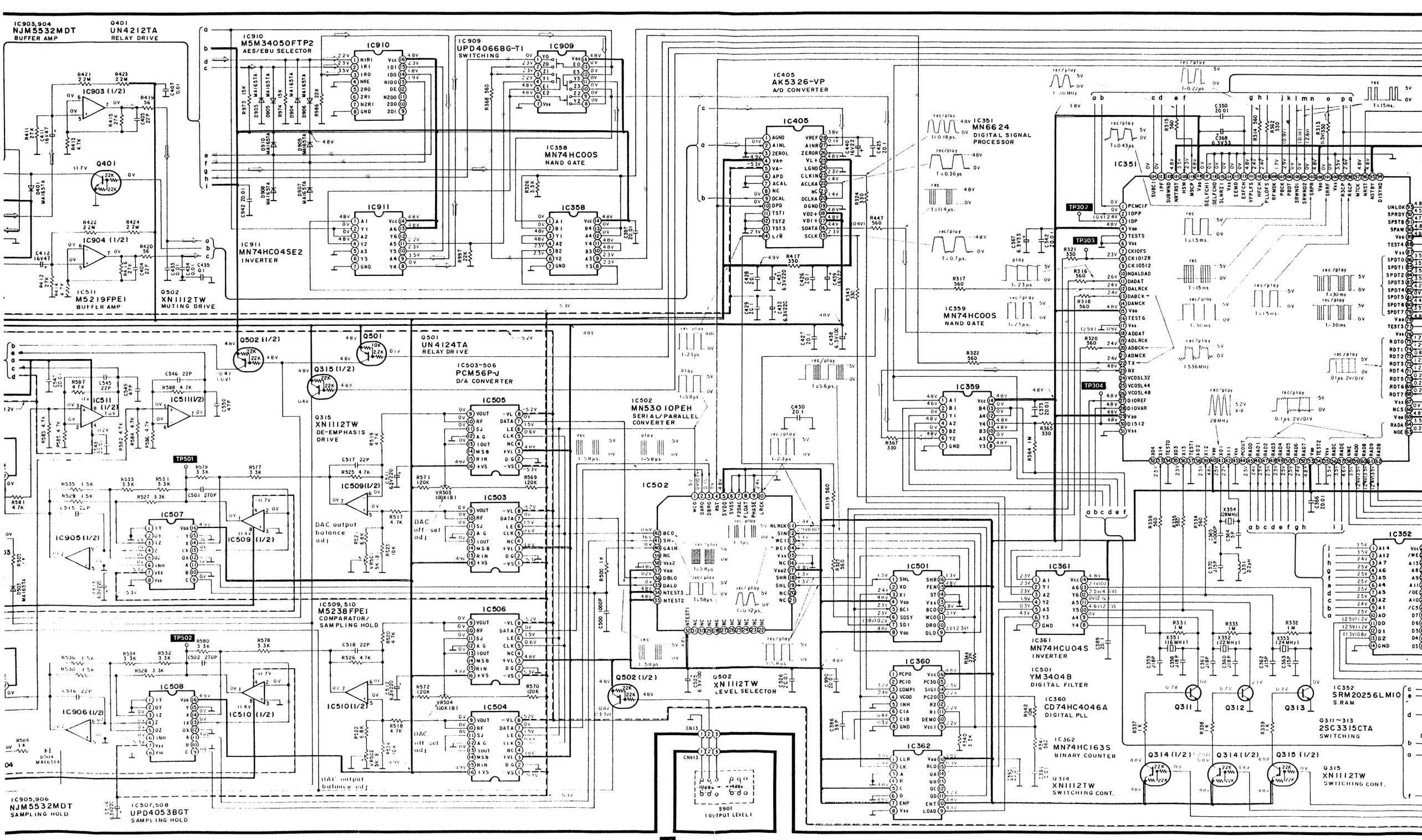

K OUTPUT LEVEL CIRCUIT

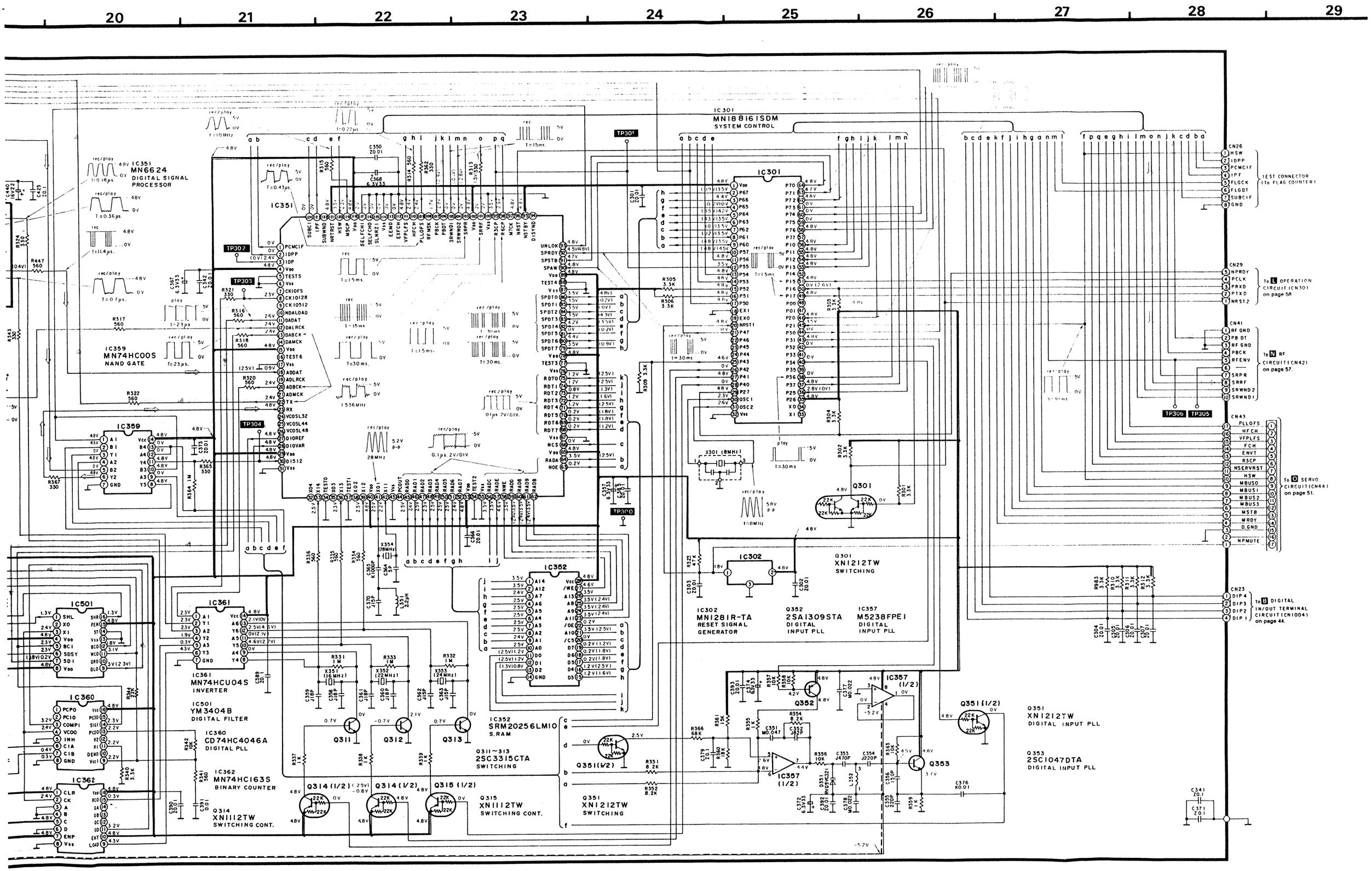

Note 2:

- **S701** : Tape hole detection switch.
- **S702** : Loading detection switch.
- **S703** : Mode detection switch.
- **S751** : Cassette tray open detection switch.
- **S752** : Cassette tray close detection switch.
- All voltage values shown in circuitry are under no signal condition and playback mode with volume control at minimum position otherwise specified.
  ( ) ..... Voltage values at recording mode.
  For measurement us EVM.
- Important safety notice
  Components identified by ⚠ mark have special characteristics important for safety. When replacing any of these components, use only manufacturer's specified parts.
- (▬▬▬) indicates +B (bias).
- (▬ ▬ ▬) indicates −B (bias).
- (⋯⋯) indicates the flow of the playback signal.
- (⇨) indicates the flow of the recording signal.
- The "IC701, IC702, Q701, Q702, D701, MR701, L701~708, CAPH701~703, CYLH701~703" parts are not supplied separately and are thus not found on the replacement parts list.

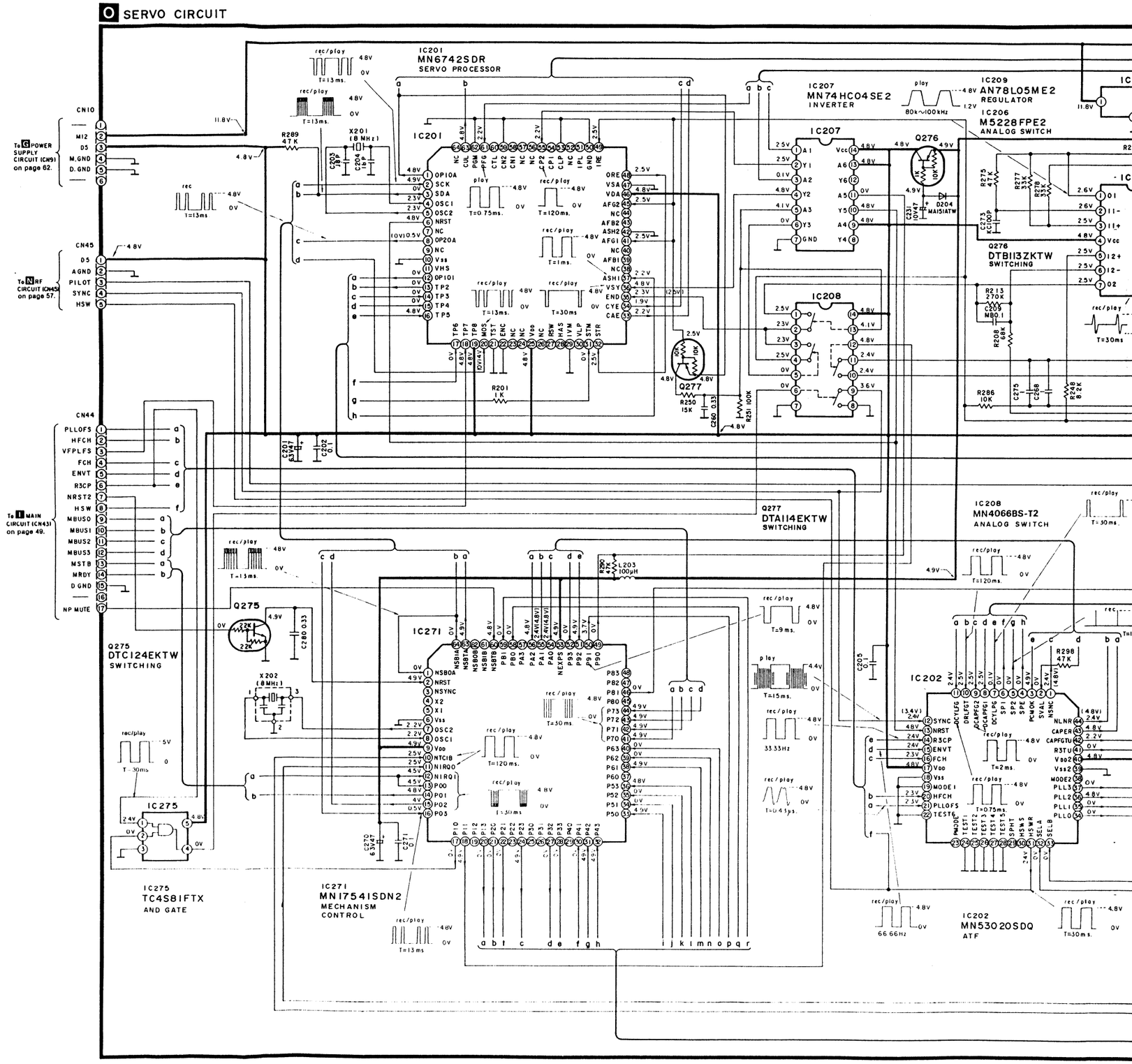

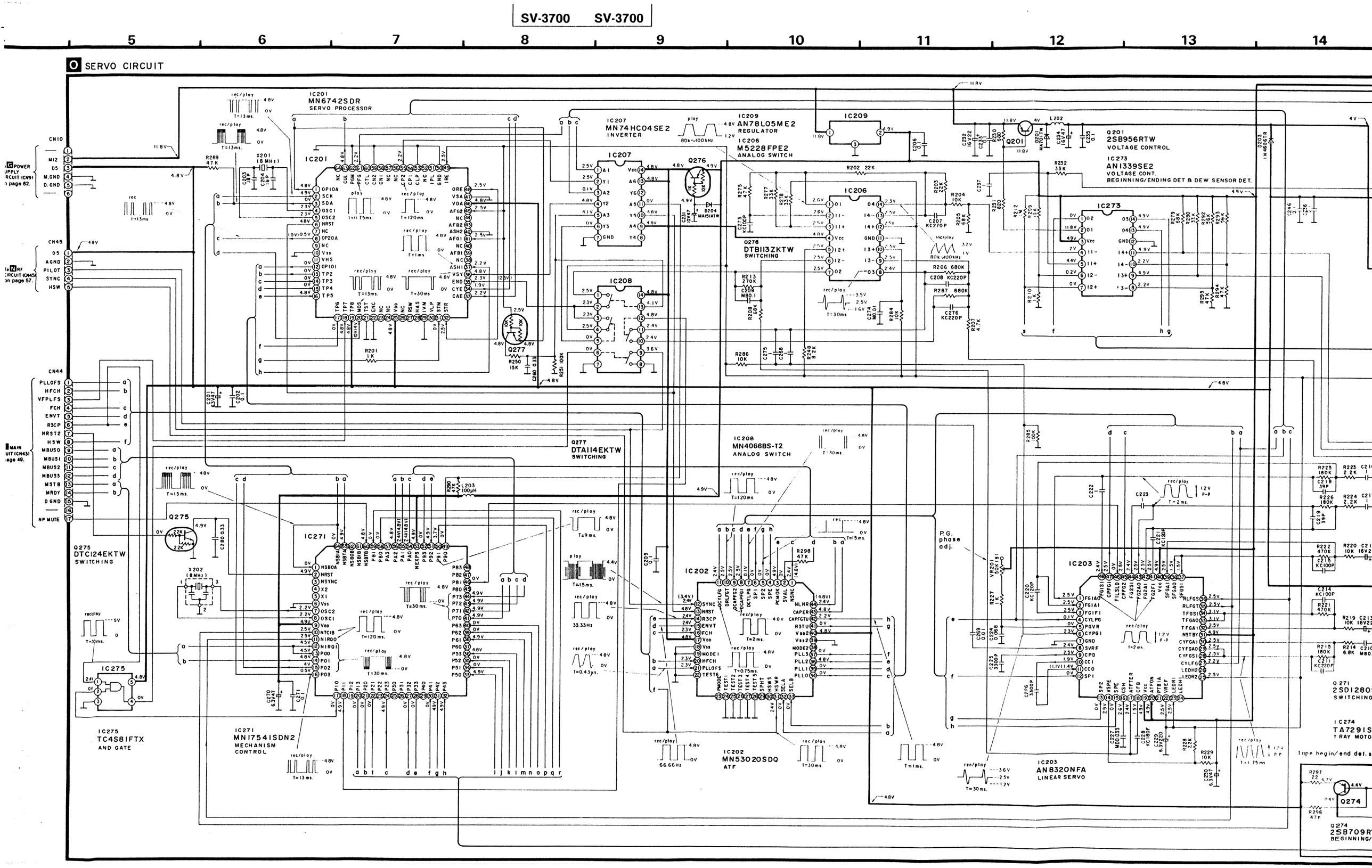

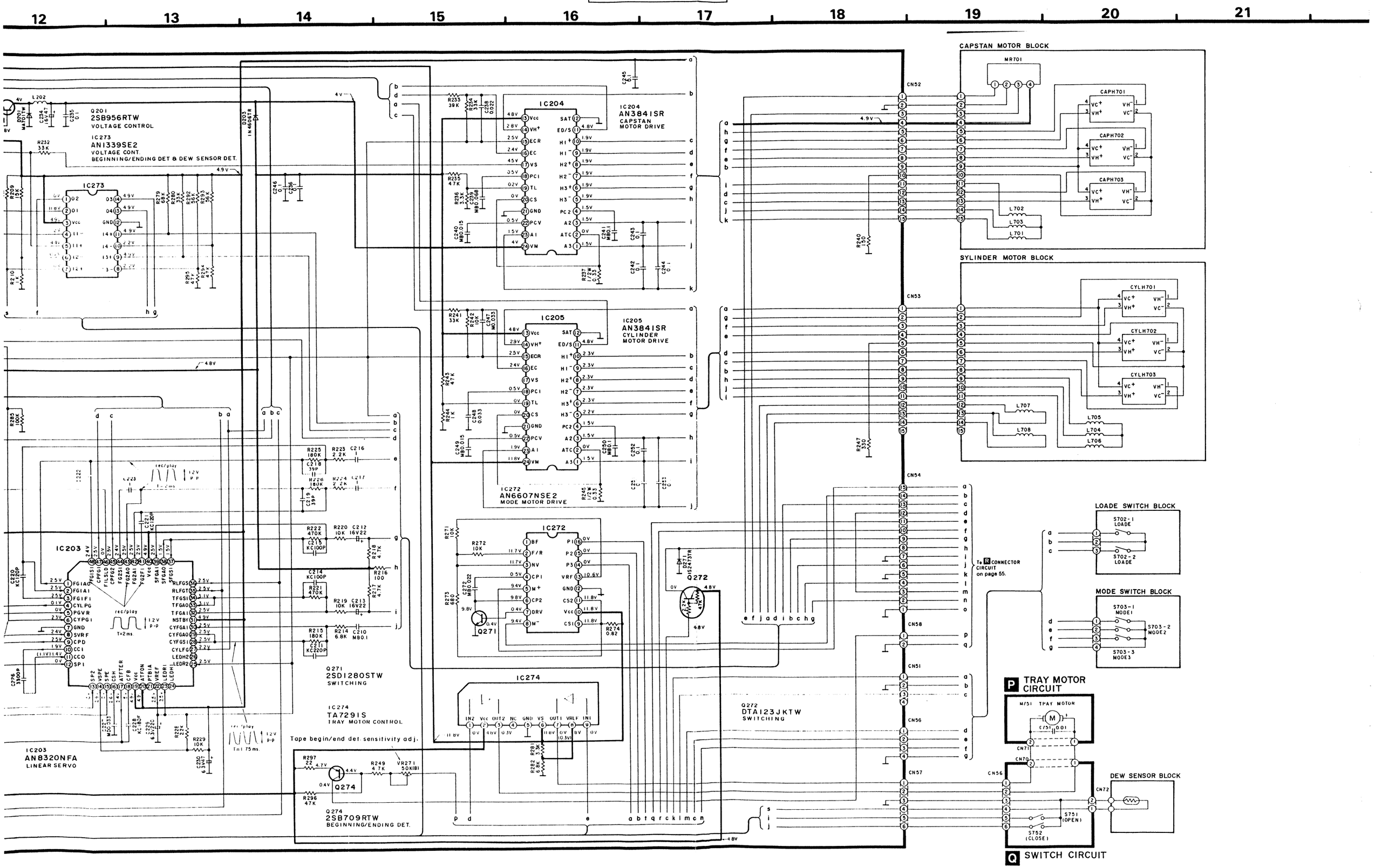

R CONNECTOR CIRCUIT

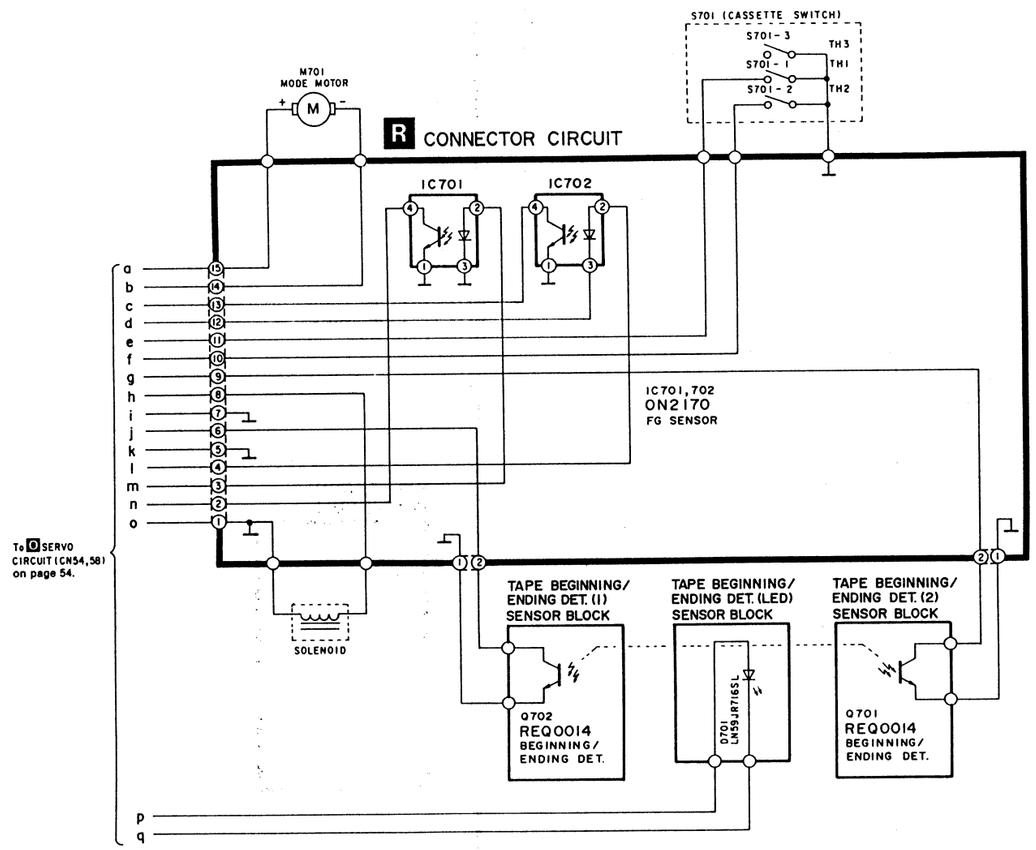

N RF CIRCUIT

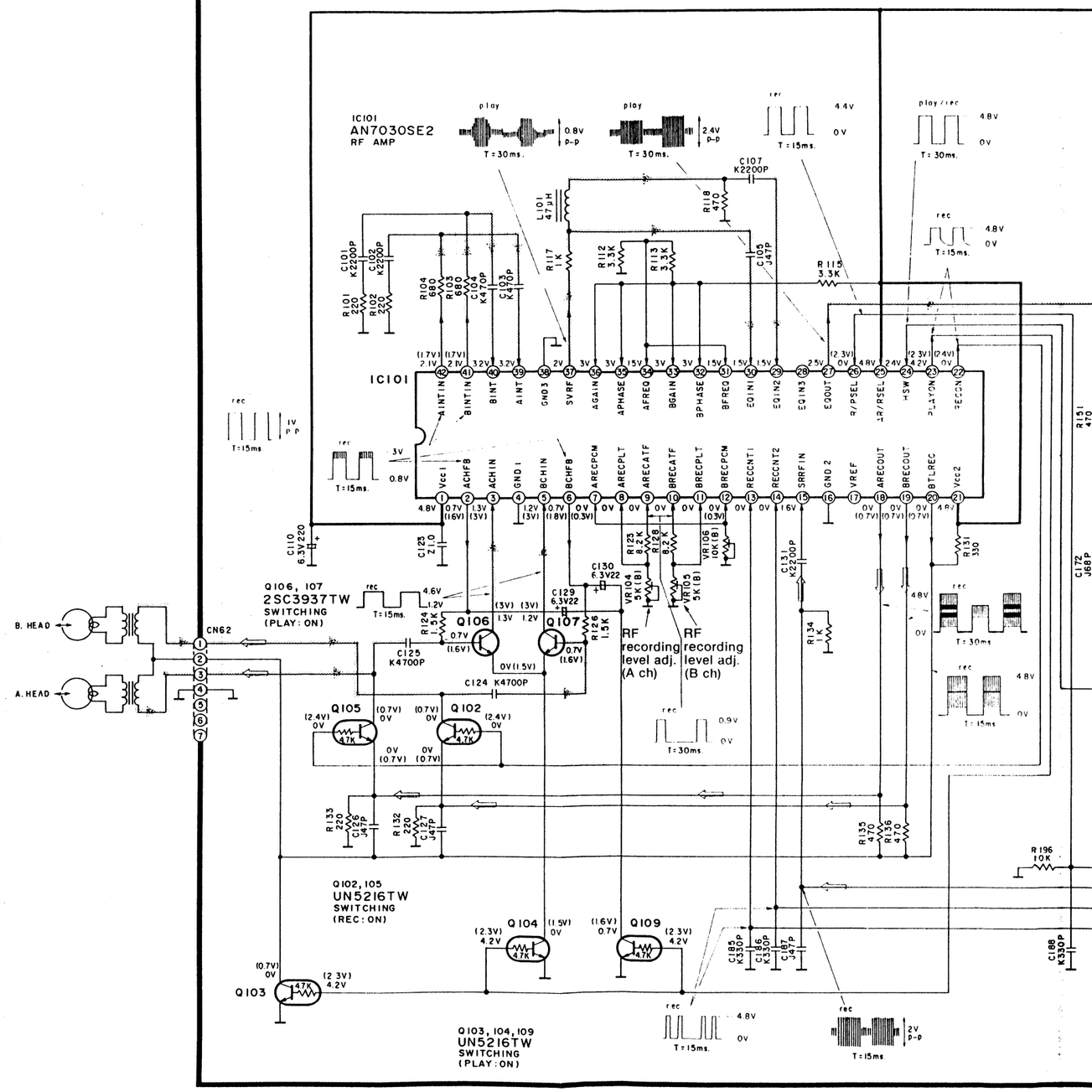

27 28 29 30 31 32 33 34 35 36

N RF CIRCUIT

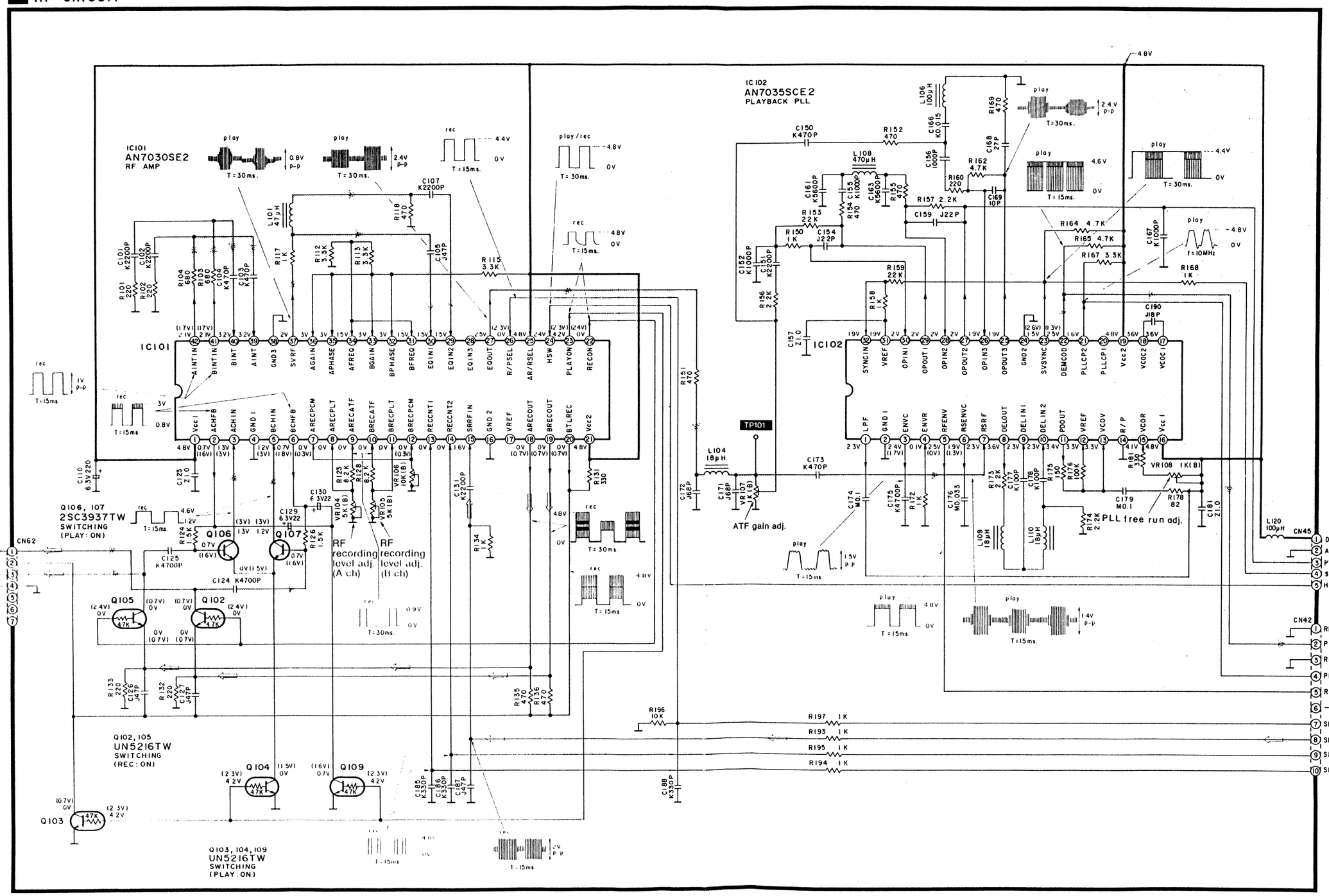

Note 3:

- **S1** : Power switch (POWER).
- **S2** : Voltage selector switch.
- **S601** : Sampling frequency selector switch. (SAMPLING FREQUENCY) (44.1kHz ↔ 48kHz).
- **S602** : Input selector switch (INPUT) (▬ DIGITAL/▬ ANALOG).
- **S611** : ID erase switch (ID ERASE).
- **S612** : End search switch (END SEARCH).
- **S613** : Start ID switch (START ID).
- **S614** : Skip ID switch (SKIP ID).
- **S615** : End switch (END).
- **S616** : Counter reset switch (COUNTER RESET).
- **S617** : Renumber switch (RENUMBER).
- **S618** : Rew/rev switch (REW/REV).
- **S619** : FF/cue switch (FF/CUE).
- **S620** : Fade out switch (FADE OUT).
- **S621** : Fade in switch (FADE IN).
- **S622** : PNO/start ID auto switch (PNO/START ID AUTO).
- **S623** : Counter mode switch (COUNTER MODE).
- **S624, 625** : Skip switches (SKIP). [S624 ⏮, S625 ⏭]
- **S626** : Pause switch (PAUSE).
- **S627** : Record switch (REC).
- **S628** : Auto rec mute switch (AUTO REC MUTE).
- **S630** : ID write switch (ID WRITE).
- **S631** : Play switch (PLAY).
- **S632** : Stop switch (STOP).
- **S633** : Skip play cancel switch (SKIP PLAY CANCEL).
- **S634** : Music scan switch (MUSIC SCAN).
- **S635** : Open/close switch (OPEN/CLOSE).
- All voltage values shown in circuitry are under no signal condition and playback mode with volume control at minimum position otherwise specified.
  ( )..... Voltage values at recording mode.
  For measurement us EVM.
- Important safety notice
  Components identified by ⚠ mark have special characteristics important for safety. When replacing any of these components, use only manufacturer's specified parts.
- (▬▬▬) indicates +B (bias).
- (▬ ▬ ▬) indicates −B (bias).
- (⟿) indicates the flow of the playback signal.
- (⇨) indicates the flow of the recording signal.

L OPERATION CIRCUIT

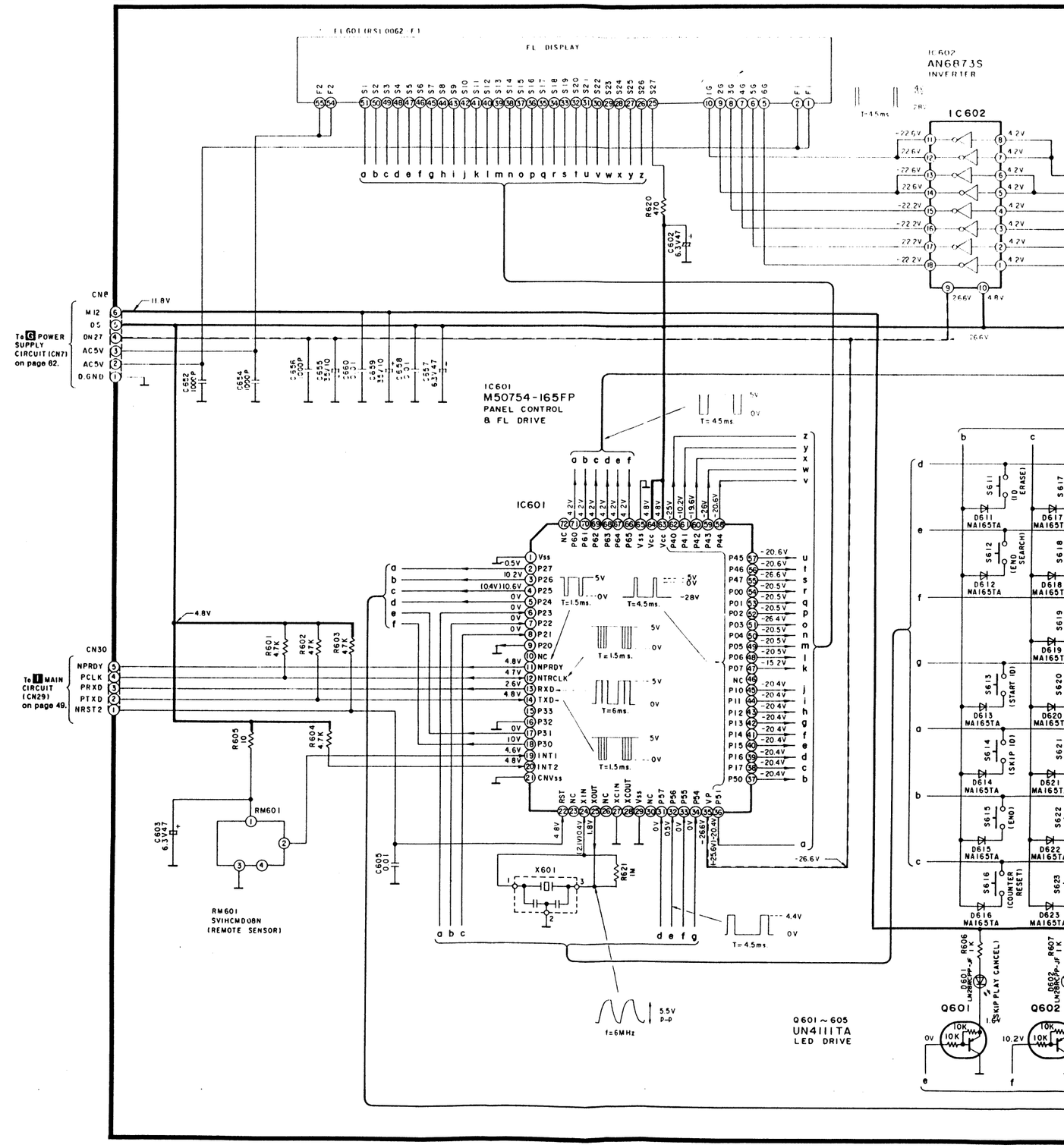

5 6 7 8 9 10 11 12 13 14

L OPERATION CIRCUIT

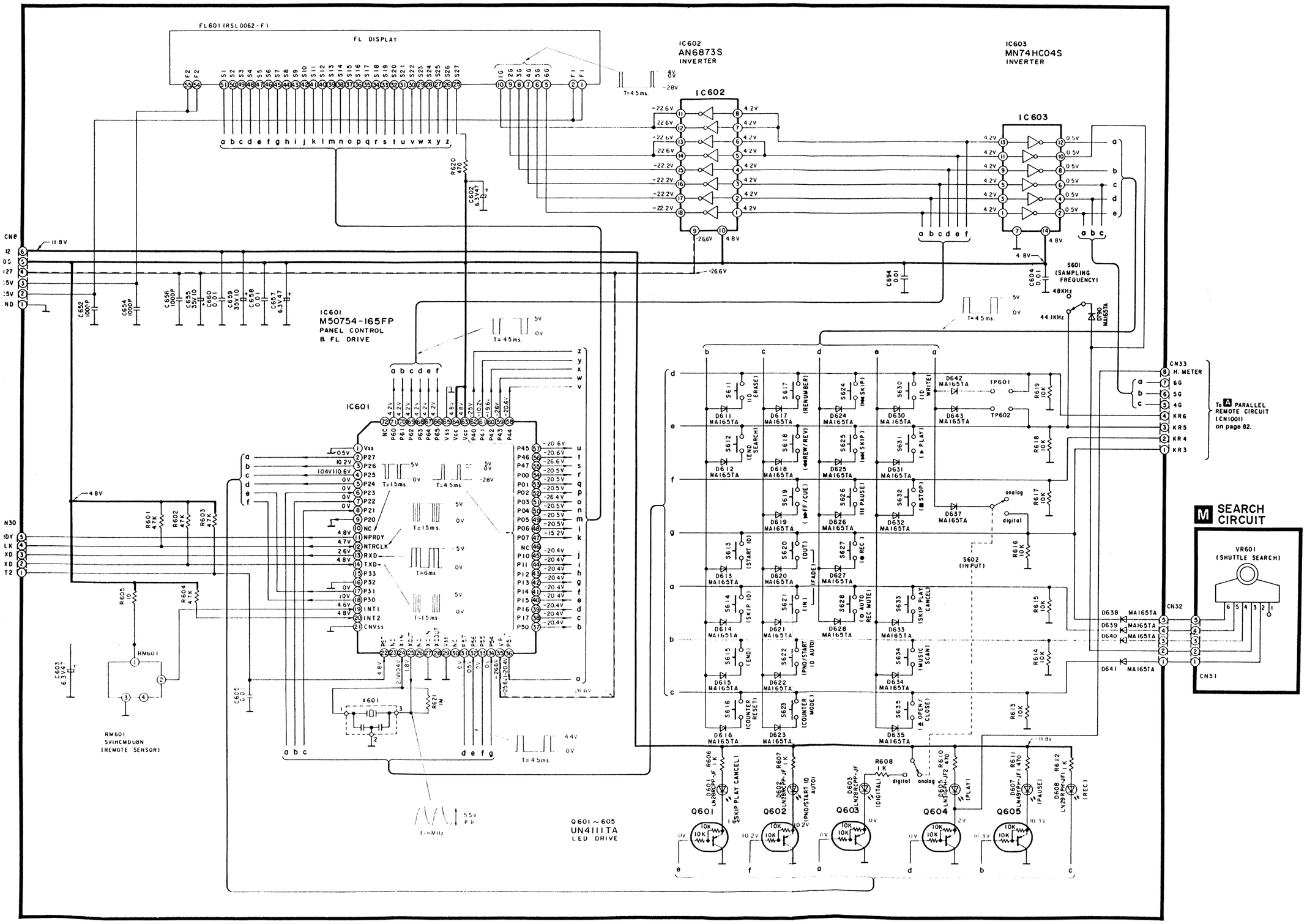

A PARALLEL REMOTE CIRCUIT

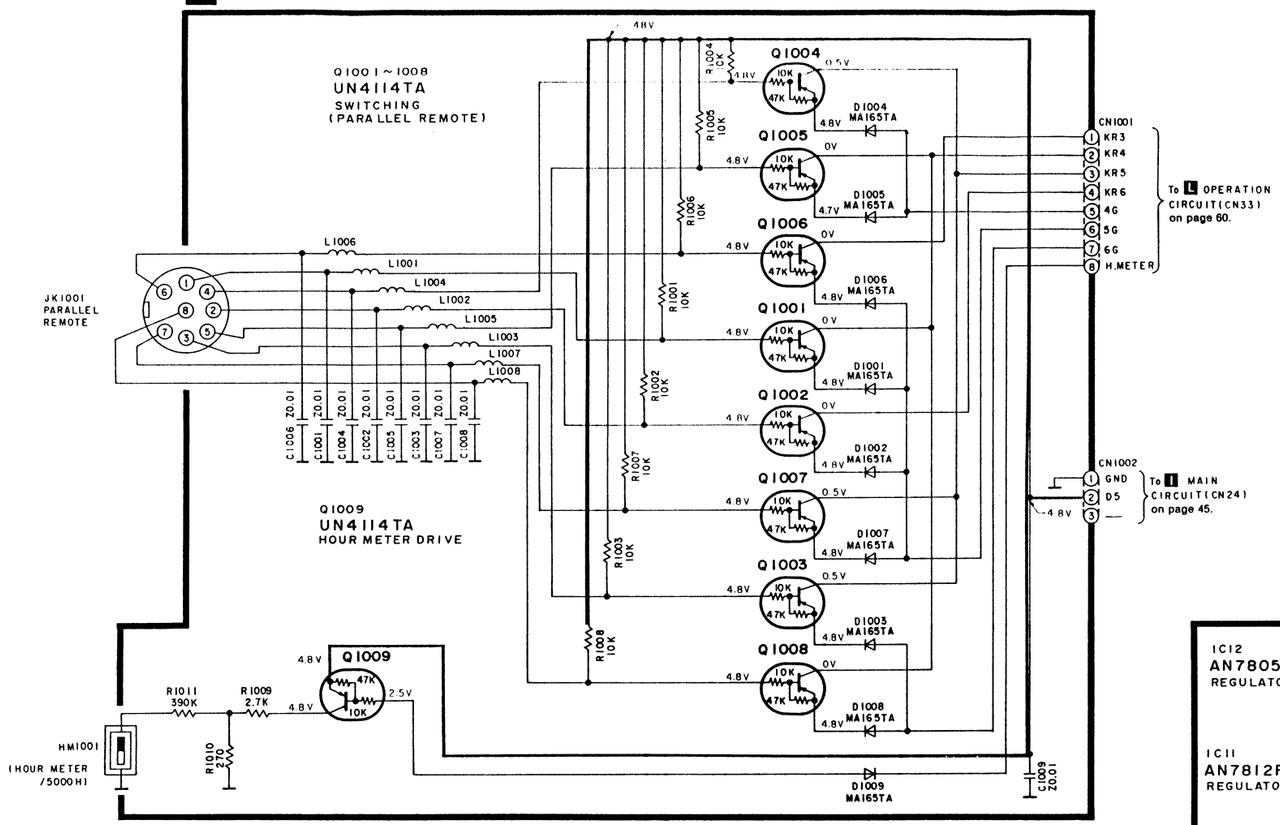

C REGULATOR IC CIRCUIT

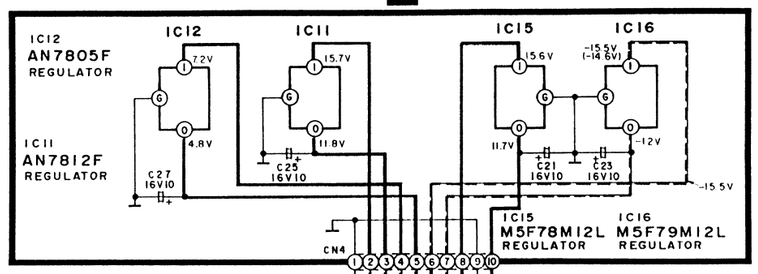

D AC IN CIRCUIT

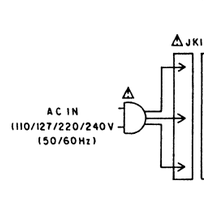

E POWER SWITCH CIRCUIT

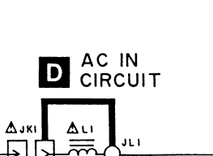

F POWER TRANSFORMER CIRCUIT

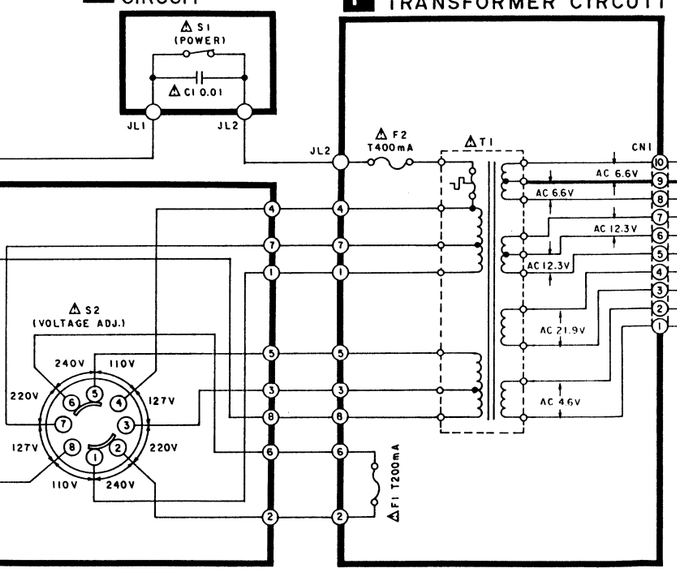

T VOLTAGE ADJ. CIRCUIT

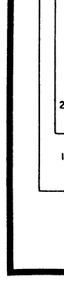

G POWER SUPPLY CIRCUIT

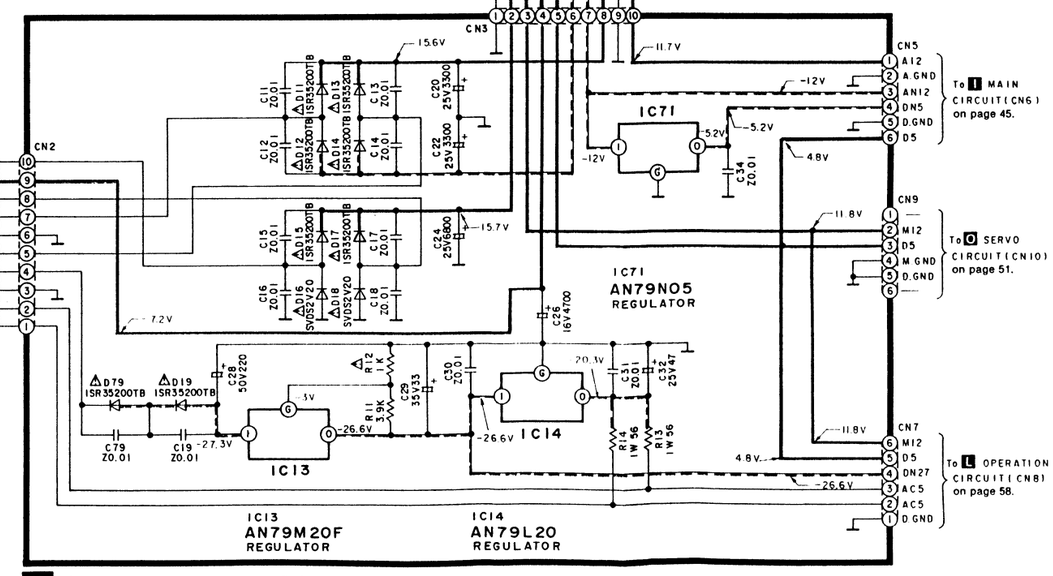

WIRING CONNECTION DIAGRAM

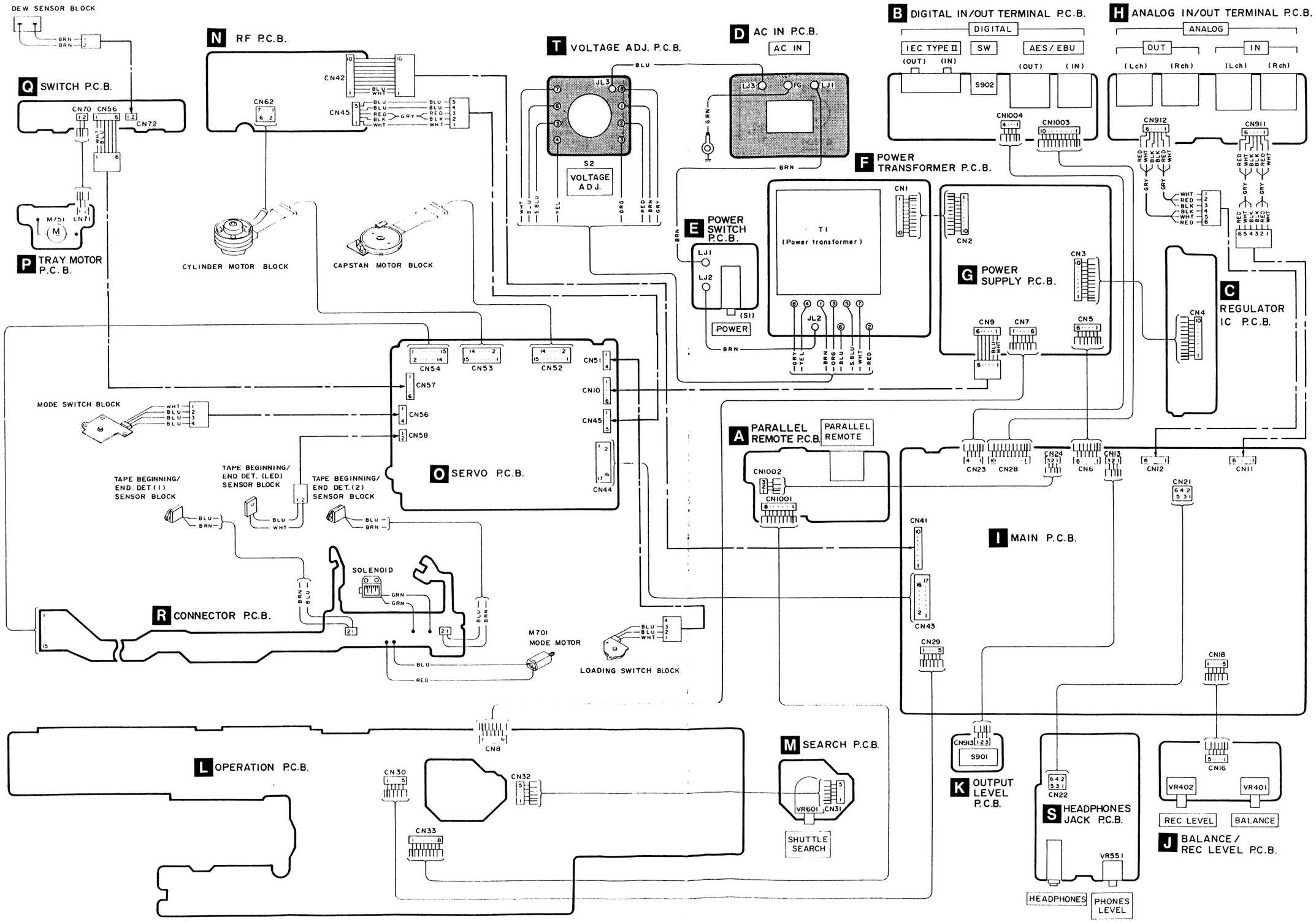

PRINTED CIRCUIT BOARDS

I MAIN P.C.B. (RFKBV3700EBI)

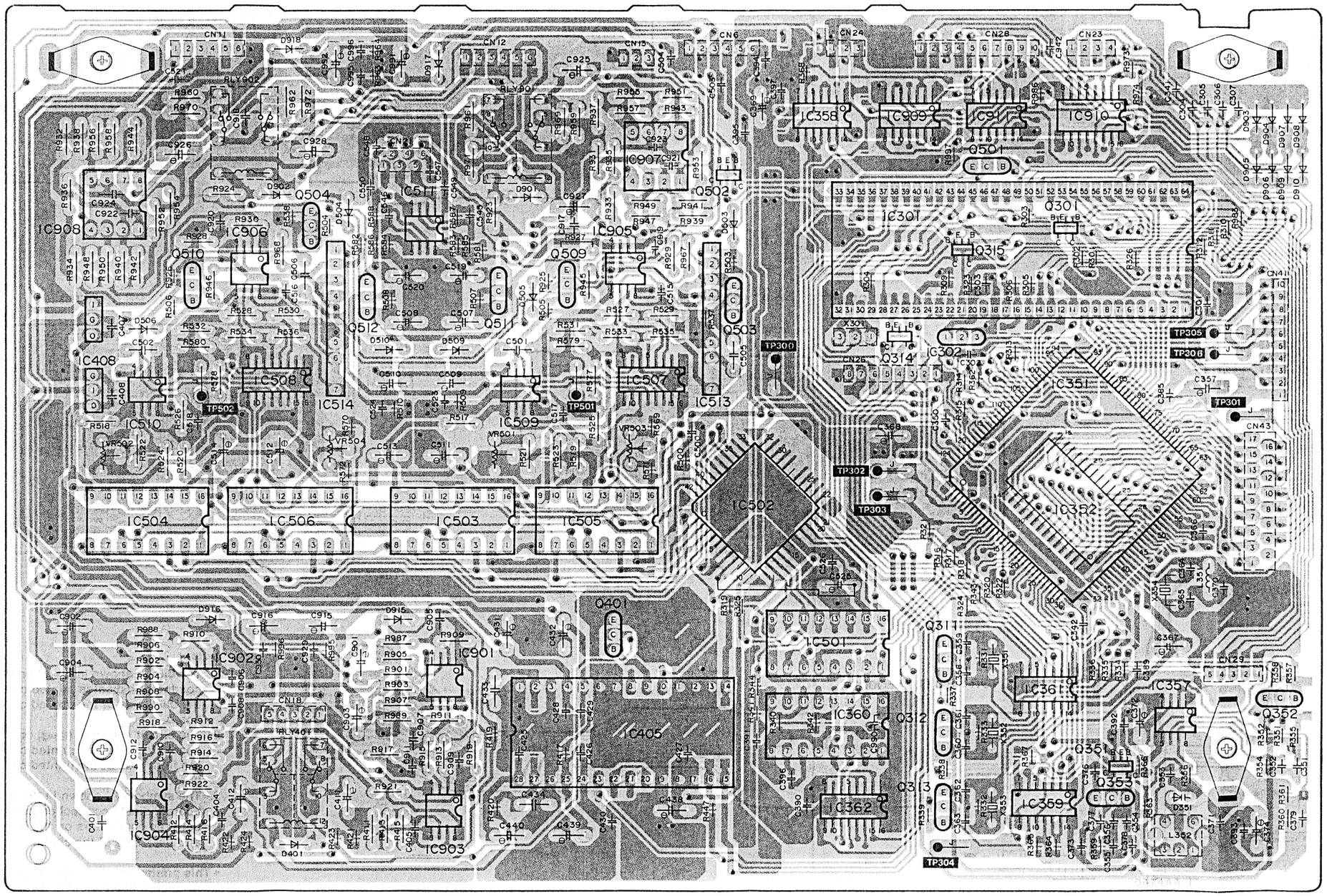

Notes:

1. The circuit shown in ( ) on the conductor indicates printed circuit on the back side of the printed circuit board.
2. The circuit shown in ( ) on the conductor indicates printed circuit on the front side of the printed circuit board.
3. The symbols (•) shown in the circuit board indicate connection points between conductors on the front side and back side of the circuit board.

• This printed circuit board may be modified at any time with the developement of new technology.

B DIGITAL IN/OUT TERMINAL P.C.B. (RFKBV3700EBA)

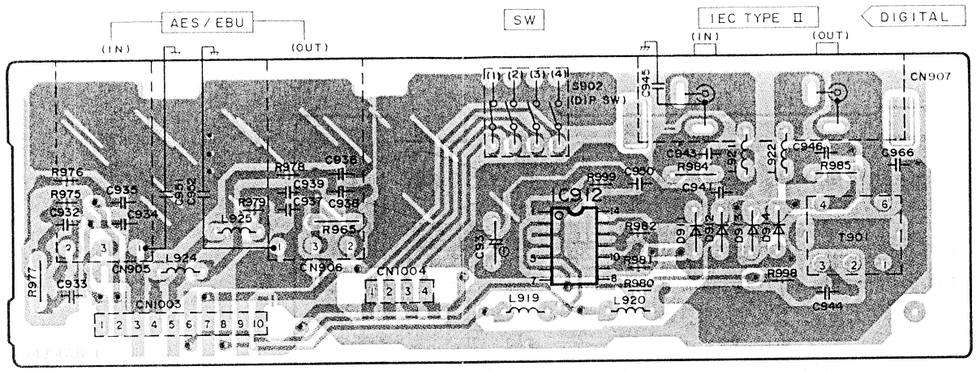

H ANALOG IN/OUT TERMINAL P.C.B. (RFKBV3700EBA)

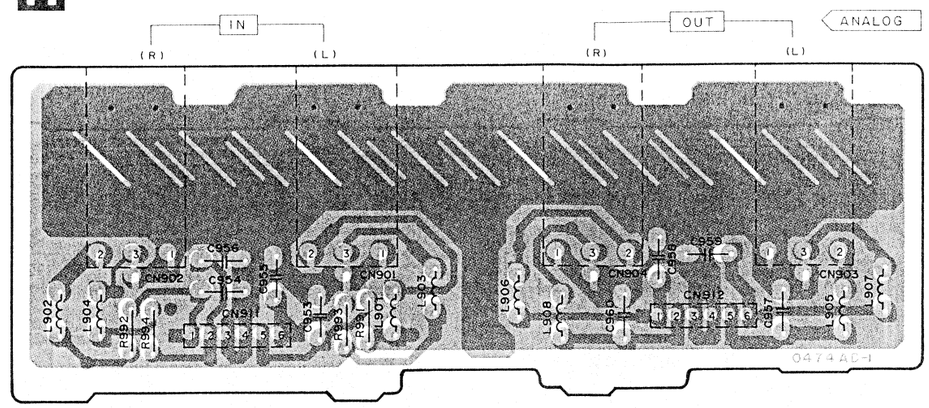

K OUTPUT LEVEL P.C.B. (RFKBV3700EBA)

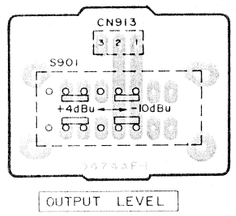

A PARALLEL REMOTE P.C.B. (RFKBV3700EBA)

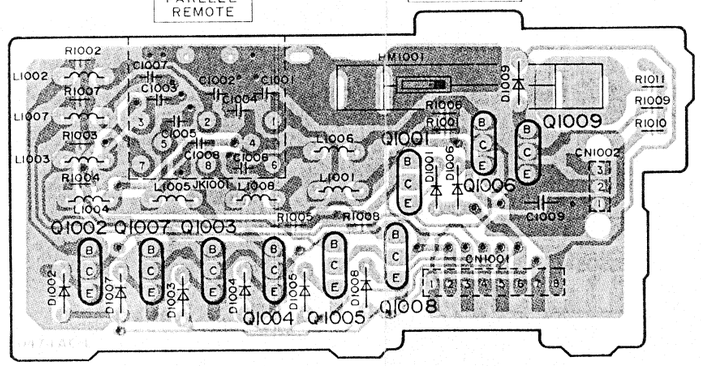

S HEADPHONES JACK P.C.B. (REP0694A)

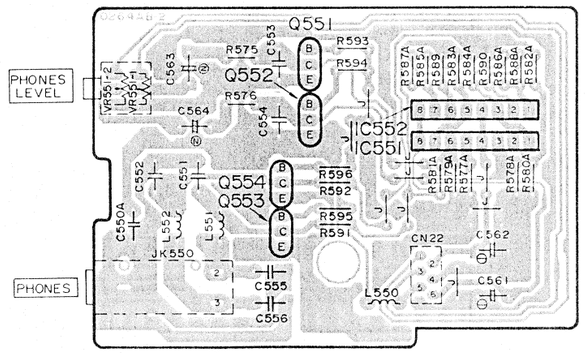

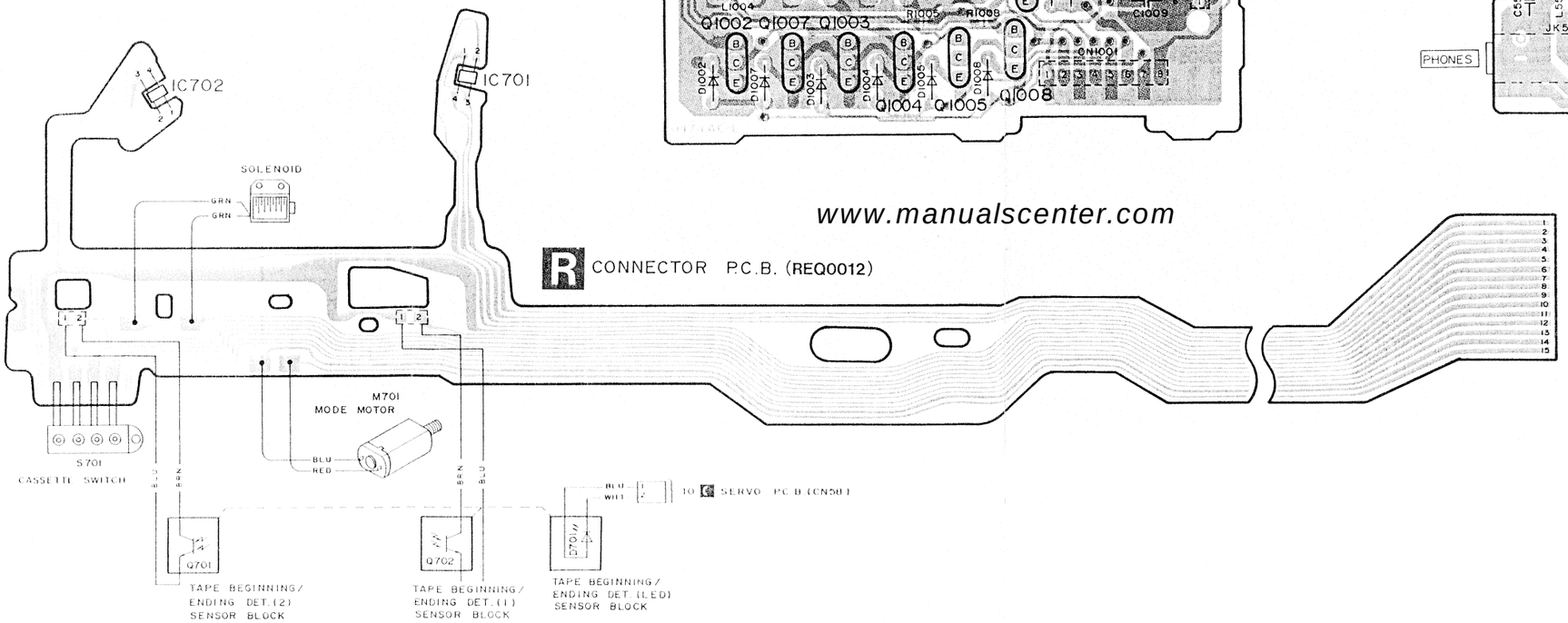

R CONNECTOR P.C.B. (REQ0012)

Notes:

1. The circuit shown in ( ) on the conductor indicates printed circuit on the back side of the printed circuit board.
2. The circuit shown in ( ) on the conductor indicates printed circuit on the front side of the printed circuit board.
3. The symbols (•) shown in the circuit board indicate connection points between conductors on the front side and back side of the circuit board.

• **This printed circuit board may be modified at any time with the developement of new technology.**

1 2 3 4 5 6 7 8 9

A B C D E F G

B DIGITAL IN/OUT TERMINAL P.C.B. (RFKBV3700EBA)

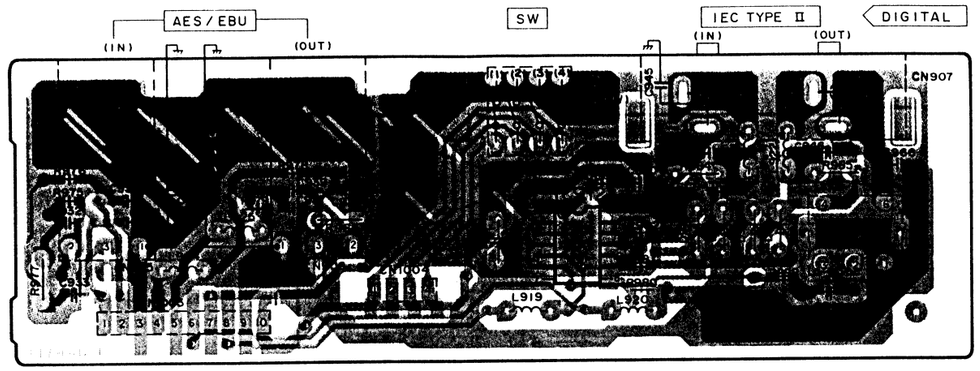

H ANALOG IN/OUT TERMINAL P.C.B. (RFKBV3700EBA)

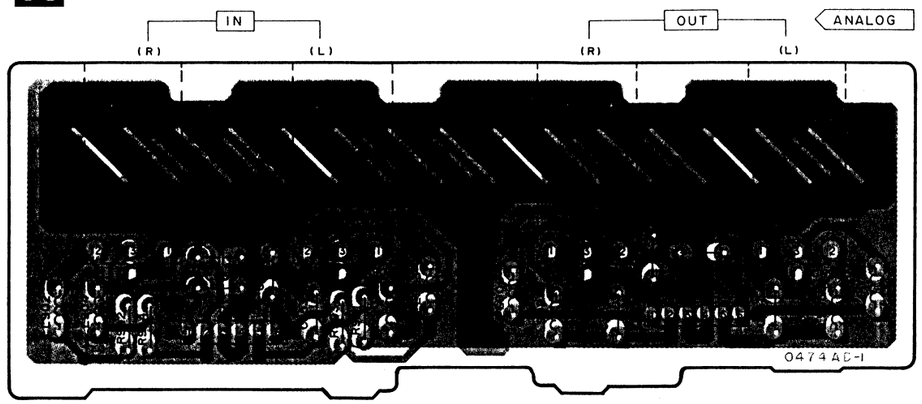

K OUTPUT LEVEL P.C.B. (RFKBV3700EBA)

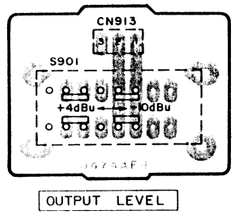

A PARALLEL REMOTE P.C.B. (RFKBV3700EBA)

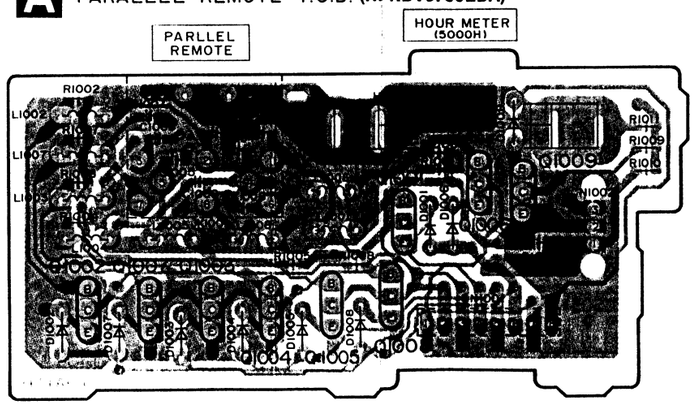

S HEADPHONES JACK P.C.B. (REP0694A)

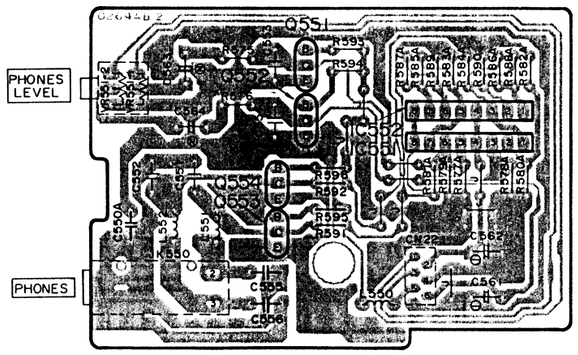

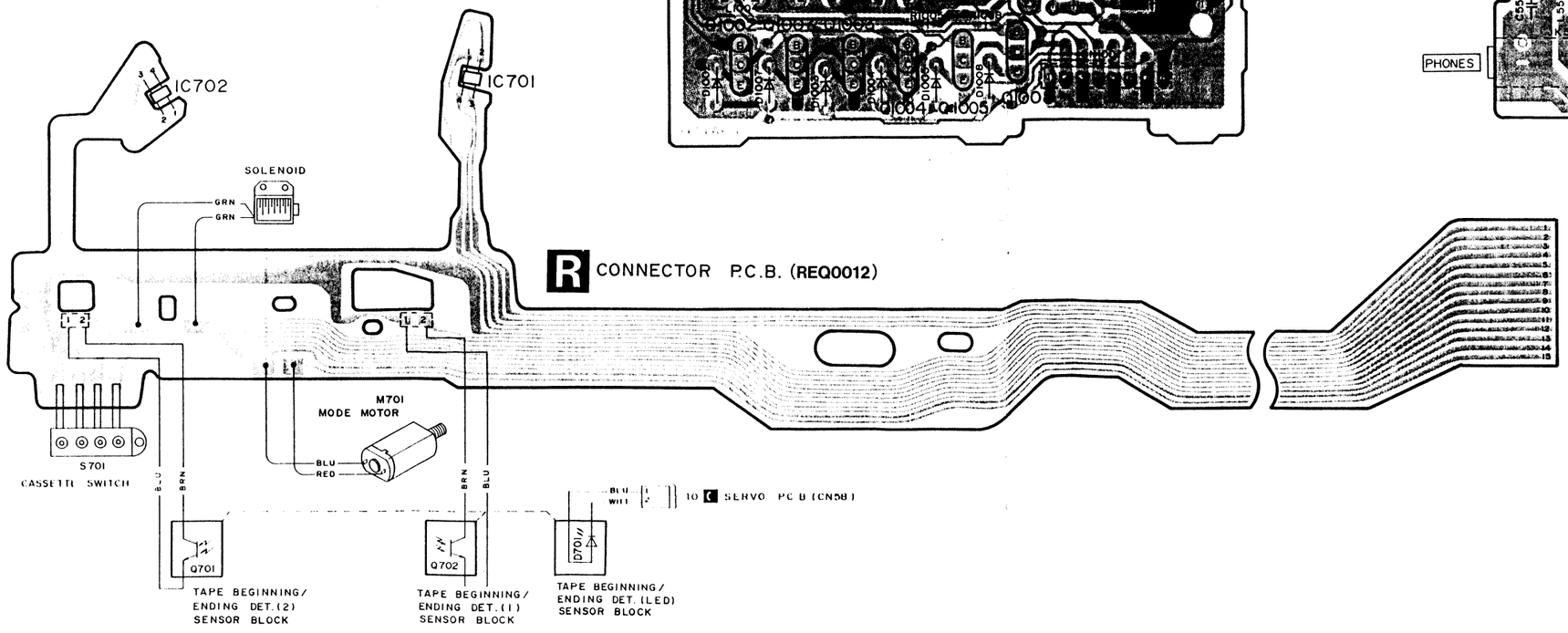

Notes:

1. The circuit shown in (▬) on the conductor indicates printed circuit on the back side of the printed circuit board.
2. The circuit shown in (▬) on the conductor indicates printed circuit on the front side of the printed circuit board.
3. The symbols (•) shown in the circuit board indicate connection points between conductors on the front side and back side of the circuit board.

• This printed circuit board may be modified at any time with the developement of new technology.

10 11 12 13 14 15 16 17 18 19

N RF P.C.B. (RFKBV3700-N)

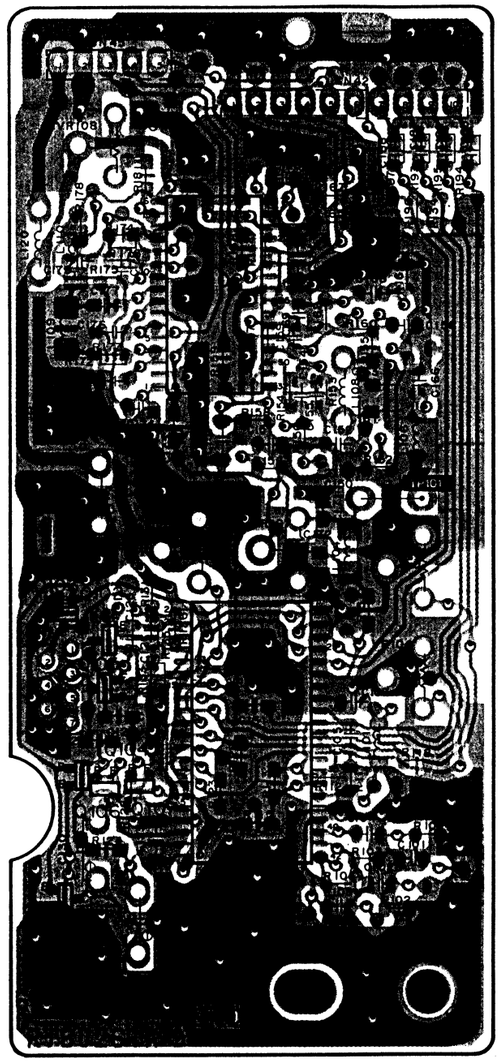

O SERVO P.C.B. (RFKBV3700-O)

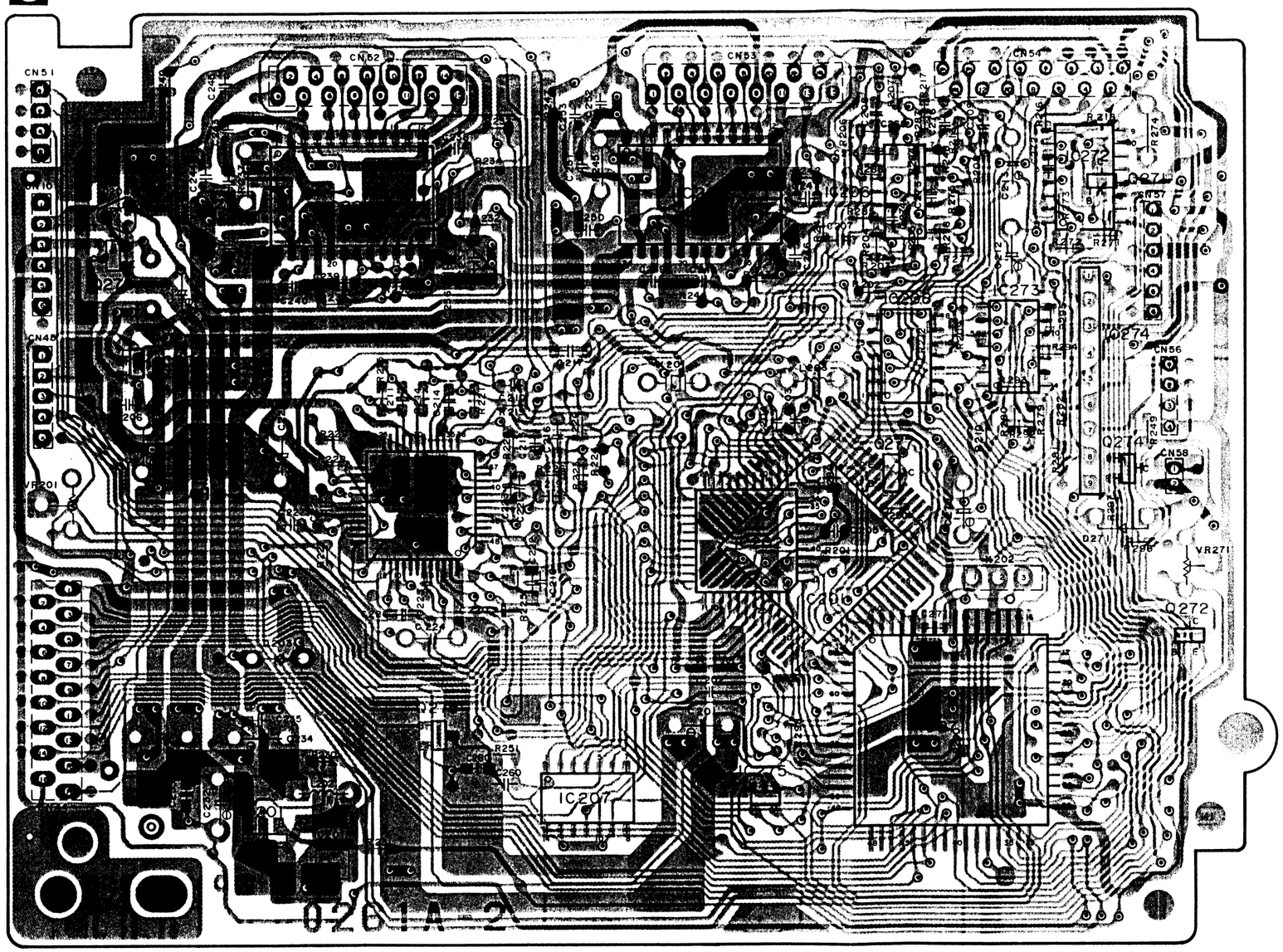

J BALANCE / REC LEVEL P.C.B. (RFKBV3700EBA)

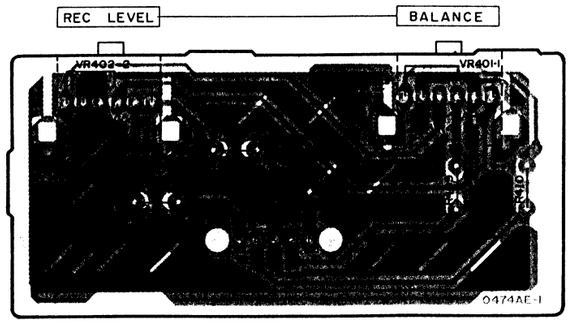

P TRAY MOTOR P.C.B. (REP0421A)

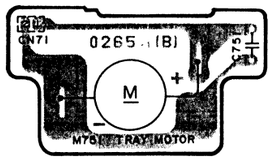

Q SWITCH P.C.B. (REP0421A)

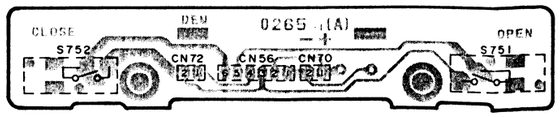

M SEARCH P.C.B. (REP0694A)

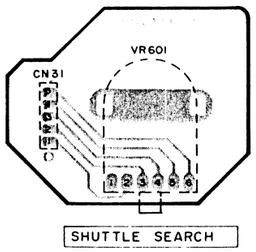

L OPERATION P.C.B. (REP0694A)

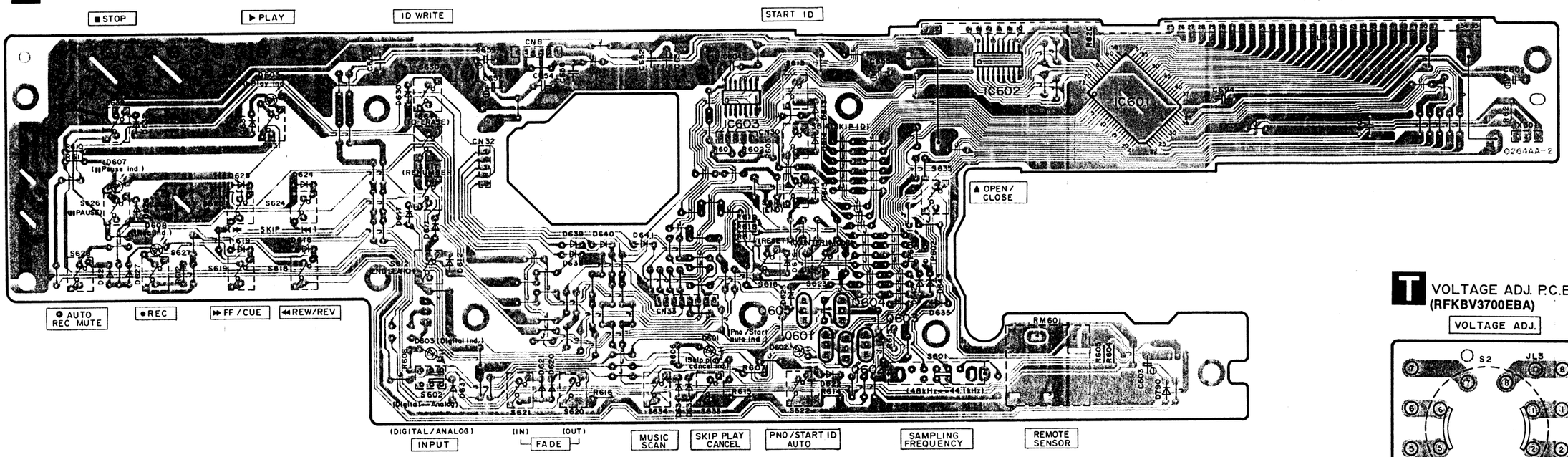

T VOLTAGE ADJ. P.C.B. (RFKBV3700EBA)

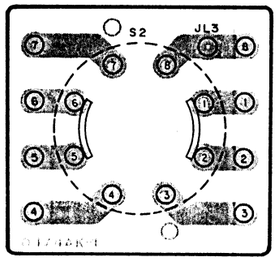

D AC IN P.C.B. (RFKBV3700EBA)

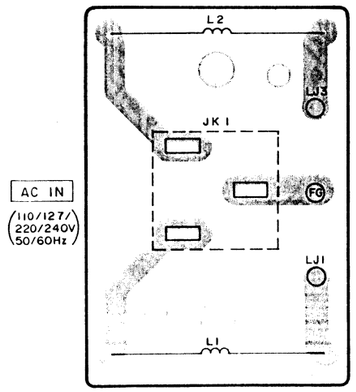

E POWER SWITCH P.C.B. (RFKBV3700EBA)

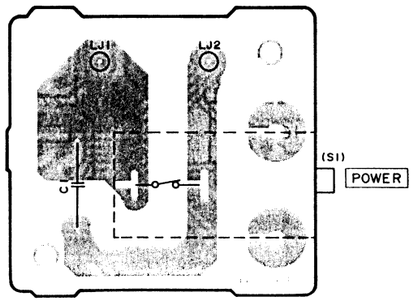

F POWER TRANSFORMER P.C.B. (RFKBV3700EBA)

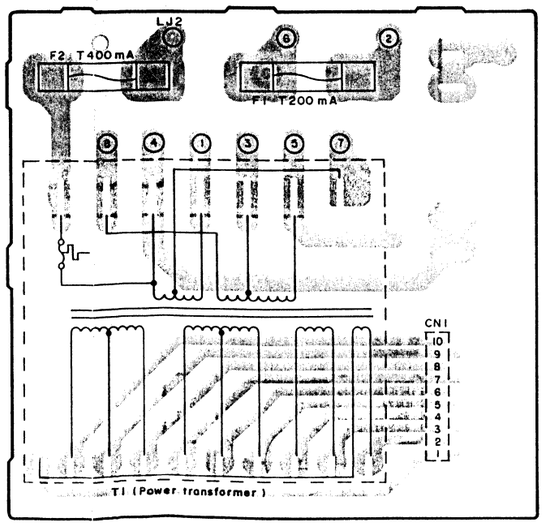

G POWER SUPPLY P.C.B. (REP0693A)

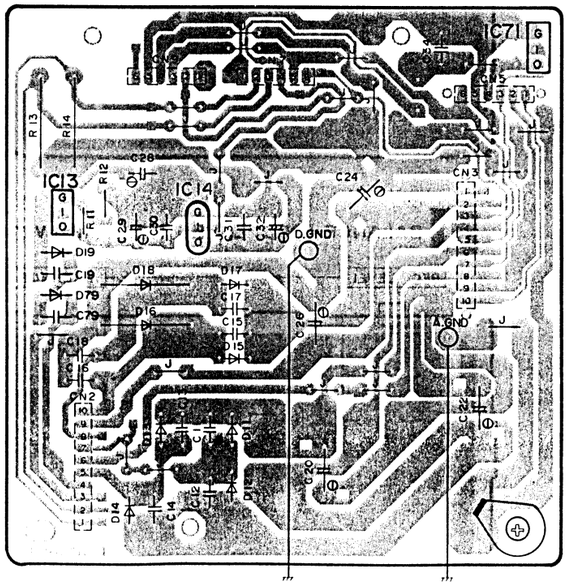

C REGULATOR IC P.C.B. (REP0693A)

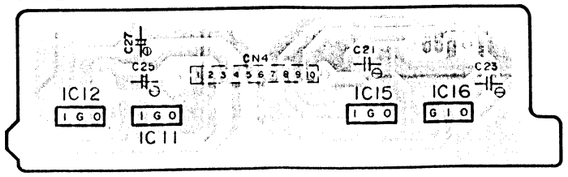

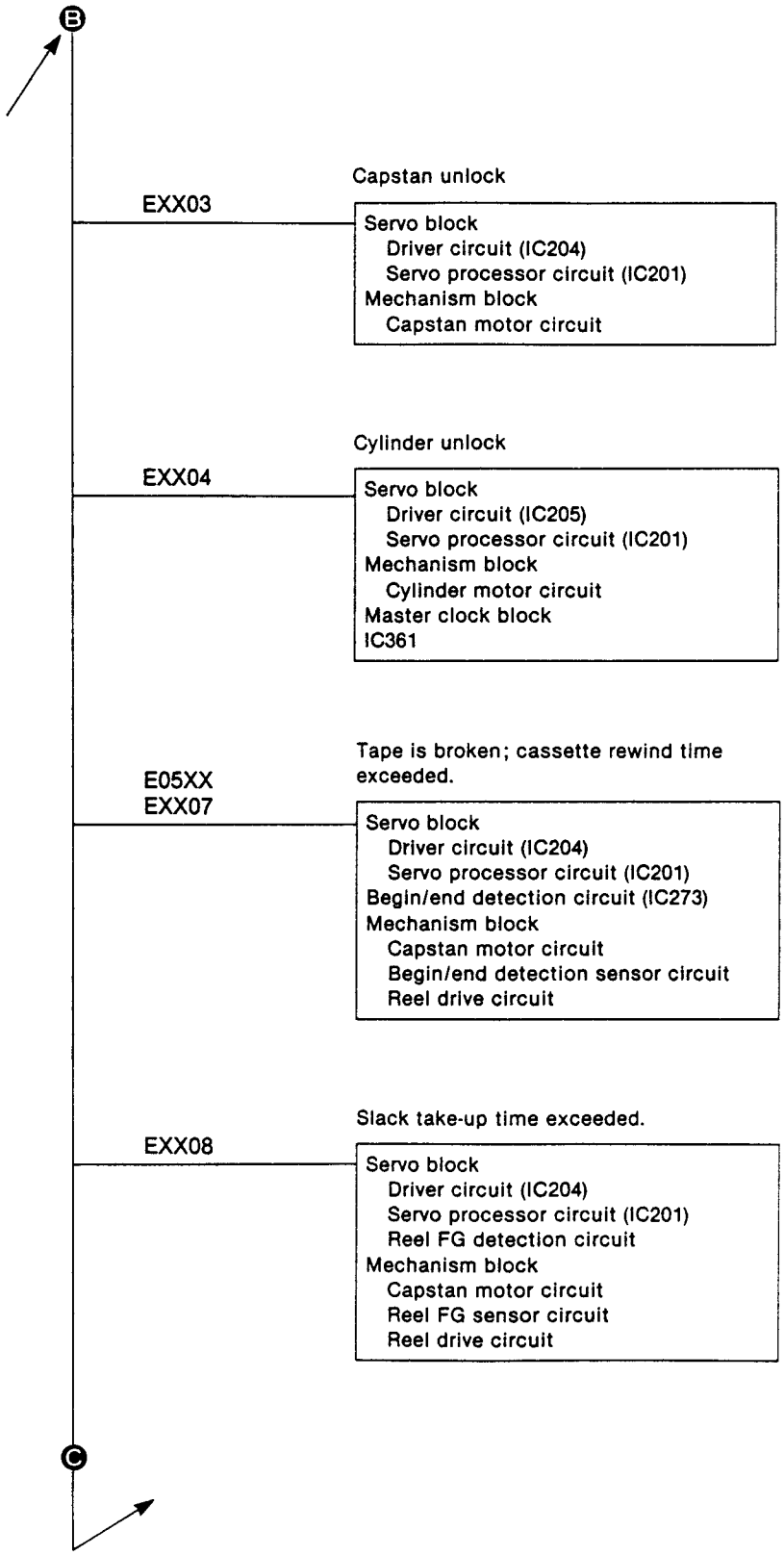

■ TROUBLESHOOTING

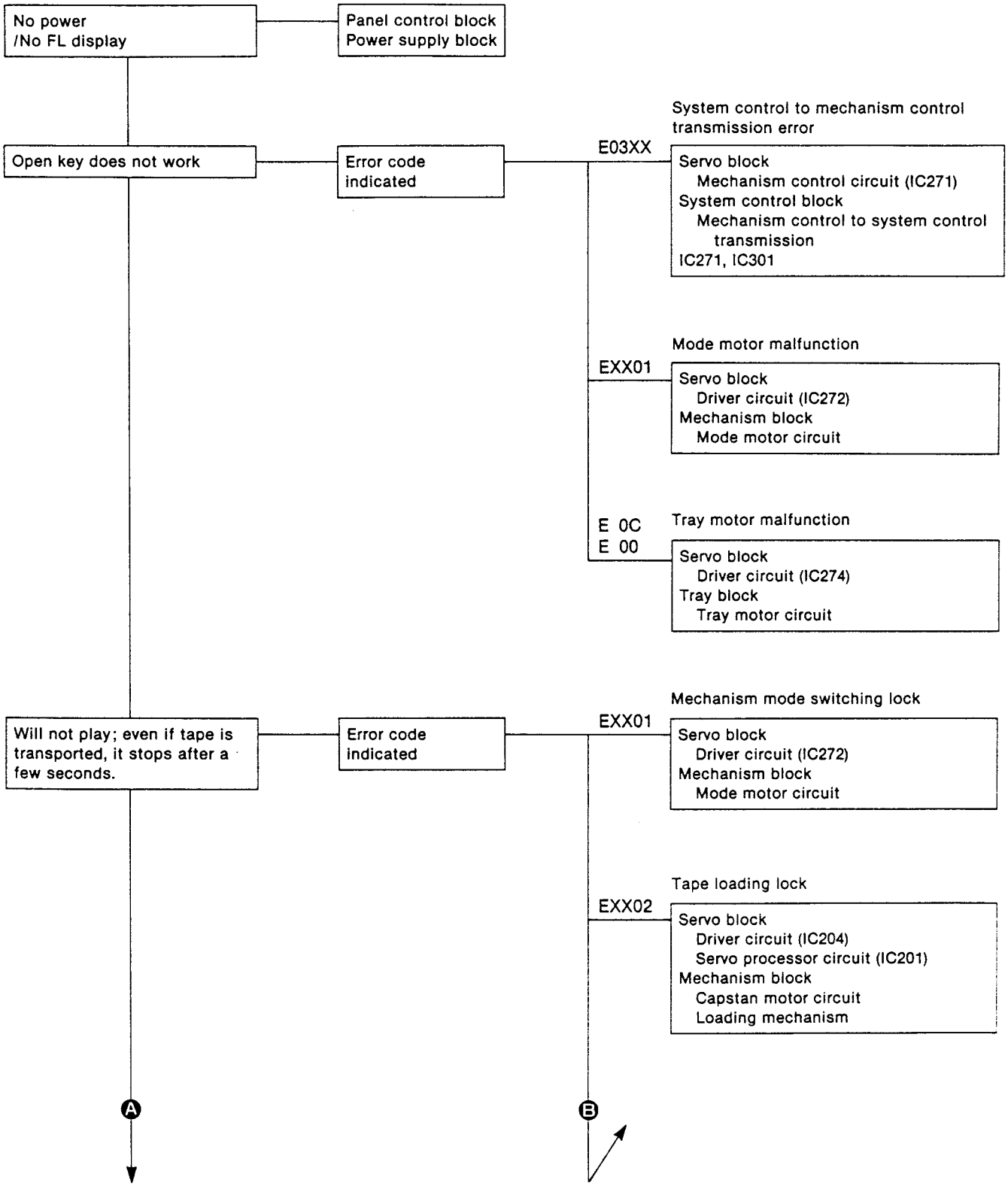

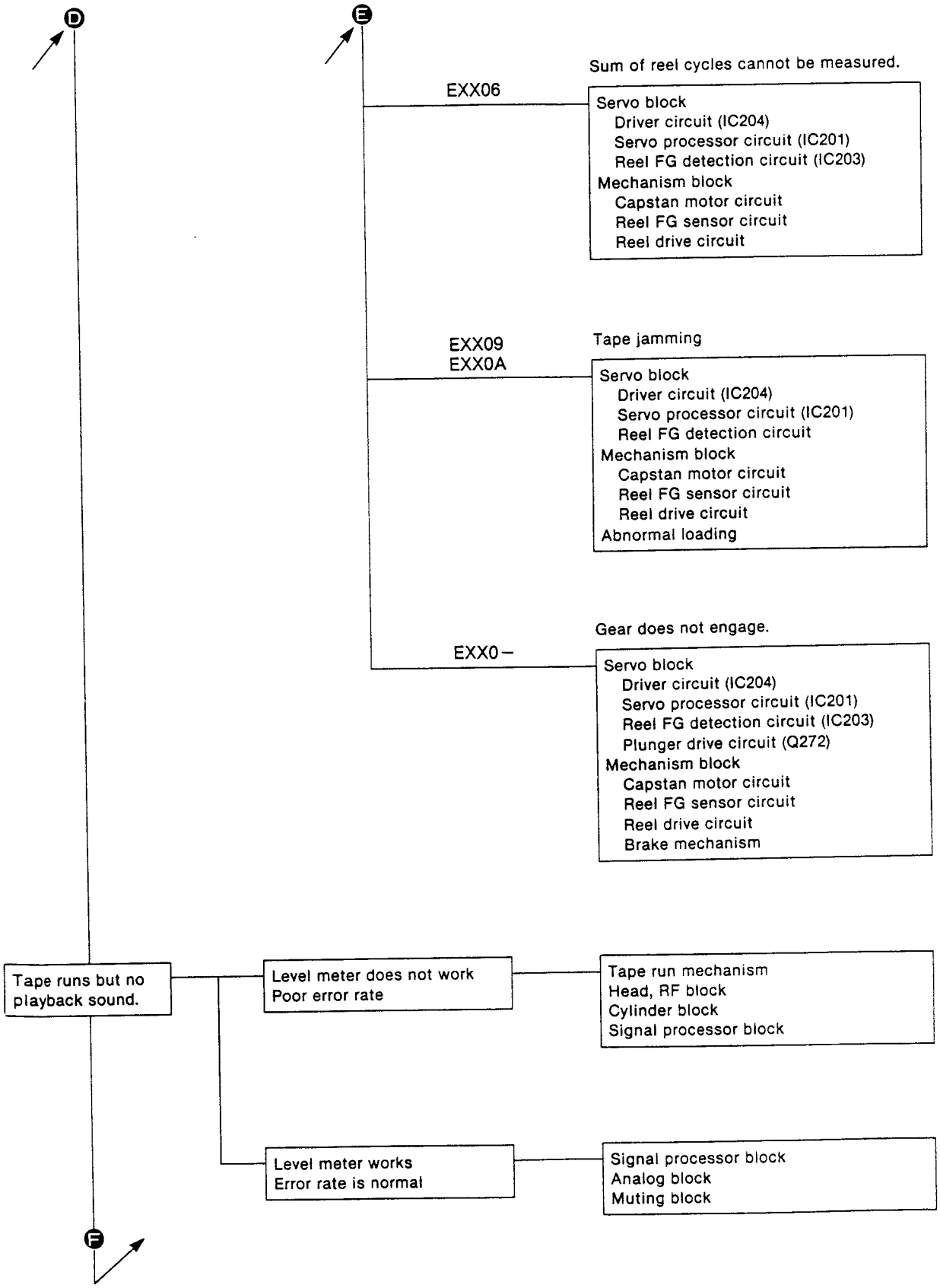

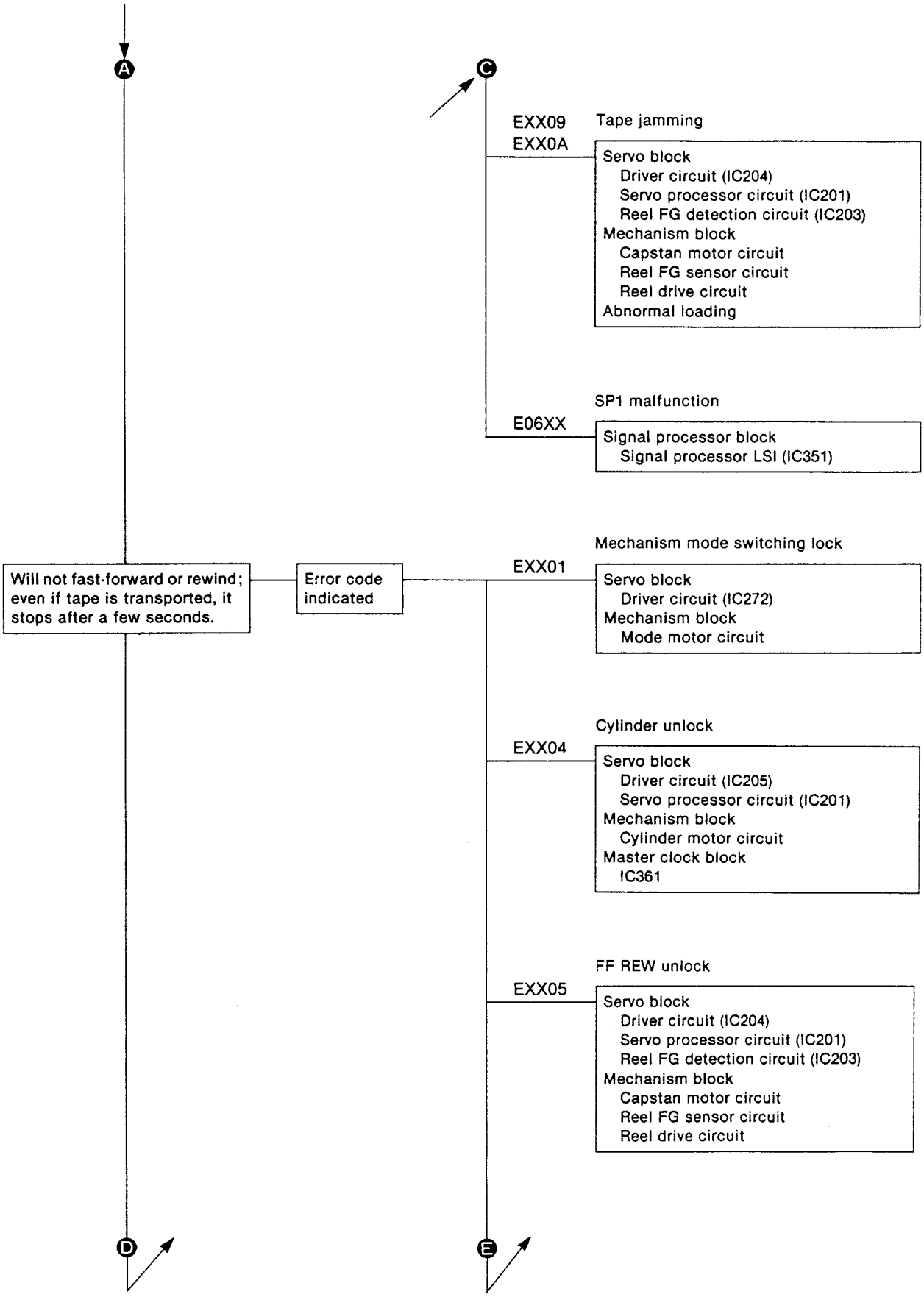
A
C
EXX09
EXX0A
Tape jamming
Servo block
Driver circuit (IC204)
Servo processor circuit (IC201)
Reel FG detection circuit (IC203)
Mechanism block
Capstan motor circuit
Reel FG sensor circuit
Reel drive circuit
Abnormal loading
E06XX
SP1 malfunction
Signal processor block
Signal processor LSI (IC351)
Will not fast-forward or rewind; even if tape is transported, it stops after a few seconds.
Error code indicated
EXX01
Mechanism mode switching lock
Servo block
Driver circuit (IC272)
Mechanism block
Mode motor circuit
EXX04
Cylinder unlock
Servo block
Driver circuit (IC205)
Servo processor circuit (IC201)
Mechanism block
Cylinder motor circuit
Master clock block
IC361
EXX05
FF REW unlock
Servo block
Driver circuit (IC204)
Servo processor circuit (IC201)
Reel FG detection circuit (IC203)
Mechanism block
Capstan motor circuit
Reel FG sensor circuit
Reel drive circuit
D
E

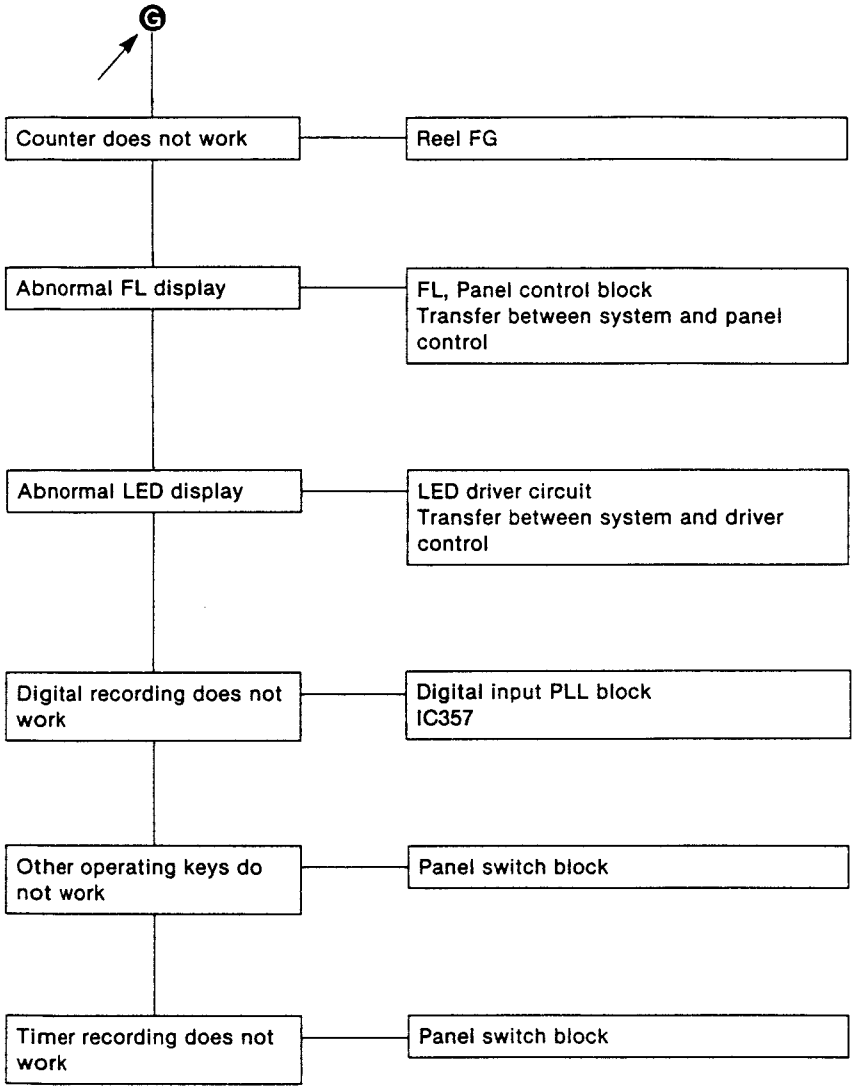
G
Counter does not work
Reel FG
Abnormal FL display
FL, Panel control block
Transfer between system and panel control
Abnormal LED display
LED driver circuit
Transfer between system and driver control
Digital recording does not work
Digital input PLL block
IC357
Other operating keys do not work
Panel switch block
Timer recording does not work
Panel switch block

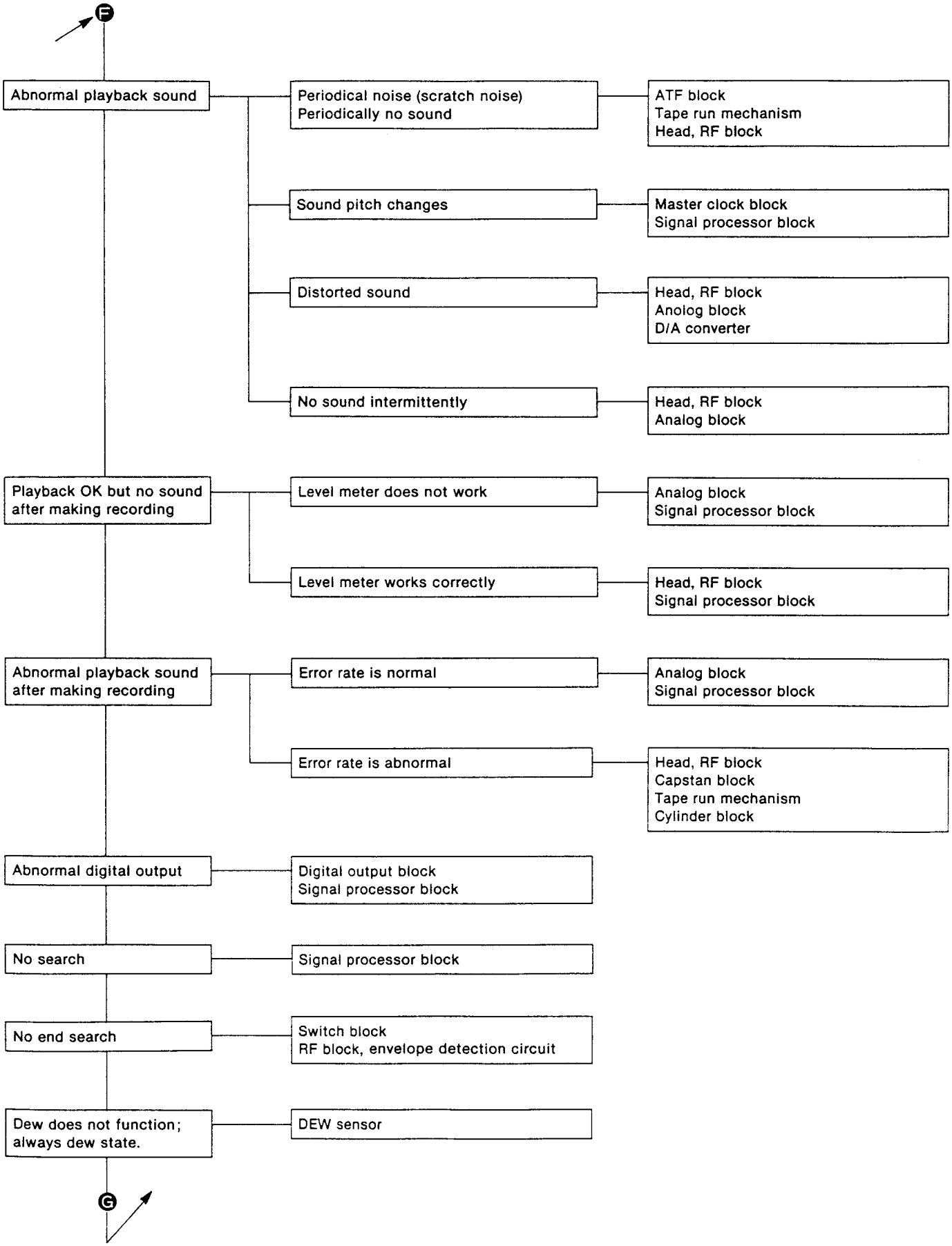

■ ABOUT THE ERROR RATE

If the error rate is normal, it can be judged that everything up to signal processing, meaning the operation of the RF head mechanism, is normal.
Thus, when there is a problem with playback, if the error is normal, it can be assumed that the origin of the problem is in the analog system.

■ ABOUT THE LEVEL METER

Just as for the error rate, if the level meter is operating normally, it indicates that the signal is reaching signal processing.
In other words, if there is no problem with the level meter during playback, it indicates that the head and the RF are outputting the signal.
In addition, if there is no problem with the level meter during recording, it indicates that the analog system (input amplifier and AD) is functioning normally.

■ ERROR RATE DISPLAY FUNCTION

1. Setting the error rate display mode

Simultaneously press the counter mode key, the counter reset key, and the pause key.

Note:

If the counter reset key is released before the other keys, the mode will not change to the error rate display mode.

(1) The digital input mode will be displayed:
If "AES" is displayed, it indicates the AES/EBU mode. If "IEC-2" mode is displayed, it indicates the IEC Type II mode.

2. Changing to the following displays

Press the counter mode key successively.

(2) The error rates for head A and head B will be displayed: FLs A and B will light up (max 9984).
(3) The error rate for head A will be displayed: FL A will light up (max 4992).
(4) The operation modes for the system control (left) and the mechanism control (right) will be displayed.
(5) The error codes for the system control (left) and the mechanism control (right) will be displayed. (If the tray is open, the error codes will be cleared.)
(6) The display will return to (1).

3. Returning to the normal mode

Press the counter reset key: the mode will change to the A time display mode.

■ KEY POINTS FOR TROUBLESHOOTING

Mechanism block
- Loading mechanism
  - Post roller
  - Tension regulator
  - Pinch roller
  - Brake lever
- Brake mechanism
  - Brake lever
  - Solenoid
  - Solenoid driver
- Mechanism switch block
  - Tape hole detection switch
  - Cassette detection switch
  - Holder switch
- Reel FG block
  - Detection photo transistor
  - Detection LED
  - Reel FG amp (servo P.C.B.)
- FPC & FPC connector

Mode motor block
- Mode motor
- Mode switch
- Mode motor driver circuit

Master clock block
- 28MHz oscillator
- 16MHz, 22MHz, 24MHz oscillate and select circuit

Panel switch block
- Switch
- Panel control IC

Head, RF block
- Head FPC & FPC connector
- Head dirty
- Head cracked or damaged
- RF recording current
- Playback eye pattern

Tape begin/end detection block
- Begin/end detection photo transistor
- Begin/end detection LED
- Comparator circuit
- FPC & FPC connector

Power supply block
- Power supply regulator output
- Fuse

Capstan block
- Capstan FG
- FG amp
- Motor driver output
- Motor current

Cylinder block
- Cylinder FG
- Cylinder PG
- FG amp
- PG amp
- Motor driver output
- Motor current

ATF block
- RF ATF output
  - ATF SYNC output
- ATF select circuit
- ATF gate allay

Signal processor block
- Data & clock to D/A
- Data & clock to A/D
- All clocks

Digital output block
- Digital output PB

Panel control block
- Panel control block
- Transfer between panel and system control
- Panel control reset

Analog block
- Input amplifier
- Output amplifier
- Muting circuit
- A/D converter
- D/A converter

REPLACEMENT PARTS LIST

Notes : * Important safety notice:
Components identified by ⚠ mark have special characteristics important for safety. When replacing any of these components use only manufacturer's specified parts.
* The parenthesized indications in the Remarks columns specify the areas. (Refer to the cover page for area.)
Parts without these indications can be used for all areas.

Ref. No.	Part No.	Part Name & Description	Remarks
		INTEGRATED CIRCUIT(S)	
IC11	AN7812F	IC, REGULATOR	
IC12	AN7805F	IC, REGULATOR	
IC13	AN79M20F	IC, REGULATOR	
IC14	AN79L20	IC, REGULATOR	
IC15	M5F78M12L	IC, REGULATOR	
IC16	M5F79M12L	IC, REGULATOR	
IC71	AN79N05	IC, REGULATOR	
IC101	AN7030SE2	IC, RF AMP	
IC102	AN7035SCE2	IC, PLAYBACK PLL	
IC201	MN6742SDR	IC, SERVO PROCESSOR	
IC202	MN53020SDQ	IC, ATF	
IC203	AN8320NFA	IC, LINEAR SERVO	
IC204, 205	AN3841SR	IC, MOTOR DRIVE	
IC206	M5228FPE2	IC, ANALOG SWITCH	
IC207	MN74HC04SE2	IC, INVERTER	
IC208	MN4066BS-T2	IC, ANALOG SWITCH	
IC209	AN78L05ME2	IC, REGULATOR	
IC271	MN17541SDN2	IC, MECHANISM CONTROL	
IC272	AN6607NSE2	IC, MOTOR DRIVE	
IC273	AN1339SE2	IC, VOLTAGE CONTROL	
IC274	TA7291S	IC, TRAY MOTOR CONTROL	
IC275	TC4S81FTX	IC, AND GATE	
IC301	MN188161SDM	IC, SYSTEM CONTROL	
IC302	MN1281R-TA	IC, RESET GENERATOR	
IC351	MN6624	IC, DIGITAL SIGNAL PROCESSOR	
IC352	SRM20256LM10	IC, S. RAM	
IC357	M5238FPE1	IC, DIGITAL INPUT PLL	
IC358, 359	MN74HC00S	IC, NAND GATE	
IC360	CD74HC4046A	IC, DF PLL	
IC361	MN74HCU04S	IC, INVERTER	
IC362	MN74HC163S	IC, BINARY COUNTER	
IC405	AK5326-VP	IC, A/D CONVERTER	
IC407	M5F78M05L	IC, REGULATOR	
IC408	M5F79M05L	IC, REGULATOR	
IC501	YM3404B	IC, DIGITAL FILTER	
IC502	MN53010PEH	IC, SERIAL/PARALLEL CONV.	
IC503-506	PCM56P-J	IC, D/A CONVERTER	
IC507, 508	UPD4053BGT	IC, SAMPLING HOLD	
IC509, 510	M5238FPE1	IC, OP. AMP	
IC511	M5219FPE1	IC, BUFFER	
IC513, 514	SVHHAF0614	IC, L. P. F.	
IC551, 552	M5218L	IC, CLASS AA AMP	
IC601	M50754-165FP	IC, PANEL CONTROL	
IC602	AN6873S	IC, INVERTER	

Ref. No.	Part No.	Part Name & Description	Remarks
IC603	MN74HC04S	IC, INVERTER	
IC901-906	NJM5532MDT	IC, BUFFER AMP	
IC907, 908	NJM5532DD	IC, BUFFER AMP	
IC909	UPD4066BG-T1	IC, ANALOG SWITCH	
IC910	M5M34050FTP2	IC, AES/EBU SELECTOR	
IC911	MN74HC04SE2	IC, INVERTER	
IC912	T74HCU04AFTP	IC, INVERTER	
		TRANSISTOR(S)	
Q102-105	UN5216-Q	TRANSISTOR	
Q106, 107	2SC3937TW	TRANSISTOR	
Q109	UN5216-Q	TRANSISTOR	
Q201	2SB956R	TRANSISTOR	
Q271	2SD1280STW	TRANSISTOR	
Q272	DTA123JKTW	TRANSISTOR	
Q274	2SB709RTW	TRANSISTOR	
Q275	DTC124EKTW	TRANSISTOR	
Q276	DTB113ZKTW	TRANSISTOR	
Q277	DTA114EKTW	TRANSISTOR	
Q301	XN1212TW	TRANSISTOR	
Q311-313	2SC3315CTA	TRANSISTOR	
Q314, 315	XN1112TW	TRANSISTOR	
Q351	XN1212TW	TRANSISTOR	
Q352	2SA1309A-R	TRANSISTOR	
Q353	2SC1047DTA	TRANSISTOR	
Q401	UN4212TA	TRANSISTOR	
Q501	UN4124TA	TRANSISTOR	
Q502	XN1112TW	TRANSISTOR	
Q503, 504	2SC3315CTA	TRANSISTOR	
Q509, 510	2SC3315CTA	TRANSISTOR	
Q511	2SC3311A-Q	TRANSISTOR	
Q512	2SA1309A-R	TRANSISTOR	
Q551-554	2SD1450RTA	TRANSISTOR	
Q601-605	UN4111	TRANSISTOR	
Q1001-1009	UN4114TA	TRANSISTOR	
		DIODE(S)	
D11-15	1SR35200TB	DIODE	⚠
D16	SVDS2V20	DIODE	⚠
D17	1SR35200TB	DIODE	⚠
D18	SVDS2V20	DIODE	⚠
D19	1SR35200TB	DIODE	⚠
D79	1SR35200TB	DIODE	⚠
D201	MA701TX	DIODE	
D203	1N4606TR	DIODE	

■ ERROR CODE TABLE

Error code (Note. 1)	System control error code		Mechanism control error code	
	Processing (Note 2)	Contents	Processing (Note 2)	Contents
1	Test operation	R3CP clock malfunction	Unload	Mechanism mode switching lock
2	Test operation	HSW clock malfunction	Unload	Tape loading lock
3	Transmission omitted	Faulty transmission of the mechanism control	Unload	Capstan unlock
4	Unload	Still protection during operation	Unload	Cylinder unlock
5	Unload	Broken tape	Unload	Reel unlock
6	Unload	Faulty transmission of SP1	Unload	Sum of reel cycles cannot be measured.
7			Unload	In-cassette rewind time exceeded.
8			Unload	Slack tape-up time exceeded.
9			Unload	Tape jamming (Supply side)
A			Unload	Tape jamming (Take-up side)
B (−)			Unload	Gear does not engage.
C			Tray stop	Initial tray setting not possible.
O		——		No error
FF (blank)		No error		——

Note 1: Display mode

E	X1	X2

E: Indicates that mode is the error rate display mode.
X1: System control error code
X2: Mechanism control error code

Note 2: Processing when an error occurs

Test operation:
Internal clock of the system control temporarily connects for operation.

Transmission omitted:
Transmission processing stopped.

Unload:
Tape is unloaded.

Ref. No.	Part No.	Part Name & Description	Remarks
S634	EVQQTG05R	SW, MUSIC SCAN	
S635	EVQQTG05R	SW, OPEN/CLOSE	
S701	EVQWR4002	SW, TAPE HOLE DET.	
S702	EVQWXN001	SW, LOAD DET.	
S703	EVQWXM001	SW, MODE DET.	
S751, 752	SSPD18-1	SW, LEAF (OPEN/CLOSE)	
S901	SSS189	SW, OUTPUT LEVEL SELECTOR	
S902	RST1D001	SW, DIP	
		JACK(S)	
JK1	SJVD06	AC INLET	⚠
JK550	SJJD19	HEADPHONES	
JK1001	QJS1955H	PARALLEL REMOTE	
		CONNECTOR(S) & TERMINAL(S)	
CN1	RHR197ZA	CONNECTOR(10P)	
CN2	SJSD1005	CONNECTOR(10P)	
CN3, 4	RHR197ZA	CONNECTOR(10P)	
CN5	RHR193ZA	CONNECTOR(6P)	
CN6, 7	RJS6T4ZA	CONNECTOR(6P)	
CN10-12	RJP6G27ZA	CONNECTOR(6P)	
CN13	RJS3T4ZA	CONNECTOR(3P)	
CN16	RHR192ZA	CONNECTOR(5P)	
CN18	RJS5T4ZA	CONNECTOR(5P)	
CN21, 22	RJS6Q8ZA	CONNECTOR(6P)	
CN23	RJS4T4ZA	CONNECTOR(4P)	
CN24	RJS3T4ZA	CONNECTOR(3P)	
CN26	RJP8G27ZA	CONNECTOR(8P)	
CN28	SJSD1005	CONNECTOR(10P)	
CN29	RJS5T4ZA	CONNECTOR(5P)	
CN31	RHR192ZA	CONNECTOR(5P)	
CN41	RJP10G27ZA	CONNECTOR(10P)	
CN43, 44	SJSD1721	CONNECTOR(17P)	
CN45	RJP5G27ZA	CONNECTOR(5P)	
CN51	RJP3G27ZA	CONNECTOR(4P)	
CN52-54	RJU051W015	CONNECTOR(15P)	
CN56	RJP4G28ZA	CONNECTOR(4P)	
CN57	RJP6G28ZA	CONNECTOR(6P)	
CN58	RJT036W002	CONNECTOR(2P)	
CN62	RJS7Q11ZA	CONNECTOR(7P)	
CN901, 902	RJJ93MS02	ANALOG IN TERMINAL	
CN903, 904	RJJ93MS01	ANALOG OUT TERMINAL	
CN905	RJJ93MS02	AES/EBU IN TERMINAL	
CN906	RJJ93MS01	AES/EBU OUT TERMINAL	
CN907	SJF3057-7A-1	IEC TYPE2 IN/OUT TERMINAL	
CN911, 912	REZ0294A	CONNECTOR(6P)	
CN913	RHR190ZA	CONNECTOR(3P)	
CN1001	RJS8T4ZA	CONNECTOR(8P)	
CN1002	RHR190ZA	CONNECTOR(3P)	
CN1003	RHR197ZA	CONNECTOR(10P)	

Ref. No.	Part No.	Part Name & Description	Remarks
CN1004	RHR191ZA	CONNECTOR(4P)	
		METER	
HM1001	RSE0001	HOUR METER	
		CONNECTOR ASS'Y	
JCN1	RWJ0710130QQ	CONNECTOR ASS'Y(10P)	
JCN3	RWJ0710110QQ	CONNECTOR ASS'Y(10P)	
JCN5	RWJ0706200QQ	CONNECTOR ASS'Y(6P)	
JCN8	RWJ1006400KQ	CONNECTOR ASS'Y(6P)	
JCN9	REZ0121A	CONNECTOR ASS'Y(6P)	
JCN16	RWJ0705110QQ	CONNECTOR ASS'Y(5P)	
JCN30	RWJ1005230KQ	CONNECTOR ASS'Y(5P)	
JCN31	RWJ1005070KQ	CONNECTOR ASS'Y(5P)	
JCN33	RWJ1008530KQ	CONNECTOR ASS'Y(8P)	
JCN42	REZ0125A	CONNECTOR ASS'Y(10P)	
JCN46	REZ0126A	CONNECTOR ASS'Y(5P)	
JCN56	REZ0127A	CONNECTOR ASS'Y(6P)	
JCN70	REZ0138A-1	CONNECTOR ASS'Y(2P)	
JCN913	RWJ0703230QQ	CONNECTOR ASS'Y(3P)	
JCN1002	RWJ0703230QQ	CONNECTOR ASS'Y(3P)	
JCN1003	RWJ0710150QQ	CONNECTOR ASS'Y(10P)	
JCN1004	RWJ0704150QQ	CONNECTOR ASS'Y(4P)	
		RELAY(S)	
RLY401	AG80239	RELAY	
RLY901, 902	AG80239	RELAY	
		SENSOR	
RM601	SVIHCMD08N	REMOTE CONTROL SENSOR	

Ref. No.	Part No.	Part Name & Description	Remarks
D204	MA151ATW	DIODE	
D271	1S2473TR	DIODE	
D351	RVDSVC321	DIODE	
D401	MA165	DIODE	
D503-506	MA165	DIODE	
D509, 510	MA719TA	DIODE	
D601-603	LN28RCPP-JF	DIODE	
D605	LN31GPH-JF2	DIODE	
D607	LN49YPH-JF1	DIODE	
D608	LN29RPH-JF1	DIODE	
D611-628	MA165	DIODE	
D630-635	MA165	DIODE	
D637-643	MA165	DIODE	
D790	MA165	DIODE	
D901-914	MA165	DIODE	
D915-918	MA719TA	DIODE	
D1001-1009	MA165	DIODE	
		VARIABLE RESISTOR(S)	
VR104, 105	EVNDXAA00B53	V. R, RF RECORDING LEVEL ADJ.	
VR106	EVNDXAA00B14	V. R, RF RECORDING LEVEL ADJ.	
VR107, 108	EVNDXAA00B13	V. R, ATF GAIN ADJ.	
VR201	EVNDXAA00B54	V. R, PG PHASE ADJ.	
VR271	EVNDCAA03B54	V. R, TAPE BEGIN/END DET. ADJ.	
VR401	EVJC51F04703	V. R, REC BALANCE	
VR402	EVJC20F02A24	V. R, REC LEVEL	
VR501, 502	EVNDXAA00B53	V. R, DAC OUTPUT BALANCE ADJ.	
VR503, 504	EVNDXAA00B15	V. R, DAC OFF-SET ADJ.	
VR551	EVU57A022A14	V. R, HEADPHONES LEVEL	
VR601	EVQWVS00004E	V. R, SEARCH DIAL	
		COIL(S)	
L1, 2	SLQX400-D	COIL	⚠
L101	ELJFA470KF	COIL	
L104	ELJFA180KF	COIL	
L106	ELJFA101KF	COIL	
L108	RLQZB471KT-D	COIL	
L109, 110	ELJFA180KF	COIL	
L120	RLQZB101KT-D	COIL	
L202	RLM9R001-Z	COIL	
L203	RLQZB101KT-D	COIL	
L351	RLQZB2R2KT-D	COIL	
L352	RL03B002-M	COIL	
L550-552	EXCELDR35V	COMBINATION PART	
L901-908	EXCELDR35V	COMBINATION PART	
L919-922	EXCELDR35V	COMBINATION PART	
L924, 925	EXCELDR35V	COMBINATION PART	
L1001-1008	EXCELDR35V	COMBINATION PART	
		TRANSFORMER(S)	

Ref. No.	Part No.	Part Name & Description	Remarks
T1	SLT5M523	POWER TRANSFORMER	⚠
T901	RLZ0006-0	TRANSFORMER	
		OSCILLATOR(S)	
X201	RSXC8M00J01T	OSCILLATOR	
X202	RSXY8M00M01T	OSCILLATOR	
X301	RSXY8M00M01T	OSCILLATOR	
X351	RSXC16M3J01	OSCILLATOR	
X352	RSXC22M5J01	OSCILLATOR	
X353	RSXC24M5J01	OSCILLATOR	
X354	RSXA28M2J01	OSCILLATOR	
X601	RSXY6M00M01T	OSCILLATOR	
		DISPLAY TUBE	
FL601	RSL0062-F	DISPLAY TUBE	
		FUSE(S) & HOLDER(S)	
F1	XBA2C02TB0S	FUSE(250V 200mA)	⚠
F2	XBA2C04TB0S	FUSE(250V 400mA)	⚠
		SWITCH(ES)	
S1	ESB8249V	SW, POWER	⚠
S2	ESE37263	SW, VOLTAGE SELECTOR	⚠
S601	ESD1511201	SW, SAMPLING FREQ. SELECTOR	
S602	ESB64801	SW, ANALOG/DIGITAL SELECTOR	
S611	EVQQTG05R	SW, ERASE	
S612	EVQQTG05R	SW, END SEARCH	
S613	EVQQTG05R	SW, START ID	
S614	EVQQTG05R	SW, SKIP ID	
S615	EVQQTG05R	SW, END	
S616	EVQQTG05R	SW, COUNTER RESET	
S617	EVQQTG05R	SW, RENUMBER	
S618	EVQQTG05R	SW, REW	
S619	EVQQTG05R	SW, FF	
S620	EVQQTG05R	SW, FADE OUT	
S621	EVQQTG05R	SW, FADE IN	
S622	EVQQTG05R	SW, AUTO PNO	
S623	EVQQTG05R	SW, COUNTER MODE	
S624	EVQQTG05R	SW, REVERSE SKIP	
S625	EVQQTG05R	SW, FORWARD SKIP	
S626	EVQQTG05R	SW, PAUSE	
S627	EVQQTG05R	SW, REC	
S628	EVQQTG05R	SW, AUTO REC MUTE	
S630	EVQQTG05R	SW, WRITE	
S631	EVQQTG05R	SW, PLAY	
S632	EVQQTG05R	SW, STOP	
S633	EVQQTG05R	SW, SKIP PLAY CANCEL	

■ EXPLODED VIEWS

• **Cabinet and chassis parts**

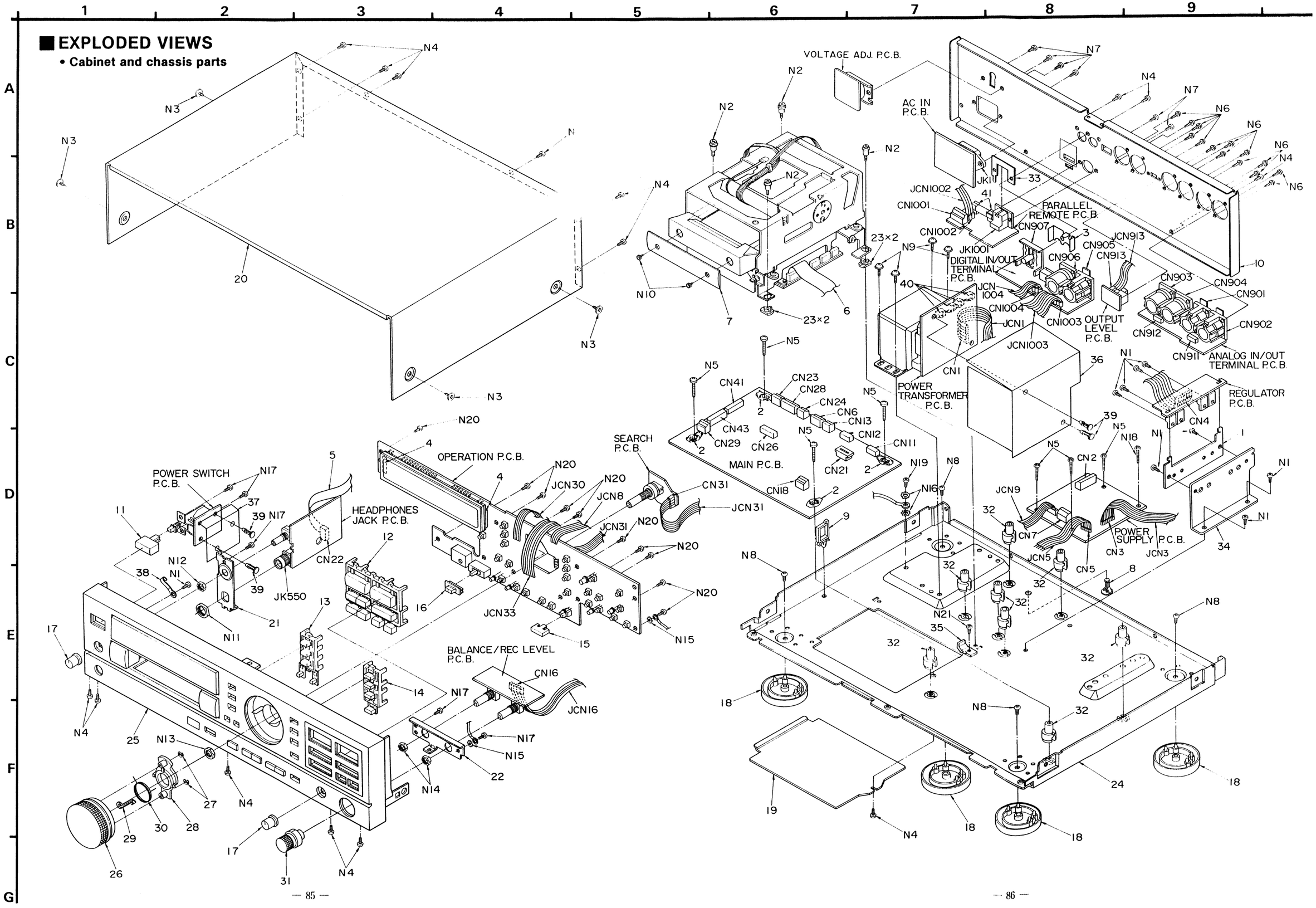

• **Loading parts**

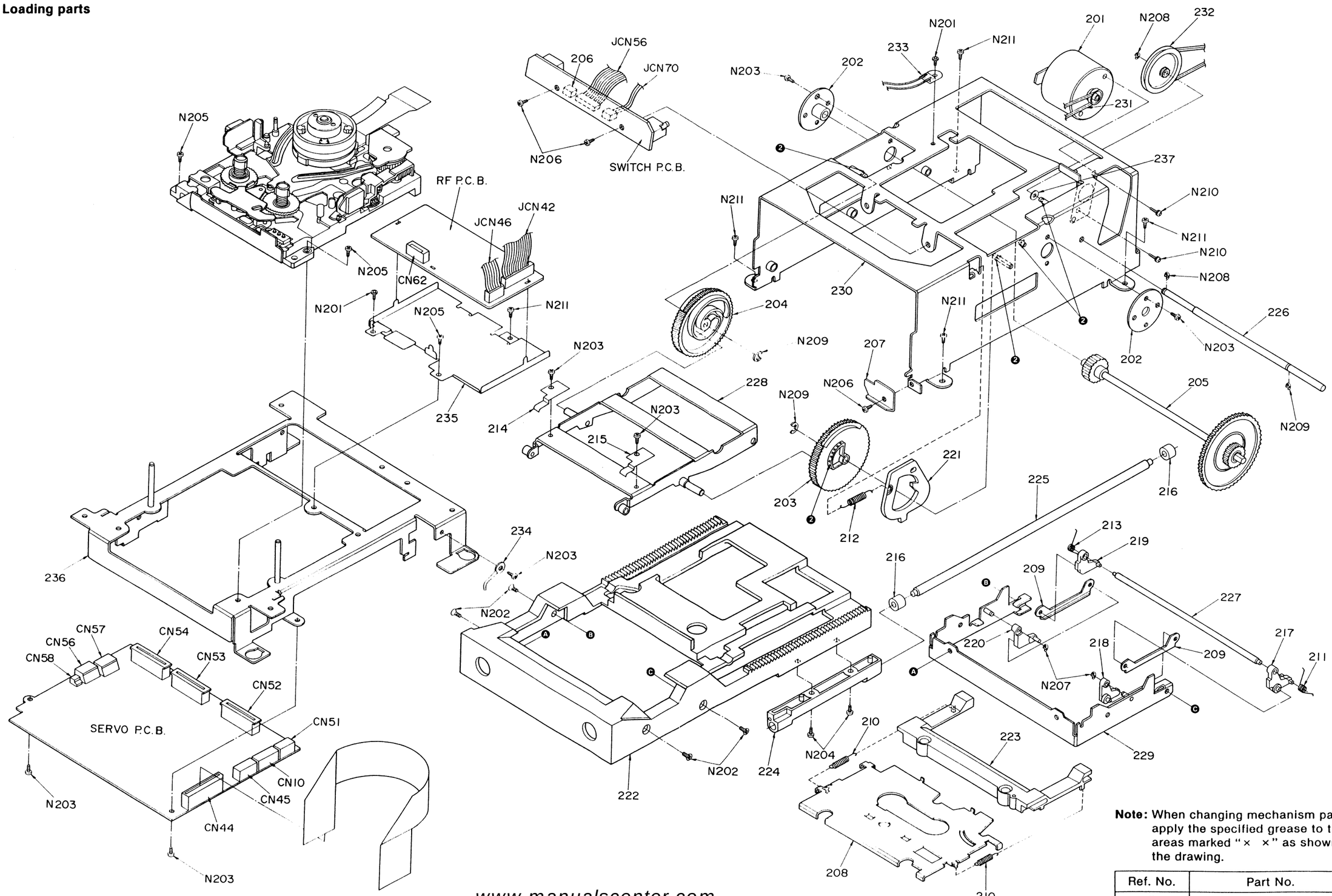

Note: When changing mechanism parts, apply the specified grease to the areas marked "× ×" as shown in the drawing.

Ref. No.	Part No.
❷	SZZ0L26

16 17 18 19

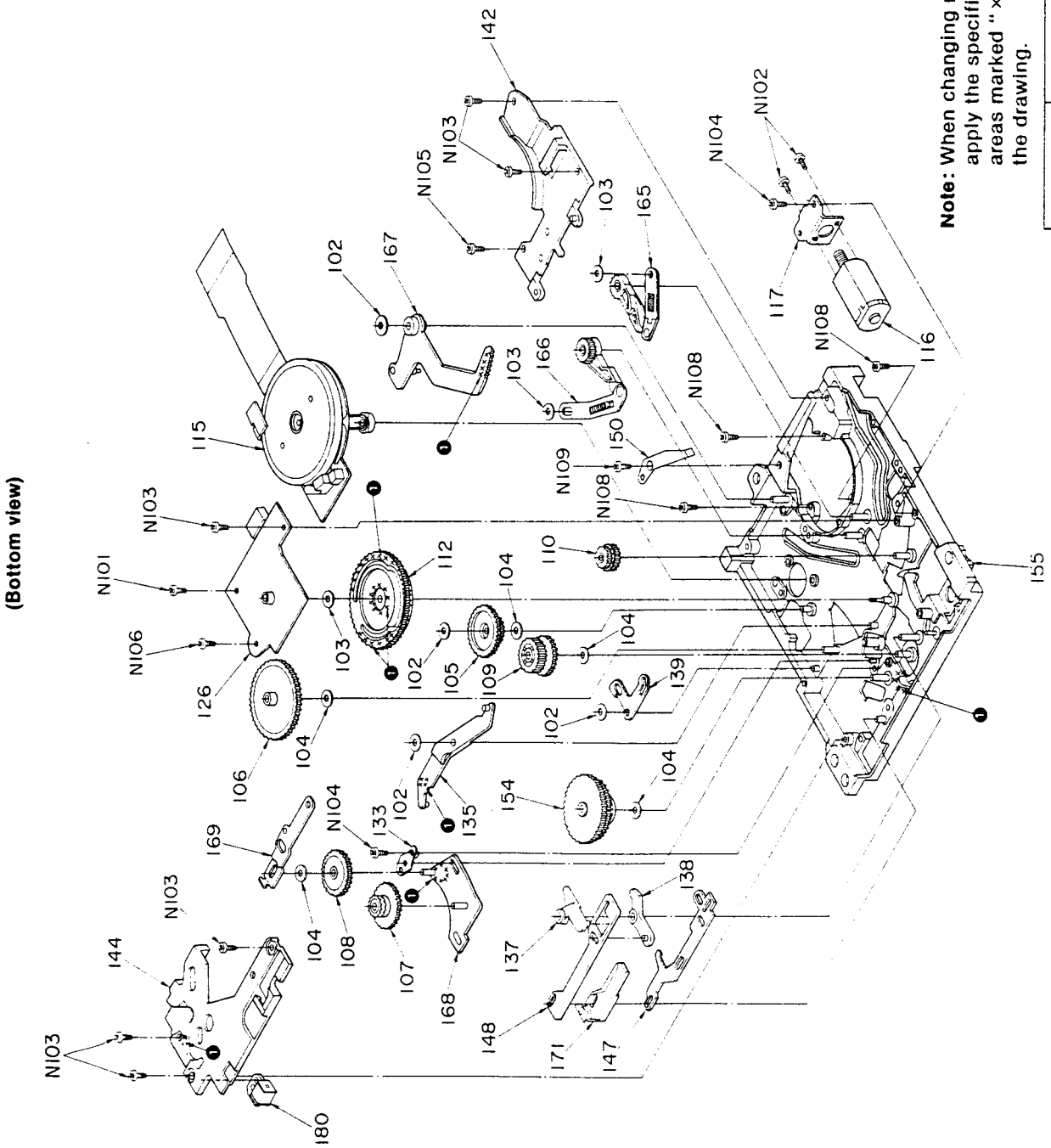

Note: When changing mechanism parts, apply the specified grease to the areas marked "× ×" as shown in the drawing.

Ref. No.	Part No.
❶	RZZ0L05

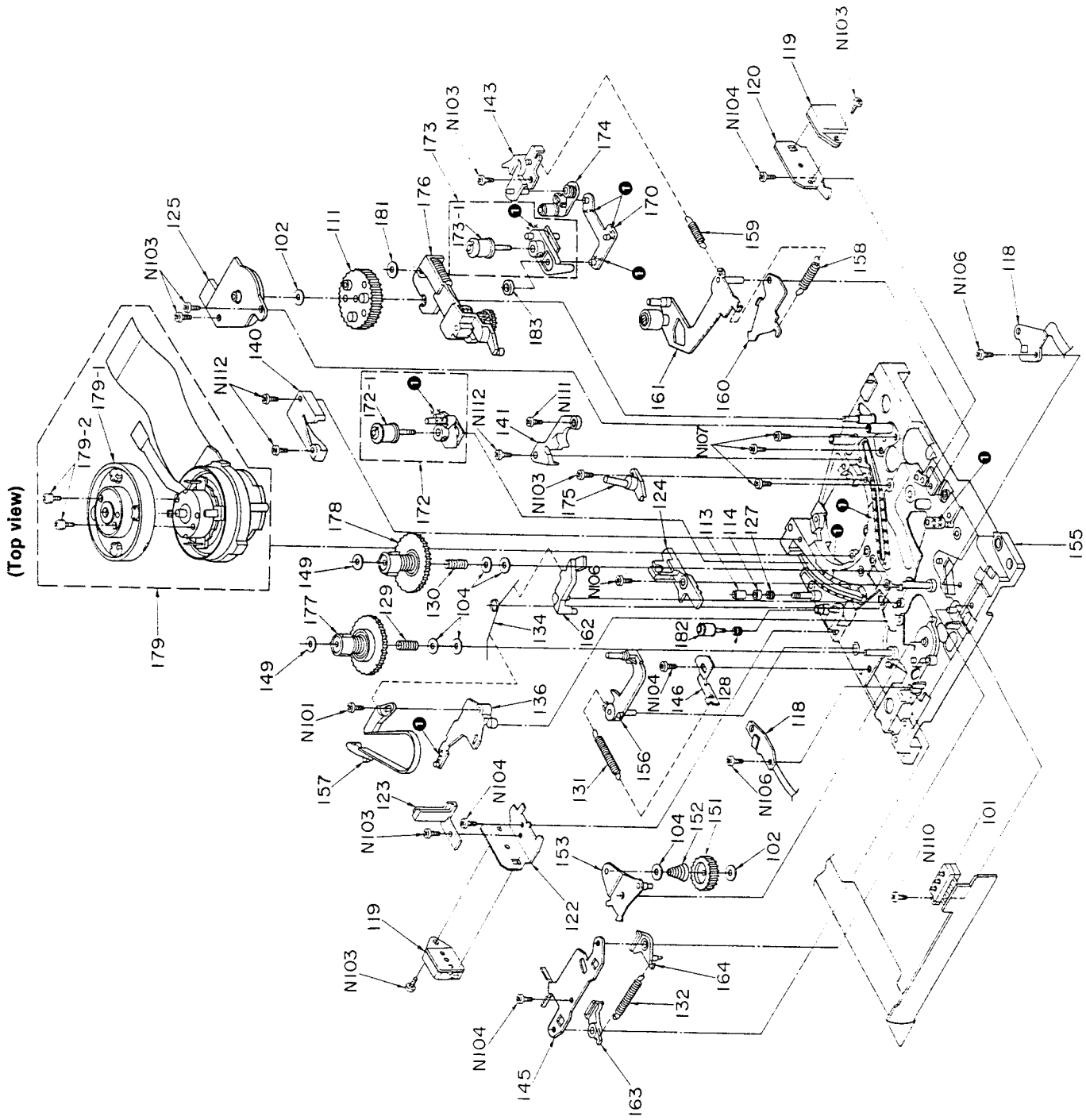

• Mechanism parts (RAA1001)

Ref. No.	Part No.	Part Name & Description	Remarks
125	EVQWXN001	LOAD SW ASS'Y	
126	EVQWXM001	MODE SW ASS'Y	
127	RMB0061	SPRING, FIXED POST	
128	RMB0063	SPRING, GUIDE ROLLER	
129	RMB0071	SPRING, S. REEL	
130	RMB0073-1	SPRING, T. REEL	
131	RMB0074	SPRING, TENSION	
132	RMB0075	SPRING, BRAKE	
133	RMC0034	ANGLE	
134	RME0037-1	SPRING, BT	
135	RML0088	LEVER, PINCH	
136	RML0090	LEVER, TENSION	
137	RML0094	LEVER, S. BRAKE	
138	RML0095	LEVER, T. BRAKE	
139	RML0103	LEVER, LOAD SELECT	
140	RMQ0052	S. STOPPER	
141	RMQ0053	T. STOPPER	
142	RMQ0055	LOAD GUIDE HOLDER	
143	RMQ0056-1	GUIDE ARM STOPPER	
144	RMQ0058	MODE GUIDE PLATE	
145	RMQ0062	IDLER GUIDE	
146	RMQ0063	TENSION SPRING HOOK	
147	RMQ0064-1	S. BRAKE DRIVE PALTE	
148	RMQ0065-1	T. BRAKE DRIVE PLATE	
149	RNW172ZA	WASHER	
150	RUS740ZA	EARTH ANGLE	
151	RDG0071	IDLER GEAR	
152	RMB0069-1	IDLER SPRING	
153	RXL0051	IDLER ARM ASS'Y	
154	RXG0011-2	DRIVE GEAR	
155	RXK0019	CHASSIS UNIT	
156	RXL0035-4	TENSION ARM ASS'Y	
157	RXL0036	TENSION BAND ASS'Y	
158	RMB0066	PIN-PRESSURE SPRING	
159	RMB0067	PINCH ROLLER SPRING	
160	RMM0036	PIN-PRESSURE LINK	
161	RXL0046	PINCH ARM ASS'Y	
162	RXL0048	BT LEVER ASS'Y	
163	RXL0049	S. BRAKE ASS'Y	
164	RXL0050	T. BRAKE ASS'Y	
165	RXL0052-1	S. LOAD ARM	
166	RXL0054-1	T. LOAD ARM	
167	RXL0056-2	LOAD LEVER	
168	RXL0057	P. F. IDLER ASS'Y	
169	RXL0058	LEVER, P. F. SELECTION	
170	RXM0018	GUIDE LINK ASS'Y	
171	RXM0019	PLUNGER LINK ASS'Y	
172	RXP0016-2	S. POST ROLLER ASS'Y	
172-1	RXP0008	POST ROLLER	
173	RXP0017-1	T. POST ROLLER ASS'Y	
173-1	RXP0008	POST ROLLER	
174	RXP0020-1	T. GUIDE ROLLER	

Ref. No.	Part No.	Part Name & Description	Remarks
175	RXQ0057	T. INCLINED BASE ASS'Y	
176	RXQ0079-1	LOAD HOLDER ASS'Y	
177	RXR0006	S. REEL ASS'Y	
178	RXR0007	T. REEL ASS'Y	
179	VEG0752-1	CYLINDER UNIT	
179-1	VEH0460	UPPER CYLINDER	
179-2	VHD0593	SCREW	
180	RSJ0006	PLUNGER	
181	QBW2081A	WASHER	
182	RXP0027	GUIDE ROLLER	
183	RHW12009	GUIDE WASHER	
		SCREWS	
N101	QHQ1371	SCREW	
N102	XQN14+C16	SCREW	
N103	RHQ0014	SCREW	
N104	RHQ0007	SCREW	
N105	RHQ0015	SCREW	
N106	RHQ0016	SCREW	
N107	RHQ0017	SCREW	
N108	XQN16+A45T	SCREW	
N109	XQN2+A2	SCREW	
N110	RHQ0018	SCREW	
N111	RHQ0019	SCREW	
N112	RHQ0020	SCREW	
		LOADING PARTS	
201	RFKPVDA10-K	MOTOR ASS'Y	
202	RDB0032	HOLDER, GEAR SHAFT	
203	RDG0120-2	MAIN GEAR	
204	RDG0122-1	MAIN GEAR	
205	RFKNVDA10BK	GEAR SHAFT ASS'Y	
206	RJP2G27ZA	CONNECTOR(CN72)	
207	RMA0194	SHAFT FRAME	
208	RMA0197	ANGLE, CASSETTE HOLDER	
209	RMA0200	HOLDER ARM	
210	RMB0110	SPRING	
211	RMB0111	SPRING	
212	RMB0131	SPRING	
213	RMB0144	SPRING	
214	RMC0050	ANGLE	
215	RMC0051	ANGLE	
216	RMG0090	RUBBER	
217	RML0139-1	HOLDER, SHAFT	
218	RML0140-1	HOLDER	
219	RML0141-1	HOLDER, SHAFT	
220	RML0142-1	HOLDER	
221	RML0150-1	HOLDER, MAIN GEAR	
222	RMR0206	TRAY	
223	RMR0207	CASSETTE HOLDER	

■ REPLACEMENT PARTS LIST

Notes : * Important safety notice:
Components identified by ⚠ mark have special characteristics important for safety. When replacing any of these components use only manufacturer's specified parts.
* The parenthesized indications in the Remarks columns specify the areas. (Refer to the cover page for area.)
Parts without these indications can be used for all areas.

Ref. No.	Part No.	Part Name & Description	Remarks
		CABINET AND CHASSIS	
1	RMY0030	RADIATOR	
2	SNE1004-1	GND PLATE	
3	SMN2080	EARTH PLATE	
4	RMA0202	FL HOLDER	
5	REZ0136A	CONNECTOR	
6	REZ0137A	CONNECTOR	
7	RGK0165A-H	TRAY ORNAMENT	
8	RGQ0059	CARD SPACER	
9	RGQ0046	WIRE SADDLE	
10	RFKHV3700EBH	REAR PANEL ASS'Y	
11	RGU0030A	BUTTON, POWER	
12	RGU0235-H	BUTTON, OPERATION A	
13	RGU0236-H	BUTTON, OPERATION B	
14	RGU0237-H	BUTTON, OPERATION C	
15	RGU0238	BUTTON, SWITCH	
16	RGV0033	KNOB, SAMPLING FREQUENCY	
17	RGW0055	KNOB, BALANCE/H. P LEVEL	
18	RKA0009-K	FOOT	
19	RKF0089	HOLDER(SERVO P. C. B.)	
20	RKM0076-H	CABINET	
21	RMA0192	HOLDER(HEADPHONES)	
22	RMA0193	HOLDER(BALANCE/REC LEVEL)	
23	RMG0134	MECHANISM SUPPORT	
24	RMK0068-2	CHASSIS	
25	RFKGV3700PH	FRONT PANEL ASS'Y	
26	RFKNV3700PH	SHUTTLE KNOB ASS'Y	
27	CSTW-2	RING	
28	SHRD202	RESIN PARTS	
29	SHR9451	SPRING	
30	SUSD162-1	SPRING	
31	RYQ0049-1	KNOB, REC LEVEL	
32	SHE185-1	P. C. B. SUPPORT	
33	RMA0408	ANGLE	
34	RMY0047-1	RADIATOR	
35	RMC0117	EARTH PLATE	
36	RMZ0095-1	INSULATION SHEET(A)	
37	RMZ0096	INSULATION SHEET(B)	
38	SHR330	BINDER	
39	SHR9815	RIVET	
40	SJT347	FUSE HOLDER	
41	SJT345	HOUR METER HOLDER	
		SCREWS	

Ref. No.	Part No.	Part Name & Description	Remarks
N1	XTB3+8J	SCREW	
N2	SHDD4-1	SCREW	
N3	SNE2095-5	SCREW	
N4	XTBS3+8JFZ1	SCREW	
N5	XTB3+16JFR	SCREW	
N6	XSN26+4FZ	SCREW	
N7	XTBS3+8FFZ1	SCREW	
N8	XTV3+6G	SCREW	
N9	XTW3+6T	SCREW	
N10	XVE3A4FP	SCREW	
N11	XNS12	NUT	
N12	XNS7S	NUT	
N13	XNS8S	NUT	
N14	XNS9	NUT	
N15	XWC3B	WASHER	
N16	XWC4B	WASHER	
N17	XTB3+8GFR	SCREW	
N18	XYA3+CJ16FR	SCREW	
N19	XTB4+8F	SCREW	
N20	XTB3+10GFR	SCREW	
N21	XTB3+6F	SCREW	
		MECHANISM PARTS	
101	EVQWR4002	CASSETTE SW.	
102	QBW2008	WASHER	
103	QBW2030	WASHER	
104	QBW2059	WASHER	
105	RDG0066-1	MAIN GEAR A	
106	RDG0067	MAIN GEAR B	
107	RDG0068	IDLER GEAR(P)	
108	RDG0069	IDLER GEAR(F)	
109	RDG0070	COUNTER GEAR	
110	RDG0073-1	MODE REPEATING GEAR	
111	RDK0006-1	LOAD CAM	
112	RDK0007-1	MODE CAM	
113	RDP0020	FIXED POST	
114	RDP0021	FIXED POST FLANGE	
115	REM0001	CAPSTAN UNIT	
116	REM0009	MODE MOTOR ASS'Y	
117	RMN0028	HOLDER, MODE MOTOR	
118	REQ0012	INTERFACE P. C. B.	
119	REQ0014	BEGIN/END DET. SENSOR ASS'Y	
120	RMN0030	BEGIN DET. ANGLE	
122	RMN0029	END DET. ANGLE	
123	RMQ0059	LEAD OPENER	
124	REQ0018	BEGIN/END DET. LED ASS'Y	

■ RESISTORS & CAPACITORS

Notes : * Capacity valuse are in microfarads (uF) unless specified otherwise, P=Pico-farads(pF) F=Farads(F)
* Resistance values are in ohms, unless specified otherwise, 1K=1,000(OHM) , 1M=1,000k(OHM)

Ref. No.	Part No.	Values & Remarks
		RESISTORS
R11	ERDS2TJ392T	1/4W 3.9K
R12	ERD25FJ102	1/4W 1K ⚠
R13, 14	ERG1ANJP560S	1W 56
R101, 102	ERJ6GEYJ221V	1/10W 220
R103, 104	ERJ6GEYJ681V	1/10W 680
R112, 113	ERJ6GEYJ332V	1/10W 3.3K
R115	ERJ6GEYJ332V	1/10W 3.3K
R117	ERJ6GEYJ102V	1/10W 1K
R118	ERJ6GEYJ471V	1/10W 470
R123	ERJ6GEYJ822V	1/10W 8.2K
R124	ERJ6GEYJ152V	1/10W 1.5K
R126	ERJ6GEYJ152V	1/10W 1.5K
R128	ERJ6GEYJ822V	1/10W 8.2K
R131	ERJ6GEYJ331V	1/10W 330
R132, 133	ERJ6GEYJ221V	1/10W 220
R134	ERJ6GEYJ102V	1/10W 1K
R135, 136	ERJ6GEYJ471V	1/10W 470
R150	ERJ6GEYJ102V	1/10W 1K
R151, 152	ERJ6GEYJ471V	1/10W 470
R153	ERJ6GEYJ223V	1/10W 22K
R154, 155	ERJ6GEYJ471V	1/10W 470
R156, 157	ERJ6GEYJ222V	1/10W 2.2K
R158	ERJ6GEYJ102V	1/10W 1K
R159	ERJ6GEYJ223V	1/10W 22K
R160	ERJ6GEYJ221V	1/10W 220
R162	ERJ6GEYJ472V	1/10W 4.7K
R164, 165	ERJ6GEYJ472V	1/10W 4.7K
R167	ERJ6GEYJ332V	1/10W 3.3K
R168	ERJ6GEYJ102V	1/10W 1K
R169	ERJ6GEYJ471V	1/10W 470
R172	ERJ6GEYJ102V	1/10W 1K
R173, 174	ERJ6GEYJ222V	1/10W 2.2K
R175	ERJ6GEYJ151V	1/10W 150
R176	ERJ6GEYJ104V	1/10W 100K
R178	ERJ6GEYJ820V	1/10W 82
R181	ERJ6GEYJ331V	1/10W 330
R193-195	ERJ6GEYJ102V	1/10W 1K
R196	ERJ6GEYJ103V	1/10W 10K
R197	ERJ6GEYJ102V	1/10W 1K
R201	ERJ6GEYJ102V	1/10W 1K
R202, 203	ERJ6GEYJ223V	1/10W 22K
R204	ERJ6GEYJ103V	1/10W 10K
R205	ERJ6GEYJ683V	1/10W 68K
R206	ERJ6GEYJ684V	1/10W 680K
R207	ERJ6GEYJ472V	1/10W 4.7K
R208	ERJ6GEYJ683V	1/10W 68K
R209	ERJ6GEYJ153V	1/10W 15K
R210	ERJ6GEYJ102V	1/10W 1K
R212	ERJ6GEYJ105	1/10W 1M
R213	ERJ6GEYJ274V	1/10W 270K
R214	ERJ6GEYJ682V	1/10W 6.8K
R215	ERJ6GEYJ184V	1/10W 180K
R216	ERJ6GEYJ101V	1/10W 100
R217, 218	ERJ6GEYJ472V	1/10W 4.7K
R219, 220	ERJ6GEYJ103V	1/10W 10K
R221, 222	ERJ6GEYJ474V	1/10W 470K
R223, 224	ERJ6GEYJ222V	1/10W 2.2K
R225, 226	ERJ6GEYJ184V	1/10W 180K
R227	ERJ6GEYJ102V	1/10W 1K
R228	ERJ6GEYJ222V	1/10W 2.2K
R229	ERJ6GEYJ103V	1/10W 10K
R230	ERJ6GEYJ681V	1/10W 680
R231	ERJ6GEYJ821V	1/10W 820
R232	ERJ6GEYJ333V	1/10W 33K
R233	ERJ6GEYJ393V	1/10W 39K
R234	ERJ6GEYJ333V	1/10W 33K
R235	ERJ6GEYJ473V	1/10W 47K
R236	ERJ6GEYJ332V	1/10W 3.3K
R237	ERX12SJR33E	1/2W 0.33
R240	ERJ6GEYJ151V	1/10W 150
R241	ERJ6GEYJ333V	1/10W 33K
R242	ERJ6GEYJ103V	1/10W 10K
R243	ERJ6GEYJ473V	1/10W 47K
R244	ERJ6GEYJ102V	1/10W 1K
R245	ERX12SJR33E	1/2W 0.33
R247	ERJ6GEYJ331V	1/10W 330
R248	ERJ6GEYJ822V	1/10W 8.2K
R249	ERJ6GEYJ472V	1/10W 4.7K
R250	ERJ6GEYJ153V	1/10W 15K
R251	ERJ6GEYJ104V	1/10W 100K
R271, 272	ERJ6GEYJ103V	1/10W 10K
R273	ERJ6GEYJ681V	1/10W 680
R274	ERSB39JR82U	1/4W 0.82
R275	ERJ6GEYJ473V	1/10W 47K
R277, 278	ERJ6GEYJ333V	1/10W 33K
R279	ERJ6GEYJ683V	1/10W 68K
R280	ERJ6GEYJ333V	1/10W 33K
R281	ERJ6GEYJ332V	1/10W 3.3K
R282	ERJ6GEYJ682V	1/10W 6.8K
R284	ERJ6GEYJ103V	1/10W 10K
R285	ERJ6GEYJ104V	1/10W 100K
R286	ERJ6GEYJ103V	1/10W 10K
R287	ERJ6GEYJ684V	1/10W 680K
R289, 290	ERJ6GEYJ473V	1/10W 47K
R292, 293	ERJ6GEYJ563V	1/10W 56K
R294-296	ERJ6GEYJ473V	1/10W 47K
R297	ERJ6GEYJ220	1/10W 22
R298	ERJ6GEYJ473V	1/10W 47K
R301-306	ERJ6GEYJ332V	1/10W 3.3K
R309-312	ERJ6GEYJ332V	1/10W 3.3K
R313	ERJ6GEYJ331V	1/10W 330
R314-320	ERJ6GEYJ561V	1/10W 560
R321	ERJ6GEYJ331V	1/10W 330
R322	ERJ6GEYJ561V	1/10W 560
R323	ERJ6GEYJ473V	1/10W 47K
R324	ERJ6GEYJ331V	1/10W 330
R325	ERJ6GEYJ561V	1/10W 560
R326	ERJ6GEYJ332V	1/10W 3.3K
R331-333	ERJ6GEYJ105	1/10W 1M
R334-336	ERJ6GEYJ561V	1/10W 560
R337-339	ERJ6GEYJ102V	1/10W 1K
R340	ERJ6GEYJ332V	1/10W 3.3K
R341	ERJ6GEYJ561V	1/10W 560
R342	ERJ6GEYJ103V	1/10W 10K
R343	ERJ6GEYJ331V	1/10W 330
R344	ERJ6GEYJ223V	1/10W 22K
R351, 352	RRJ6GCAD822T	1/10W 8.2K
R354	RRJ6GCAD822T	1/10W 8.2K
R355	ERJ6GEYJ102V	1/10W 1K
R356-358	ERJ6GEYJ103V	1/10W 10K
R359	ERJ6GEYJ102V	1/10W 1K
R360	RRJ6GCAD183T	1/10W 18K
R361	RRJ6GCAD153T	1/10W 15K
R362	ERJ6GEYJ331V	1/10W 330
R363	ERJ6GEYJ103V	1/10W 10K
R364	ERJ6GEYJ105	1/10W 1M
R365	ERJ6GEYJ331V	1/10W 330
R366	RRJ6GCAD683T	1/10W 68K
R367	ERJ6GEYJ331V	1/10W 330
R368	ERJ6GEYJ561V	1/10W 560
R409, 410	ERDAS3J102T	1/4W 1K
R411, 412	ERDAS3J273T	1/4W 27K
R413, 414	ERDAS3J472T	1/4W 4.7K
R415, 416	ERDAS3J273T	1/4W 27K
R417	ERJ6GEYJ331V	1/10W 330
R419, 420	ERJ6GEYJ560V	1/10W 56
R421-424	ERJ6GEYJ225V	1/10W 2.2M
R447	ERJ6GEYJ561V	1/10W 560
R500	ERJ6GEYJ102V	1/10W 1K
R503-508	ERJ6GEYJ102V	1/10W 1K
R509, 510	ERJ6GEYJ473V	1/10W 47K
R517-520	ERDAS3J472T	1/4W 4.7K
R521, 522	ERDS2TJ682T	1/4W 6.8K
R523, 524	ERDS2TJ103	1/4W 10K

Ref. No.	Part No.	Part Name & Description	Remarks
224	RMR0209-1	SHAFT ANGLE	
225	RMS0158-1	SHAFT	
226	RMS0160	SHAFT	
227	RMS0165	SHAFT	
228	RXA0046	SUB FRAME	
229	RXA0047	CASSETTE HOLDER	
230	RXK0059	FRAME	
231	SMQ20025	BELT	
232	SMQ40032	PULLEY GEAR	
233	EYH-S78A4	DEW SENSOR	
234	SHE36-3	EARTH TERMINAL	
235	RSC0066	SHIELD PLATE	
236	RXA0060	MECHANISM FRAME	
237	RMX0044	WASHER	
		SCREWS	
N201	XSN2+3	SCREW	
N202	XSS26+4FZ	SCREW	
N203	XTB3+6J	SCREW	
N204	XTN3+10G	SCREW	
N205	XTN3+6F	SCREW	
N207	XUC15FT	WASHER	
N208	XUC2FT	WASHER	
N209	XUC3FT	WASHER	
N210	XYN26+C33	SCREW	
N211	XTB3+6F	SCREW	
		PACKING MATERIAL	
P1	RPG0860	PACKING CASE	
P2	RPN0391-1	PAD	
P3	RPN0392	PAD	
P4	XZB09X10C03	PROTECTION BAG (SCREW)	
P5	RPF0017	PROTECTION BAG (UNIT)	
P6	RPN0221	PAD (FRONT)	
P7	RPN0222-1	PAD (BACK)	
P8	RPH0065	TRAY COVER	
		ACCESSORIES	
A1	RAK-SV3002W	REMOTE CONTROL TRANSMITTER	
A1-1	RKK0008	BATERRY COVER	
A2	RQF0901A	INSTRUCTION MANUAL	
A3	SJPD19-1E	COAXIAL CABLE	
A4	SJAD8	AC POWER SUPPLY CORD	(EB) ⚠
A4	RJA0003-K	AC POWER SUPPLY CORD	(EG) ⚠
A5	RYQ0059-1	RACK MOUNT KIT	
A6	RYQ0060-1	RACK MOUNT KIT	
A7	XYN3+F10FZ	SCREW	
A8	RT-RCLP	CLEANING TAPE	
A9	UM-4NEP-2S	BATTERY	

Ref. No.	Part No.	Part Name & Description	Remarks
		PRINTED CIRCUIT	
		BOARDS ASS'Y	
PCB1	REP0814B	MAIN P. C. B. ASS'Y	(NLA)
PCB1-1	RFKBV3700EBA	PARALLEL REMOTE P. C. B.	(NLA)
		DIGITAL TERMINAL P. C. B.	(NLA)
		AC IN P. C. B.	(NLA)
		POWER SWITCH P. C. B.	(NLA)
		POWER TRANSFORMER P. C. B.	(NLA)
		ANALOG TERMINAL P. C. B.	(NLA)
		BALANCE/REC LEVEL P. C. B.	(NLA)
		OUTPUT LEVEL P. C. B.	(NLA)
		VOLTAGE SELECTOR P. C. B.	(NLA)
PCB1-2	RFKBV3700EBI	MAIN P. C. B.	(NLA)
PCB2	REP0693A	REGULATOR IC P. C. B.	(NLA)
		POWER SUPPLY P. C. B.	(NLA)
PCB3	REP0694A	OPERATION P. C. B.	(NLA)
		SEARCH P. C. B.	(NLA)
		HEADPHONES JACK P. C. B.	(NLA)
PCB4	REP0417A	RF P. C. B., SERVO P. C. B. ASS'Y	(NLA)
PCB4-1	RFKBV3700-N	RF P. C. B.	(NLA)
PCB4-2	RFKBV3700-0	SERVO P. C. B.	(NLA)
PCB5	REP0421A	TRAY MOTOR P. C. B.	(NLA)
		SWITCH P. C. B.	(NLA)
PCB6	REQ0012	CONNECTOR P. C. B.	(NLA)
		MECHANISM ASS'Y	
MECH1	RAA1001	MECHANISM UNIT	(NLA)

Note: Printed circuit board assembly and mechanism assembly with mark (NLA) is no longer available after discontinuation of the product.

■ PACKING

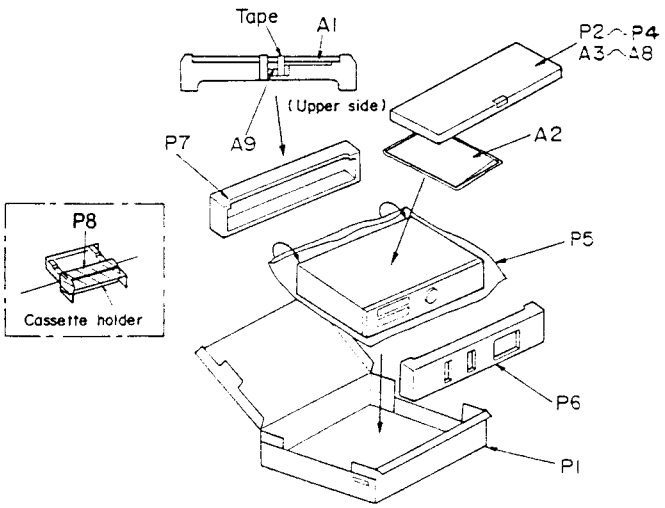

Ref. No.	Part No.	Values & Remarks
C227	ECUV1E333MDN	25V 0.033U
C228	ECUV1H181KCN	50V 180P
C229	ECEA0JK221B	6.3V 220U
C230	ECEA0JK470	6.3V 47U
C231	ECEA1AU470	10V 47U
C232	ECEA1CK220	16V 22U
C233	ECUV1E104ZFN	25V 0.1U
C234	ECEA1CK470	16V 47U
C235, 236	ECUV1E104ZFN	25V 0.1U
C237	ECUV1C105ZFM	16V 1U
C238	ECUV1E223MBN	25V 0.022U
C239	ECUV1E683MBN	25V 0.068U
C240	ECUV1E153MBN	25V 0.015U
C241	ECUV1E104MBN	25V 0.1U
C242-246	ECUV1E104ZFN	25V 0.1U
C247, 248	ECUV1E333MDN	25V 0.033U
C249	ECUV1E153MBN	25V 0.015U
C250	ECUV1E104MBN	25V 0.1U
C251-253	ECUV1E104ZFN	25V 0.1U
C260	ECUV1E334ZFM	25V 0.33U
C268	ECUV1C105ZFM	16V 1U
C269	ECUV1E103KBN	25V 0.01U
C270	ECEA0JK470	6.3V 47U
C271	ECUV1E104ZFN	25V 0.1U
C272	ECUV1E223MBN	25V 0.022U
C273	ECUV1H101KCN	50V 100P
C274	ECUV1E103KBN	25V 0.01U
C275	ECUV1C105ZFM	16V 1U
C276	ECUV1H221KCN	50V 220P
C280	ECUV1C334ZFN	16V 0.33U
C301-307	ECUV1H103ZFN	50V 0.01U
C341	ECUV1E104ZFN	25V 0.1U
C342	ECUV1H103ZFN	50V 0.01U
C350	ECUV1H103ZFN	50V 0.01U
C351	ECUV1E473MBN	25V 0.047U
C352	ECUV1H820JCN	50V 82P
C353	ECUV1H471JCN	50V 470P
C354, 355	ECUV1H221JCN	50V 220P
C356	ECUV1H151JCN	50V 150P
C357	ECEA0JU330	6.3V 33U
C358-361	ECUV1H180JCN	50V 18P
C362, 363	ECUV1H150JCN	50V 15P
C364	ECUV1H050CCN	50V 5P
C365	ECUV1H102KBN	50V 1000P
C366	ECUV1H103ZFN	50V 0.01U
C367, 368	ECEA0JU330	6.3V 33U
C369	ECEA0JU221	6.3V 220U
C370	ECUV1H150JCN	50V 15P
C371	ECUV1E104ZFN	25V 0.1U
C372	ECEA0JU330	6.3V 33U
C373	ECUV1H103ZFN	50V 0.01U
C374	ECEA0JU330	6.3V 33U

Ref. No.	Part No.	Values & Remarks
C376	ECUV1E103KBN	25V 0.01U
C377, 378	ECUV1E223MBN	25V 0.022U
C379	ECUV1E104ZFN	25V 0.1U
C385	ECUV1H103ZFN	50V 0.01U
C389	ECUV1E104ZFN	25V 0.1U
C390	ECUV1H103ZFN	50V 0.01U
C391	ECUV1E103KBN	25V 0.01U
C392-395	ECUV1H103ZFN	50V 0.01U
C396	ECUV1H390JCN	50V 39P
C397	ECUV1H103ZFN	50V 0.01U
C401	ECUV1E104ZFN	25V 0.1U
C404, 405	ECUV1H220JCN	50V 22P
C407, 408	ECUV1H103ZFN	50V 0.01U
C411, 412	ECEA1CPZ470B	16V 47U
C425-430	ECUV1E104ZFN	25V 0.1U
C431, 432	ECEA0JPZ221B	6.3V 220U
C433, 434	ECQB1H103JZ	50V 0.01U
C435	ECUV1E104ZFN	25V 0.1U
C438	ECEA0JU101B	6.3V 100U
C439, 440	ECEA1CU220	16V 22U
C500	ECUV1H102KBN	50V 1000P
C501, 502	ECHR1H271JZ3	50V 270P
C503, 504	ECUV1H103ZFN	50V 0.01U
C505, 506	ECHR1H103JZ3	50V 0.01U
C507, 508	ECEA1CU101	16V 100U
C509, 510	ECEA1CPZ101B	16V 100U
C511-514	ECEA0JPZ221B	6.3V 220U
C515-518	ECUV1H220JCN	50V 22P
C519, 520	ECEA1CU101	16V 100U
C521	ECUV1E104ZFN	25V 0.1U
C523, 524	ECUV1H103ZFN	50V 0.01U
C525	ECEA0JU101B	6.3V 100U
C526	ECUV1H103ZFN	50V 0.01U
C545, 546	ECUV1H220JCN	50V 22P
C547, 548	ECUV1H103ZFN	50V 0.01U
C549	ECUV1H470KCN	50V 47P
C550A	ECQV1H104JZ3	50V 0.1U
C550	ECUV1H470KCN	50V 47P
C551, 552	ECQV1H104JZ3	50V 0.1U
C553, 554	ECKT1H101KB	50V 100P
C555, 556	ECQV1H104JZ3	50V 0.1U
C561, 562	ECEA1CU220	16V 22U
C563, 564	ECEA1CN100SB	16V 10U
C602, 603	ECEA0JK470	6.3V 47U
C604, 605	ECBT1E103ZF	25V 0.01U
C652	ECBT1H102KB5	50V 1000P
C654	ECBT1H102KB5	50V 1000P
C655	ECEA1VK100B	35V 10U
C656	ECBT1H102KB5	50V 1000P
C657	ECEA0JK470	6.3V 47U
C658	ECBT1E103ZF	25V 0.01U
C659	ECEA1VK100B	35V 10U

Ref. No.	Part No.	Values & Remarks
C660	ECBT1E103ZF	25V 0.01U
C694	ECBT1E103ZF	25V 0.01U
C751	ECKW1H103ZF5	50V 0.01U
C901-904	ECEA1CPZ470B	16V 47U
C905-912	ECUV1H220JCN	50V 22P
C913, 914	ECEA1CPZ470B	16V 47U
C915, 916	ECEA1CPZ101B	16V 100U
C917, 918	ECUV1H103ZFN	50V 0.01U
C919, 920	ECUV1H220JCN	50V 22P
C921-924	ECUV1H150JCN	50V 15P
C925-928	ECEA1CPZ221B	16V 220U
C929, 930	ECUV1H103ZFN	50V 0.01U
C931	ECEA0JU330	6.3V 33U
C932, 933	ECUV1E224ZFN	25V 0.22U
C934-937	ECUV1H470KCN	50V 47P
C938, 939	ECUV1E224ZFN	25V 0.22U
C941, 942	ECUV1H103ZFN	50V 0.01U
C943	ECUV1H470KCN	50V 47P
C944	ECUV1H103ZFN	50V 0.01U
C945	ECKW1H103ZF5	50V 0.01U
C946	ECUV1H470KCN	50V 47P
C950	ECUV1H103ZFN	50V 0.01U
C951, 952	ECKW1H103ZF5	50V 0.01U
C953-960	ECHR1H221JZ3	50V 220P
C966	ECUV1H103ZFN	50V 0.01U
C990	ECUV1H103ZFN	50V 0.01U
C991, 992	ECEA1CU331	16V 330U
C995, 996	ECUV1H103ZFN	50V 0.01U
C1001-1009	ECUV1H103ZFN	50V 0.01U

Printed in Japan
H901101500 HH/TN

Ref. No.	Part No.	Values & Remarks
R525, 526	ERDAS3J472T	1/4W 4.7K
R527, 528	ERDAS3J332T	1/4W 3.3K
R529, 530	ERDAS3J152T	1/4W 1.5K
R531-534	ERDAS3J332T	1/4W 3.3K
R535, 536	ERDAS3J152T	1/4W 1.5K
R537, 538	ERJ6GEYJ105	1/10W 1M
R569-572	ERJ6GEYJ124V	1/10W 120K
R575, 576	ERDS2TJ102	1/4W 1K
R577	ERDAS3J332T	1/4W 3.3K
R577A	ERDS2TJ103	1/4W 10K
R578	ERDAS3J332T	1/4W 3.3K
R578A	ERDS2TJ103	1/4W 10K
R579	ERDAS3J332T	1/4W 3.3K
R579A	ERDS2TJ123	1/4W 12K
R580	ERDAS3J332T	1/4W 3.3K
R580A	ERDS2TJ123	1/4W 12K
R581A	ERDS2TJ104	1/4W 100K
R581	ERJ6GEYJ472V	1/10W 4.7K
R582A	ERDS2TJ104	1/4W 100K
R582	ERJ6GEYJ472V	1/10W 4.7K
R583A	ERDAS3G100T	1/4W 10
R583	ERJ6GEYJ472V	1/10W 4.7K
R584A	ERDAS3G100T	1/4W 10
R584	ERJ6GEYJ472V	1/10W 4.7K
R585A	ERDAS3G330T	1/4W 33
R585	ERJ6GEYJ472V	1/10W 4.7K
R586A	ERDAS3G330T	1/4W 33
R586	ERJ6GEYJ472V	1/10W 4.7K
R587A	ERDAS3G332T	1/4W 3.3K
R587	ERJ6GEYJ472V	1/10W 4.7K
R588A	ERDAS3G332T	1/4W 3.3K
R588	ERJ6GEYJ472V	1/10W 4.7K
R589, 590	ERDAS3G102T	1/4W 1K
R591, 592	ERDS2EJ121	1/4W 120
R593-596	ERDS2TJ222	1/4W 2.2K
R601-604	ERDS2TJ472	1/4W 4.7K
R605	ERDS2TJ100	1/4W 10
R606-608	ERDS2TJ102	1/4W 1K
R610, 611	ERDS2TJ471	1/4W 470
R612	ERDS2TJ102	1/4W 1K
R613-619	ERDS2TJ103	1/4W 10K
R620	ERDS2TJ471	1/4W 470
R621	ERDS2TJ105T	1/4W 1M
R901-904	ERDAS3J392T	1/4W 3.9K
R905-908	ERDAS3J102T	1/4W 1K
R909-912	ERDAS3J392T	1/4W 3.9K
R913-920	ERDAS3J332T	1/4W 3.3K
R921, 922	ERDAS3J102T	1/4W 1K
R923, 924	ERD25FJ331	1/4W 330 ⚠
R925, 926	ERJ6GEYJ105	1/10W 1M
R927, 928	ERDAS3J332T	1/4W 3.3K
R929, 930	ERDAS3J562T	1/4W 5.6K

Ref. No.	Part No.	Values & Remarks
R931-938	ERDS2TKF1002	1/4W 10K
R939, 940	ERDS2TKF3903	1/4W 390K
R941-944	ERDS2TKF2002	1/4W 20K
R945, 946	ERDAS3J122T	1/4W 1.2K
R947, 948	ERDS2TKF5103	1/4W 510K
R949, 950	ERDS2TKF2202	1/4W 22K
R951-954	ERDS2TKF75R0	1/4W 75.0
R955, 956	ERDS2TKF5103	1/4W 510K
R957, 958	ERDS2TKF2202	1/4W 22K
R959-962	ERDAS3J103T	1/4W 10K
R963, 964	ERJ6GEYJ473V	1/10W 47K
R965	ERDS2TJ561	1/4W 560
R967, 968	ERDAS3J472T	1/4W 4.7K
R969-972	ERDS2TJ331	1/4W 330
R973, 974	ERJ6GEYJ153V	1/10W 15K
R975, 976	ERJ6GEYJ101V	1/10W 100
R977	ERD25FJ101	1/4W 100 ⚠
R978, 979	ERJ6GEYJ100	1/10W 10
R980	ERJ6GEYJ331V	1/10W 330
R981	ERJ6GEYJ334V	1/10W 330K
R982	ERJ6GEYJ473V	1/10W 47K
R983	ERJ6GEYJ332V	1/10W 3.3K
R984, 985	ERDS2TJ750	1/4W 75
R986	ERJ6GEYJ223V	1/10W 22K
R987-990	ERDAS3J392T	1/4W 3.9K
R991-994	ERDAS3J101T	1/4W 100
R995, 996	ERJ6GEYJ473V	1/10W 47K
R997	ERJ6GEYJ223V	1/10W 22K
R998	ERJ6GEYJ101V	1/10W 100
R999	ERJ6GEYJ223V	1/10W 22K
R1001-1008	ERJ6GEYJ103V	1/10W 10K
R1009	ERJ6GEYJ272V	1/10W 2.7K
R1010	ERJ6GEYJ271V	1/10W 270
R1011	ERJ6GEYJ394V	1/10W 390K
		CAPACITORS
C1	ECKWKC103PF2	400V 0.01U ⚠
C11-19	ECKR1H103ZF5	50V 0.01U
C20	ECEA1EPZ332E	25V 3300U
C21	ECEA1CU100	16V 10U
C22	ECEA1EPZ332E	25V 3300U
C23	ECEA1CU100	16V 10U
C24	ECES1EU682G	25V 6800U
C25	ECEA1CU100	16V 10U
C26	ECEA1CU472E	16V 4700U
C27	ECEA1CU100	16V 10U
C28	ECEA1HU221B	50V 220U
C29	ECEA1VU330	35V 33U
C30, 31	ECKR1H103ZF5	50V 0.01U
C32	ECEA1EU470	25V 47U
C34	ECKR1H103ZF5	50V 0.01U

Ref. No.	Part No.	Values & Remarks
C79	ECKR1H103ZF5	50V 0.01U
C101, 102	ECUV1H222KBN	50V 2200P
C103, 104	ECUV1H471KCN	50V 470P
C105	ECUV1H470JCN	50V 47P
C107	ECUV1H222KBN	50V 2200P
C110	ECEA0JK221B	6.3V 220U
C123	ECUV1C105ZFM	16V 1U
C124, 125	ECUV1H472KBN	50V 4700P
C126, 127	ECUV1H470JCN	50V 47P
C129, 130	ECEA0JKS220B	6.3V 22U
C131	ECUV1H222KBN	50V 2200P
C150	ECUV1H471KCN	50V 470P
C151	ECUV1H222KBN	50V 2200P
C152	ECUV1H102KBN	50V 1000P
C154	ECUV1H220JCN	50V 22P
C155, 156	ECUV1H102KBN	50V 1000P
C157	ECUV1C105ZFM	16V 1U
C159	ECUV1H220JCN	50V 22P
C161	ECUV1H562KBN	50V 5600P
C163	ECUV1H562KBN	50V 5600P
C166	ECUV1E153MBN	25V 0.015U
C167	ECUV1H102KBN	50V 1000P
C168	ECUV1H270JCN	50V 27P
C169	ECUV1H100JCN	50V 10P
C171, 172	ECUV1H680JCN	50V 68P
C173	ECUV1H471KCN	50V 470P
C174	ECUV1E104MBN	25V 0.1U
C175	ECUV1H472KBN	50V 4700P
C176	ECUV1E333MDN	25V 0.033U
C177, 178	ECUV1H101KCN	50V 100P
C179	ECUV1E104MBN	25V 0.1U
C181	ECUV1C105ZFM	16V 1U
C185, 186	ECUV1H331KCN	50V 330P
C187	ECUV1H470JCN	50V 47P
C188	ECUV1H331KCN	50V 330P
C190	ECUV1H180JCN	50V 18P
C201	ECEA0JK470	6.3V 47U
C202	ECUV1E104ZFN	25V 0.1U
C203, 204	ECUV1H180JCN	50V 18P
C205, 206	ECUV1E104ZFN	25V 0.1U
C207	ECUV1H271KCN	50V 270P
C208	ECUV1H221KCN	50V 220P
C209, 210	ECUV1E104MBN	25V 0.1U
C211	ECUV1H221KCN	50V 220P
C212, 213	ECEA1CK220	16V 22U
C214, 215	ECUV1H101KCN	50V 100P
C216, 217	ECUV1C105ZFM	16V 1U
C218, 219	ECUV1H390KCN	50V 39P
C220, 221	ECUV1H121KCN	50V 120P
C222, 223	ECUV1C105ZFM	16V 1U
C224	ECQV1H683JZ3	50V 0.068U
C225, 226	ECUV1H332MBN	50V 3300P

■ Distinguishing by Serial No. Suffix

A. Suffix of a set with Old type remote sensor used in it

Serial No.:

"F" ·····Old type remote sensor
Product manufactured in Nov., '94 or before

B. Suffix of a set with New type remote sensor used in it

Serial No.:

"G" ·····New type remote sensor
Product manufactured in Dec., '94 onward

■ SCHMATIC DIAGRAM (SV-3700 Service Manual on page 59.)

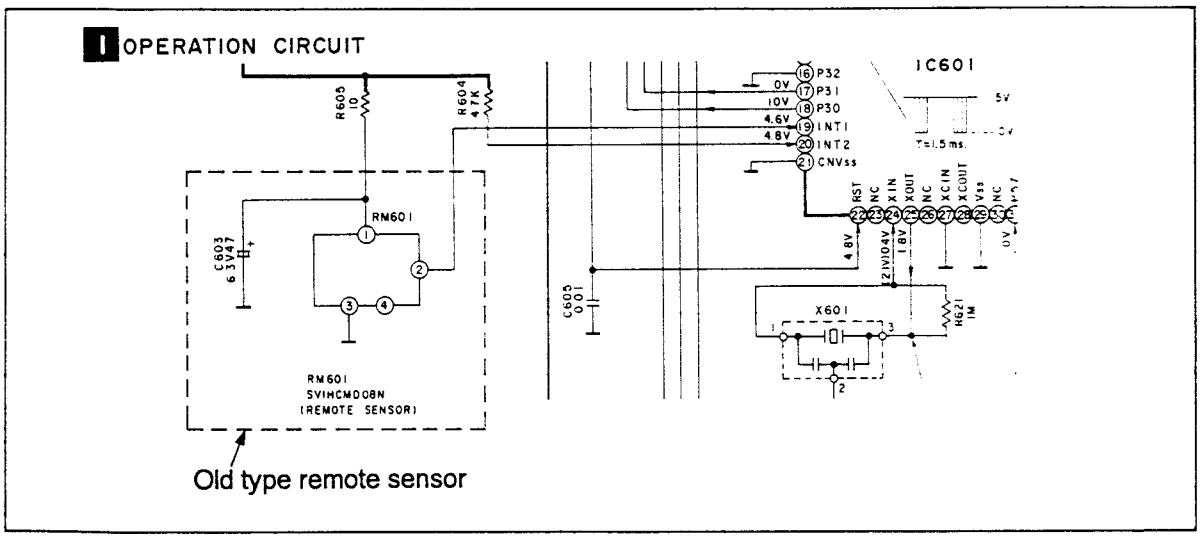

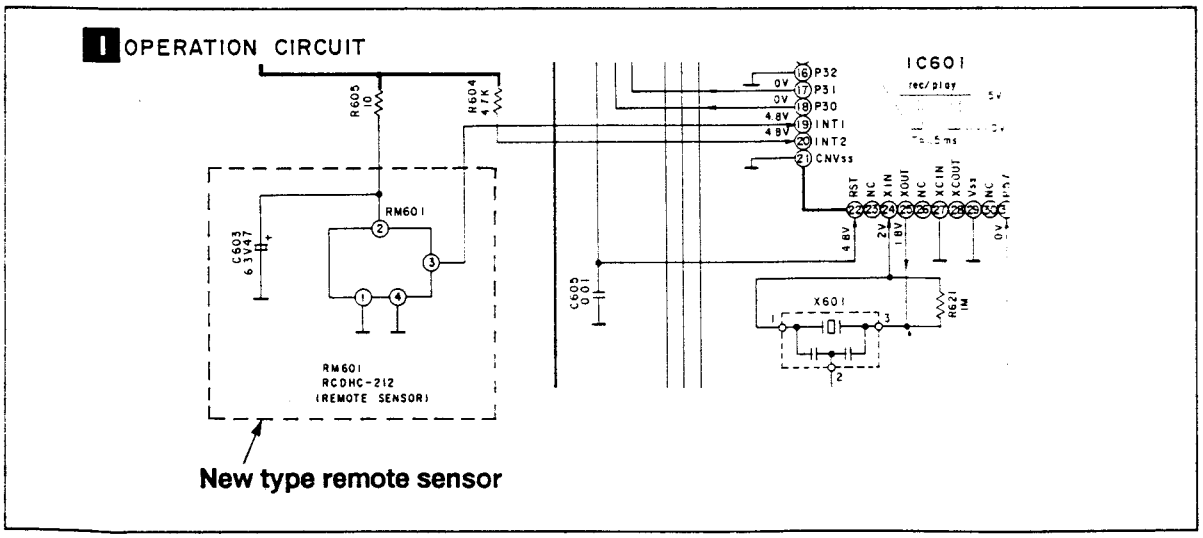

ORDER NO. AD9411340S2

5393

Service Manual

Supplement

Professional Digital Audio Tape Deck

SV-3700

Colour

(H)·····Gray Type

Area

Suffix for Model No.	Area	Colour
(EB)	Gerat Britain.	(H)
(EG)	Europe.	

Please file and use this supplement manual together with the service manual for Model No. SV-3700, Order No. AD9010314C2.

CHANGES

■ We inform you that the remote sensor used for the subject model has been changed since midway of production.

■ REPLACEMENT PARTS LIST (SV-3700 Service Manual on page 84.)

Ref. No.	Parts No.		Part Name & Description	Remarks
	OLD	**NEW**		
RM601	SVIHCMD08N	**RCDHC-212**	REMOTE SENSOR	

NOTE: When replacing the remote sensor of a set during service work, check if the type of the remote sensor is New or Old and use a replacement remote sensor of the same type.

■ How to distinguish between New type and Old type remote sensors.

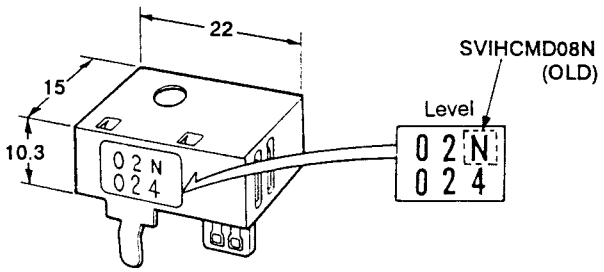

OLD Type

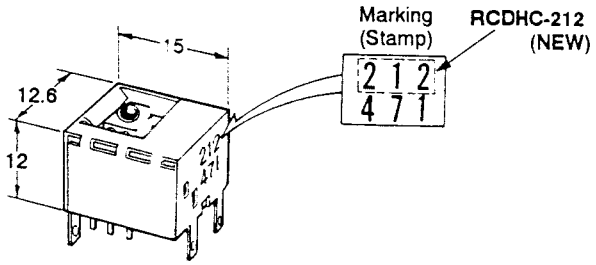

NEW Type

⚠ WARNING

This service information is designed for experienced repair technicians only and is not designed for use by the general public. It does not contain warnings or cautions to advise non-technical individuals of potential dangers in attempting to service a product. Products powered by electricity should be serviced or repaired only by experienced professional technicians. Any attempt to service or repair the product or products dealt with in this service information by anyone else could result in serious injury or death.

Panasonic®

■ PRINTED CIRCUIT BOARDS (SV-3700 Service Manual on page 72.)

There are 2 types of PC boards used for Model SV-3700, P.C.B 1 and P.C.B 2.

I OPERATION P.C.B. (REP1952A)

Remote sensors mounted to Type 1 PC boards are Old type remote sensors only.

P.C.B 1

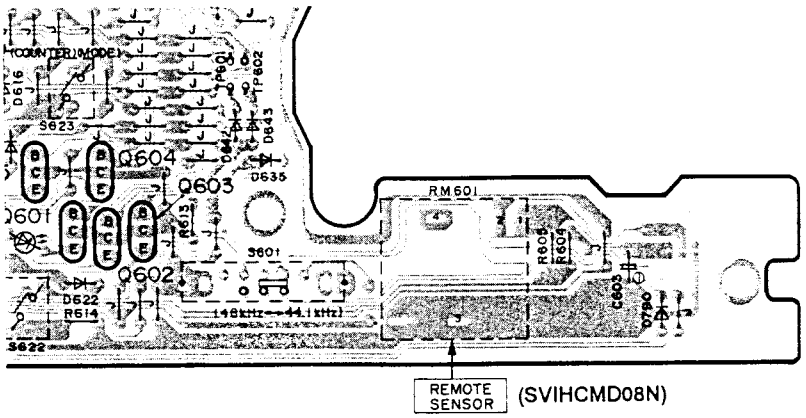

I OPERATION P.C.B. (REP1952A)

NO JUMPER WIRE IS USED ····· Old type remote sensor is used.

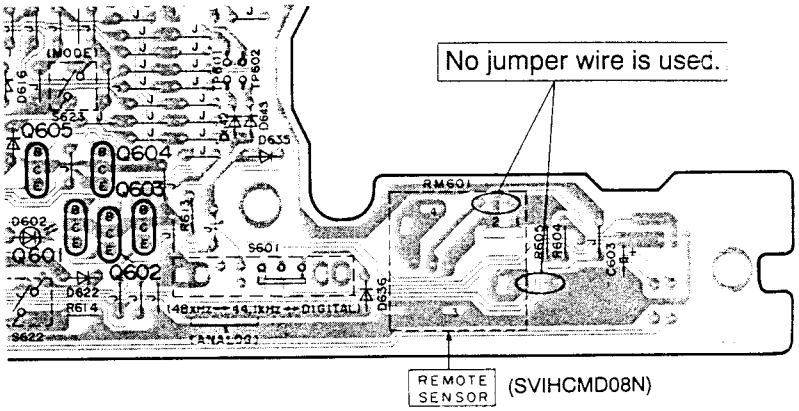

P.C.B 2

JUMPER WIRE IS USED ····· New type remote sensor is used.

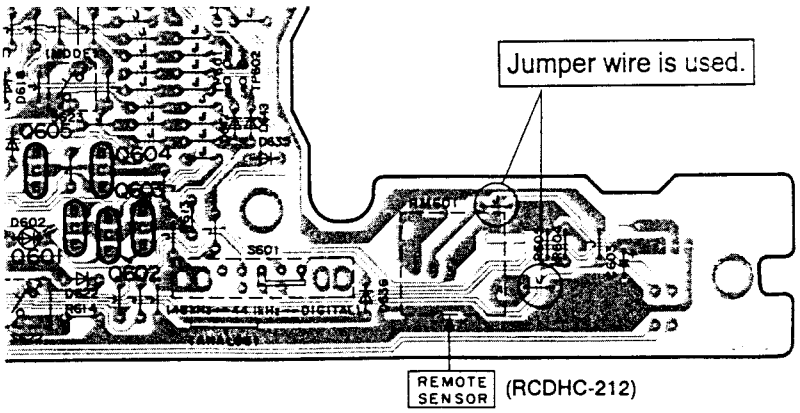

Printed in Japan
K94 1 08500YU