PIONEER
The Art of Entertainment

Service Manual

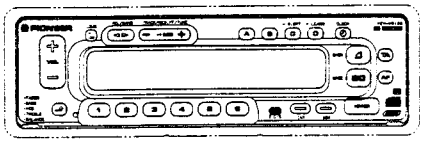

ORDER NO.
CRT1468

MULTI-CD CONTROL FM/MW/LW TUNER DECK AMPLIFIER

KEH-M9100ZRN EW

DETACHABLE GRILLE ASSEMBLY

CXA-M9101ZRN EW

- These models have been installed in RENAULT ESPACE.

Model	MATRA Part No.
KEH-M9100ZRN	60 2510 7407
CXA-M9101ZRN	60 2510 7410

- Dolby noise reduction manufactured under license from Dolby Laboratories Licensing Corporation. "Dolby" and the double-D symbol are trademarks of Dolby Laboratories Licensing Corporation.

- See the separate manual CX-175(CRT1276) for the cassette mechanism description.

CONTENTS

1. SPECIFICATIONS ····· 2
2. DISASSEMBLY ····· 2
3. CONNECTOR FUNCTION DESCRIPTION ····· 4
4. BLOCK DIAGRAM ····· 5
5. GENERAL GUIDE ····· 7
6. ADJUSTMENT ····· 8
7. CIRCUIT DIAGRAM AND P.C. BOARDS PATTERN ····· 26
8. CASSETTE MECHANISM ASSY EXPLODED VIEW ····· 47
9. EXPLODED VIEW (KEH-M9100ZRN) ····· 51
10. EXPLODED VIEW (CXA-M9101ZRN) ····· 51
11. ELECTRICAL PARTS LIST ····· 56

PIONEER ELECTRONIC CORPORATION 4-1, Meguro 1-Chome, Meguro-ku, Tokyo 153, Japan
PIONEER ELECTRONICS SERVICE INC. P.O. Box 1760, Long Beach, California 90801 U.S.A.
PIONEER ELECTRONICS OF CANADA, INC. 300 Allstate Parkway Markham, Ontario L3R 0P2 Canada
PIONEER ELECTRONIC [EUROPE] N.V. Haven 1087 Keetberglaan 1, 9120 Melsele, Belgium
PIONEER ELECTRONICS AUSTRALIA PTY. LTD. 178-184 Boundary Road, Braeside, Victoria 3195, Australia TEL: [03] 580-9911

© PIONEER ELECTRONIC CORPORATION 1992

FD MAY 1992 Printed in Japan

www.manualscenter.com

1. SPECIFICATIONS

General

Power source ..... 14.4 V DC (10.8 – 15.6 V allowable)
Grounding system ..... Negative type
Max. current consumption ..... 8.0 A
Dimensions (chassis) ..... 180 (W) x 50 (H) x 155 (D) mm
(front face) ..... 188 (W) x 58 (H) x 18 (D) mm
Weight ..... 1.7 kg

Amplifier

Maximum power output ..... 25 W x 4 (EIAJ)
Continuous power output ..... 13 W x 4 (1% dist. at 1 kHz)
Load impedance ..... 4 Ω (4 – 8 Ω allowable)
Tone controls (bass) ..... ±10 dB (100 Hz)
(middle) ..... ±10 dB (1 kHz)
(treble) ..... ±10 dB (10 kHz)
Loudness contour ..... +12 dB (100 Hz), +7 dB (10 kHz)
(Volume: –30 dB)
Nominal output level/
output impendance (pre out) ..... 500 mV/1 kΩ

Tape player

Tape ..... Compact cassette tape (C-30 – C-90)
Tape speed ..... 4.76 cm/sec. (+0.14 cm/sec., –0.05 cm/sec.)
Fast forward/rewind time ..... Approx. 100 sec. for C-60
Wow & flutter ..... 0.08 % (WRMS)
Frequency response ..... Metal: 30 – 22,000 Hz (±3 dB)
Stereo separation ..... 45 dB
Signal-to-noise ratio
..... Metal: Dolby C NR IN: 71 dB (IEC-A network)
Dolby B NR IN: 65 dB (IEC-A network)
Dolby NR OUT: 57 dB (IEC-A network)

FM tuner

Frequency range ..... 87.5 – 108 MHz
Usable sensitivity ..... 8 dBf (0.7 μV/75 Ω, mono)
50 dB quieting sensitivity ..... 13 dBf (1.2 μV/75 Ω, mono)
Signal-to-noise-ratio ..... 70 dB (IEC-A network)
Distortion ..... 0.3 % (at 65 dBf, 1 kHz, stereo)
Frequency response ..... 30 – 15,000 Hz (±3 dB)
Stereo separation ..... 40 dB (at 65 dBf, 1 kHz)

MW tuner

Frequency range ..... 531 – 1,602 kHz
Usable sensitivity ..... 18 μV (25 dB) (S/N: 20 dB)
Selectivity ..... 50 dB (±9 kHz)

LW tuner

Frequency range ..... 153 – 281 kHz
Usable sensitivity ..... 30 μV (30 dB) (S/N: 20 dB)
Selectivity ..... 50 dB (±9 kHz)

Note:

Specifications and the design are subject to possible modification without notice due to improvements.

2. DISASSEMBLY

• Removing the Case

1. Remove the screw.
2. Insert and turn a tweezers to remove the case.
3. Raise the case to remove.

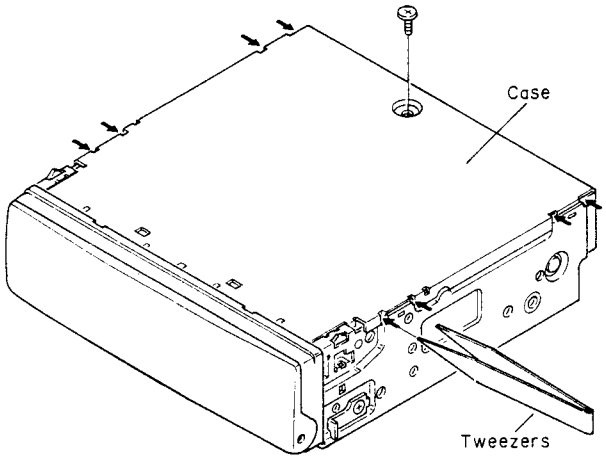

Fig. 1

• Removing the Cassette Mechanism Assy

1. Remove the four screws.
2. Disconnect the deck unit connector.
3. Remove the cassette mechanism assy.

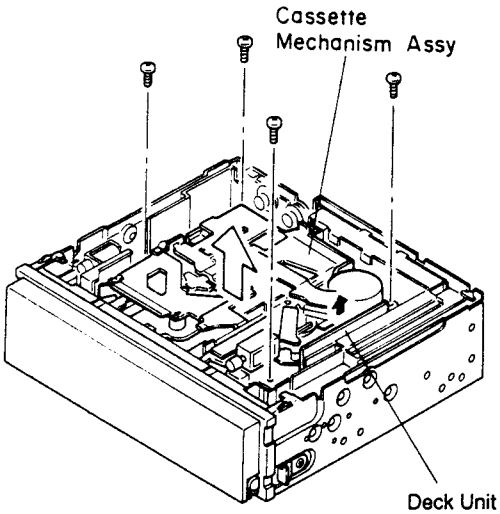

Fig. 2

• Removing the Grille Assy

1. Press the solenoid lever in the direction of the arrow to open the grille assy. (Fig. 3)
2. While holding down the lock button, pull the grille assy toward you. (Fig. 4)

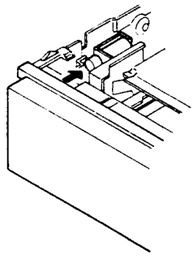

Fig. 3

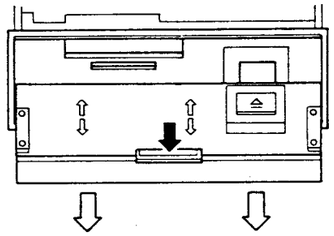

Fig. 4

• Removing the Grille Holder Assy

1. Remove the two screws.
2. Disconnect the three connectors.
3. Press the tabs at three locations indicated by arrows, and then pull out the grille holder Assy.

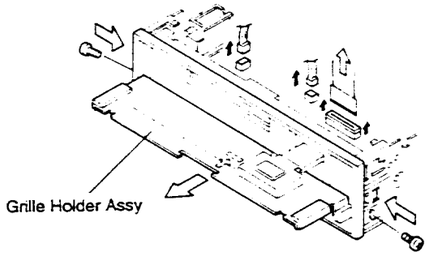

Fig. 5

• Removing the Display Unit

1. Remove the two screws A, and then remove the cover unit.
2. Press the tabs at three locations indicated by arrows, and then pull out the cover unit.
3. Remove the three screws B, and then remove the display unit.

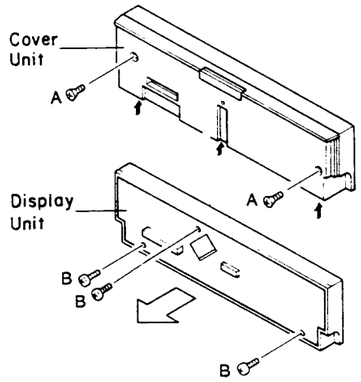

Fig. 6

• Removing the Audio Tuner Unit

1. Remove the four screws.
2. Unbend the tab at a location indicated by arrow until straight.
3. Raise up on audio tuner unit to remove it from chassis unit.

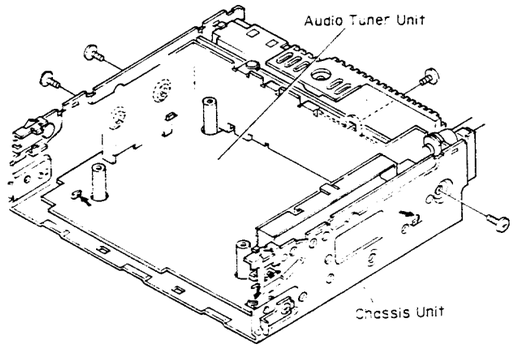

Fig. 7

3. CONNECTOR FUNCTION DESCRIPTION

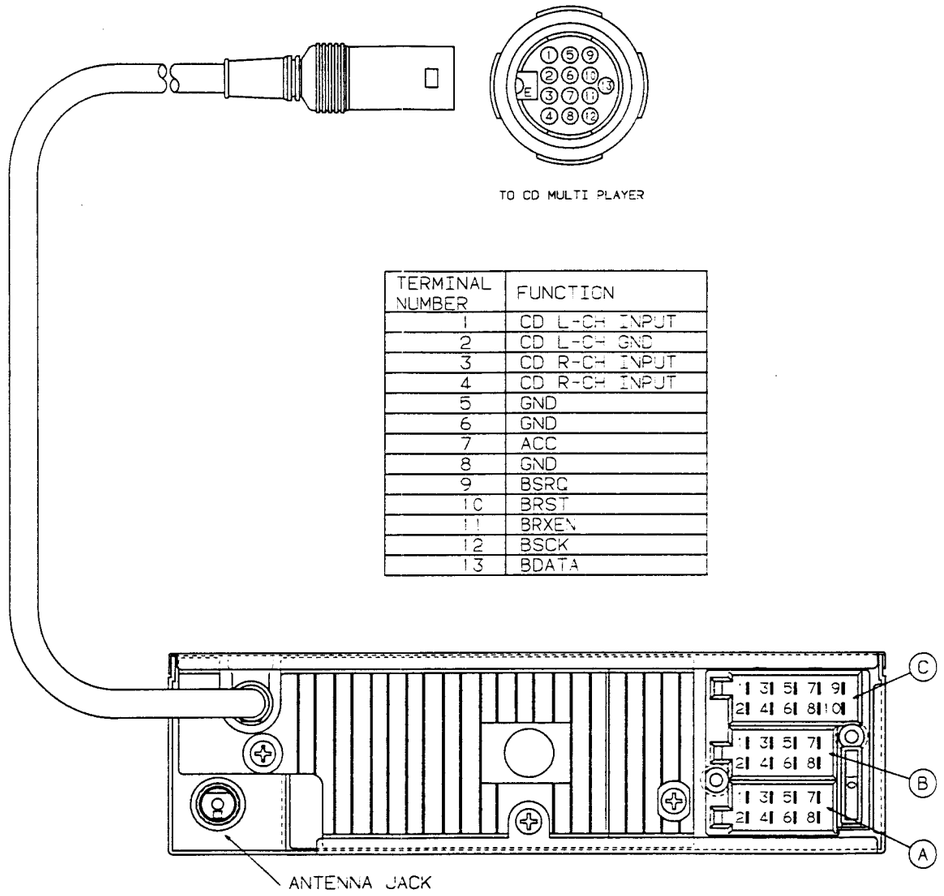

TERMINAL NUMBER	FUNCTION
1	CD L-CH INPUT
2	CD L-CH GND
3	CD R-CH INPUT
4	CD R-CH INPUT
5	GND
6	GND
7	ACC
8	GND
9	BSRQ
10	BRST
11	BRXEN
12	BSCK
13	BDATA

TERMINAL NUMBER	FUNCTION	TERMINAL NUMBER	FUNCTION	TERMINAL NUMBER	FUNCTION
A1	N.C	B1	R.R-	C1	N.C
A2	[illegible]	B2	R.R-	C2	N.C
A3	TEL.MUTE	B3	F.R-	C3	N.C
A4	BACK UP	B4	F.R-	C4	GND
A5	N.C	B5	F.L-	C5	KSTC
A6	N.C	B6	F.L-	C6	KD2
A7	ACC+	B7	R.L-	C7	KST1
A8	GND	B8	R.L-	C8	KD1
				C9	KST2
				C10	KD0

Fig. 8

www.manualscenter.com

4. BLOCK DIAGRAM

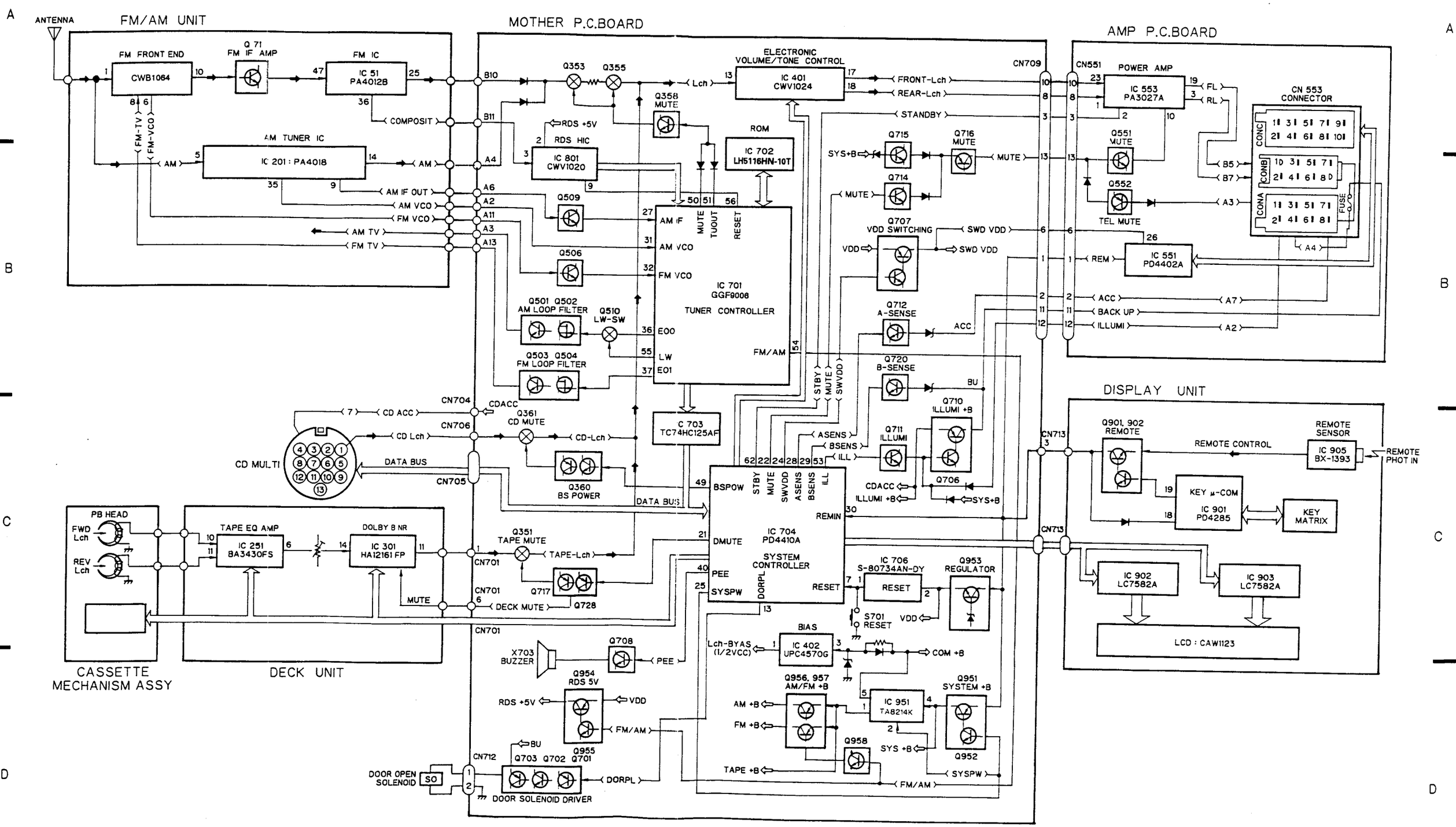

www.manualscenter.com

Fig. 9

5. GENERAL GUIDE

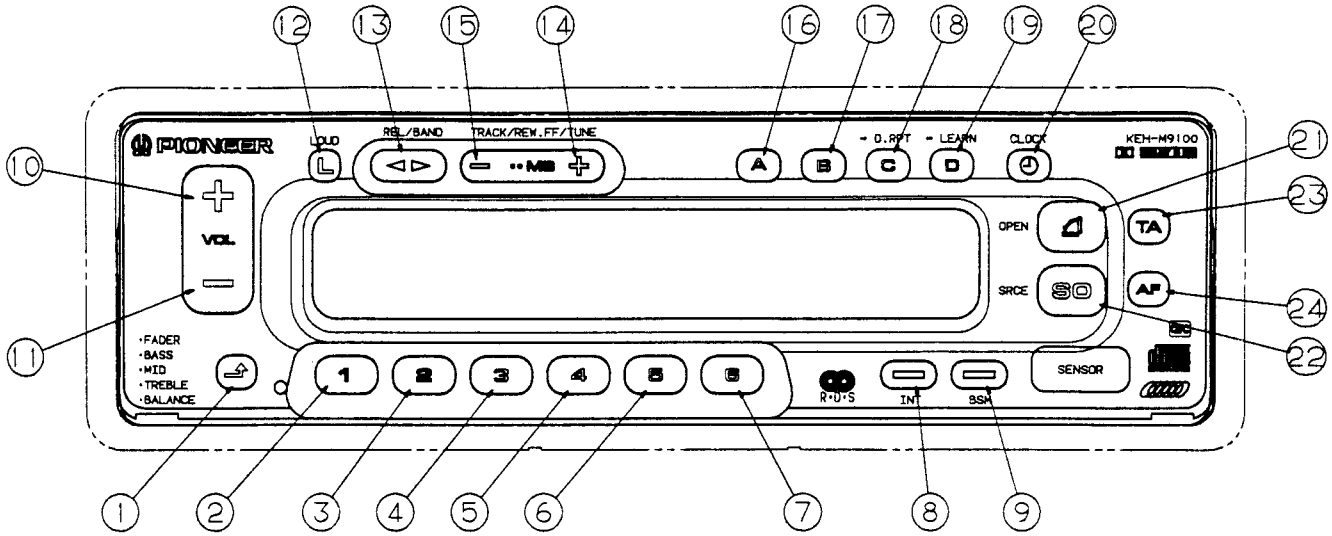

Fig. 10

24	LIST OF ALTERNATIVE FREQUENCIES	AFFICHAGE DES FREQUENCES DES EMETTEURS SUCCESSIFS
23	TRAFFIC ANNOUNCEMENT	ANNONCE ROUTIERE
22	SOURCE	SOURCE COULEUR ROUGE SUIVANT PIECE TYPE
21	OPEN	OUVERTURE
20	CLOCK	MONTRE
19	SEEK/B.SKIP/MANU	RECHERCHE/SAUT DE BLANC/MANUEL
18	MONO/REPEAT/RDM	MONO/REPETITION/LECTURE ALEATOIRE
17	LOC.S/NR/ITP	STATION LOCALE/NR/PROGRAMMATION DE PLAGE INSTANTEE
16	SCAN	BALAYAGE
15	TRACK-/REW/TUNE	REMBOBINAGE/DIMINUE LA FREQUENCE
14	TRACK+/FF/TUNE	DEFILEMENT RAPIDE/AUGMENTE LA FREQUENCE
13	REL/BAND	ANNULATION/GAMME
12	LOUD	CONTOUR
11	VOLUME DOWN	VOLUME -
10	VOLUME UP	VOLUME +
9	BSM	MEMOIRE DES MEILLEURES STATIONS
8	INT	INTERCEPTION RADIO ET CD
7	MEMORY	MEMOIRE 6
6	MEMORY	MEMOIRE 5
5	MEMORY	MEMOIRE 4
4	MEMORY	MEMOIRE 3
3	MEMORY	MEMOIRE 2
2	MEMORY	MEMOIRE 1
1	SHIFT	COMMUTATION DE FONCTION GRAVE/AIGUEYFADER
POSITION	FUNCTION	FONCTION

6. ADJUSTMENT

6.1 TUNER AUDIO SECTION

NOTICE:
Select C1 so that total capacity of 80pF is attained from the direction of the receiver jack.
Z: Output impedance of SSG.

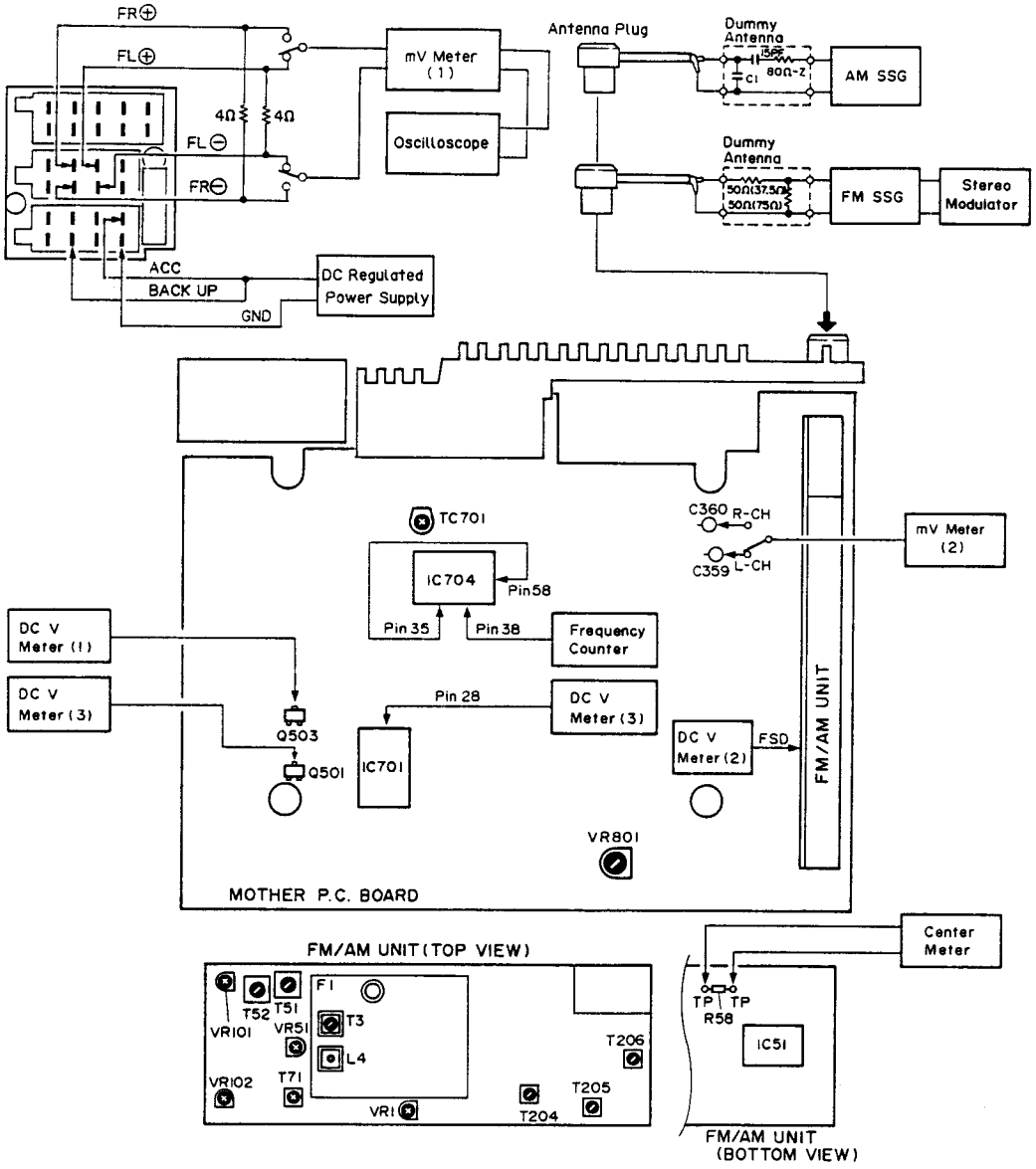

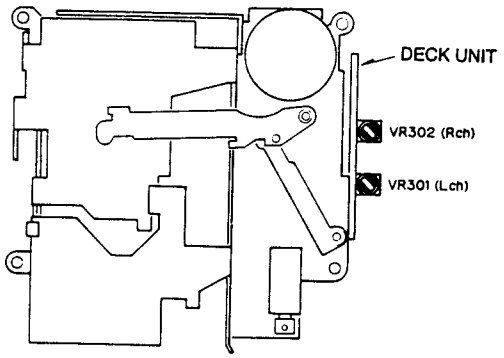

Fig. 11

www.manualscenter.com

FM ADJUSTMENT ※ Stereo MOD.: 1kHz, L+R=90% , Pilot=10%

	No.	FM SSG(400Hz, 100%)		Displayed Frequency (MHz)	Adjusting Point	Adjustment Method (Switch Position)
		Frequency(MHz)	Level(dBf)			
Front End	1			108.0	L4	DC V Meter(1):7.3±0.2V
	2			87.5	——	Verify that DC V Meter(1)is more than 1.4±0.6V.
	3	98.1025	10	98.1	T3	mV Meter(1):Maximum
IF	1	98.1	65	98.1	T51	Center Meter:0
	2	98.1	65	98.1	T52	Distortion Meter:Minimum
	3	Repeat No.1-2 alternately so that the center meter indicates the 0 output and distortion meter indicates the minimum output.				
	4	98.1	13	98.1	T71	Oscilloscope :Optimum Symmetry
	5	※98.1	65	98.1	T71	Distortion Meter:Minimum (Rotate T71 less than ±90°)
Soft Mute	1	98.1	65	98.1	—	mV Meter(1): A dB (FM STEREO MODE)
	2	98.1	14	98.1	VR102	mV Meter(1): A-3 dB (FM STEREO MODE)
ARC	1	※98.1	39	98.1	VR101	mV Meter(1):Separation 5 dB (FM STEREO MODE)
SD	1	98.1	20	98.1	VR51	DC V Meter(2):Approx. 5V
	2	98.1	19	98.1	—	Verify that DC V Meter (2)is approx. 0V
	3	98.1	60	98.1	VR1	DC V Meter(2):Approx. 5V
	4	98.1	59	98.1	—	Verify that DC V Meter (2)is approx. 0V
RDS	1	98.1	35	98.1	VR801	DC V Meter(3):1.2±0.05V

MW/LW ADJUSTMENT

	No.	AM SSG(400Hz, 30%)		Displayed Frequency (kHz)	Adjusting Point	Adjustment Method (Switch Position)
		Frequency(kHz)	Level(dBμV)			
Tuning Volt	1	—	—	153	—	Verify that DC V Meter (3) is more than 2.0V.
	2	—	—	1,602	—	Verify that DC V Meter (3) is less than 6.5V.
	3	999	25	999	T204, 205, 206	mV Meter(1):Maximum

CLOCK ADJUSTMENT

No.	Adjusting Point	Adjustment Method (Switch Position)
1		Pin 35(TEST) of IC704 connect to pin 58(VDD) of IC704
2	TC701	Frequency Counter : 1.048576MHz±2Hz

DOLBY NR ADJUSTMENT

No.	Cassette Tape	Adjusting Point	Adjustment Method (Switch Position)
1	NCT-150(400Hz, 200nwb/m)	VR301(Lch)VR302(Rch)	mV Meter(2):-7.2dBs (DOLBY NR Switch:OFF)

6.2 TEST MODE

Test mode is mainly used in adjustment of CD multi-players (CDX-M9100ZRN).

- Switching to test mode
  While pressing the AF, 6 keys together, switch the back-up ON or release the clear button.
- Canceling test mode
  Press the CD multi-player clear button, and then the KEH-M9100ZRN clear button. Or, switch the CD multi-player and KEH-M9100ZRN back-up OFF.
- Key functions during test mode
  The CD multi-player, deck and tuner are selected by the SO key.

NOTE:
When connecting the KEH-M9100ZRN and CDX-M9101ZRN use the data cable (CDE3780) supplied with this unit.
(Will not operate if a cord other than that supplied is used.)

a)CD multi-player

Key	Function
BAND/REL	Regulator ON/OFF
FWD	FWD kick
REV	REV kick
A	Tracking close
B	Tracking open
C	Focus close
D	Carriage/tracking switching

b)DECK, TUNER

No corresponding function, Normal operation executed.

www.manualscenter.com

● **Flow Chart**

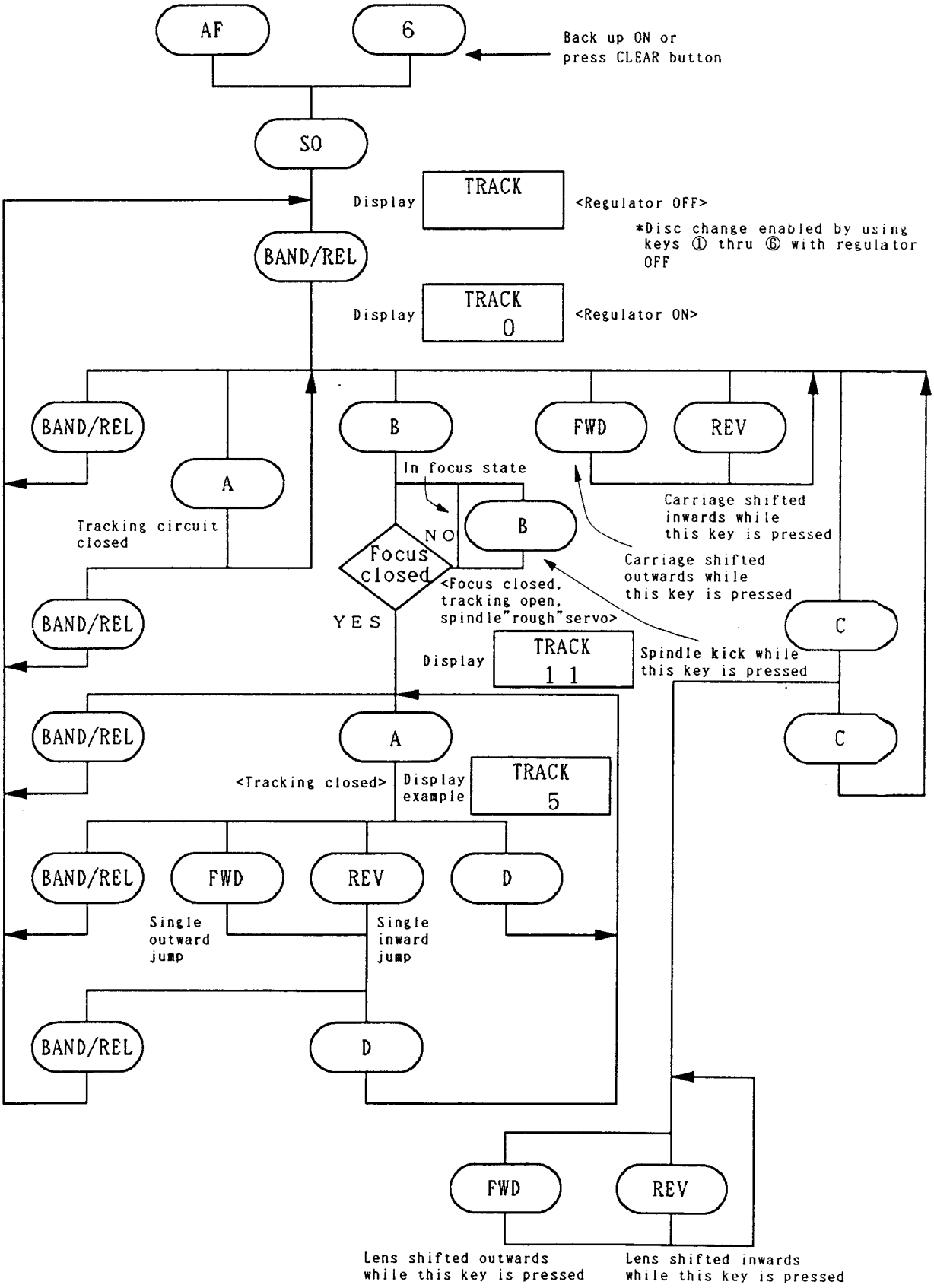
AF
6
Back up ON or
press CLEAR button
SO
Display
TRACK
<Regulator OFF>
*Disc change enabled by using keys ① thru ⑥ with regulator OFF
BAND/REL
Display
TRACK
0
<Regulator ON>
BAND/REL
B
FWD
REV
A
In focus state
Carriage shifted inwards while this key is pressed
Tracking circuit closed
NO
B
Focus closed
Carriage shifted outwards while this key is pressed
<Focus closed, tracking open, spindle"rough"servo>
BAND/REL
YES
C
Display
TRACK
1 1
Spindle kick while this key is pressed
BAND/REL
A
C
<Tracking closed>
Display example
TRACK
5
BAND/REL
FWD
REV
D
Single outward jump
Single inward jump
BAND/REL
D
FWD
REV
Lens shifted outwards while this key is pressed
Lens shifted inwards while this key is pressed

● ICs

CWV1020

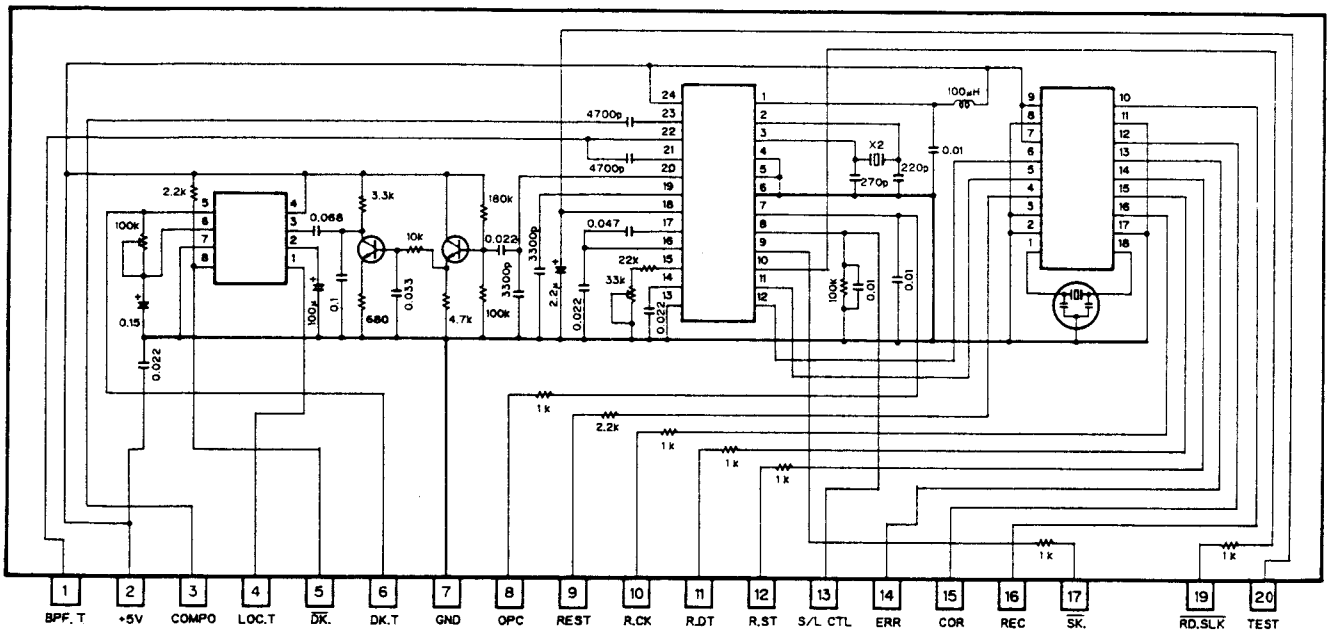

CWV1024

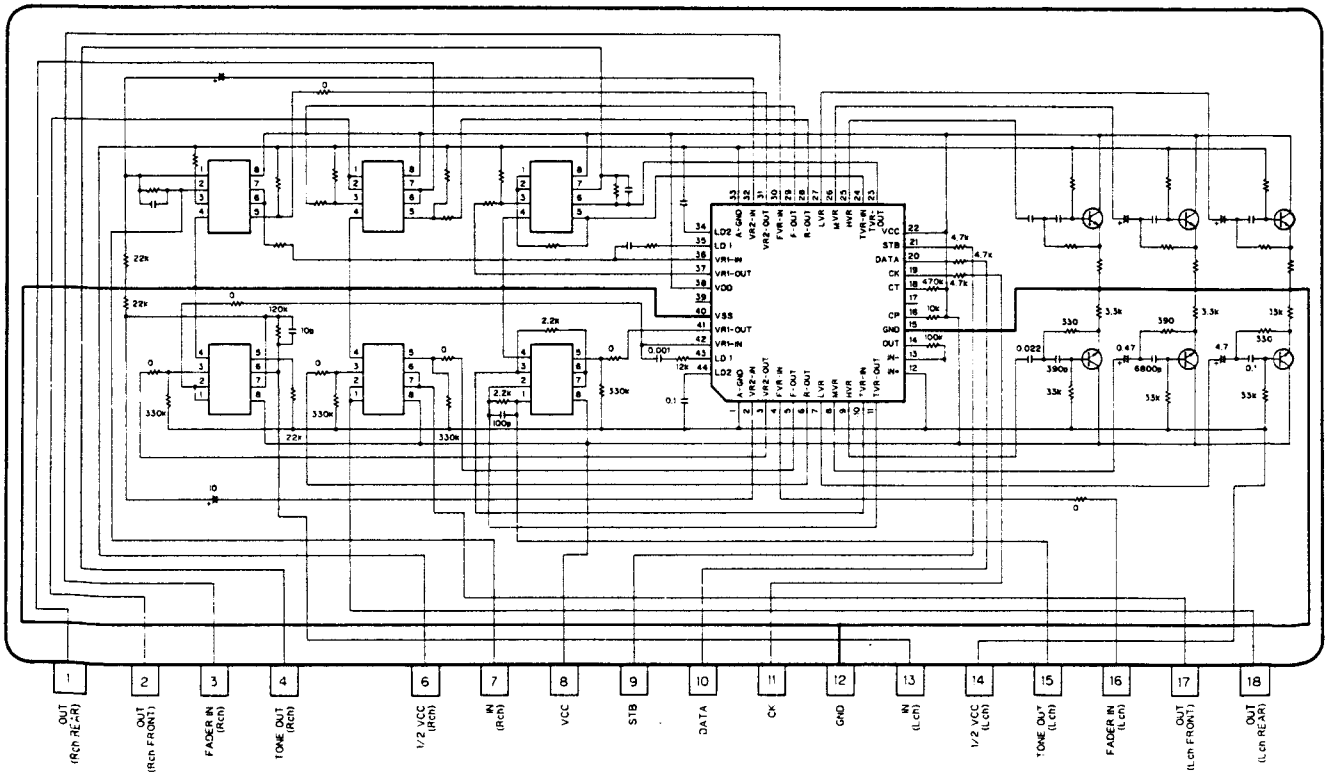

www.manualscenter.com

BA3430FS

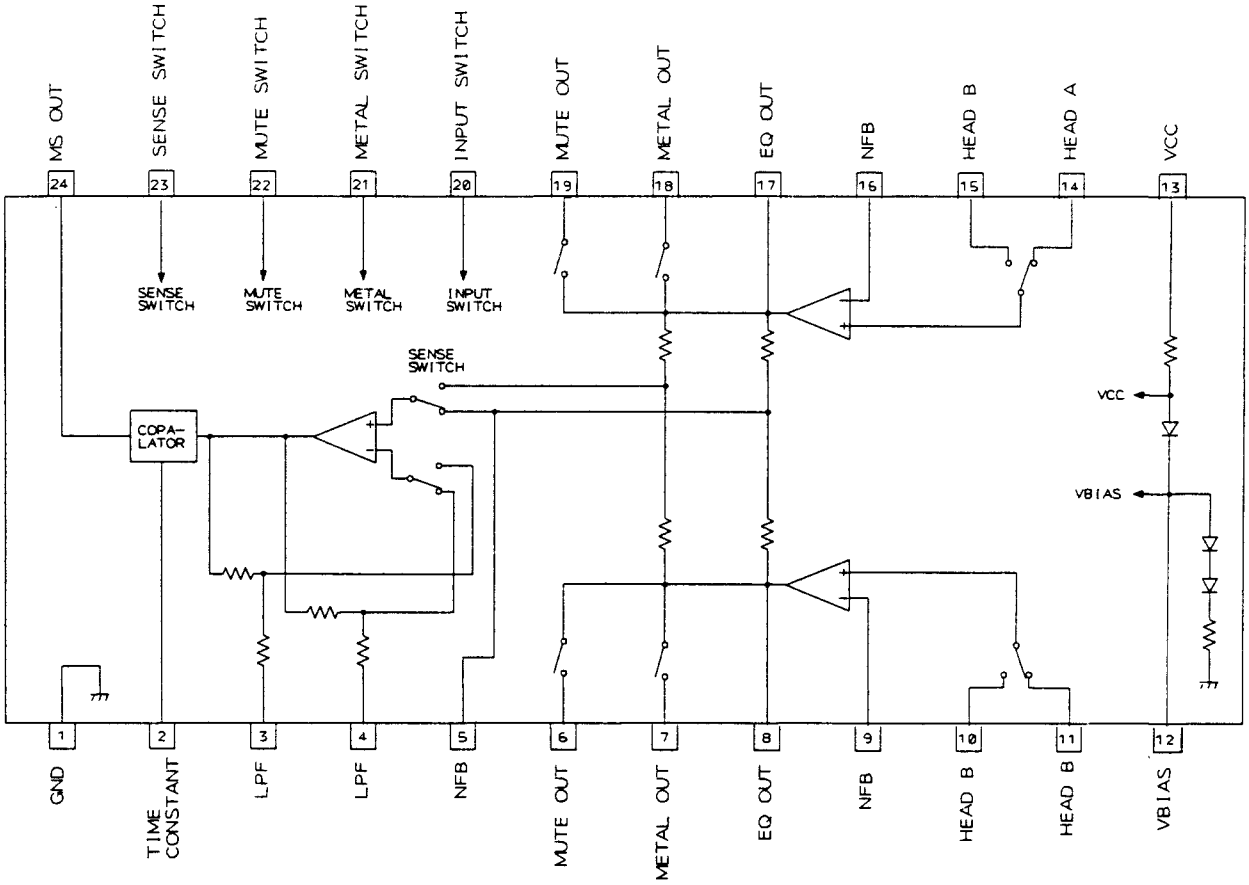

S-80740AH-B4
S-80734AN-DY

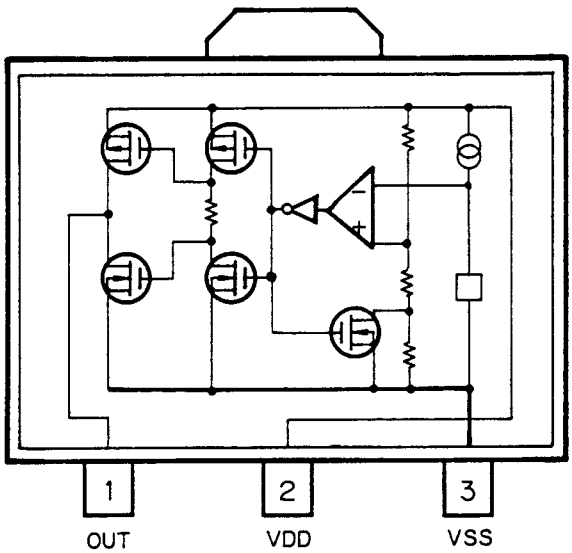

HA12134FP

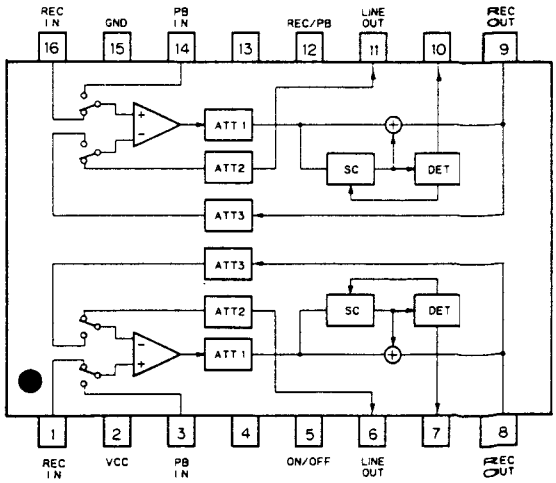

PD4285

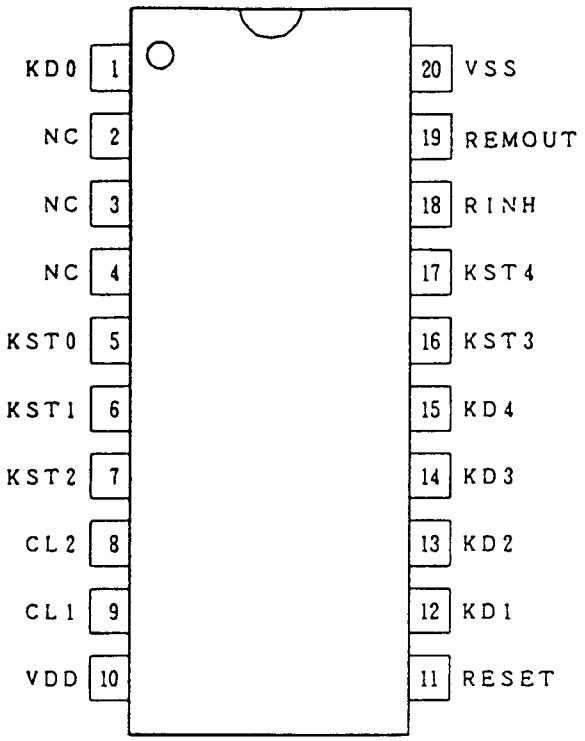

● **Pin Functions (PD4285)**

Pin No.	Pin Name	I/O	Output Format	Function and Operation
1	KDD	INPUT		Key return input
2 – 4	NC			
5 – 7	KST0 – KST2	OUTPUT	NM	Key strobe output
8	CL2			System clock generator connector pin
9	CL1			System clock generator connector pin
10	VDD			
11	RESET	INPUT		Reset input
12 – 15	KD1 – KD4	INPUT		Key return input
16, 17	KST3, KST4	OUTPUT	NM	Key strobe output
18	RINH	OUTPUT	NM	Remote controller OFF output when key data is outputed
19	REMOUT	OUTPUT	NM	Remote controller data output
20	VSS			GND

Output Format	Meaning
NM	Middle resistivity N channel open drain

www.manualscenter.com

PA4018

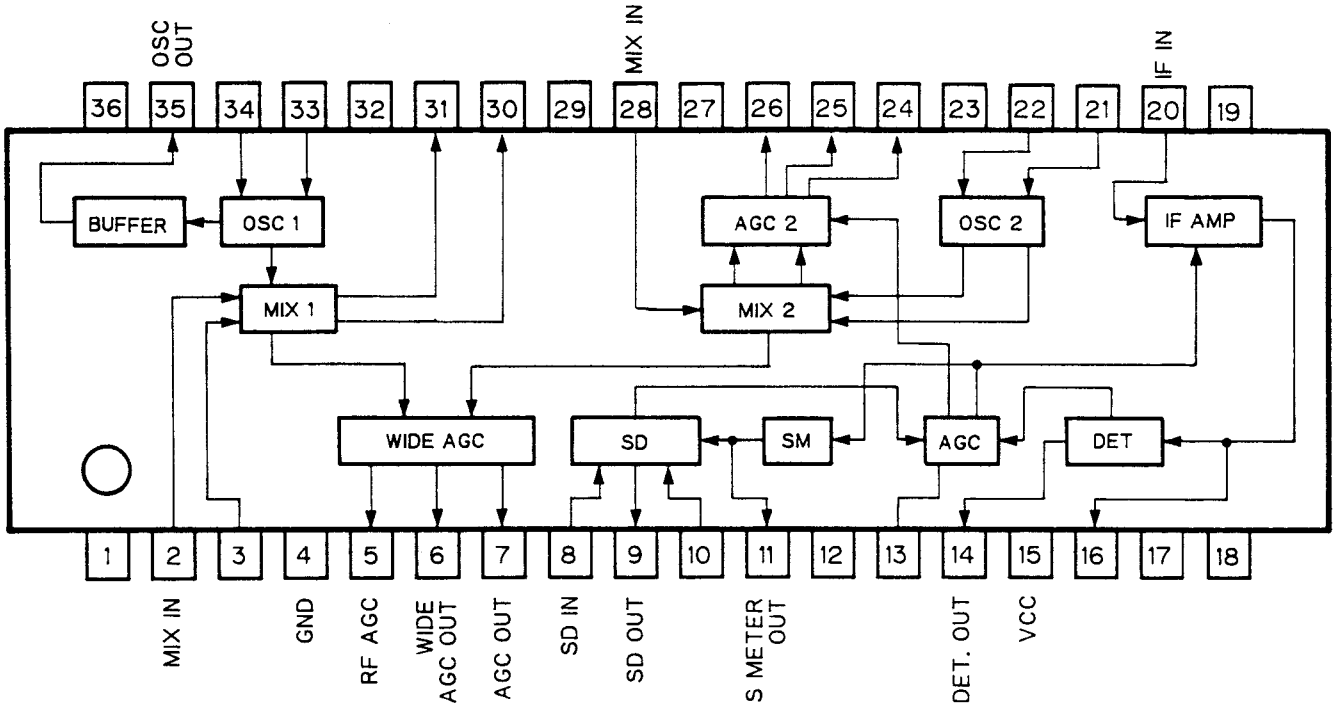

PA4012B

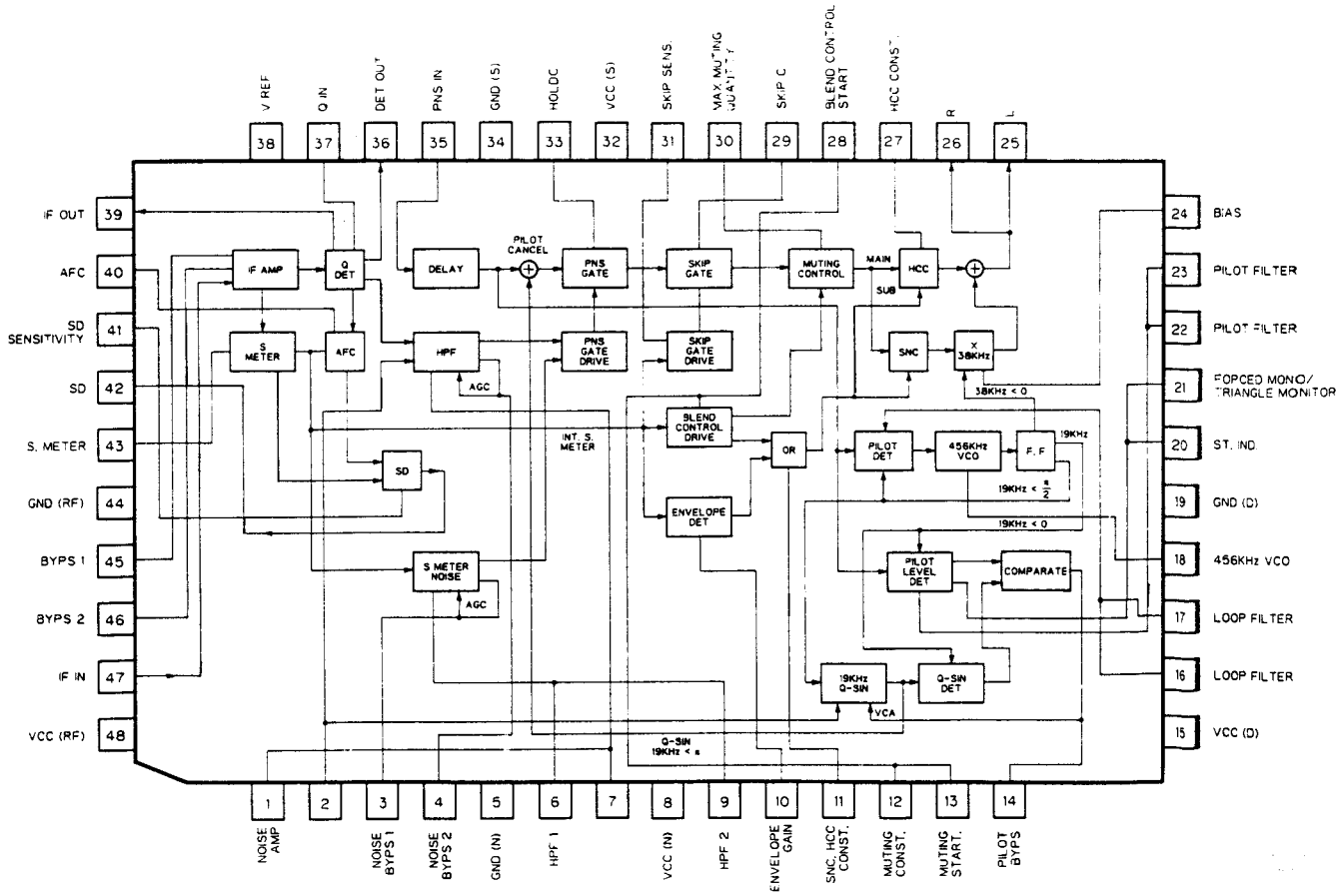

LH5116HN-10T

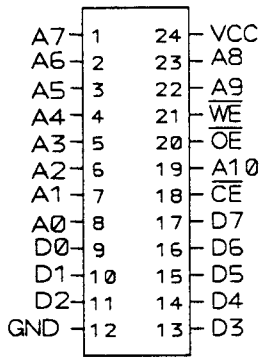

*GGF9006

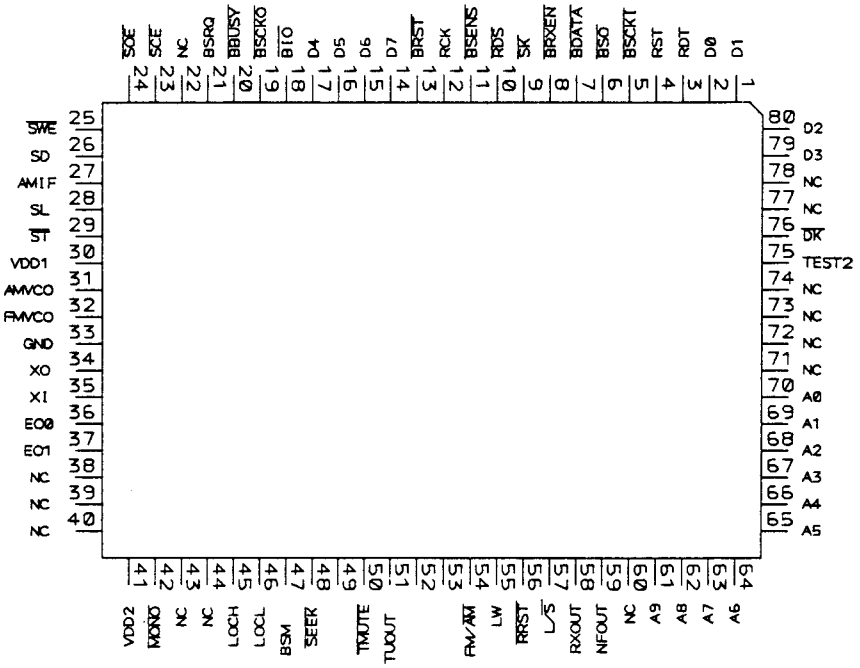

*IC's marked by * are MOS type.*
Be careful in handling them because they are very liable to be damaged by electrostatic induction.

● **Pin Functions (GGF9006)**

Pin No.	Pin Name	I/O	I/O Format	Function and Operation
1,2	D1,D0	I/O	C	SRAM data input/output pin
3	RDT	Input	N	RDS error correction data input pin
4	RST	Input	N	RDS data start input pin
5	$\overline{\text{BSCKI}}$	Input	C	Serial clock input pin
6	$\overline{\text{BSO}}$	Output	C	Serial data output pin
7	$\overline{\text{BDATA}}$	Input	C	Serial data input pin
8	$\overline{\text{BRXEN}}$	Input	C	Bus communication reception enable input pin
9	$\overline{\text{SK}}$	Input	C	SK signal input pin
10	$\overline{\text{RDS}}$	Input	C	RDS signal lock input pin
11	$\overline{\text{BSENS}}$	Input		Back up power sense input pin
12	RCK	Input		RDS data clock input pin
13	$\overline{\text{BRST}}$	Input	C	Bus communication reset input pin
14－17	D7－D4	I/O	C	SRAM data input/output pin
18	$\overline{\text{BIO}}$	Output	N	Bus transmission/reception control output pin "H":reception, "L":transmission
19	$\overline{\text{BSCKO}}$	Output	N	Serial clock output pin
20	$\overline{\text{BBUSY}}$	Output	N	Bus communication busy output pin

www.manualscenter.com

Pin No.	Pin Name	I/O	I/O Format	Function and Operation
21	BSRQ	Output	C	Bus communication service request output pin
22	NC			Not used
23	$\overline{SCE}$	Output	C	SRAM chip enable output pin
24	$\overline{SOE}$	Output	C	SRAM output enable output pin
25	$\overline{SWE}$	Output	C	SRAM read/write output pin "H":read,"L":write
26	SD	Input	C	SD signal input pin
27	AMIF	Input	C	AM IF input pin
28	SL	Input	C	Signal level input pin
29	$\overline{ST}$	Input	C	Stereo broadcast detection signal input pin
30	VDD1			Device power supply terminal
31	AMVCO	Input		AM VCO signal input pin
32	FMVCO	Input		FM VCO signal input pin
33	GND			GND
34	XO	Output		Crystal oscillating element connection pin
35	XI	Input		Crystal oscillating element connection pin
36	EOO	Output		PLL error output pin (Not used)
37	EO1	Output		PLL error output pin
38－40	NC			Not used
41	VDD2			Device power supply pin
42	$\overline{MONO}$	Output	C	Forced mono output pin
43,44	NC			Not used
45	LOCH	Output	C	Local H setup output pin
46	LOCL	Output	C	Local L setup output pin
47	BSM	Output	C	Outputs high signal during BSM local SEEK operation.
48	$\overline{SEEK}$	Output	C	SEEK output pin Outputs low signal during SEEK operation.
49	NC			
50	$\overline{TMUTE}$	Output	C	Tuner mute output pin
51	TUOUT	Output	C	Tuner/CD multi audio signal switching control pin "H":Tuner, "L":CD multi
52,53	NC			
54	FM/$\overline{AM}$	Output	C	FM/AM power select output pin "H":FM, "L":AM
55	LW	Output	C	Loop filter switching output pin "H":LW
56	$\overline{RRST}$	Output	C	RDS data reset output pin
57	L/$\overline{S}$	Output	C	RDS decoder time constant select output pin
58	RXOUT	Output	C	RX output pin
59	NFOUT	Output	C	NF output pin
60	NC			Not used
61－70	A9－A0	Output	C	SRAM address output pin
71－74	NC			Not used
75	TEST2	Input	RDW	TEST mode input pin
76	$\overline{DK}$	Input	RDW	DK signal input pin
77,78	NC			Not used
79,80	D3,D2	I/O	C	SRAM data input/output pin

I/O Format	Meaning
C	CMOS Output
N	N channel open drain
RDW	With pull down resistor

*PD4410A

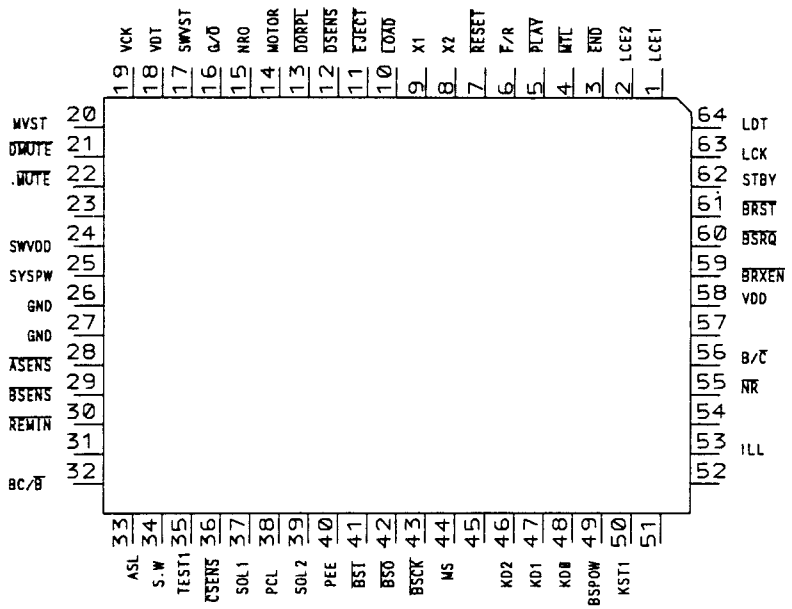

● **Pin Functions (PD4410A)**

Pin No.	Pin Name	I/O	I/O Format	Function and Operation
1	LCE1	Output	C	Chip enable or strobe output for LCD driver IC
2	LCE2	Output	C	Chip enable or strobe output for LCD driver IC
3	$\overline{\text{END}}$	Input		Deck END sensor input
4	$\overline{\text{MTL}}$	Input		Deck METAL(70μS)sensor input
5	$\overline{\text{PLAY}}$	Input		Deck head position(PLAY)sensor input
6	$\overline{\text{F}}$/R	Input		Deck FWD/REV sensor input
7	$\overline{\text{RESET}}$	Input		Reset input
8	X2			Crystal oscillating element connection pin
9	X1			Crystal oscillating element connection pin
10	$\overline{\text{LOAD}}$	Input		Deck LOAD/EJECT sensor input
11	$\overline{\text{EJECT}}$	Input		Eject signsl input
12	$\overline{\text{DSENS}}$	Input		Front panel EJECT/REPLACE sensor input
13	$\overline{\text{DORPL}}$	Output	C	Strobe for front panel open solenoid control
14	MOTOR	Output	C	Deck main motor control output
15	NRO	Output	C	Deck FWD/REV head selector output
16	$\overline{\text{G}}$/O	Output	C	Illumination green/amber selector output
17	SWVST	Output	C	Strobe output for sub woofer electronic volume
18	VDT	Output	C	Data output for electronic volume
19	VCK	Output	C	Clock output for electronic volume

www.manualscenter.com

Pin No.	Pin Name	I/O	I/O Format	Function and Operation
20	MVST	Output	C	Strobe output for electronic volume
21	$\overline{\text{DMUTE}}$	Output	C	Deck mute output
22	$\overline{\text{MUTE}}$	Output	C	System mute output
23	TAPPW	Output	C	Deck power supply control
24	SWVDD	Output	C	Power supply control output for IC901
25	SYSPW	Output	C	System(power amp)power supply control
26,27	GND			GND
28	$\overline{\text{ASENS}}$	Input		ACC power supply sensor input
29	$\overline{\text{BSENS}}$	Input		BACK UP power supply sensor input
30	REMIN	Input		Remote control pulse input
31	NC			
32	BC/$\overline{\text{B}}$	Input		Dolby NR BC/B select input
33	ASL	Input		ASL select input
34	SW	Input		Sub woofer select input
35	TEST	Input		Not used
36	$\overline{\text{CSENS}}$	Input		Front panel OPEN/CLOSE sensor input
37	SOL1	Output	C	Output for deck solenoid 1 (head position)
38	PCL	Output	C	Clock adjustment test point
39	SOL2	Output	C	Output for deck solenoid 2 (DIR selector and EJECT)
40	PEE	Output	C	Beep tone output
41	BSI	Input		Bus serial data input
42	BSO	Output	C	Bus serial data output
43	$\overline{\text{BSCK}}$	Input/ Output	C	Bus serial clock input/output
44	MS	Input		Music signal input
45	NC			
46～48	KD2～KD0	Input		Key return input
49	BSPOW	Output	C	Bus mute output
50	KST1	Output	N	Key strobe output for ASL
51	NC			
52	NC			
53	ILL	Output	N	Illumination ON/OFF output
54	NC			
55	$\overline{\text{NR}}$	Output	C	Dolby NR ON/OFF output
56	B/$\overline{\text{C}}$	Output	C	Dolby NR B/C selector output
57	NC			
58	VDD			
59	$\overline{\text{BRXEN}}$	Input/ Output	C	Bus reception enable line
60	$\overline{\text{BSRQ}}$	Input		Data communications serial poll request
61	$\overline{\text{BRST}}$	Output	C	Bus reset
62	STBY	Output	C	Power amp stand-by output pin
63	LCK	Output	C	Clock output for LCD drivers
64	LDT	Output	C	Data output for LCD drivers

Output Format	Meaning
C	CMOS Output
N	N channel open drain

UPC4570G

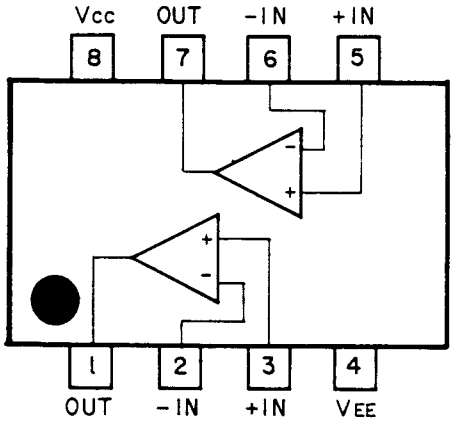

PD4402A

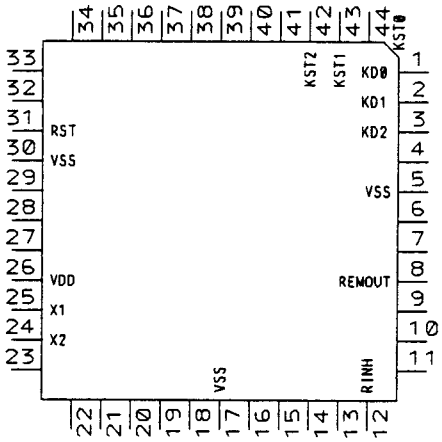

● **Pin Functions (PD4402A)**

Pin No.	Pin Name	I/O	I/O Format	Function and Operation
1～3	KD0～KD2	Input		Key return input
4	NC			
5, 17	VSS			Gnd
6, 7	NC			
8	REMOUT	Output	C	Key data output
9～11	NC			
12	RINH	Output	C	Inhibit output for key data
13～16	NC			
18～23	NC			
24	X2			Crystal oscillating element connection pin
25	X1			Crystal oscillating element connection pin
26	VDD			
27～29	NC			
30	VSS			Gnd
31	RESET	Input		Reset input
32～41	NC			
42～44	KST2～KST0	Output	N	Key strobe output

www.manualscenter.com

TA8214K

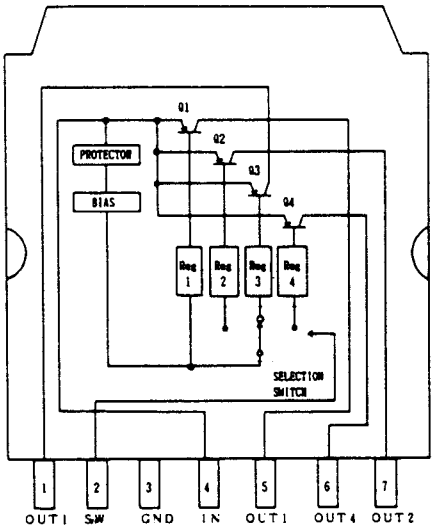

TC74HC125AF

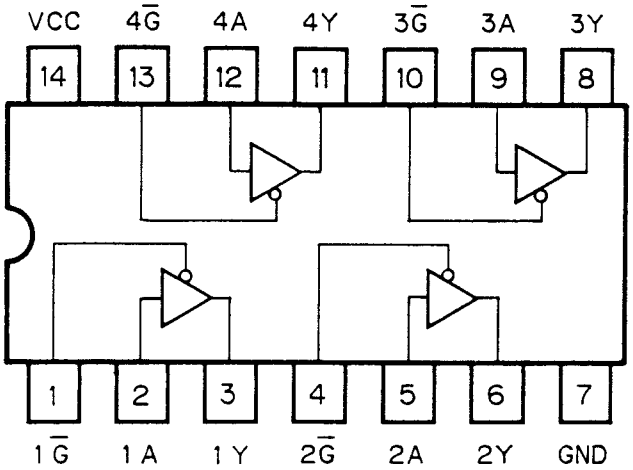

*LC7582A

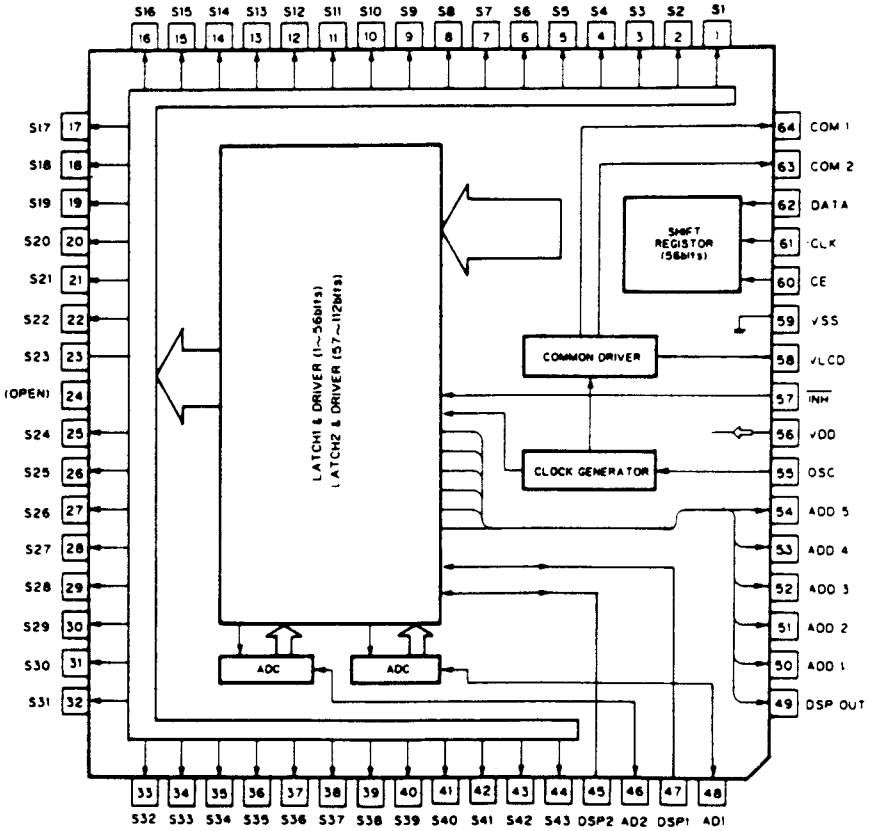

PA3027A

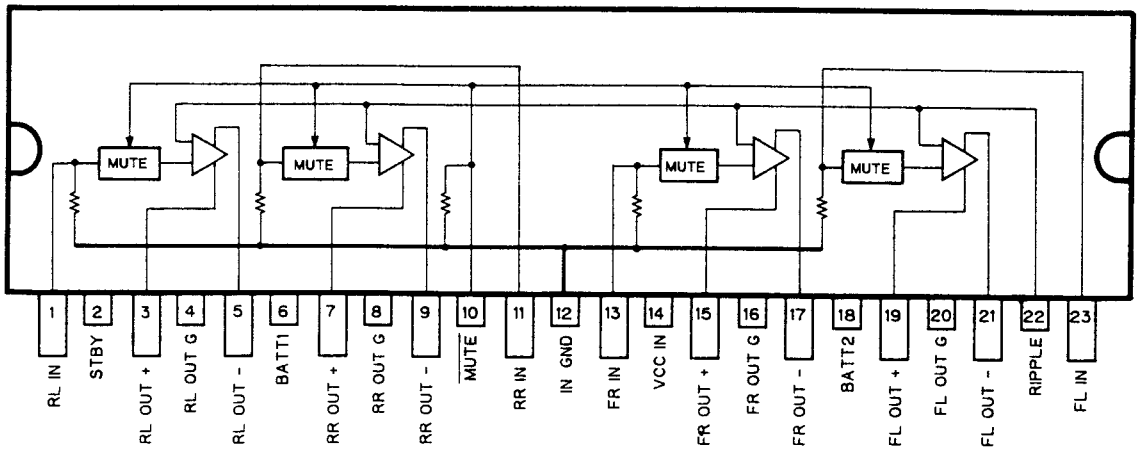

● **FM FRONT END (CWB1064)**

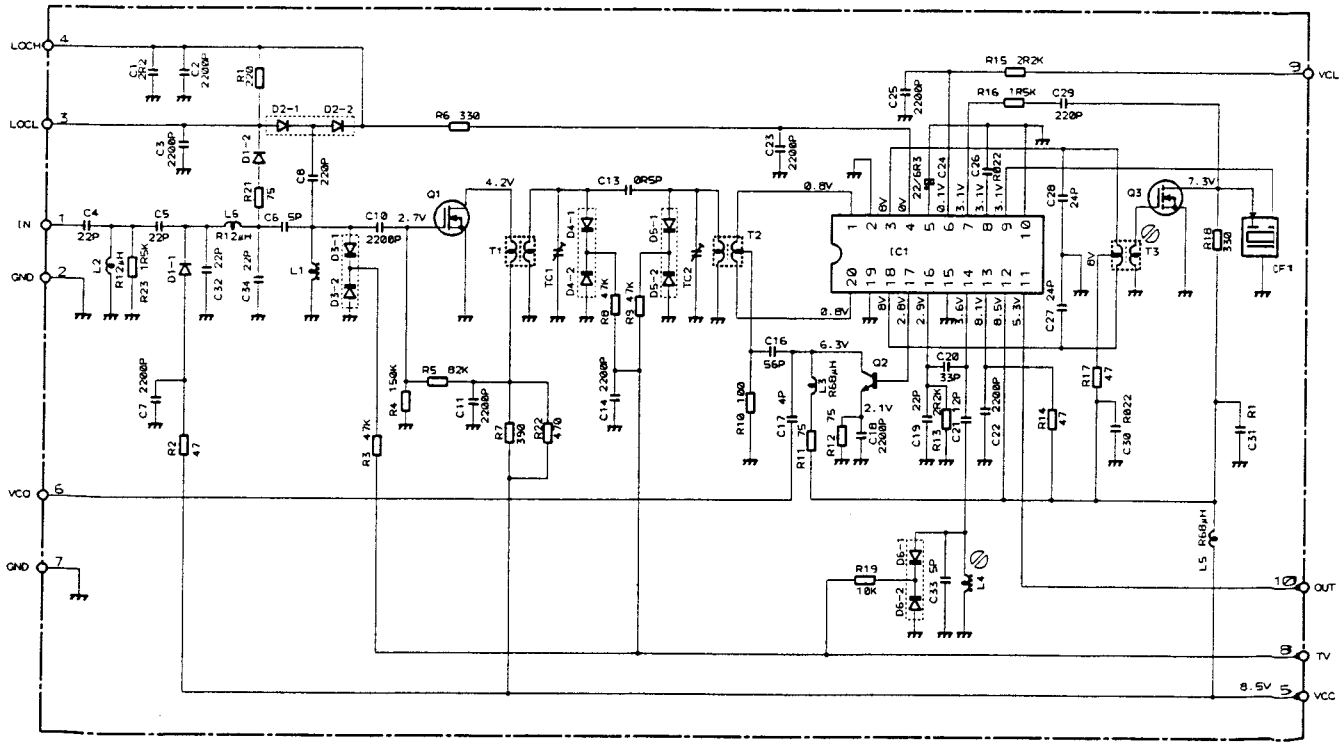

Fg. 12

www.manualscenter.com

● LCD(CAW1123)

SEGMENT

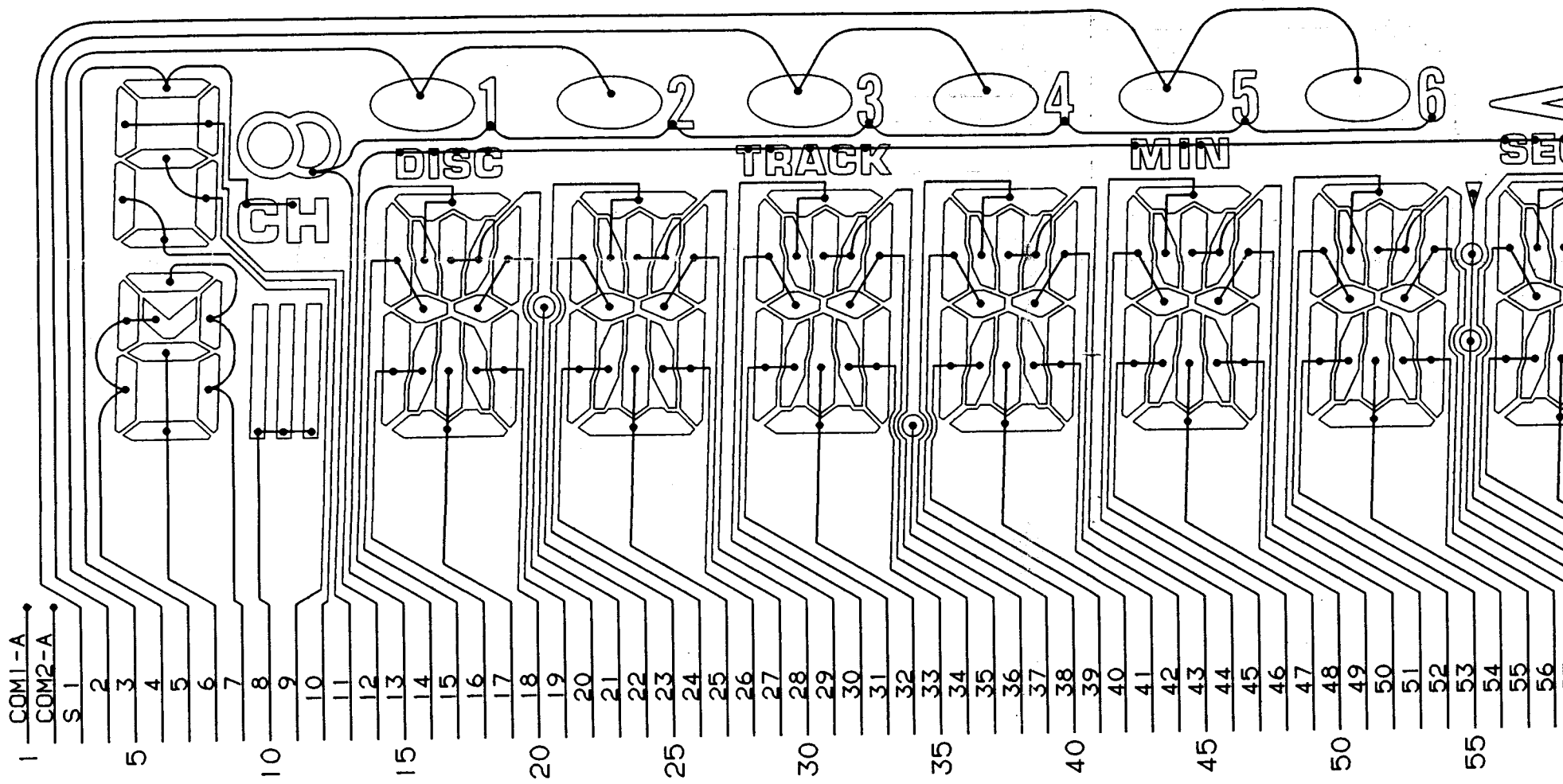

COMMON

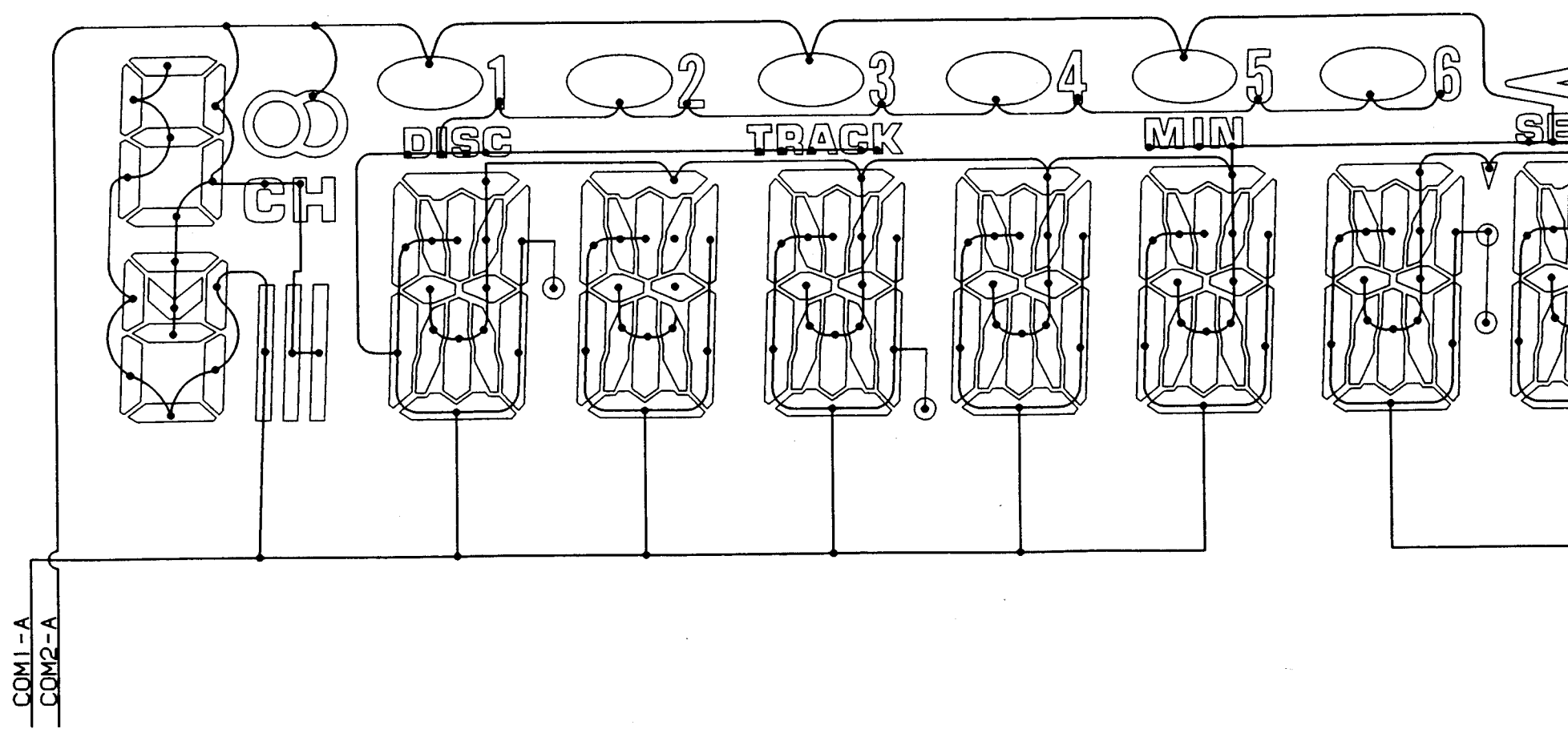

www.manualscenter.com

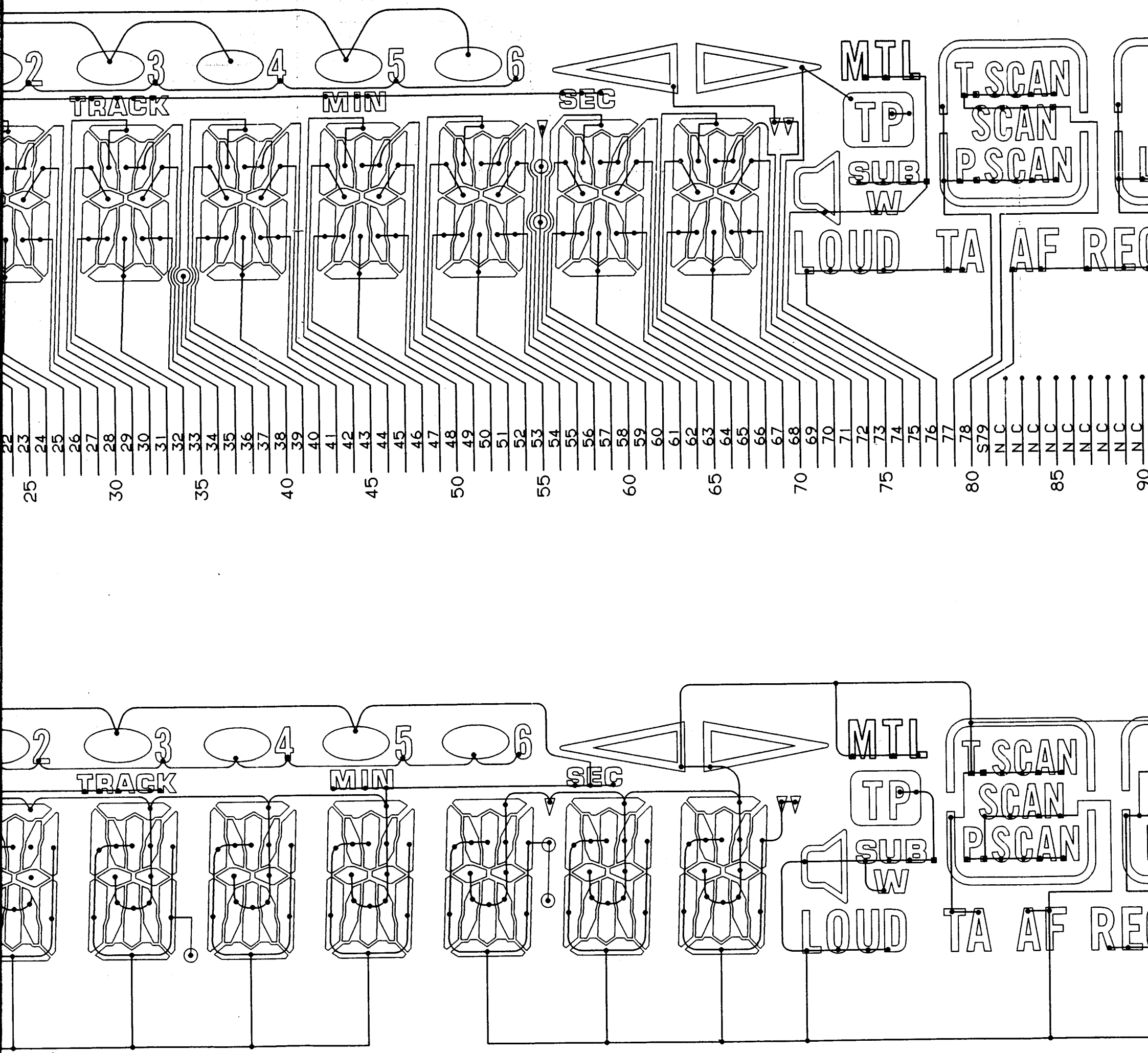

www.manualscenter.com

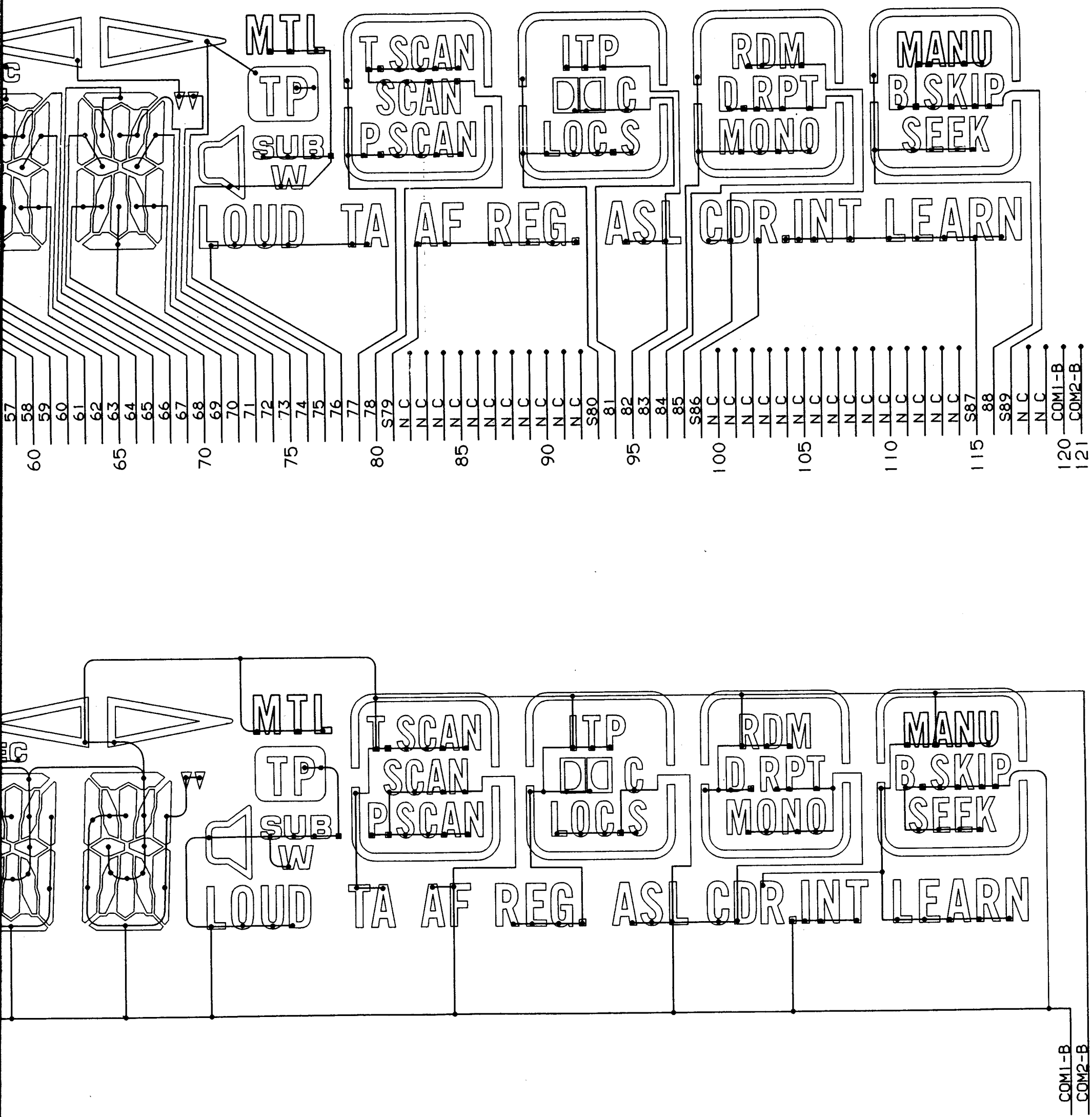

www.manualscenter.com

Fig. 13

www.manualscenter.com

7. CIRCUIT DIAGRAM AND P.C. BOARD PATTERN

7.1 MOTHER P.C. BOARD

● **Circuit Diagram**

NOTE:

Symbol indicates a resistor.
No differentiation is made between chip resistors and discrete resistors.

Symbol indicates a capacitor.
No differentiation is made between chip capacitors and discrete capacitors.

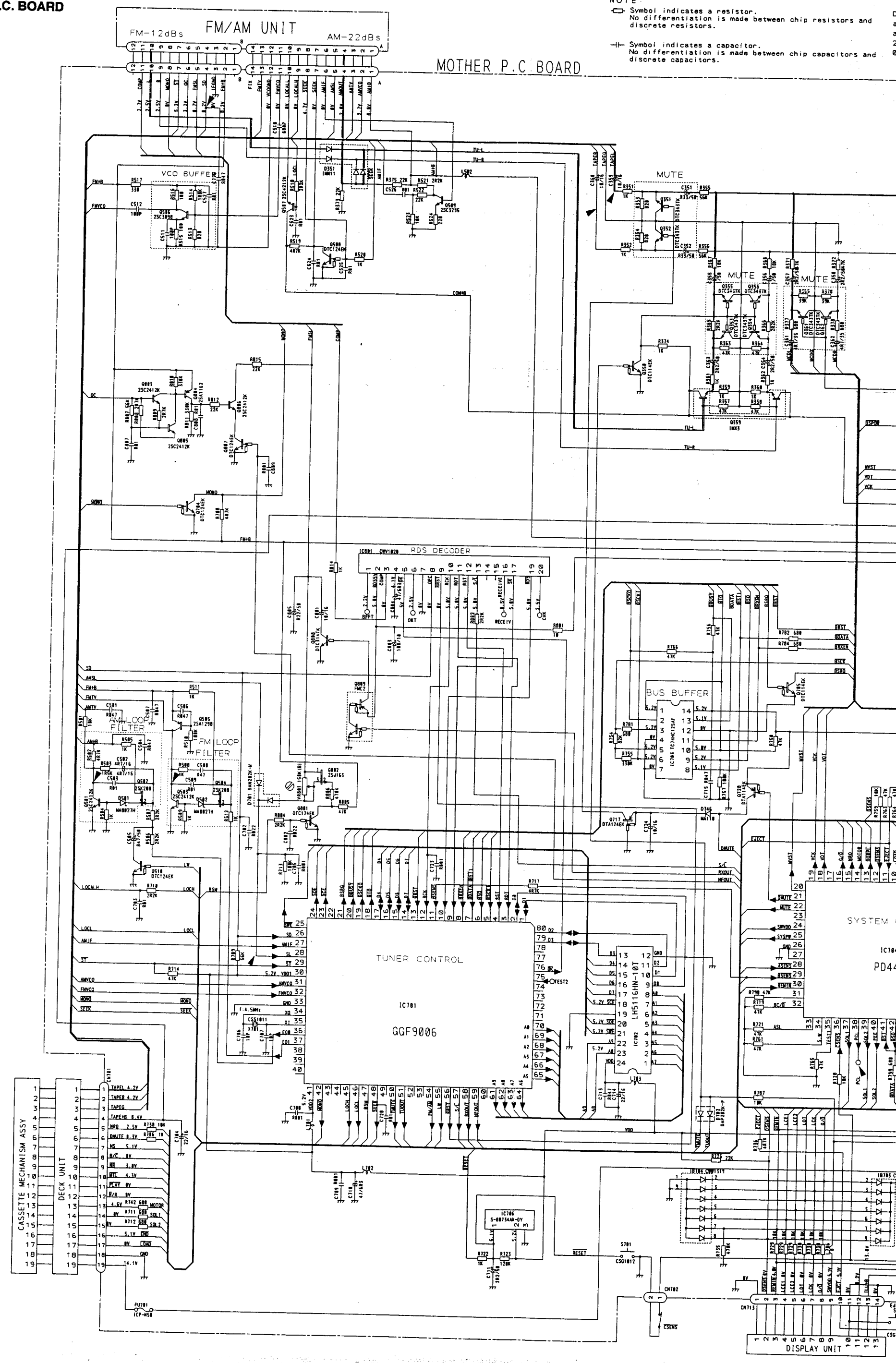

www.manualscenter.com

RN

NOTE:
- Symbol indicates a resistor. No differentiation is made between chip resistors and discrete resistors.
- Symbol indicates a capacitor. No differentiation is made between chip capacitors and discrete capacitors.

Decimal points for resistor and capacitor fixed values are expressed as:
2.2→2R2
0.022→R022

AUDIO TUNER UNIT
Consists of MOTHER P.C.BOARD POWER AMP P.C.BOARD

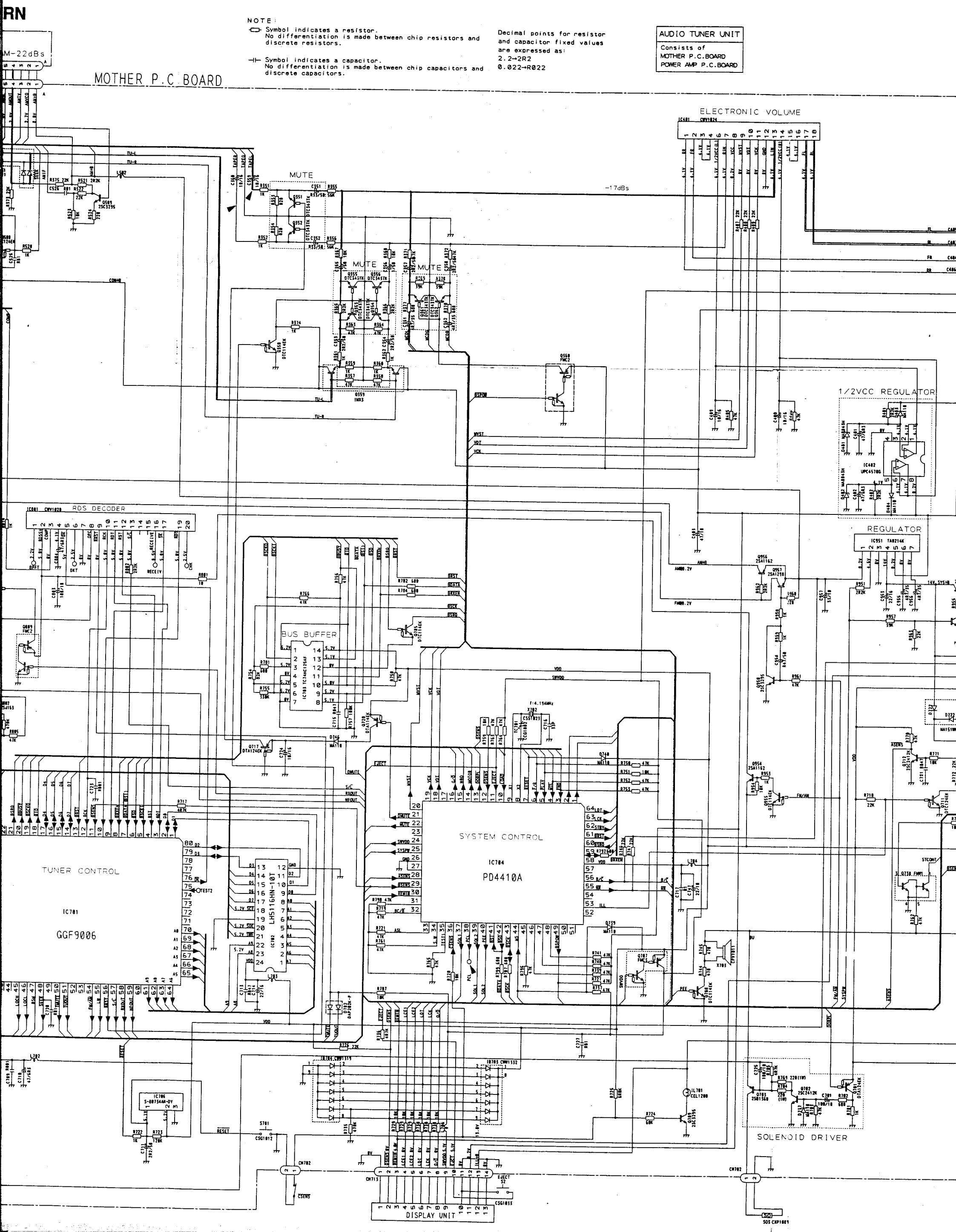

Decimal points for resistor and capacitor fixed values are expressed as:
2.2→2R2
0.022→R022

AUDIO TUNER UNIT

Consists of
MOTHER P.C.BOARD
POWER AMP P.C.BOARD

www.manualscenter.com

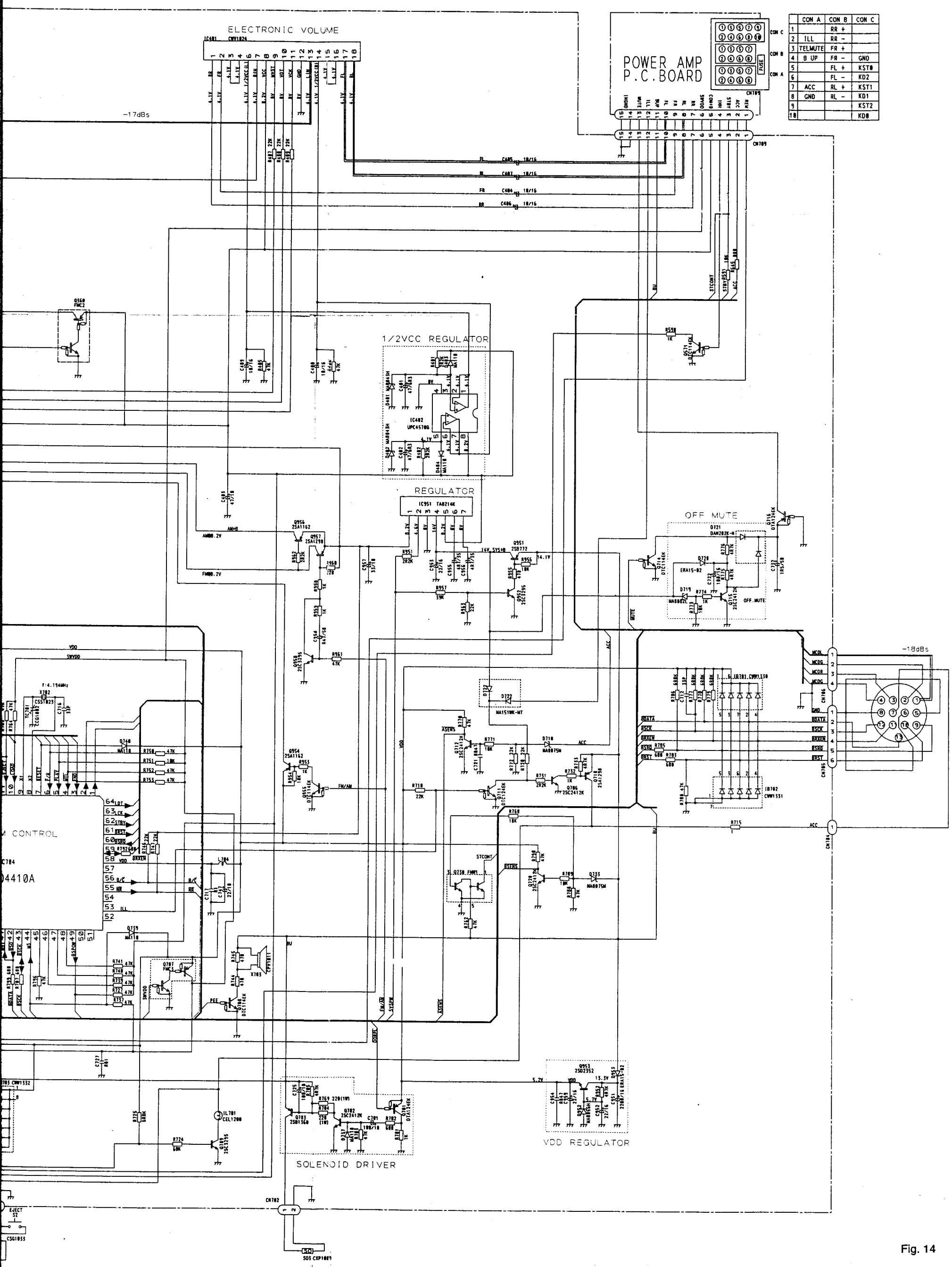

	CON A	CON B	CON C
1		RR +	
2	ILL	RR −	
3	TELMUTE	FR +	
4	B UP	FR −	GND
5		FL +	KST0
6		FL −	KD2
7	ACC	RL +	KST1
8	GND	RL −	KD1
9			KST2
10			KD0

Fig. 14

● Connection Diagram

www.manualscenter.com

www.manualscenter.com

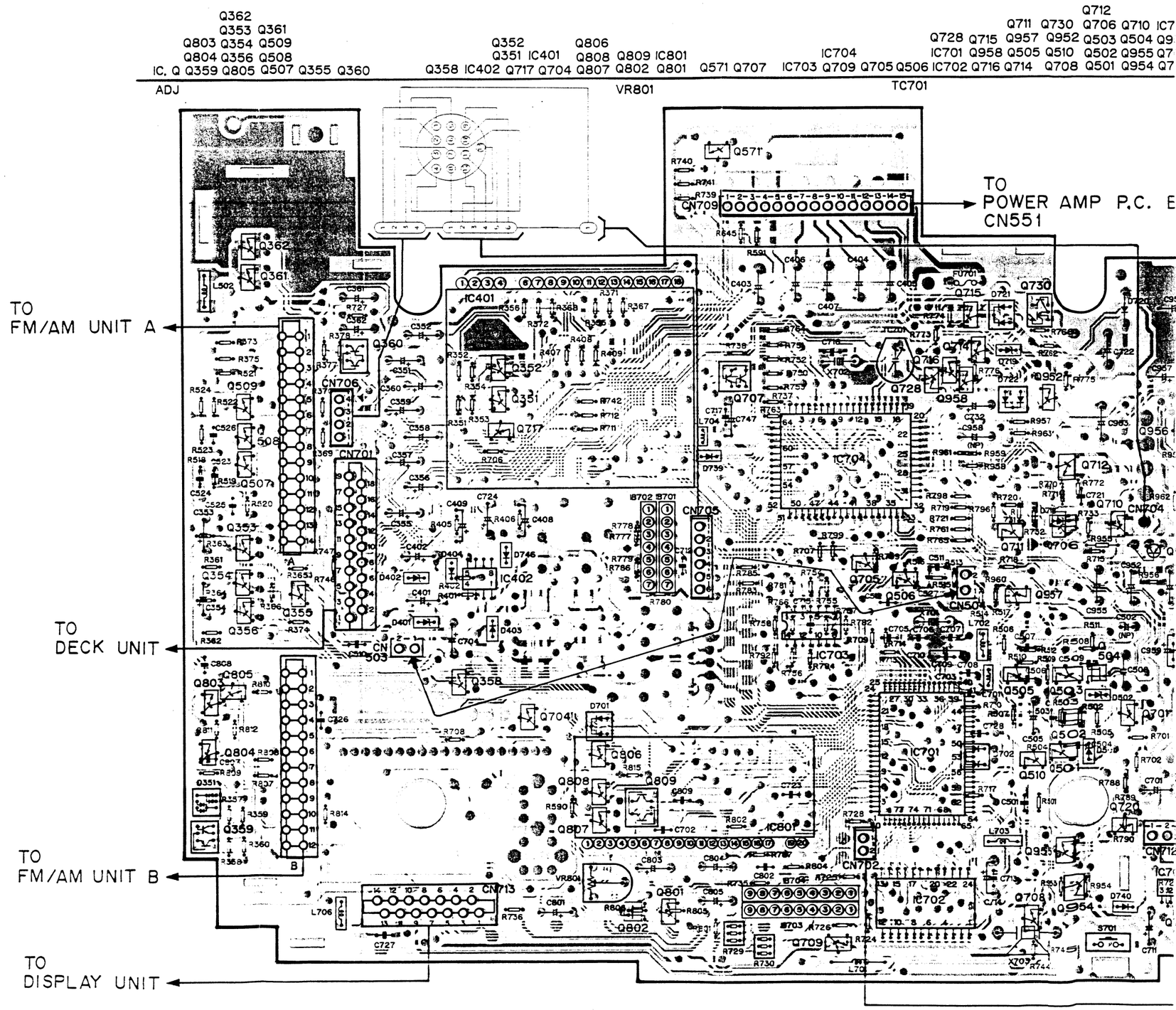

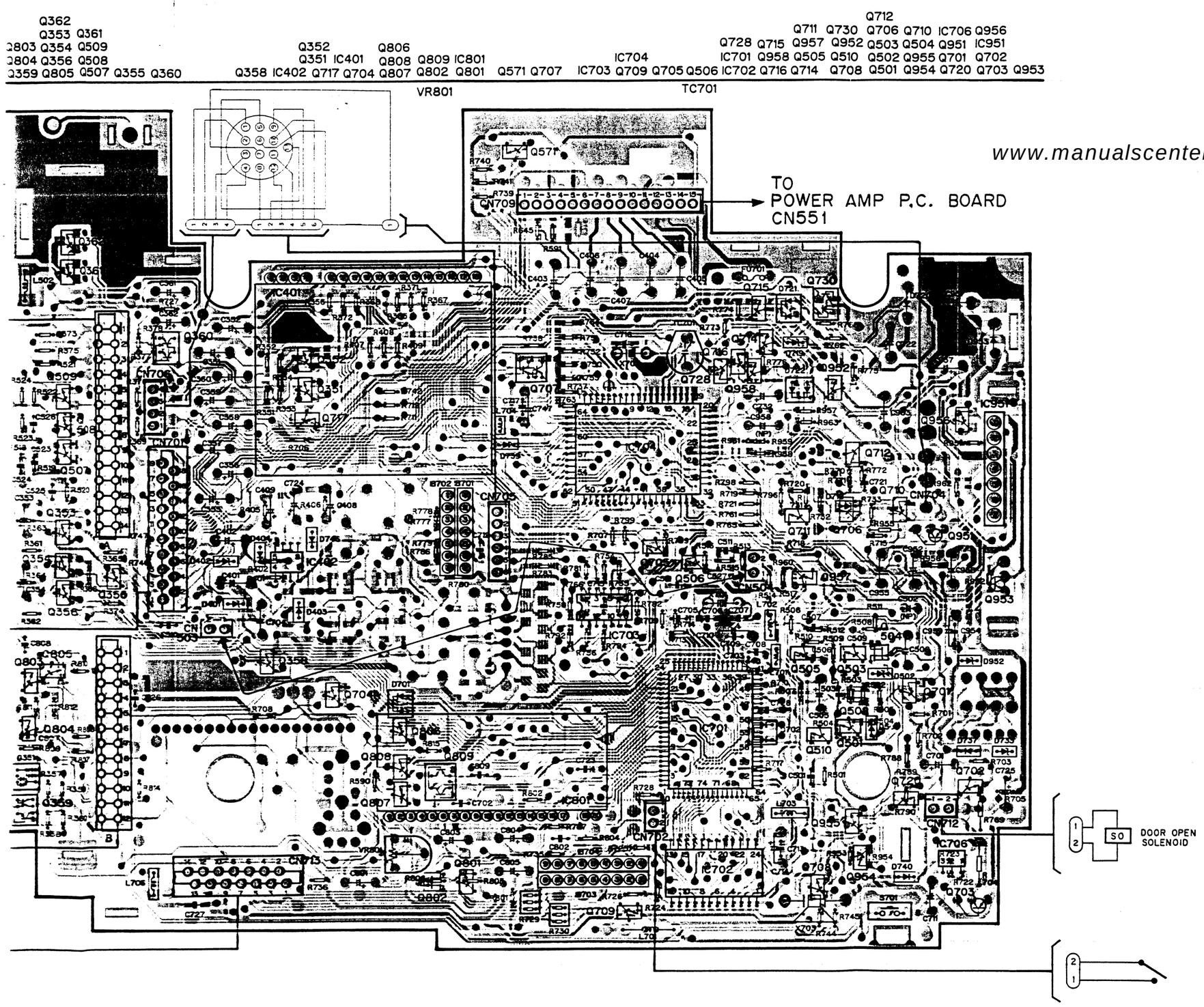

www.manualscenter.com

Fig. 15

www.manualscenter.com

7.2 DISPLAY UNIT (CXA-M9101ZRN)

● Circuit Diagram

NOTE:
Symbol indicates a resistor. No differentiation is made between discrete resistors.
Symbol indicates a capacitor. No differentiation is made between discrete capacitors.

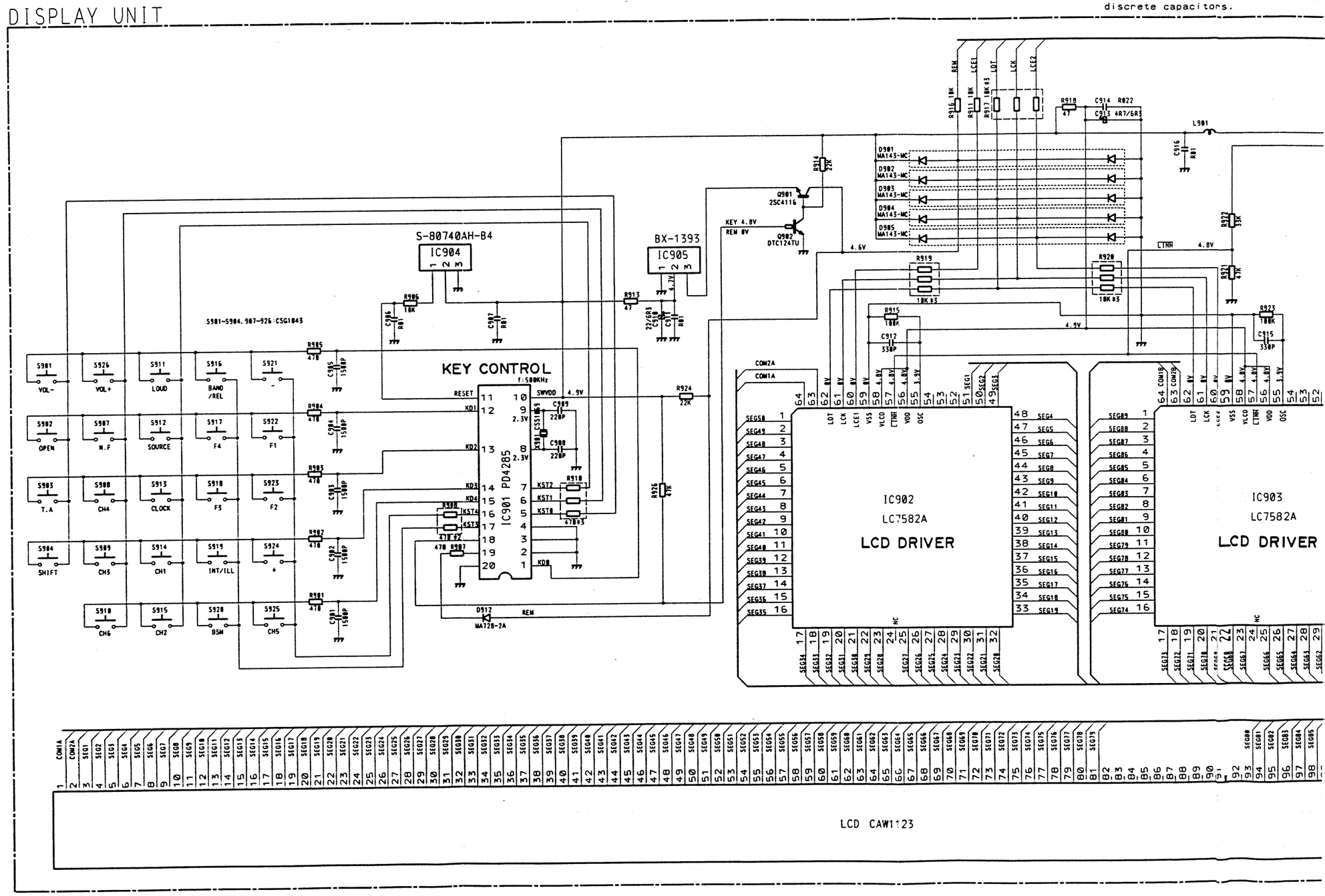

www.manualscenter.com

NOTE:

Symbol indicates a resistor.
No differentiation is made between chip resistors and discrete resistors.

Symbol indicates a capacitor.
No differentiation is made between chip capacitors and discrete capacitors.

Decimal points for resistor and capacitor fixed values are expressed as:
2.2→2R2
0.022→R022

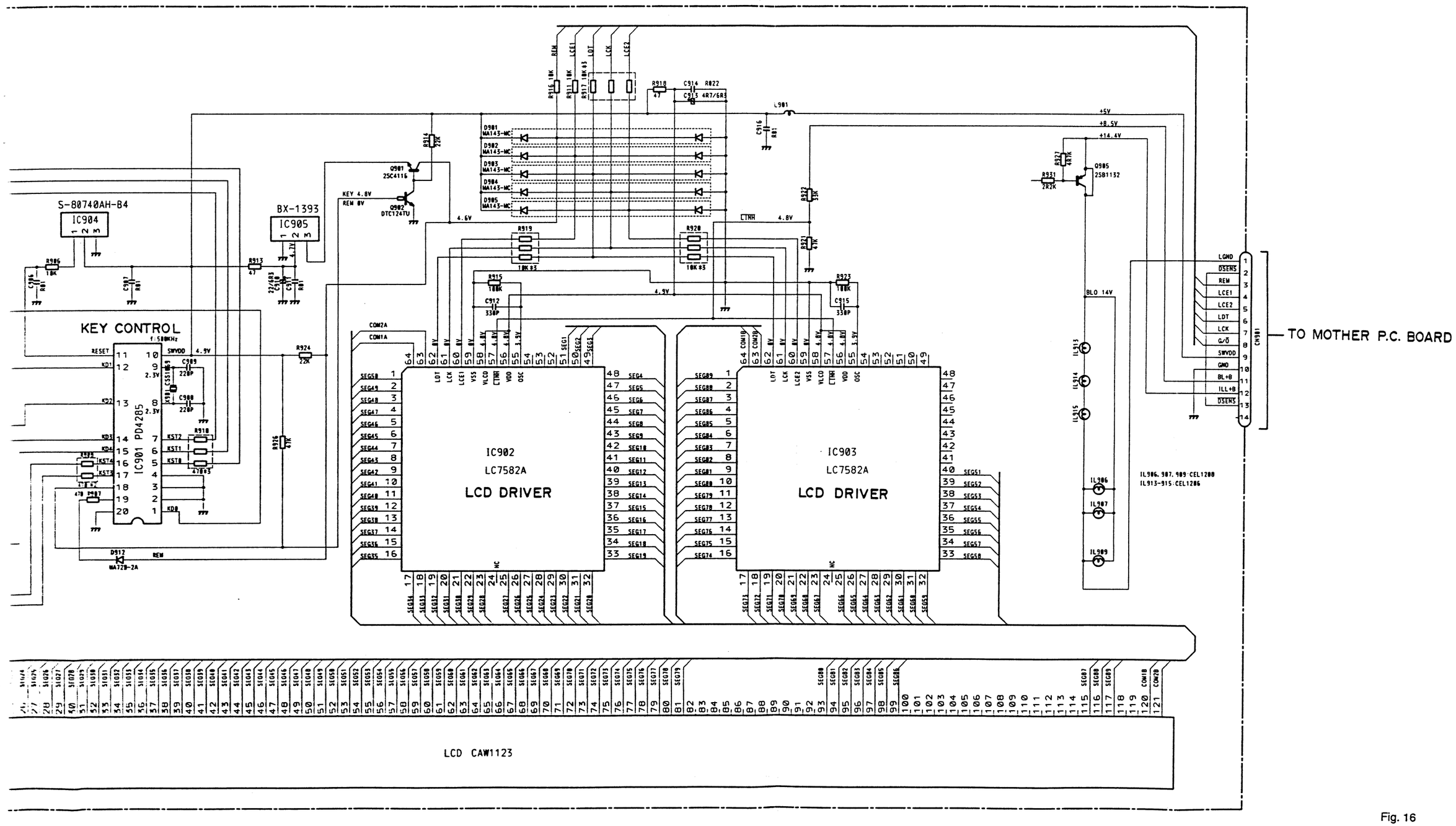

Fig. 16

● Connection Diagram

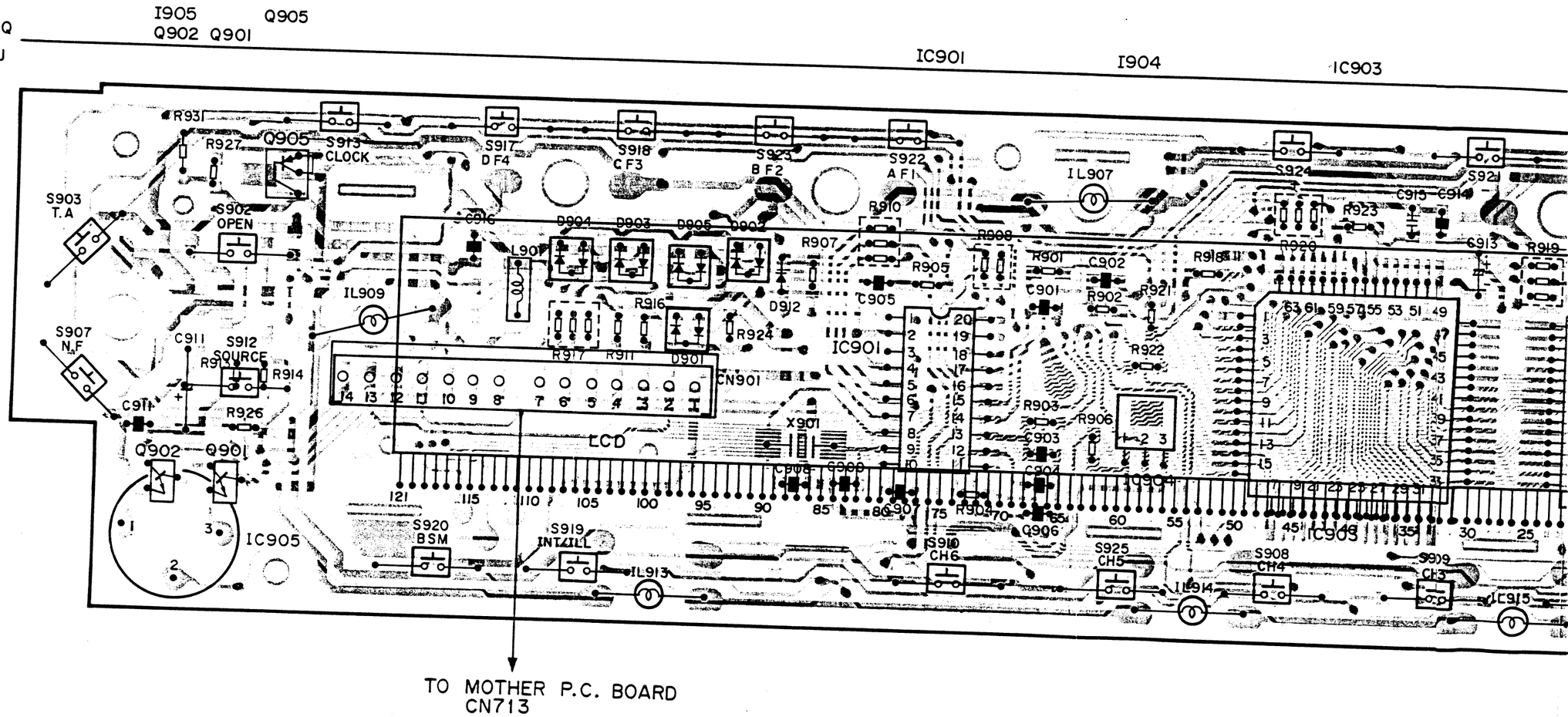

TO MOTHER P.C. BOARD
CN713

www.manualscenter.com

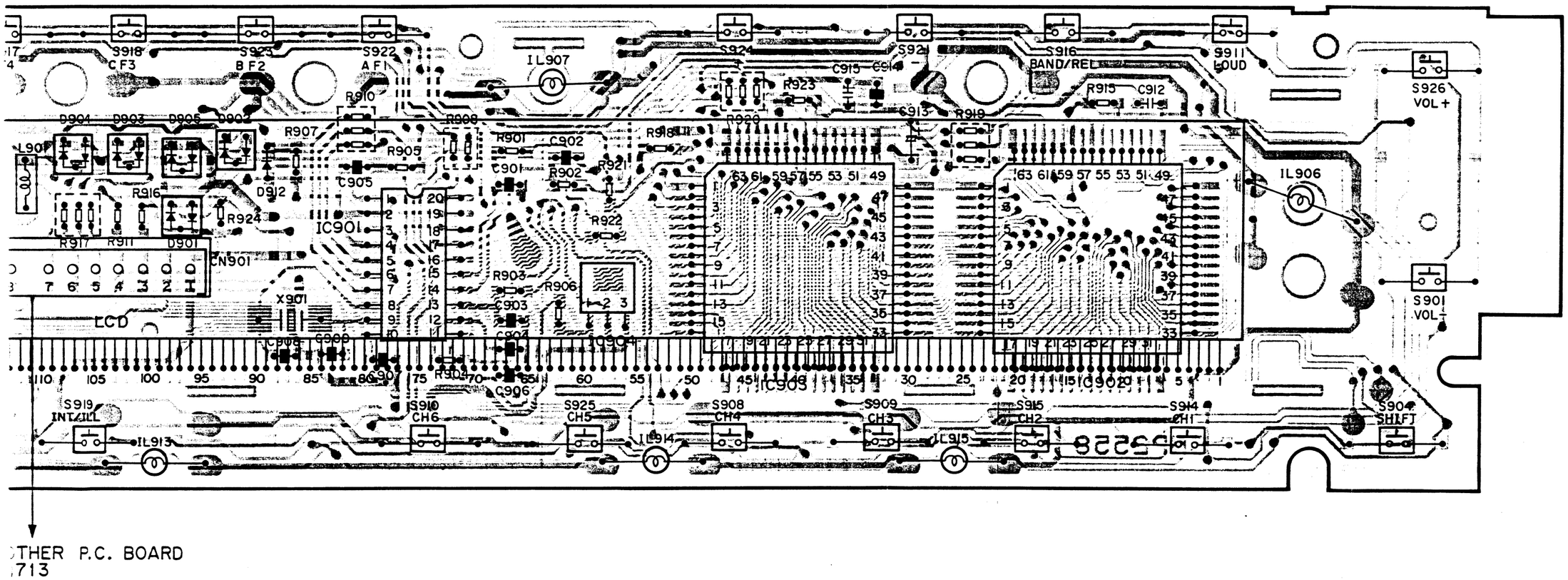

www.manualscenter.com

Fig. 17

7.3 POWER AMP P.C. BOARD

● Circuit Diagram

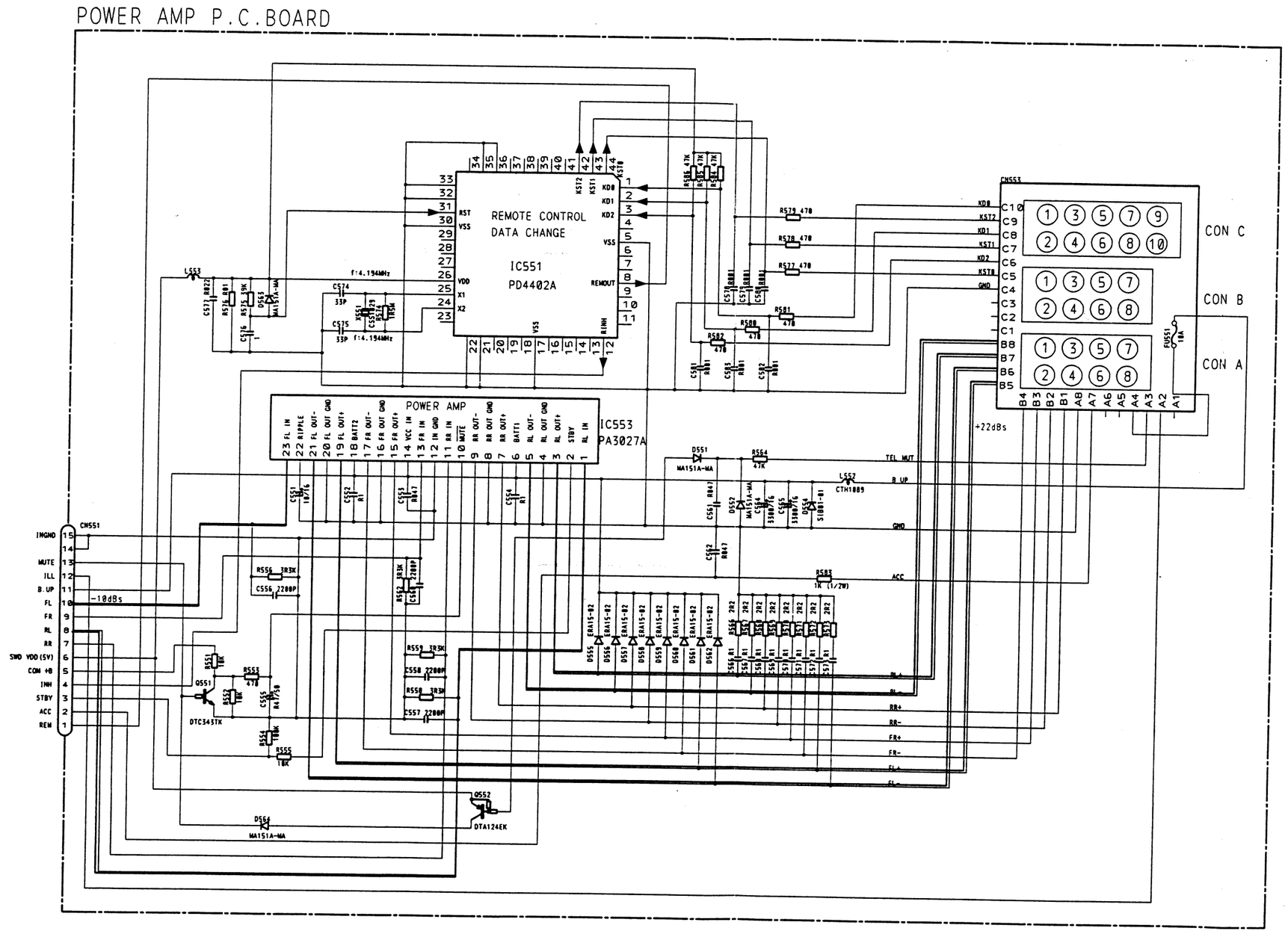

● Connection Diagram

IC, Q

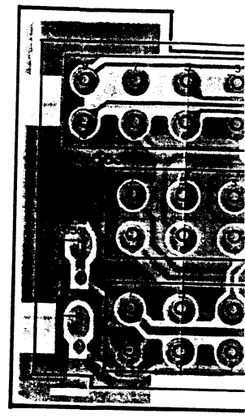

	CON A	CON B	CON C
1		R.R +	
2	ILL	R.R -	
3	TEL MUT	F.R +	
4	B.UP	F.R -	GND
5		F.L +	KST0
6		F.L -	KD2
7	ACC	R.L +	KST1
8	GND	R.L -	KD1
9			KST2
10			KD0

www.manualscenter.com

Fig. 18

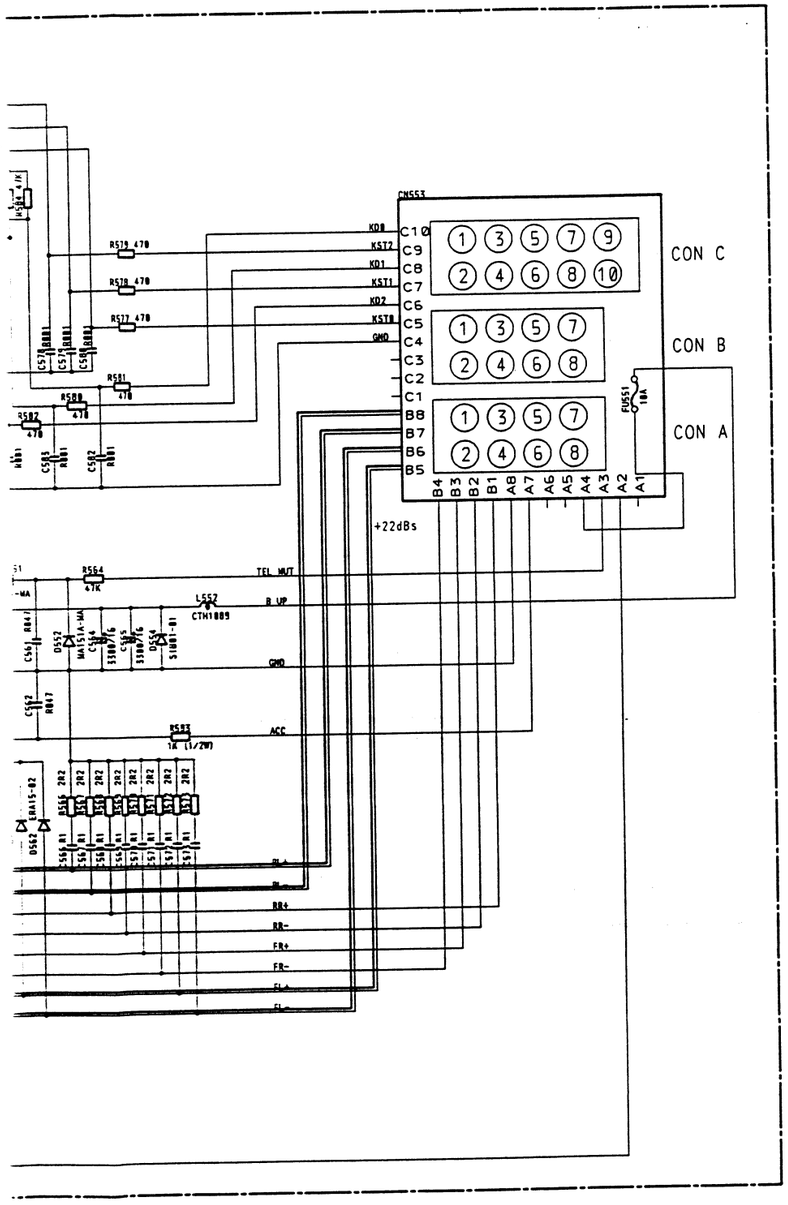

	CON A	CON B	CON C
1		R.R +	
2	ILL	R.R -	
3	TEL MUT	F.R +	
4	B.UP	F.R -	GND
5		F.L +	KST0
6		F.L -	KD2
7	ACC	R.L +	KST1
8	GND	R.L -	KD1
9			KST2
10			KD0

Fig. 18

● Connection Diagram

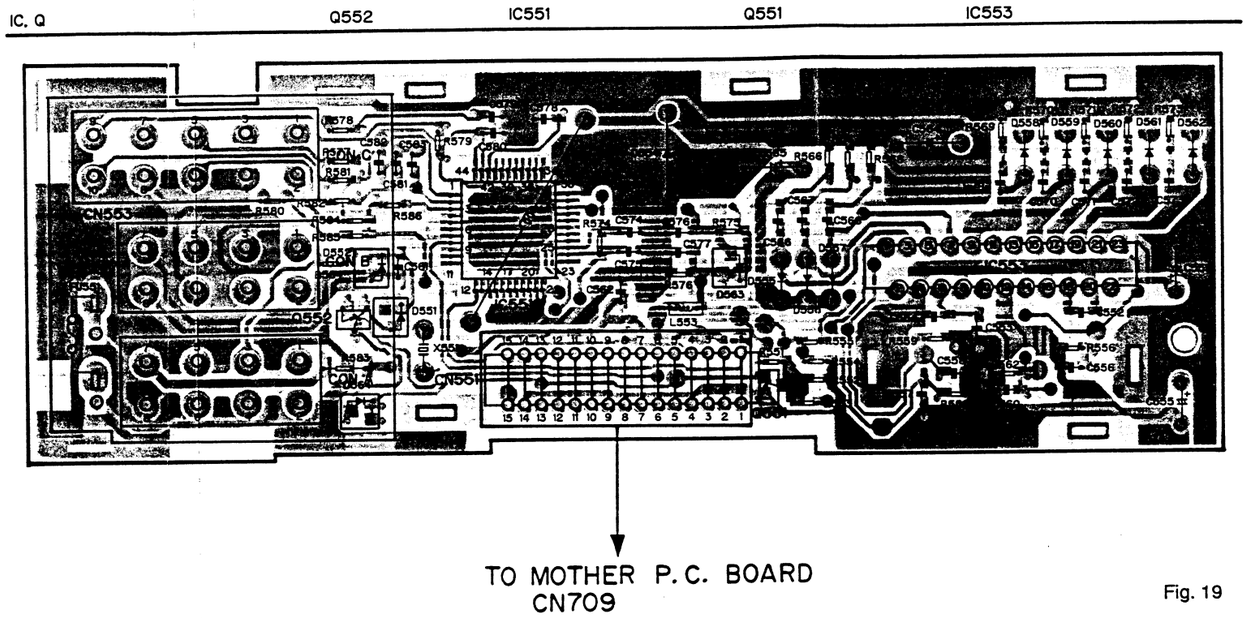

Fig. 19

www.manualscenter.com

7.4 DECK UNIT AND CASSETTE MECHANISM ASSY

● Circuit Diagram

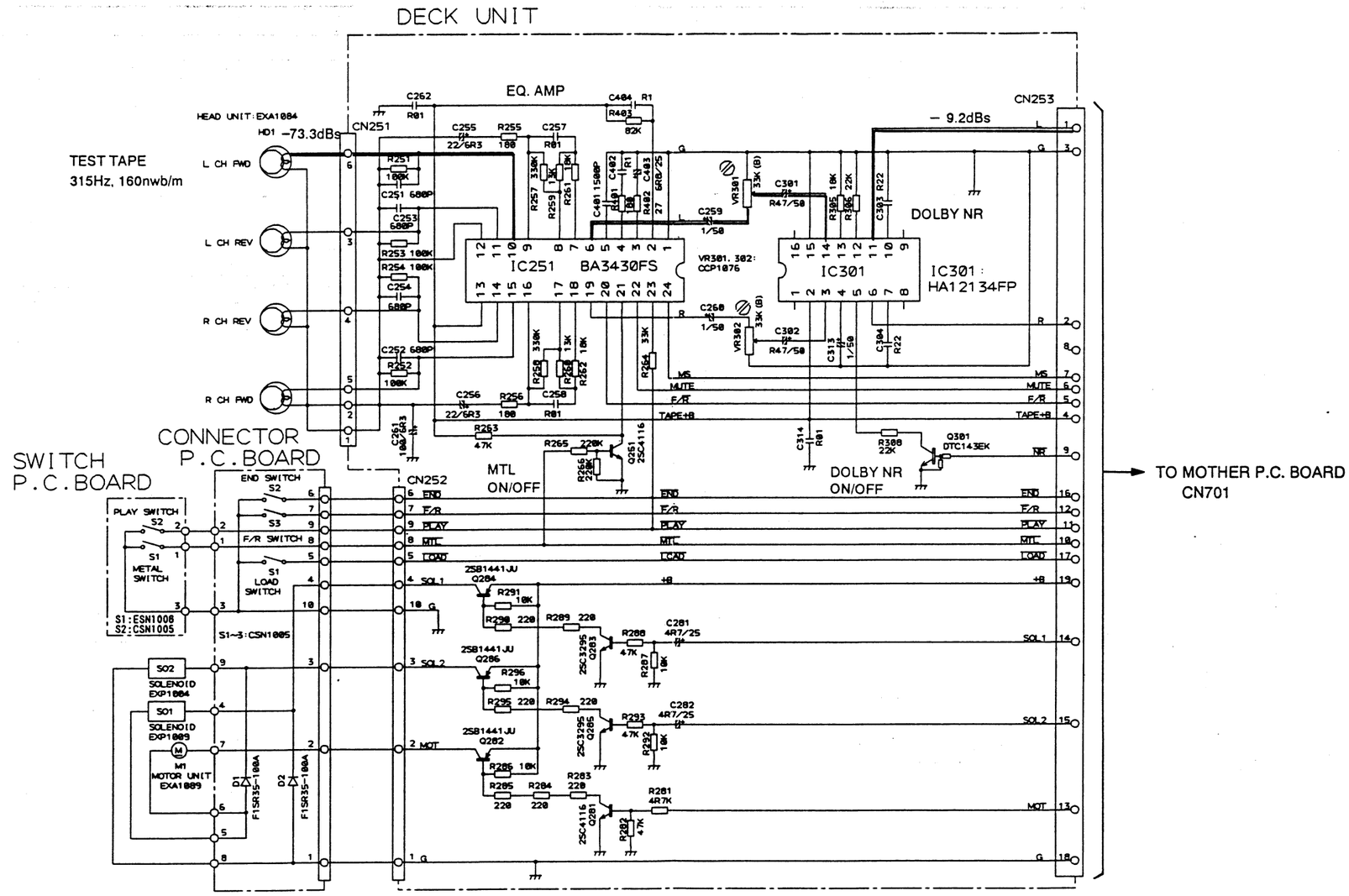

● Connection Diagram

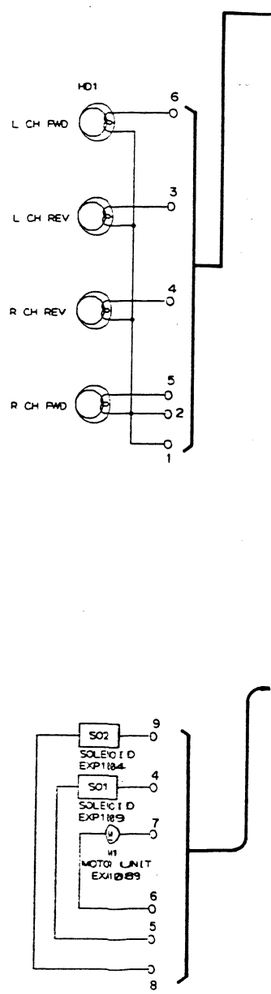

NOTE:

⊟ Symbol indicates a resistor.
No differentiation is made between chip resistors and discrete resistors.

⊣⊢ Symbol indicates a capacitor.
No differentiation is made between chip capacitors and discrete capacitors.

Decimal points for resistor and capacitor fixed values are expressed as:
2.2→2R2
0.022→R022

www.manualscenter.com

Fig. 20

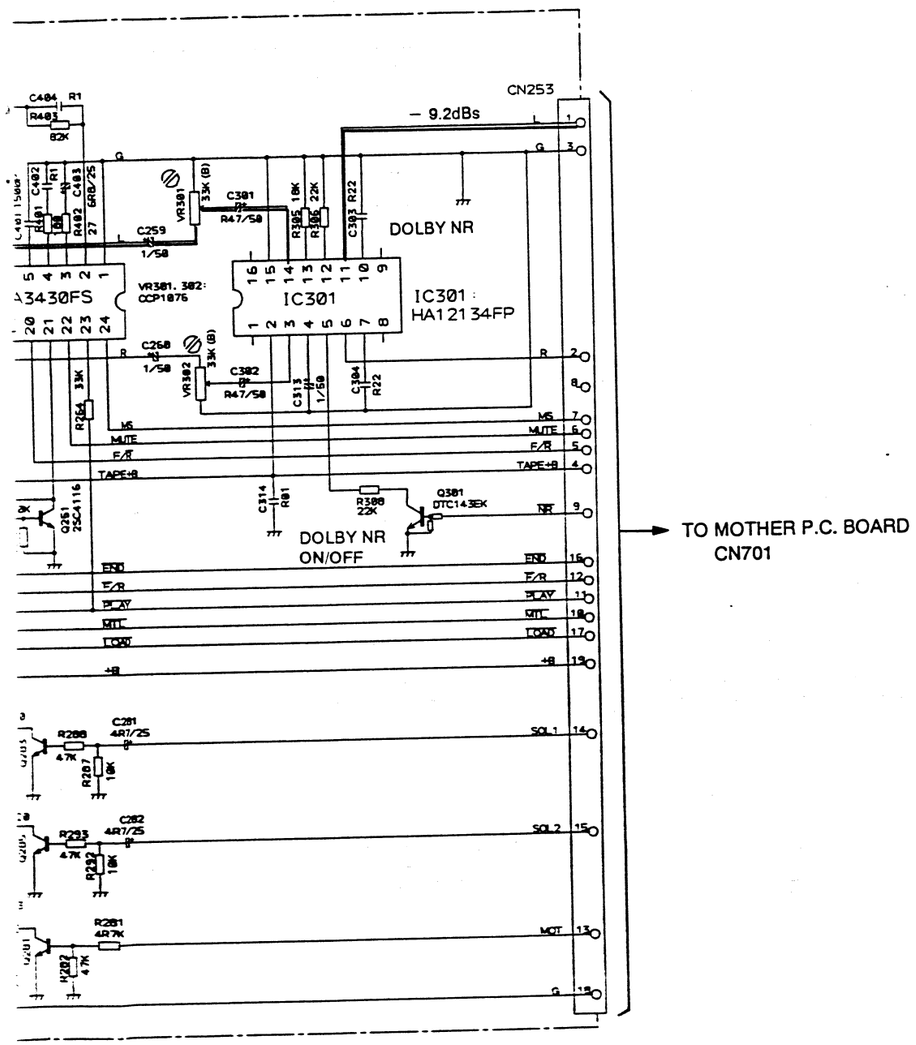

Fig. 20

● Connection Diagram

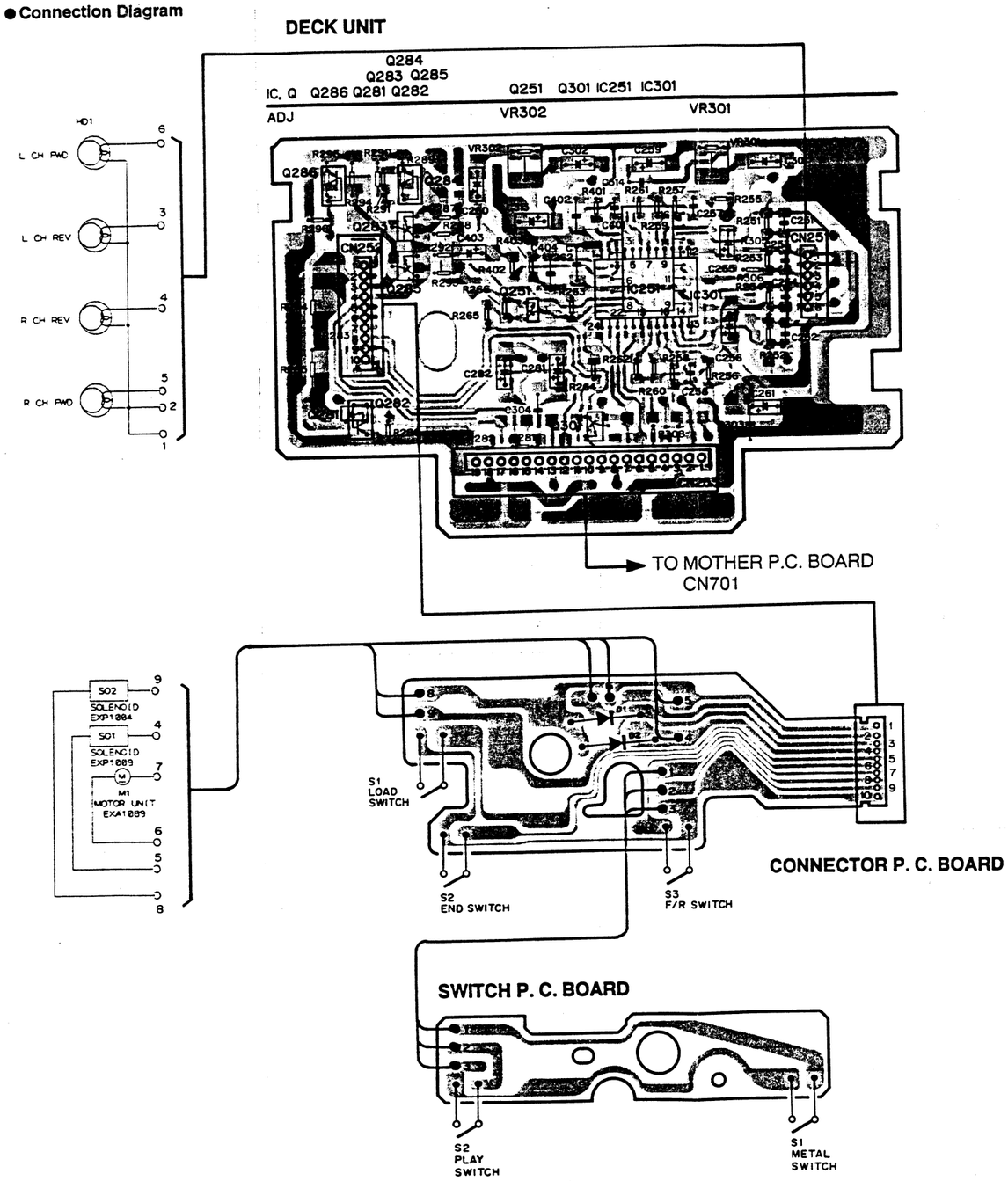

Fig. 21

www.manualscenter.com

● Connection Diagram

NOTE

Symbol indicates a resistor.
No differentiation is made between chip resistors and discrete resistors.

Symbol indicates a capacitor.
No differentiation is made between chip capacitors and discrete capacitors.

Decimal points for resistor and capacitor fixed values are expressed as
2.2→2R2
0.022→R022

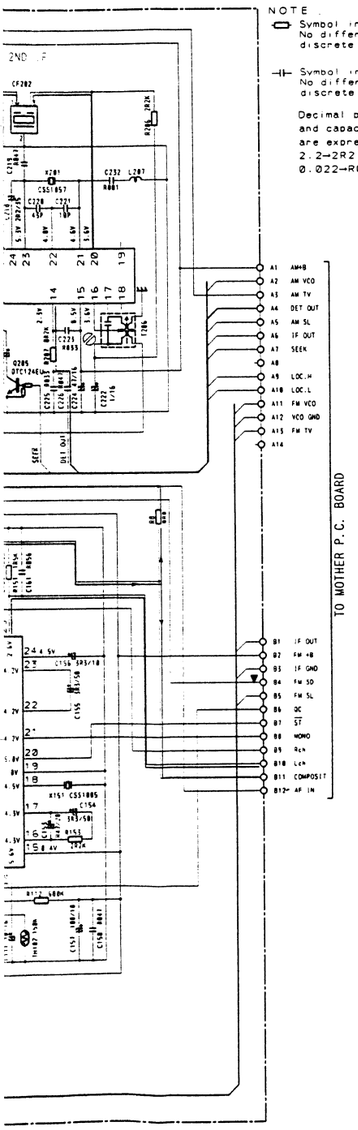

Fig. 22

FM/AM UNIT IC201

1	2	3	4	5	6	7	8	9
	3.4V	3.4V	0V	4.7V			6.9V	4.7V
10	11	12	13	14	15	16	17	18
		0V	2.3V	2.3V	8.5V	3.6V		
19	20	21	22	23	24	25	26	27
	3.6V	4.6V	4.0V	5.3V		8.2V	8.2V	
28	29	30	31	32	33	34	35	36
3.3V	0V	8.2V	8.2V		5.4V		2.7V	

FM/AM UNIT IC51

1	2	3	4	5	6	7	8
3.4V	0.8V	0.2V	0.3V	0V	3.5V	0V	8.4V
9	10	11	12	13	14	15	16
3.5V	4.8V	1.5V	2.9V	0V	5.6V	8.4V	4.3V
17	18	19	20	21	22	23	24
4.3V	4.5V	0V	5.0V	4.2V	4.2V	4.2V	4.5V
25	26	27	28	29	30	31	32
2.6V	2.6V	4.4V	0.7V	4.3V	4.3V	0V	8.4V
33	34	35	36	37	38	39	40
4.3V	0V	4.3V	2.9V	4.3V	4.3V	4.3V	4.1V
41	42	43	44	45	46	47	48
5.0V	5.0V		0V	2.2V	2.2V	2.2V	0.4V

www.manualscenter.com

IC, Q Q205 IC201 Q241 Q201 Q203 Q1 Q2 Q122 Q121 Q123 Q3 Q71 IC51 Q101

ADJ T206 T205 T204 T203 VR1 T71 T51 VR51 T52 VR101 VR102

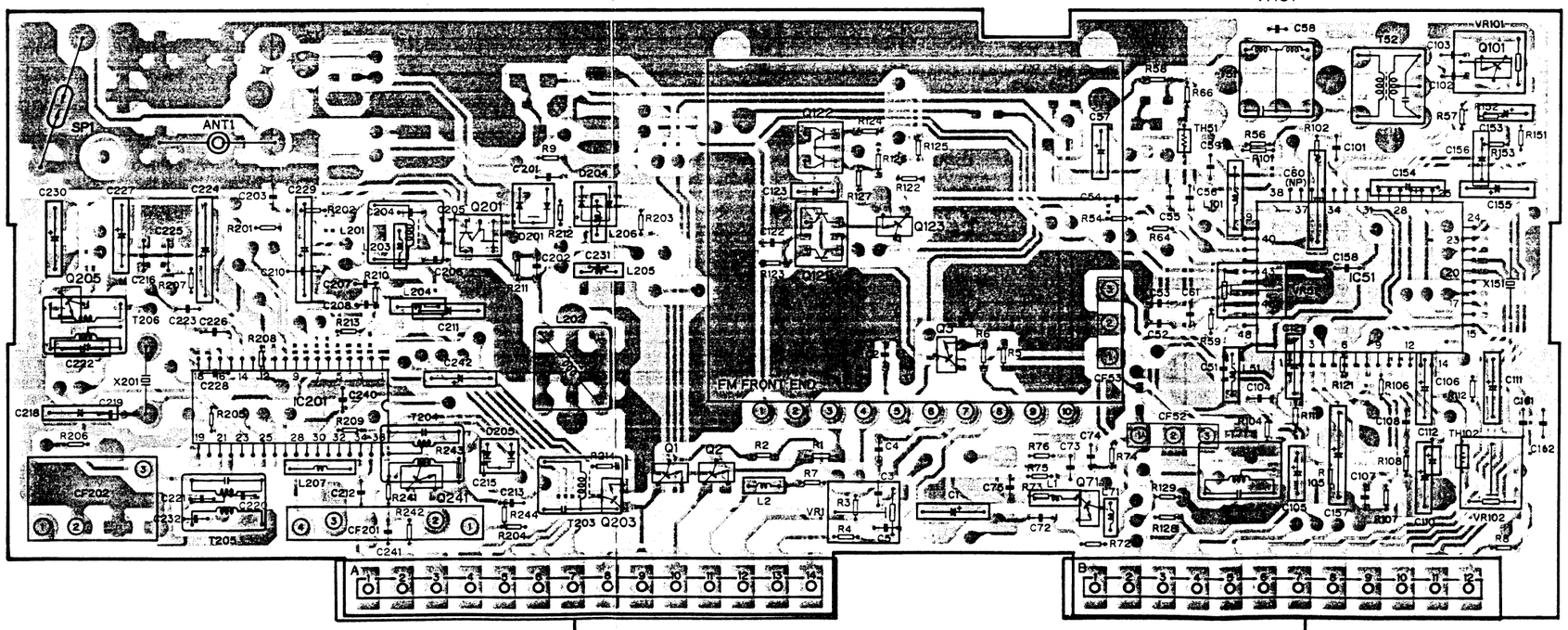

Fig. 23

'.5 FM/AM UNIT

) Circuit Diagram

www.manualscenter.com

NOTE

Symbol indicates a resistor.
No differentiation is made between chip resistors and discrete resistors.

Symbol indicates a capacitor.
No differentiation is made between chip capacitors and discrete capacitors.

Decimal points for resistor and capacitor fixed values are expressed as
2.2→2R2
0.022→R022

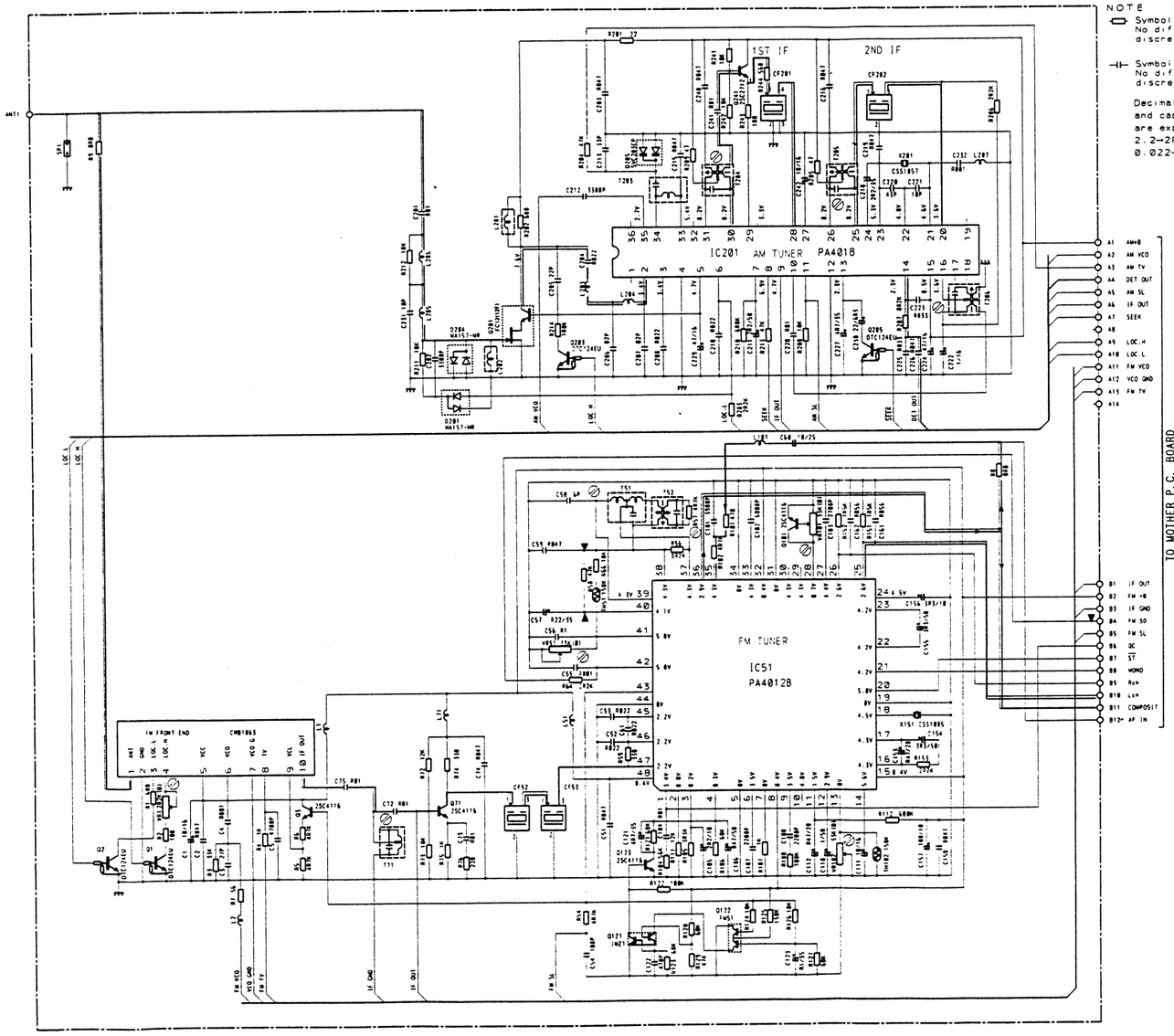

❶ Connection Diagram

FM/AM UNIT IC201

1	2	3	4	5	
	3.4V	3.4V	0V	4.7V	
10	11	12	13	14	
		0V	2.3V	2.3V	
19	20	21	22	23	
	3.6V	4.6V	4.0V	5.3V	
28	29	30	31	32	
3.3V	0V	8.2V	8.2V		

IC, Q Q205 IC201 Q241 Q201 Q2
ADJ T206 T205 T204 T203

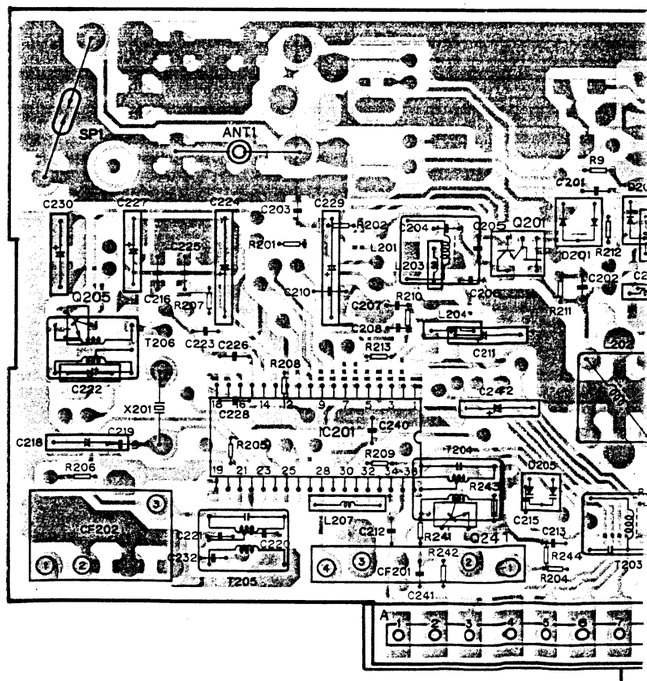

Fig. 22

8. CASSETTE MECHANISM EXPLODED VIEW

NOTES:
- *Parts marked by "✱" or "✱" are generally unavailable because they are not in our Master Spare Parts List.*
- *Parts marked by "●" are not always kept in stock. Their delivery time may be longer than usual or they may be unavailable.*

● Part List

Mark No.	Description	Part No.	Mark No.	Description	Part No.
1	Spring	EBH1121	41	Collar	ENV1117
2	Arm Unit	EXA1202	42	Spring	EBH1155
3	Cassette Holder	ENC1165	43	Gear	ENV1116
4	Screw	CBA1070	44	Spring	EBH1190
5	Screw	EBA1016	45	Pinch Roller Unit	EXA1043
6	Spring	EBL1011	46	Shaft	ELA1129
7	Screw	HBA-175	47	Gear	ENV1113
8	Head Unit	EXA1137	48	Gear	ENV1111
9	Spacer	ENV1136	49	Spring	EBH1138
10	Screw	BMZ20P025FMC	50	Spring	EBH1142
11	Spring	EBH1145	51	Arm	ENV1138
12	Washer	EBE1005	52	Gear	ENV1109
13	Arm	ENC1155	53	Collar	ELA1161
14	Spring	EBH1187	54	Gear	ENV1110
15	Head Base Unit	EXA1115	55	Gear Unit	EXA1083
16	Roller	ELA1147	56	Gear	ENV1112
17	Washer	CBF1037	57	Arm Unit	EXA1075
18	·····		58	Spring	EBH2002
19	Roller	ELA1146	59	Arm	ENC1152
20	Spring	EBH1131	60	Arm	ENC1151
21	Screw	BMZ20P030FMC	61	Spring	EBH1136
22	Cover	ENC1166	62	Spring	EBH2003
23	Lever	ENC1159	63	Arm	ENC1149
24	Spring	EBH1183	64	Spring	EBH1182
25	Lever	ENV1124	65	Washer	HBF-120
26	Roller	ELA1264	66	Arm	ENV1121
27	Washer	YE15FUC	67	Gear	ENV1142
28	Arm	ENC1174	68	Lever Unit	EXA1078
29	Damper Unit	CXA3242	69	Spring	EBH1189
30	Spring	EBH2007	70	Spring	EBH1153
31	Lever Unit	EXA1079	71	Washer	YE20FUC
32	Lever Unit	EXA1074	72	Arm	ENC1150
33	Roller	ELA1149	73	Switch	CSN1005
34	Washer	CBF1038	74	P.C.Board	ENP1023
35	Gear	ENV1134	75	Screw	CBA-172
36	Spring	EBH1139	76	Motor Unit	EXA1089
37	Arm	ENC1170	77	Screw	PMS20P022FUC
38	Arm	ENC1148	78	Solenoid	EXP1009
39	Arm	ENC1147	79	Gear	ENV1106
40	Spring	EBH1186	80	Chassis Unit	EXA1136

www.manualscenter.com

Mark No.	Description	Part No.	Mark No.	Description	Part No.
81	Screw	PMS20P025FMC	106	Belt	ENT1014
82	Bracket	ENC1163	107	Cover	ENC1167
83	Screw	CBA1070	108	Lever	ENC1164
84	P.C.Board	ENP1021	109	Spring	EBH1147
85	Screw	CBA1076	110	Lever	ENC1160
86	Solenoid	EXP1004	111	Arm	ENC1156
87	Spring	EBH1157	112	Arm Unit	EXA1111
88	Gear	ENV1108	113	Spring	EBH1146
89	Collar	ELA1151	114	Clamper	ENV1141
90	Arm Unit	EXA1076	115	Spring	EBH1151
91	Gear	ENV1114	116	Lever	ENC1171
92	Spring	EBH1141	117	Spring	EBH1149
93	Clamper	ENV1140	118	Spring	EBH1135
94	Arm Unit	EXA1090	119	Spring	EBH1148
95	Spring	EBH1169	120	Guide Unit	EXA1100
96	Arm	ENC1153	121	Gear	ENV1118
97	Spring	EBH1140	122	Arm	ENC1157
98	Collar	ELA1162	123	Spring	EBH1158
99	Screw	JFZ20P045FNI	124	Lever	ENC1161
100	Lever	ENC1158	125	Switch(Metal)	ESN1006
101	Arm Unit	EXA1099			
102	E Type Washer	CBG1003			
103	Washer	HBF-179			
104	Flywheel	ENV1128			
105	Flywheel	ENV1127			

● Cassette Mechanism Assy

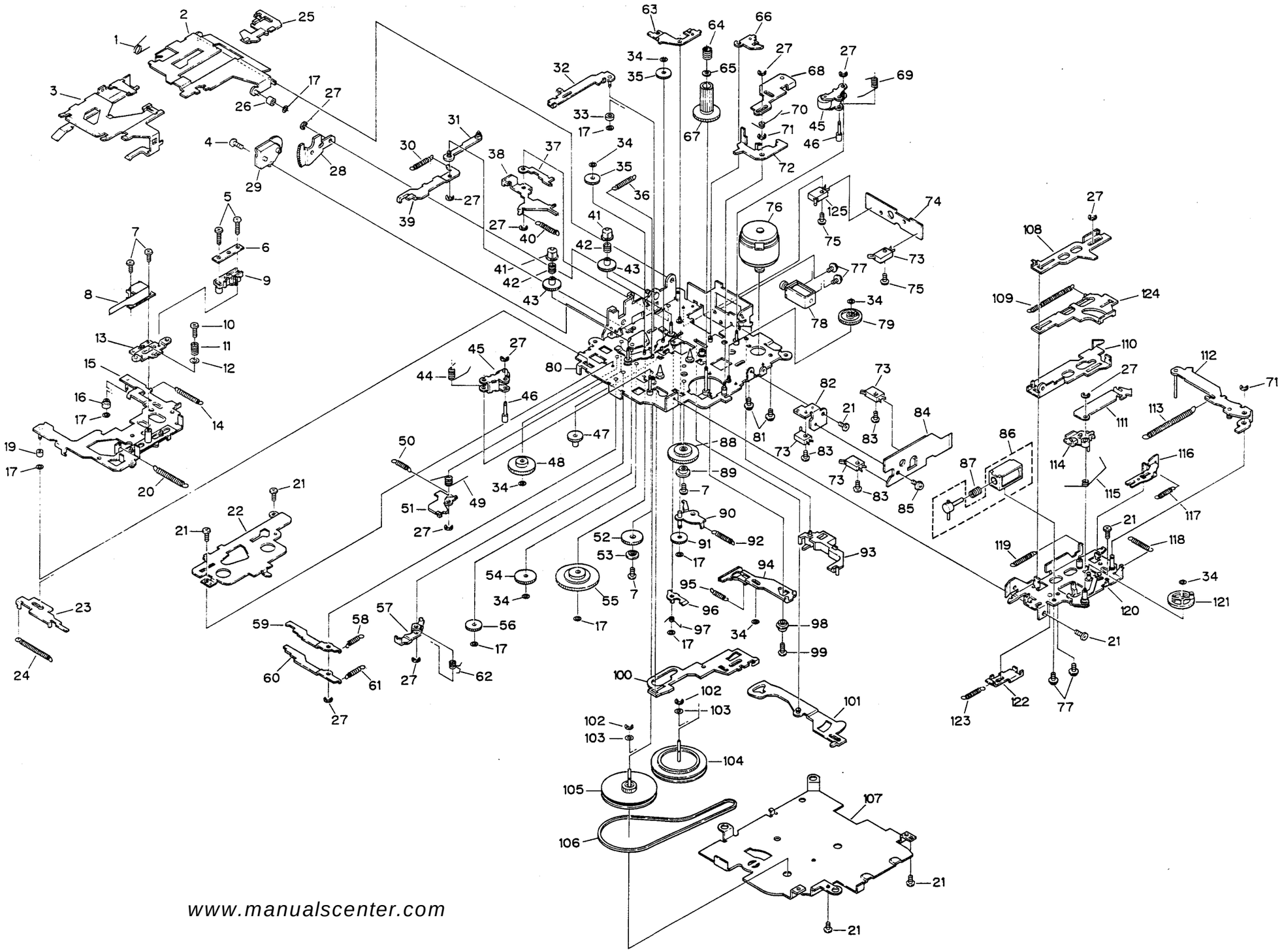

Fig. 24

www.manualscenter.com

9. EXPLODED VIEW (KEH-M9100ZRN)

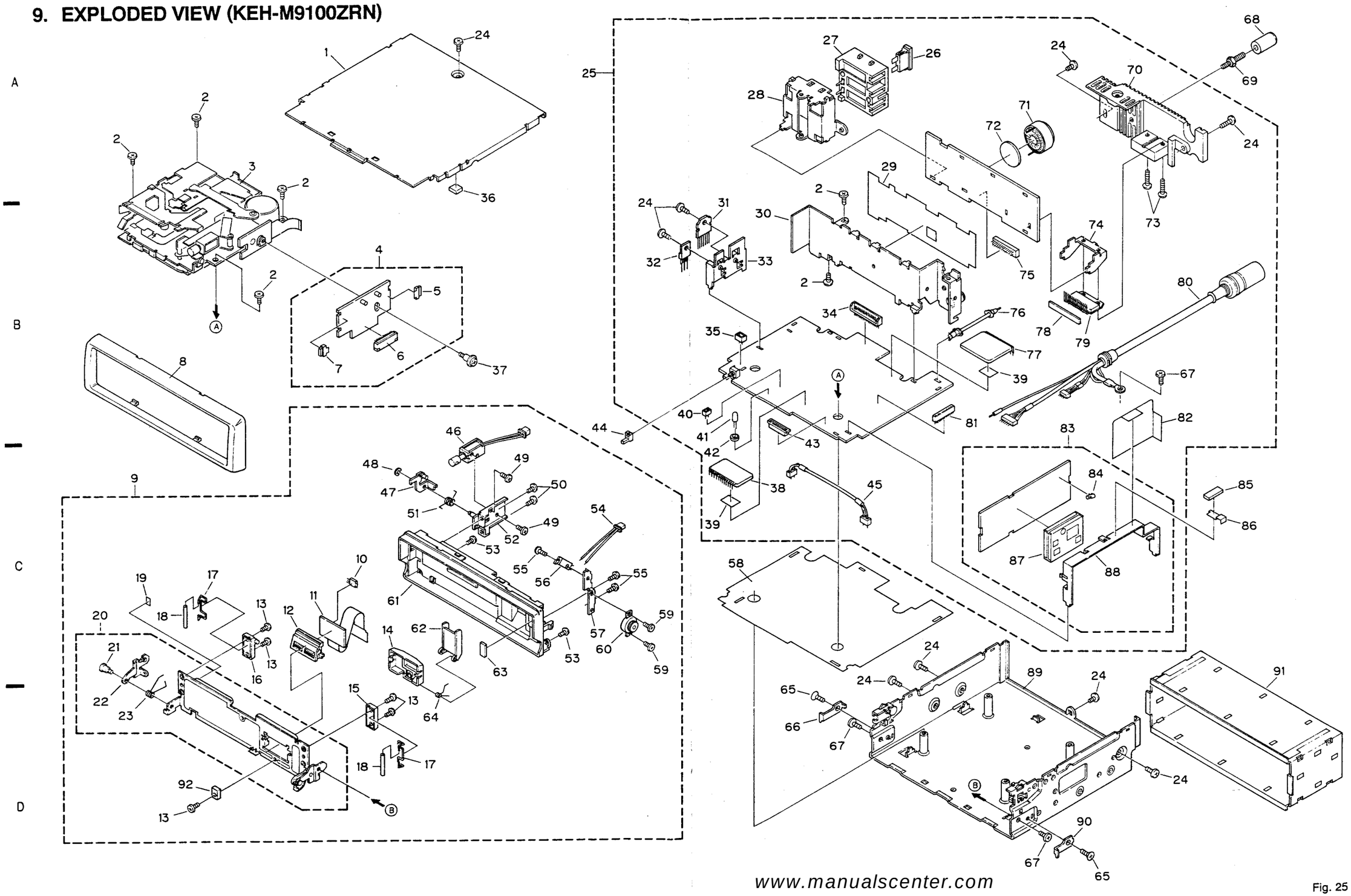

www.manualscenter.com

Fig. 25

● **Part List**

Mark	No.	Description	Part No.
	1	Case	CNB1605
	2	Screw	BMZ26P050FMC
◉	3	Cassette Mechanism Assy	EXK1450
◉	4	Deck Unit	CWM2175
	5	Connector(CN252)	CKS1773
	6	Connector(CN253)	CKS1710
	7	Connector(CN251)	CKS1771
	8	Panel	CNS2331
	9	Grille Holder Assy	CXA4685
	10	Switch(S2)	CSG1033
	11	P.C.Board	CNP2559
	12	Socket	CKS2022
	13	Screw	CBA1082
	14	Cover Unit	CXA4123
	15	Holder	CNV2655
	16	Holder	CNV2654
	17	Spring	CBH1380
	18	Roller	CLA1865
	19	Spacer	CNM3208
	20	Holder Unit	CXA5041
	21	Screw	CBA1171
*	22	Holder	CNC3516
	23	Spring	CBH1216
	24	Screw	BMZ30P060FMC
◉	25	Audio Tuner Unit	CWM2991
	26	Fuse(FU551)	CEK1136
	27	Connector	CKM1088
*	28	Holder	CNC4219
*	29	Insulator	CNM3319
	30	Holder	CXA4715
	31	IC(IC951)	TA8214K
	32	Transistor(Q953)	2SD2352
*	33	Holder	CNC3525
	34	Plug(CN709)	CKS-654
*	35	Plug(CN712)	CKS-566
*	36	Spacer	CNM3207
	37	Screw	CBA1142
	38	HIC	CWV1020
*	39	Cushion	CNM3171
*	40	Plug(CN702)	CKS-783
	41	Lamp(IL701)	CEL1208
	42	Bush	CNV-724
	43	Connector(CN713)	CKS1262
	44	Button(RESET)	CAC2761
*	45	Connector(CN503)	CDE2486
	46	Solenoid(S03)	CXP1009
	47	Arm Unit	CXA3810
	48	Washer	YE15FUC
	49	Screw	BMZ20P025FMC
	50	Screw	BPZ20P060FMC
	51	Spring	CBH1260
	52	Bracket Unit	CXA2657
	53	Screw	BMZ20P040FZK
*	54	Connector	CDE3294
	55	Screw	CBA-172
	56	Switch(S1)	CSN-078
*	57	Holder	CNC3519
*	58	Insulator	CNM3318
	59	Screw	PMZ20P040FMC
	60	Damper Unit	CXA4130
	61	Grille Unit	CXA5043
	62	Door	CNV2051
*	63	Cushion	CNM3218
	64	Spring	CBH1217
	65	Screw	CMZ30P050FMC
*	66	Holder	CNC3521
	67	Screw	BMZ30P030FMC
	68	Bush	CNV3253
	69	Screw	CBA1002
*	70	Heat Sink	CNR1240
	71	Coil	CTH1089
	72	Cushion	CNM2924
	73	Screw	BMZ30P120FMC
*	74	Holder	CNC4242
	75	Connector(CN551)	CKS-673
	76	Antenna Cable	CDH1154
	77	HIC(IC401)	CWV1024
*	78	Insulator	CNM3386
	79	IC(IC553)	PA3027A
	80	DIN Connector Cord	CDE3642

Mark	No.	Description	Part No.
	81	Plug(CN701)	CKS1729
	82	Insulator	CNM3456
	83	FM/AM Unit	CWE1242
	84	Antenna Jack	CKX1010
*	85	Spacer	CNM1429
*	86	Holder	CNC2938
	87	FM Front End	CWB1060
*	88	Holder	CNC3506
*	89	Chassis Unit	CXA4684
*	90	Holder	CNC3522
	91	Holder	CNC4348
	92	Guide	CNV2656

10. EXPLODED VIEW (CXA-M9101ZRN)

• Parts List

Mark	No.	Description	Part No.
	1	Detachable Grille Assy	CXA4686
	2	Screw	BPZ20P060FMC
*	3	Spacer	CNM3085
	4	Bush	CNV2858
	5	Lamp	CEL1208
*	6	Seal	CNM3437
*	7	Seal	CNM3436
	8	Plug(CN901)	CKS2363
	9	Connector	CNV2651
	10	LCD	CAW1123
*	11	Cover	CNC3515
◉	12	Display Unit	CWS1237
	13	Screw	BPZ20P100FZK
	14	Cover Unit	CXA4122
	15	Cushion	CNM2909
	16	Button(VOL+ -)	CAC2770
	17	Button(L)	CAC2771
	18	Button(SHIFT)	CAC2787
	19	Button(<>)	CAC2772
	20	Button(- +)	CAC2773
	21	Button(A)	CAC2774
	22	Button(B)	CAC2775
	23	Button(C)	CAC2776
	24	Button(D)	CAC2777
	25	Button(CLOCK)	CAC2778
	26	Button(OPEN)	CAC2789
	27	Button(SO)	CAC3243
	28	Button(TA)	CAC2779
	29	Button(AF)	CAC2780
	30	Grille Unit	CXA5042
	31	Button(1)	CAC2781
	32	Button(2)	CAC2782
	33	Button(3)	CAC2783
	34	Button(4)	CAC2784
	35	Button(5)	CAC2785
	36	Button(6)	CAC2786
	37	Button	CAC2788
	38	Button(RESET)	CAC2760
	39	Spring	CBH1376
	40	Lens	CNV2647
	41	Case	CNS2055

www.manualscenter.com

● **Exploded View (CXA-M9101ZRN)**

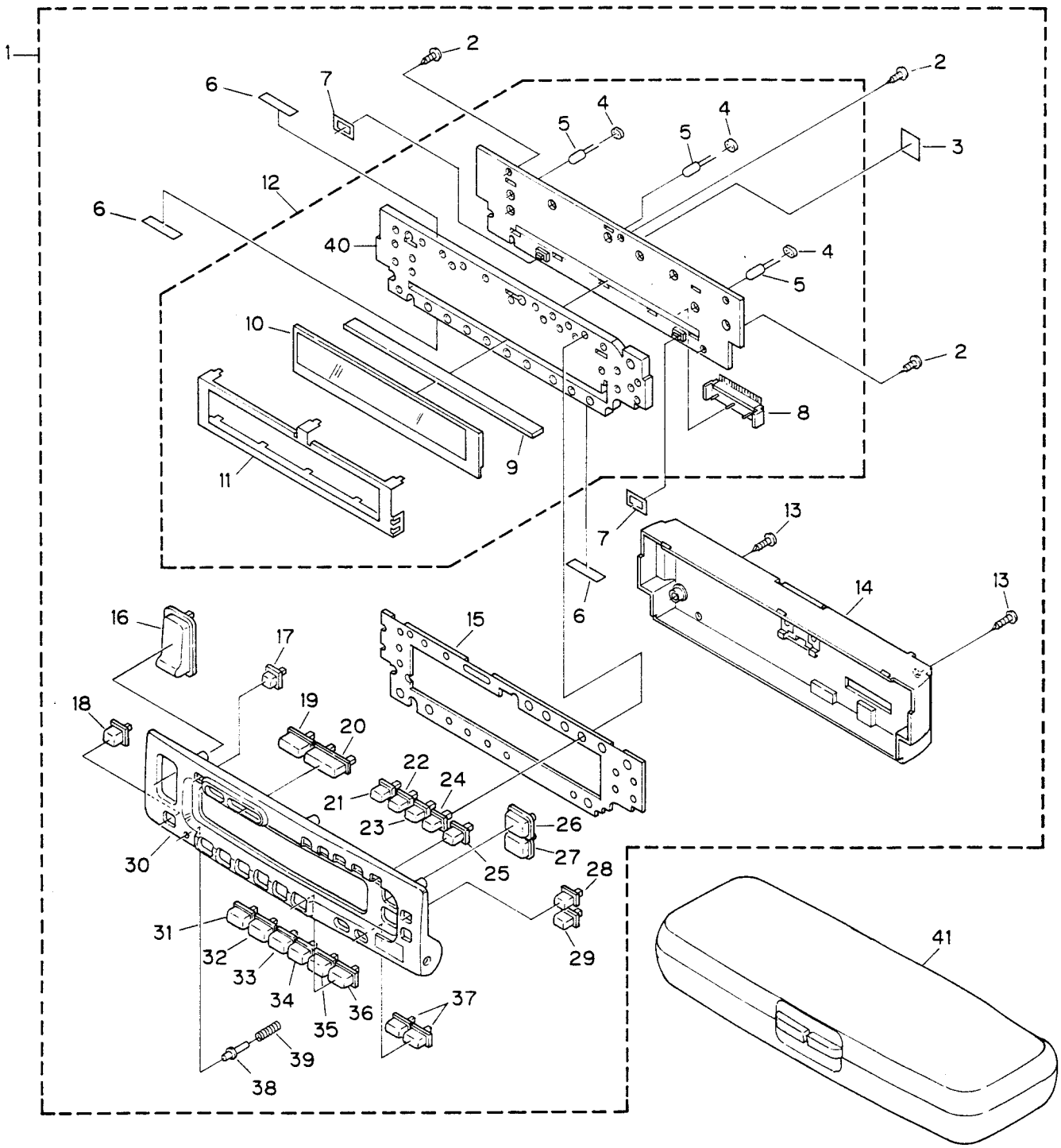

Fig. 26

www.manualscenter.com

11. ELECTRICAL PARTS LIST

NOTE:

- *Parts whose parts numbers are omitted are subject to being not supplied.*
- *The part numbers shown below indicate chip components.*

Chip Resistor

RS1/□S□□□J,RS1/□□S□□□J

Chip Capacitor (except for CQS.....)

CKS....., CCS....., CSZS.....

●KEH-M9100ZRN/EW

Unit Number : CWE1242
Unit Name : FM/AM Unit

MISCELLANEOUS

Circuit Symbol & No.	Part Name	Part No.
IC 51		PA4012B
IC 201		PA4018
Q 1 2		DTC124EU
Q 3 71 101 123		2SC4116
Q 51		DTA114TU
Q 121		IMZ1
Q 122		FMS1
Q 201		FC12(12F)
Q 203 205		DTC124EU
Q 241		2SC2712
D 51		MA143-MC
D 201 204		MA157-MR
D 205		SVC203CP
L 1 51	Inductor	LYS150K
L 2	Inductor	LPSQR22K
L 71	Inductor	LPSQ3R9K
L 101	Inductor	CTF1126
L 201	Coil	CTB1068
L 202	Coil	CTB1082
L 203	Inductor	LPSQ220K
L 204	Inductor	CTF1199
L 205	Inductor	CTF1198
L 206	Inductor	CTF1197
L 207	Inductor	CTF1115
T 51	Coil	CTE1062
T 52	Coil	CTE1063
T 71	Coil	CTE1058
T 203	Coil	CTB1076
T 204	Coil	CTE1059
T 205	Coil	CTE1060
T 206	Coil	CTE1061
TH 51 102	Thermister(DTN-T204D154K)	GGF-928
CF 52 53	Ceramic Filter	CTF1193
CF 201	Ceramic Filter	CTF1192
CF 202	Ceramic Filter	CTF1191
X 151	Ceramic Resonator	CSS1055
X 201	Crystal Resonator	CSS1014
VR 1	Semi-fixed 2.2kΩ(B)	CCP1015
VR 51 101 102	Semi-fixed 33kΩ(B)	CCP1022
SP 1		DSP-201M
	FM Front End	CWB1064

RESISTORS

Circuit Symbol & No.	Part Name	Part No.
R 1 202		RS1/10S681J
R 2		RS1/16S101J
R 3		RS1/16S333J
R 4 75 107		RS1/16S102J
R 5 6 54		RS1/16S472J
R 7		RS1/16S560J
R 8		RS1/16S0R0J
R 9		RS1/16S0R0J
R 56		RS1/16S822J
R 57		RS1/16S472J
R 58		RS1/16S563J
R 59		RS1/16S331J
R 60		RS1/16S473J
R 61 105		RS1/16S332J
R 64 151 152		RS1/16S222J
R 65		RS1/16S273J
R 66		RS1/16S103J
R 72		RS1/16S123J
R 73 124 126		RS1/16S103J
R 74		RS1/16S331J
R 76		RS1/16S221J
R 101		RS1/10S331J
R 102		RS1/16S472J
R 106 128		RS1/16S683J
R 108 122		RS1/16S104J
R 111		RS1/10S123J
R 112		RS1/16S684J
R 121		RS1/10S683J
R 123		RS1/16S683J
R 125		RS1/16S154J
R 127		RS1/16S683J
R 129		RS1/16S473J
R 153		RS1/16S222J
R 201		RS1/16S220J
R 203 206		RS1/16S222J
R 204 213		RS1/16S473J
R 205 209		RS1/16S470J
R 207		RS1/16S822J
R 208 212		RS1/10S103J
R 210		RS1/10S682J
R 211 241 242		RS1/16S103J
R 214		RS1/16S182J
R 243		RS1/10S181J
R 244		RS1/16S561J

CAPACITORS

Circuit Symbol & No.	Part Name	Part No.
C 1 111		CEV100M16
C 2 51 59 74		CKSRYF473Z25
C 3		CCSRCH270J50
C 4 55		CKSRYB102K50
C 5		CKSRYB472K50
C 52 53 61		CKSRYB223K25
C 54		CCSRSL101J50
C 56		CKSRYF104Z25
C 57		CSZSR22M35
C 58		CCSRCH060D50
C 60		CEVNP100M25
C 72 73 241		CKSRYB103K25
C 75		CKSRYF103Z50
C 101		CKSRYB822K25
C 102		CKSRYB682K25

======Circuit Symbol & No. Part Name======	Part No.
C 103	CKSRYB272K50
C 105	CSZS2R2M10
C 106	CEVR47M50
C 107 108	CKSRYB222K50
C 110	CEVR22M50
C 112	CKSYB104K25
C 121	CEV4R7M35
C 122	CKSRYB471K50
C 123	CSZS0R1M35
C 151 152	CKSRYB273K16
C 153	CSZSR47M20
C 154 155	CEV3R3M50
C 156	CSZS3R3M10
C 157	CEV101M10
C 158	CKSRYF473Z25
C 201	CKSRYB103K25
C 202 212	CKSRYB332K50
C 203 215 219	CKSRYF473Z25
C 204 208	CKSRYB223K25
C 205	CCSRCH220J50
C 206 207	CCSRCH820J50
C 210	CKSQYF223Z25
C 211	CEV2R2M50
C 213	CCSRCH330J50
C 216	CKSQYF473Z25
C 218	CEVNP2R2M35
C 220	CCSRCH430J50
C 221 231	CCSRCH100D50
C 222	CSZS010M16
C 223	CKSRYF333Z25
C 224 229	CEV470M16
C 225	CKSQYF333Z25
C 226	CKSQYF473Z25
C 227	CEV4R7M35
C 228	CKSQYB103K50
C 230	CEV220M6R3
C 232	CKSRYB102K50
C 240	CKSRYF473Z25
C 242	CEV100M16

Unit Number :
Unit Name : Deck Unit

MISCELLANEOUS

IC 251	BA3430FS
IC 301	HA12134FP
Q 251	2SC4116
Q 281	2SC4116
Q 282 284 286	2SB1441JU
Q 283 285	2SC3295
Q 301	DTC143EK
VR 301 302 Semi-fixed 33kΩ(B)	CCP1076

RESISTORS

R 251 252 253 254	RS1/10S104J
R 255 256 401	RS1/10S181J
R 257 258	RS1/10S334J
R 259 260	RS1/10S133J
R 261 262	RS1/10S183J
R 263	RS1/10S473J
R 264	RS1/10S333J
R 265 266	RS1/10S224J
R 281	RS1/10S472J
R 282 288 293	RS1/10S473J
R 283 284 285 289 290 294 295	RS1/8S221J
R 286 291 296	RS1/10S103J
R 287 292	RS1/10S103J
R 305	RS1/10S183J
R 306 308	RS1/10S223J

======Circuit Symbol & No. Part Name======	Part No.
R 402	RS1/10S270J
R 403	RS1/10S823J

CAPACITORS

C 251 252 253 254	CKSQYB561K50
C 255 256	CEV220M6R3
C 257 258	CKSQYB103K50
C 259 260 313	CEV010M50
C 261	CEV101M6R3
C 262	CKSYB103K50
C 281 282	CEV4R7M35
C 301 302	CEVR47M50
C 303 304	CKSYB224K25
C 314	CKSYB103K50
C 401	CKSQYB152K50
C 402 404	CKSYB104K25
C 403	CEV6R8M25

Audio Tuner Unit
Consists of
●Mother P.C. Board
●Power Amp P.C. Board

UnitNumber :
UnitName :Audio Tuner Unit

MISCELLANEOUS

IC 401	CWV1024
IC 402	UPC4570G
IC 551	PD4402A
IC 553	PA3027A
IC 701 (SC17005GF-599)	GGF9006
IC 702	LH5116HN-10T
IC 703	TC74HC125AF
IC 704	PD4410A
IC 706	S-80734AN-DY
IC 801	CWV1020
IC 951	TA8214K
Q 351 352 353 354 355 356 361 362 551	DTC343TK
Q 358 571 708 955	DTC114EK
Q 359	IMX3
Q 360	FMC2
Q 501 503 712 715 803	2SC2412K
Q 502	2SK208
Q 504	2SK208
Q 505 957	2SA1298
Q 506	2SC3098
Q 507 702 706 720 805 806	2SC2412K
Q 508 704 801 807	DTC124EK
Q 509	2SC3295
Q 510 711	DTC124EK
Q 552 701 716 717	DTA124EK
Q 703	2SB1360
Q 705 714	DTC114EK
Q 707	FMC3
Q 709 952 958	2SC3295
Q 710	2SA1298
Q 728	DTA114EK
Q 730	FMW1
Q 802	2SJ163
Q 804 954	2SA1162
Q 808	DTC314TK
Q 809	FMC2
Q 951	2SB772
Q 953	2SD2352
Q 956	2SA1162
D 351	IMN11

www.manualscenter.com

======Circuit Symbol & No.	Part Name======	Part No.
D 401 402		MA8043H
D 403 404 737 739 740 746		MA110
D 501 502		MA8027H
D 551 552 563 564		MA151A-MA
D 554		SIB01-01
D 555 556 557 558 559 560 561 562 720 953		ERA15-02
D 701		DAN202K-N
D 702		DAP202K-P
D 718 733		MA8075M
D 719		MA8082L
D 721		DAN202K-N
D 722		MA151WK-MT
D 952		MA8056H
L 502	Inductor	LCTA470K4532
L 552	Coil	CTH1089
L 553	Inductor	LCTB2R2K2125
L 701 704	Inductor	LCTB2R2K2125
L 702 706	Inductor	LCTA101K3225
L 703	Inductor	LCTA101K4532
TC 701	Trimmer	CCG1002
IB 701		CWW1330
IB 702		CWW1331
IB 703		CWW1332
IB 704		CWW1319
X 551	Crystal Resonator	CSS1029
X 701	Crystal Resonator	CSS1011
X 702	Crystal Resonator	CSS1023
X 703		CPV1011
S 701	Switch(RESET)	CSG1012
IL 701	Lamp 14V 40mA	CEL1208
VR 801	Volume 150kΩ(B)	VRTB6VS224
FU 551	Fuse 10A	CEK1136
FU 701		ICP-N50
	FM/AM Unit	CWE1242

RESISTORS

======Circuit Symbol & No.	Part Name======	Part No.
R 351 352 701 706 722 732 814 953 958 959		RS1/10S102J
R 353 354 513		RS1/10S821J
R 355 356 807		RS1/10S563J
R 357 358 363 364 371 372 405 406 703 727		RS1/10S473J
R 359 360 374 504 505 508 520		RS1/10S102J
R 361 362 509 511 512 590 774		RS1/10S102J
R 365 366 401 402 518 521 710 731		RS1/10S222J
R 367 368		RS1/10S183J
R 369 370 575		RS1/10S393J
R 373 375 407 408 409 726 747 772 812 815		RS1/10S223J
R 377 378		RS1/10S681J
R 501 523 768 771 773		RS1/10S103J
R 502 519 736		RS1/10S472J
R 503		RS1/10S152J
R 506 507 804		RS1/10S222J
R 510 554 713 757		RS1/10S104J
R 514		RS1/10S182J
R 515		RS1/10S101J
R 516		RS1/10S101J
R 517		RS1/10S331J
R 522 718 720 746 963		RS1/10S223J
R 524 960		RS1/10S221J
R 551 552 555 576		RS1/10S103J
R 553 577 578 579 580 581 582 744 745		RS1/10S471J
R 556 558 559 562		RS1/10S332J
R 564 584 585 586 780 796		RS1/10S473J
R 566 567 568 569 570 571 572 573		RS1/8S2R2J
R 574		RS1/10S155J
R 583		RS1/2S102J
R 591 728 738 751 759 787 789 954 956		RS1/10S103J
R 645		RS1/10S0R0J
R 702 711 712 742 781 782 783 784 785 792		RS1/10S681J
R 704 769		RS1S221J
R 705 708 717 733 775 776 952		RS1/10S472J
R 707 799		RS1/10S681J
R 709		RS1/10S563J
R 714 719 721 761 762 765 788 790 798 805		RS1/10S473J
R 715		RS1/10S010K
R 723		RS1/10S124J
R 724		RS1/10S683J
R 725 778 779		RS1/10S682J
R 729 730		RA3C103J
R 735		RS1/10S474J
R 737 750 752 753 756 758 763 764 766 770		RS1/10S473J
R 739 740 741 961		RS1/10S473J
R 754		RS1/10S823J
R 755 810 811		RS1/10S334J
R 777 786		RS1/10S682J
R 801		RS1/10S100J
R 802 951 962		RS1/10S222J
R 806		RS1/10S474J
R 808 809		RS1/10S272J
R 955		RS1/2S471J
R 957		RS1/10S393J

CAPACITORS

======Circuit Symbol & No.	Part Name======	Part No.
C 351 352		CEAR33M50LS2
C 353 354 357 358 711		CEA2R2M50LS2
C 355 356		CEA010M50LS2
C 359 360 404 405 406 407 408 409 724 801		CEA100M16LS2
C 361 362 555 955 956		CEA4R7M35LS
C 401 402 710 804		CEA470M6R3LS
C 403		CEA470M10LS
C 501 721		CKSQYB473K25
C 502	4.7μF/16V	CCH1005
C 503 524 526 727		CKSQYB103K50
C 504 506 507 553 561 562 713 715 726 954		CKSQYB473K25
C 505		CEAR47M50LS2
C 508		CFTNA474J50
C 509 523 525 527 703 728 807 808		CKSQYB103K50
C 510		CCSQSL681J50
C 511		CCSQSL101J50
C 512		CCSQSL101J50
C 551		CEA100M16LS2
C 552 554 566 567 568 569 570 571 572 573		CKSQYF104Z25
C 556 557 558 560		CKSQYB222K50
C 564 565	3300μF/16V	CCH1125
C 574 575 712 716		CCSQCH330J50
C 576		CKSYF105Z25
C 577 702		CKSQYB223K25
C 578 579 580 581 582 583 705 708 709 723		CKSQYB102K50
C 701 725 803		CEA101M10LS
C 704 714 952 953 959		CEA220M16LS
C 706 707		CCSQCH100D50
C 717		CKSQYF104Z25
C 722		CEA101M16L2
C 732		CEA1R5M50LS2
C 747		CEA220M10LS
C 802		CKSQYB223K25
C 805		CEAR22M50LS2
C 809		CKSQYB102K50
C 951		CEA222M16L2
C 957		CEA331M10L2
C 958		CEALNPR47M50

Unit Number :
Unit Name : Connector P.C.Board

======Circuit Symbol & No.	Part Name======	Part No.
D 1 2		F1SR35-100A
S 1 2 3	Switch(LOAD,END,F/R)	CSN1005

Unit Number :
Unit Name : Switch P.C.Board

S 1	Switch(METAL)	ESN1006
S 2	Switch(PLAY)	CSN1005

MiscellaneousParts List

HD 1	Head Unit	EXA1137
M 1	Motor Unit	EXA1089
SO 1	Solenoid	EXP1009
SO 2	Solenoid	EXP1004
SO 3	Solenoid	CXP1009
S 1	Switch(CSENS)	CSN-078
S 2	Switch(EJECT)	CSG1033

●CXA-M9101ZRN/EW

Unit Number :
Unit Name : Display Unit

MISCELLANEOUS

IC 901		PD4285
IC 902 903		LC7582A
IC 904		S-80740AH-B4
IC 905		BX-1393
Q 901		2SC4116
Q 902		DTC124TU
Q 905		2SB1132
D 901 902 903 904 905		MA143-MC
D 912		MA728-2A
L 901	Inductor	LCTA101K3225
X 901		CSS1069
S 901 902 903 904 907 908 909 910 911 926		CSG1043
S 912 913 914 915 916 917 918 919 920 921		CSG1043
S 922 923 924 925	Switch	CSG1043
IL 906 907 909	Lamp 14V40mA	CEL1208
IL 913 914 915	Lamp 5V75mA	CEL1206
	LCD	CAW1123

RESISTORS

R 901 902 903 904 905 907	RS1/10S471J
R 906 911 916	RS1/10S103J
R 908	RA2CQ471J
R 910	RA3CQ471J
R 913 918	RS1/10S470J
R 914 924	RS1/10S223J
R 915 923	RS1/10S104J
R 917 919 920	RA3C103J
R 921 926	RS1/10S473J
R 922	RS1/10S333J
R 927	RS1/10S472J
R 931	RS1/10S222J

CAPACITORS

C 901 902 903 904 905	CKSQYB152K50
C 906	CKSQYB103K50
C 907 911 916	CKSQYF103Z50
C 908 909	CCSQSL221J50
C 910	CSZSC220M6R3
C 912 915	CCSQSL331J50
C 913	CSZS4R7M6R3
C 914	CKSQYF223Z50

www.manualscenter.com

PIONEER®
The future of sound and vision.

Service Manual

ORDER NO.
CRT1276

CASSETTE MECHANISM ASSEMBLY

CX-175

NOTE

- **This service manual describes operation of the cassette mechanism incorporated in models listed in the table below.**
- **When performing repairs use this manual together with the specific manual for the model under repair.**

Model	Service Manual	Cassette Mechanism Assembly
KEH-M5000SDK/WG KEH-M5000B/EW KEH-M5000QR/ES	CRT1236	EXK1410
KEH-M5001B/XIB	CRT1238	EXK1410
KEH-M5000QR/UC	CRT1272	EXK1410
KEH-8100SDK/WG KEH-8100B/EW KEH-8101B/XIB KEH-8150QR/ES KEH-8100QR/US	CRT1264	EXK1410
KEH-5000ZRN/XIB	CRT1286	EXK1410
KEH-M7000SDK/WG KEH-M7000B/EW	CRT1235	EXK1420
KEH-M7000QR/UC	CRT1237	EXK1420

Model	Service Manual	Cassette Mechanism Assembly
KEH-M7001B/XIB	CRT1238	EXK1420
KEH-M7000QR/CA	CRT1244	EXK1420
KEH-700QR/US KEH-8150QR/CA	CRT1264	EXK1420
KEX-M800SDK/WG KEX-M800/EW, ES, UC	CRT1234	EXK1430
KEX-M801/XIB	CRT1238	EXK1430

PIONEER ELECTRONIC CORPORATION 4-1, Meguro 1-Chome, Meguro-ku, Tokyo 153, Japan
PIONEER ELECTRONICS SERVICE INC. P.O. Box 1760, Long Beach, California 90801 U.S.A.
PIONEER ELECTRONICS OF CANADA, INC. 505 Cochrane Drive, Markham, Ontario L3R 8E3 Canada
PIONEER ELECTRONIC [EUROPE] N.V. Keetberglaan 1, 2740 Beveren, Belgium
PIONEER ELECTRONICS AUSTRALIA PTY. LTD. 178-184 Boundary Road, Braeside, Victoria 3195, Australia TEL: [03] 580-9911
© PIONEER ELECTRONIC CORPORATION 1990
FT MAR. 1990 Printed in Japan

www.manualscenter.com

1. DISASSEMBLY

Note: Always use new washer and E washer at the time of reassembling.

• Dismounting the Cassette Holder

1. Remove the three springs.
2. Take off E washer, and then remove the arm unit.
3. Make the claw straight.
4. Shift the cassette holder toward the left and pull it out from above.

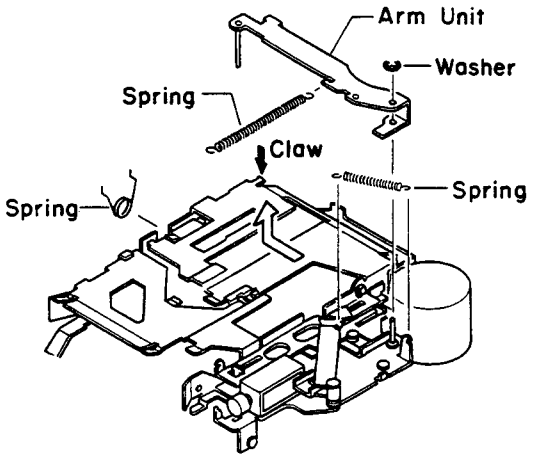

Fig. 1

• Dismounting the Head Unit

1. Remove the two screws, and then remove the guide assy.
2. Remove the two screws, and then remove the head unit.

• Dismounting the Pinch Roller Unit

1. Remove the spring and then remove the pinch roller unit

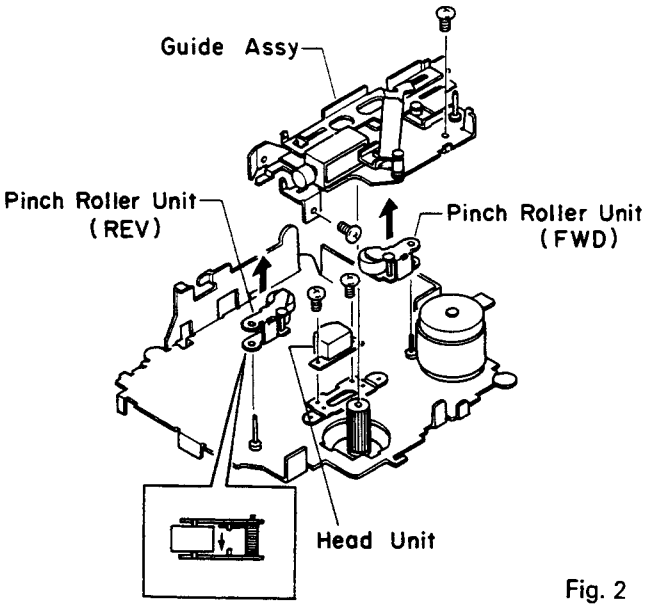

Fig. 2

• Dismounting the Gear (Reel Base)

1. Remove the two screws, and then remove the cover.
2. Remove the collar, and then remove the spring and gear. When removing the collar be careful not to damage the claw on the inside of the collar.

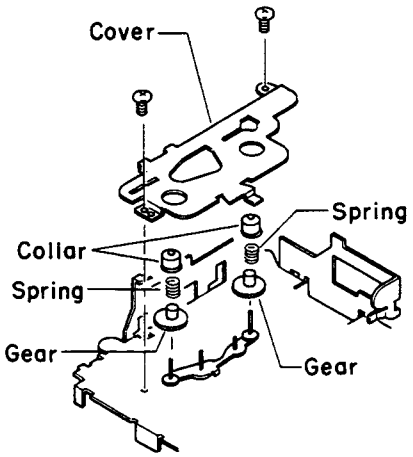

Fig. 3

• **Dismounting the Flywheels**

1. Remove the two screws, and then remove the cover.
2. Take off E washer. Retain washer properly to ensure it doesn't get lost.
3. Remove the flywheels. Do not mistake the N and R flywheels.

• **Dismounting the Motor Unit**

1. Remove the two screw, and then remove motor unit.

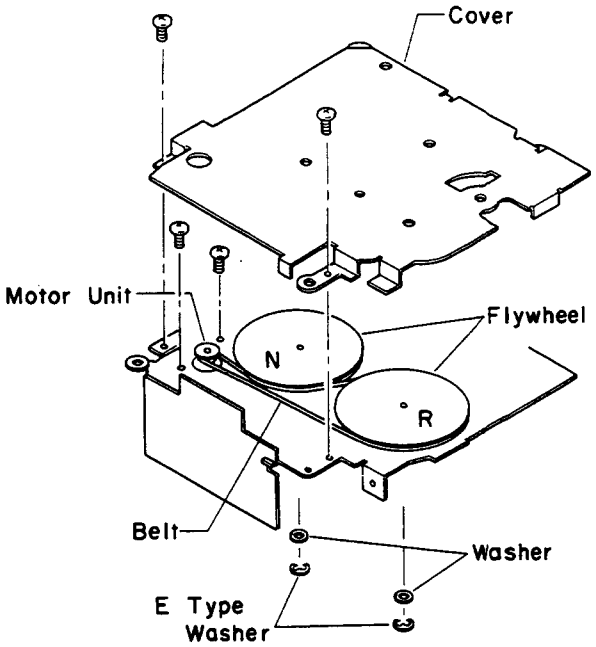

Fig. 4

2. ADJUSTMENT

2.1 AZIMUTH ADJUSTMENT

• **To Adjust**

1. Play "A" side of NCT-110 (10 kHz, −10 dB). Adjust each screw for maximum output in forward and reverse directions.
2. Play "B" side in forward and reverse directions to confirm adjustment.

2.2 TAPE SPEED ADJUSTMENT

• **To Adjust**

1. Reproduce NCT-111 (3 kHz, −10 dB). Adjust the semifixed resistor so that frequency counter shows 3,010 Hz (+80 Hz, −40 Hz).

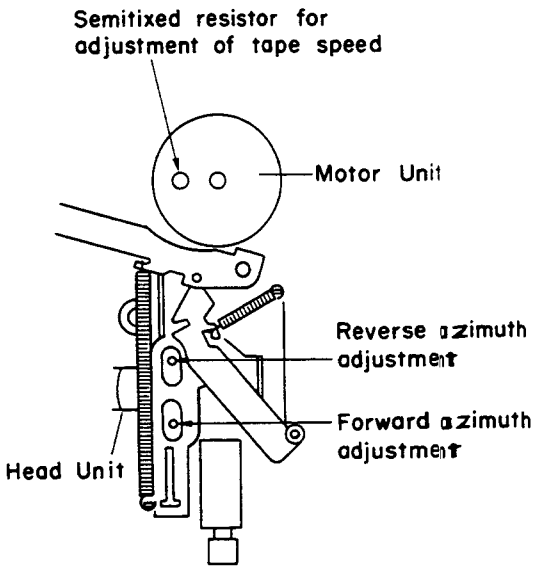

Fig. 5

www.manualscenter.com

2.3 CHECK POINTS OF CASSETTE MECHANISM

Confirm the following items when replacing parts of the cassette mechanism.	■ Tape speed deviation: $3{,}000^{+90}_{-30}$ Hz (4.76cm/s $^{+3}_{-1}$ %) Using an NCT-111, measure the speed at the start and end of winding and take the maximum value. If values indicated by the pointer vary considerably, adjust to 70% of the minimun and maximum values. Measuring time shall be 5 – 6 seconds.	■ Wow and flutter: Less than 0.18% (WRMS) Using an NCT-111, measure the wow and flutter at the start and end of winding and take the maximum value. If values indicated by the pointer vary considerably, adjust to 70% of the minimum and maximum values. Measuring time shall be 5 – 6 seconds.
■ Fast forward and rewinding time: 95–115 seconds Using a C-60, set to fast forward and rewind, and measure the time with a stop watch.	■ Winding torque: 37–63g • cm Using a cassette type torque meter (100 g•cm), measure the minimum value while in the play mode. Measuring time shall be 2.5 – 6 seconds.	■ F.F. torque: 70–110g • cm Using a cassette type torque meter (120 g•cm), measure the value when the tape stops in the F.F. mode.
■ REW torque: 70–110g • cm Using a cassette type torque meter (120 g•cm), measure the value when the tape stops in the REW mode.	■ Back tension torque: 0.5–5 kg After setting in the REW mode without loading a cassette tape for 5 minutes, measure the back tension torque in the play mode, using a cassette type torque meter.	■ Cassette loading force: Less than 0.5 kg Push the center of the cassette and measure the force with a tension meter (3 kg).

3. MECHANISM DESCRIPTION

- **Parts Location**

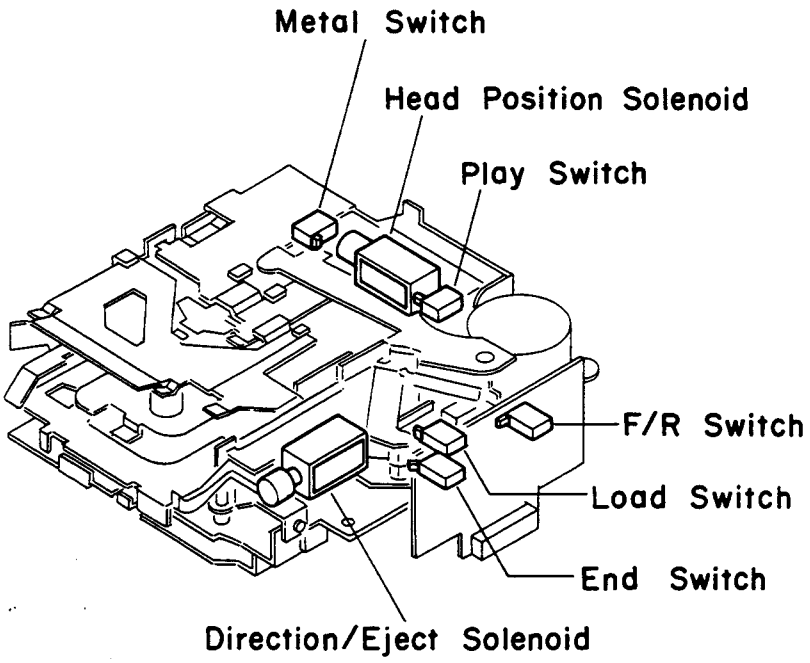

Fig. 6

- **Switch Mode**

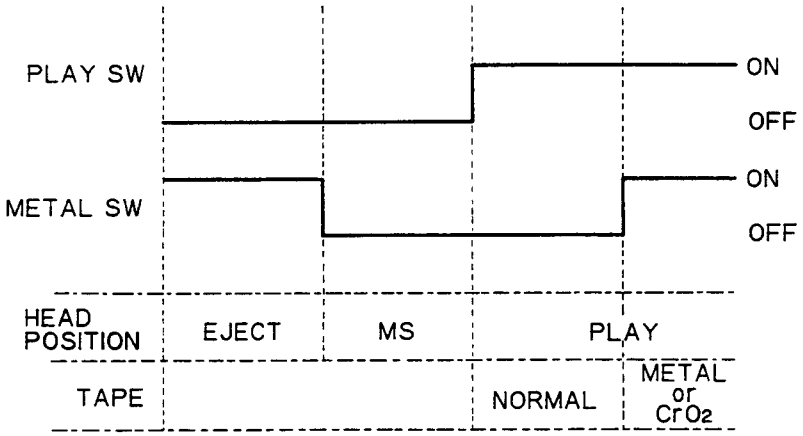

Fig. 7

www.manualscenter.com

- **ATSC Operation**

(1) Loading of a tape cassette causes an arm unit to turn, which causes the load switch to turn ON. With the load switch ON, a motor runs to cause all gears other than FF/REW idler gears to mesh and forward and reverse idler gears rotate in the respective play direction. Now the ATSC state is obtained (Figs. 8 and 9).

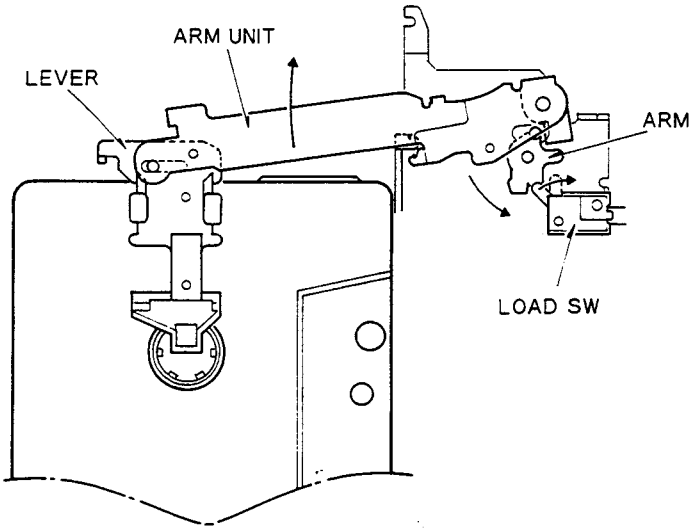

Fig. 8

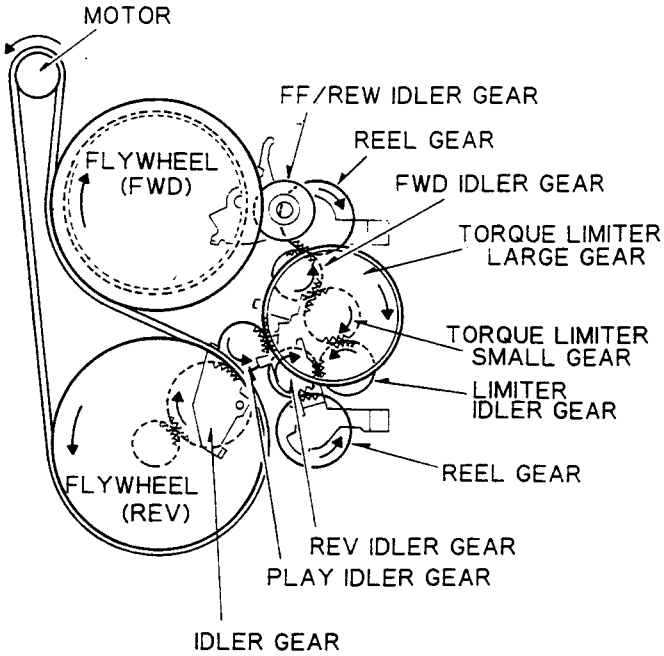

Fig. 9

- **Sensing Operation**

(1) Sensing arm (felt) and torque limiter bush are held together by means of a sensing arm spring.
The felt slides with the torque limiter bush side to keep Point A as a fulcrum at all times while the sensing arm moves along a cam of sensing cam gear because the arm tries to turn counterclockwise. (Fig. 10)

(2) the torque limiter bush stops rotation at ATSC or tape end, and a pin of sensing arm is pushed toward the outermost side by the sensing cam gear.
Frictional force between the felt and bush helps the sensing arm holding its position. (Fig. 11)

(3) When the sensing cam gear is turned further, with the sensing arm held in a state shown in Fig. 11, the sensing arm pin is caught by a hook of the cam gear. (Fig. 12)

(4) The sensing cam gear turns further from the state shown in Fig. 12, and the sensing arm moves to turn ON the sensing switch. (Fig. 13)

(5) With the sensing switch ON, the sensing cam gear turns further to release the sensing arm pin from the hook.
The pin returns to an original position under a force of the sensing arm spring. (Fig. 14)

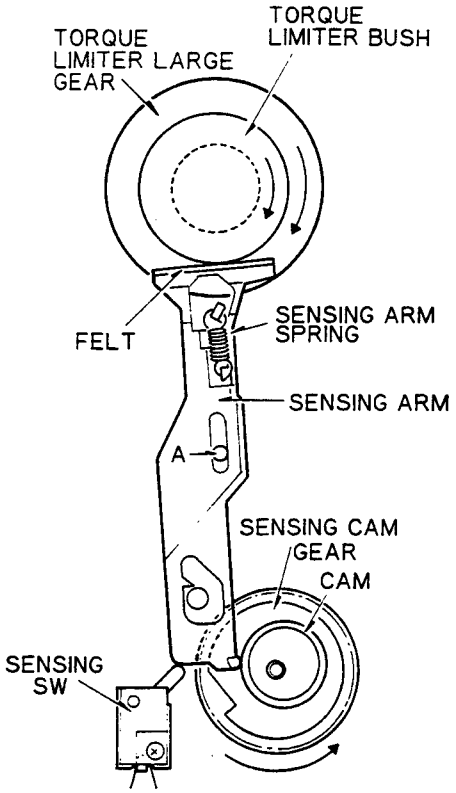

Fig. 10

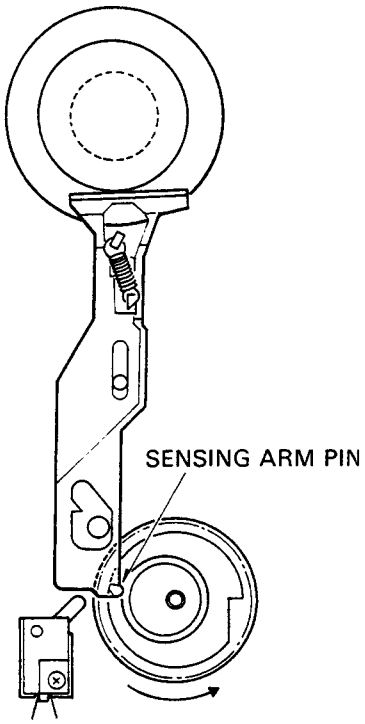

Fig. 11

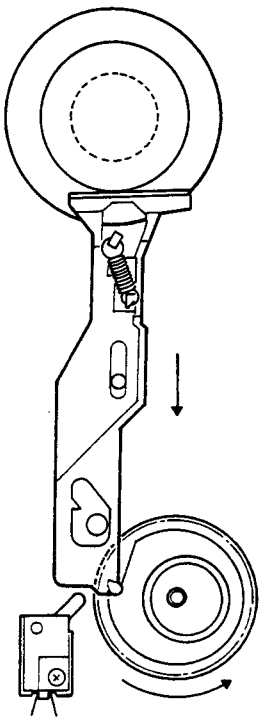

Fig. 12

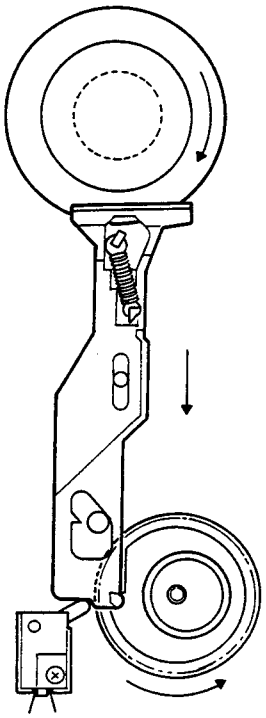

Fig. 13

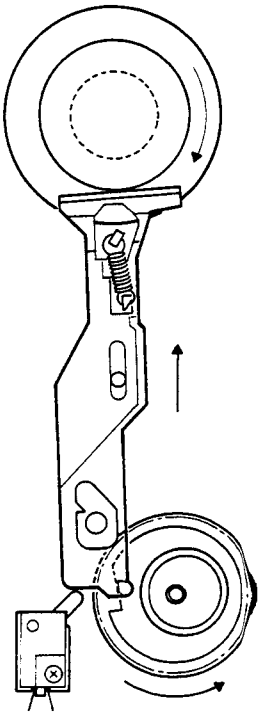

Fig. 14

www.manualscenter.com

- **Heading Operation**

(1) A heading solenoid performs attraction in the A direction, causing a lock arm to turn clockwise via L arm, solenoid lever, and arm (A). The cam gear is unlocked. Notch of the cam gear meshes with the second-stage gear for counter-clockwise rotation.
The arm (B) is driven clockwise to begin heading operation. In this heading operation, the arm (B) turns clockwise to cause a lever to move in the B direction.
A head base, which is connected with the lever via spring, operates simultaneously with spring. (Fig. 15)

(2) Fig. 16 shows the state at end of heading operation.
The cam gear rotates to a full limit and the lock arm locks the cam gear. This locking is made to prevent the head base to move backward due to entry of the play lock arm while heading operation is under way.

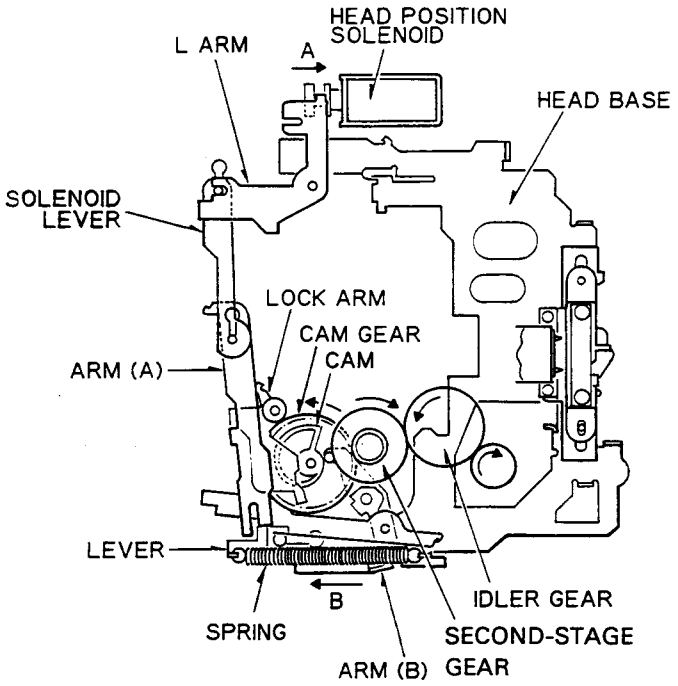

Fig. 15

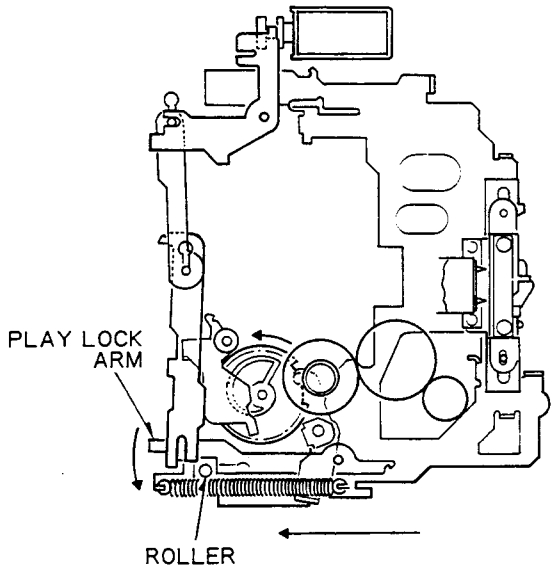

Fig. 16

- **Playing Operation**

(1) FWD play is obtained when the REV idler gear is released from the limiter idler gear. (Fig. 17)
REV play is obtained when the FWD idler gear is released from the torque limiter small gear. (Fig. 18)

FWD PLAY

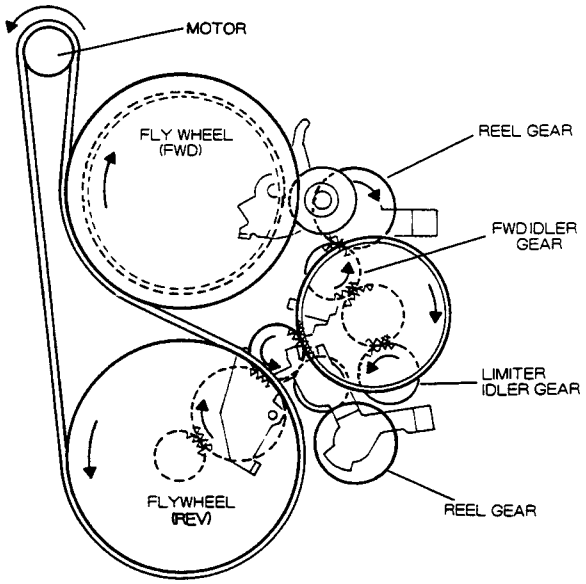

Fig. 17

REV PLAY

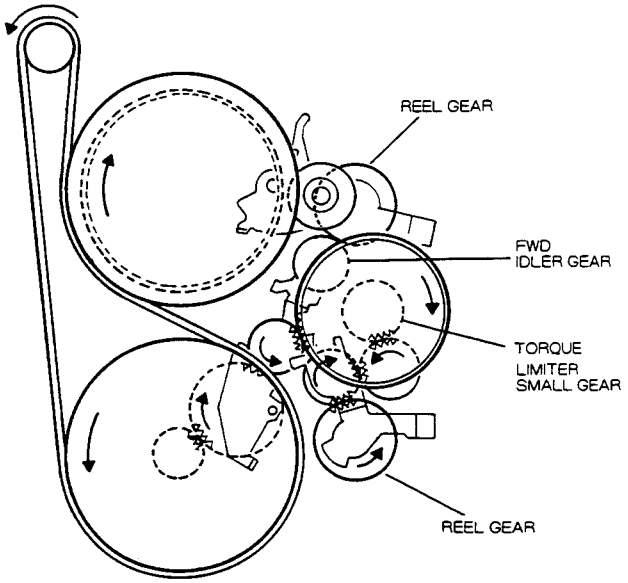

Fig. 18

www.manualscenter.com

- **Direction Change**

(1) To change the tape running direction, pull the DIR (EJ) solenoid in the A direction to press the lock arm via solenoid arm to unlock the F/R gear.
Notch meshes to cause counterclockwise rotation to move the F/R lever to the right.
The F/R lever moves the F/R slide lever and F/R arm.
The F/R slide lever performs pinch roller changeover by cam and F/R switch changeover (FWD→ON, REV→OFF).

The F/R arm moves FWD and REV idler plates via the F/R control lever in order to achieve changeover between FWD and REV idler gears.
Note that the F/R arm is connected with a head base, and the roller performs FWD and REV idler gears changeover because it is in the B section of F/R arm when the head is at PLAY or MS.
As the roller is in the C section of the F/R arm when the head is at the release (EJ) position, no changeover is made. In this state, both idler gears of FWD and REV mesh with each other. (Figs. 19 and 20)

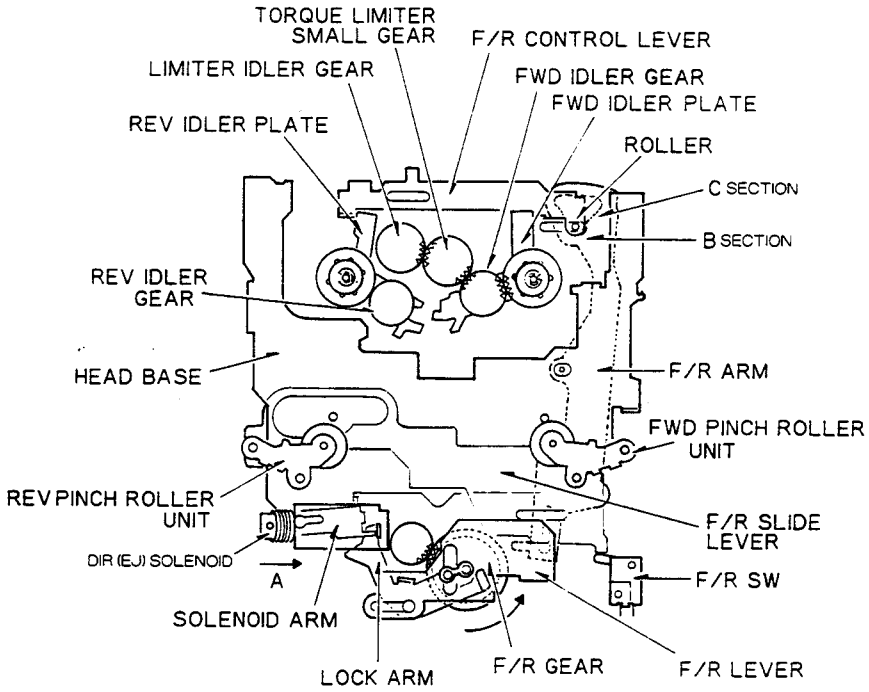

Fig. 19

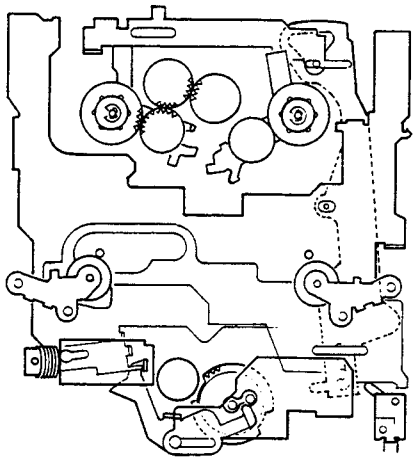

Fig. 20

- **Head Position**

(1) Fig. 21 shows the play state. The heading solenoid is moved in the A direction from the play state to release the play lock arm via L arm, solenoid lever and arm (A).
The head base moves backward until locked with an MS lock arm under a force of return spring and enters the MS state.

· PLAY

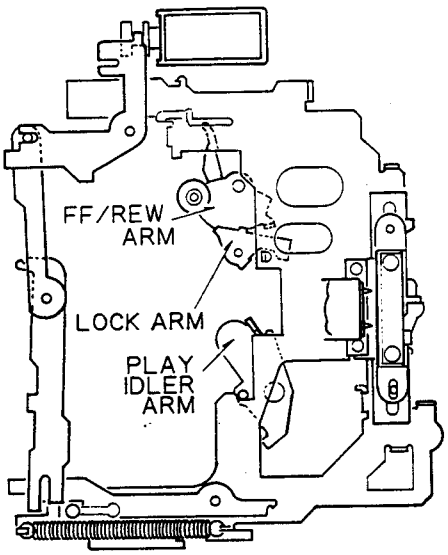

Fig. 21

(2) The heading solenoid is moved in the A direction from the MS state to release the MS lock arm via L arm, solenoid lever, and arm (A).
The head base returns to the release position under a force of return spring.
The head base pushes back the FF/REW arm during return, releasing the FF/REW idler gear from the torque limiter.
The play idler arm is rotated counterclockwise by a cam of the head base to mesh the play idler gear with the torque limiter. (Fig. 23)

The head base rotates the lock arm at a head base bend section during return, thereby unlocking the FF/REW arm.
The FF/REW arm turns counterclockwise and stops at a specified position, allowing the FF/REW idler gear to mesh with flywheel and torque limiter.
The play idler arm turns clockwise to release the play idler gear from the torque limiter. (Fig. 22)

· MS (FF/REW)

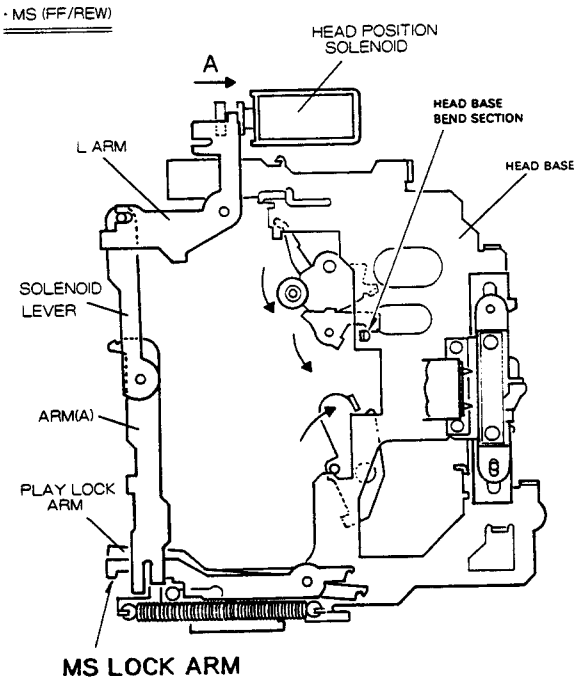

Fig. 22

· RELEASE (EJ)

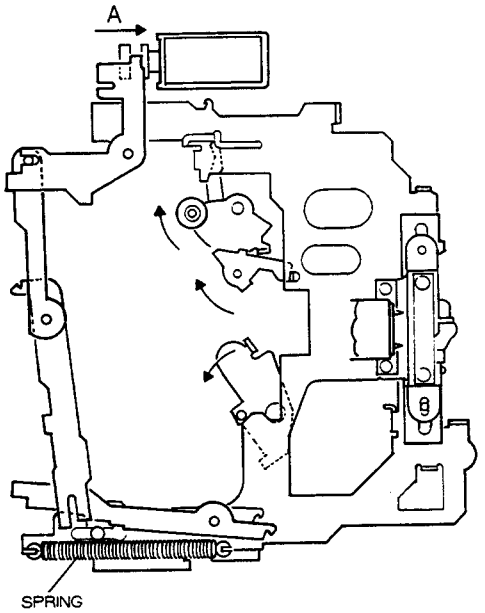

Fig. 23

www.manualscenter.com

- **FF/REW Operation**

(1) The play idler gear is released from the torque limiter large gear, and the FF/REW idler gear meshes.
When the REV idler gear is released, the FF state is obtained. The REW state is obtained when the FWD idler gear is released. (The state is opposite between FWD (PLAY) and REV (Reverse) in both cases.)

There are two (upper and lower) torque limiter large gears. Both two FF/REW idler gears mesh simultaneously during FF/REW to generate large torque. (Only one gear meshes during play.) (Figs. 24 and 25)

FF

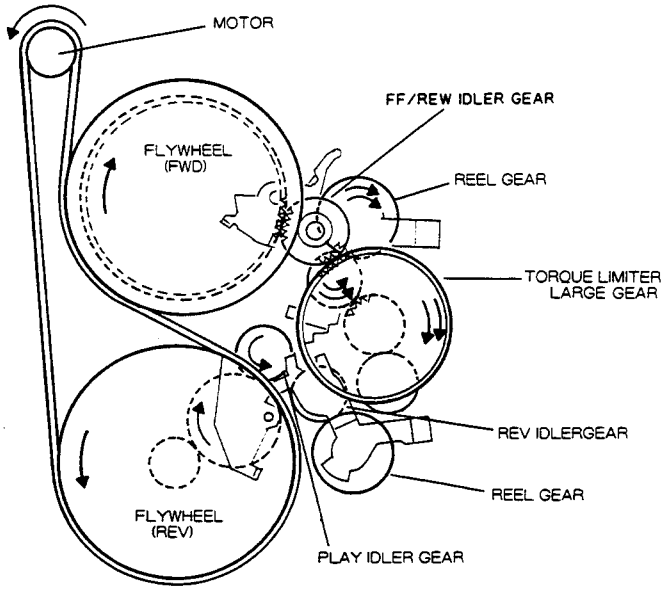

Fig. 24

REW

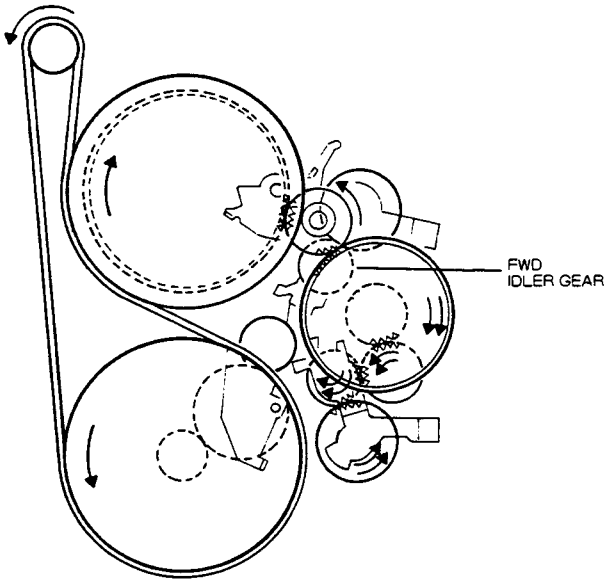

Fig. 25

- **Eject Operation**

(1) The EJ (DIR) solenoid performs attraction to operate the lock arm via solenoid arm, unlocking gear.
The gear then rotates counterclockwise to contact the lever (B) which is moved to the right.
The lever (A) is connected with the lever (B) via spring, and moves simultaneously to the right. A cam of the lever (A) pushes up a cassette arm and the lever (C) enters below a cassette arm roller to maintain the push-up height. (Fig. 26 ~ 28)

(2) Upon completion of push-up of a tape cassette, the gear (B) pushes the lever (D) by roller to move it to the left. The lever (D) is connected with an arm unit via spring (D) and pushed out the tape cassette. (Figs. 29 and 30)

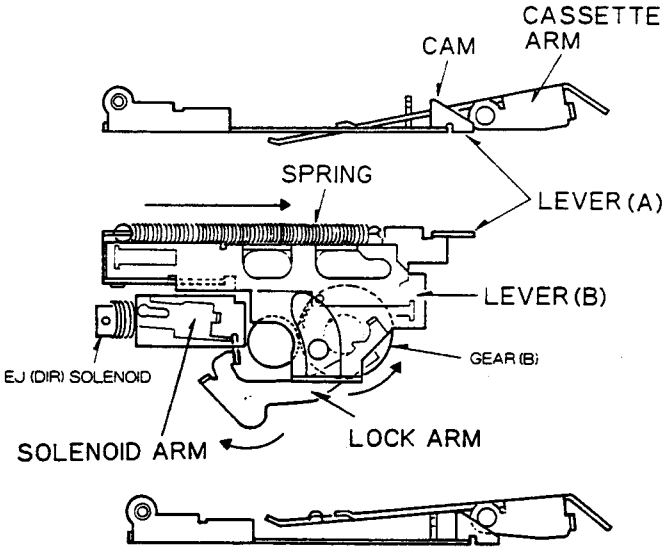

Fig. 26

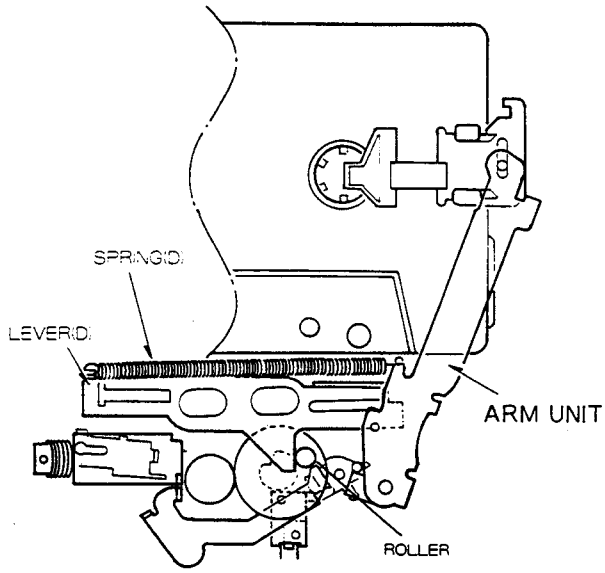

Fig. 29

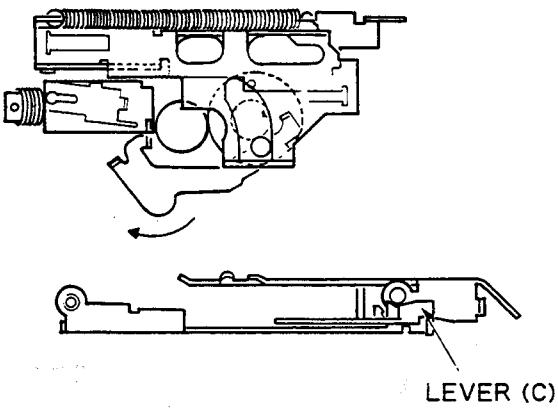

Fig. 27

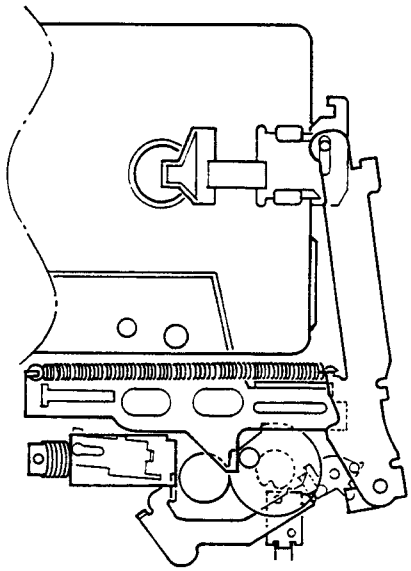

Fig. 30

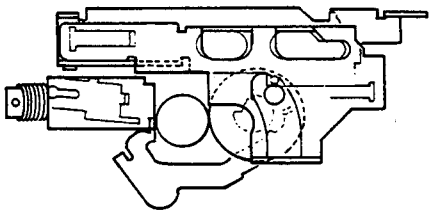

Fig. 28

www.manualscenter.com