PIONEER®
The Art of Entertainment

Service Manual

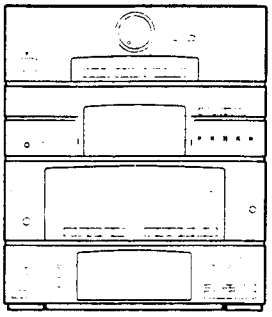

ORDER NO.
RRV1011

STEREO CD DECK RECEIVER

XR-J22M
XR-J11M
XR-J22
XR-J11

www.manualscenter.com

THIS MANUAL IS APPLICABLE TO THE FOLLOWING MODEL(S) AND TYPE(S).

Type	Model				Power Requirement	The voltage can be converted by the following method.
	XR-J22M	XR-J11M	XR-J22	XR-J11		
SDXJ	○	○	○	○	AC110V/120−127V/220V/240V	With the voltage selector
YPWXJ	○	○	○	○	AC240V	———
HEXJ	—	—	○	○	AC220−230V	AC240V, *
HBXJ	—	—	○	○	AC240V	AC220−230V, *
HEWZIXJ	—	—	○	○	AC220−230V	AC240V, *
KUXJ	—	○	—	—	AC120V	———
KCXJ	—	○	—	—	AC120V	———

*: Alter the wiring of the Power-supply block at the primary winding of Power transformer referring to the "Line Voltage Selection" described in Service Manual.

CONTENTS

CHAPTER 1
1.1 SAFETY INFORMATION ····· 1−2
1.2 PANEL FACILITIES ····· 1−5
1.3 SPECIFICATIONS ····· 1−13
1.4 ADJUSTMENTS ····· 1−15
1.5 PARTS LIST FOR PACKING AND EXPLODED VIEWS ····· 1−33
1.6 PCB PARTS LIST ····· 1−49

CHAPTER 2
2.1 PACKING AND EXPLODED VIEWS ··· 2−3
2.2 SCHEMATIC AND PCB CONNECTION DIAGRAMS ····· 2−13

PIONEER ELECTRONIC CORPORATION 4-1, Meguro 1-Chome, Meguro-ku, Tokyo 153, Japan
PIONEER ELECTRONICS SERVICE INC. P.O. Box 1760, Long Beach, California 90801 U.S.A.
PIONEER ELECTRONICS OF CANADA, INC. 300 Allstate Parkway Markham, Ontario L3R 0P2 Canada
PIONEER ELECTRONIC [EUROPE] N.V. Haven 1087 Keetberglaan 1, 9120 Melsele, Belgium
PIONEER ELECTRONICS AUSTRALIA PTY. LTD. 178-184 Boundary Road, Braeside, Victoria 3195, Australia TEL: [03] 580-9911
© PIONEER ELECTRONIC CORPORATION 1994

CHAPTER 1

1.1 SAFETY INFORMATION

This service manual is intended for qualified service technicians; it is not meant for the casual do-it-yourselfer. Qualified technicians have the necessary test equipment and tools, and have been trained to properly and safely repair complex products such as those covered by this manual.
Improperly performed repairs can adversely affect the safety and reliability of the product and may void the warranty. If you are not qualified to perform the repair of this product properly and safely, you should not risk trying to do so and refer the repair to a qualified service technician.

WARNING
Lead in solder used in this product is listed by the California Health and Welfare agency as a known reproductive toxicant which may cause birth defects or other reproductive harm (California Health & Safety Code, Section 25249.5).
When servicing or handling circuit boards and other components which contain lead in solder, avoid unprotected skin contact with the solder. Also, when soldering do not inhale any smoke or fumes produced.

NOTICE
(FOR CANADIAN MODEL ONLY)
Fuse symbols (fast operating fuse) and/or (slow operating fuse) on PCB indicate that replacement parts must be of identical designation.

REMARQUE
(POUR MODÈLE CANADIEN SEULEMENT)
Les symboles de fusible (fusible de type rapide) et/ou (fusible de type lent) sur CCI indiquent que les pièces de remplacement doivent avoir la même désignation.

(FOR USA MODEL ONLY)

1. SAFETY PRECAUTIONS

The following check should be performed for the continued protection of the customer and service technician.

LEAKAGE CURRENT CHECK

Measure leakage current to a known earth ground (water pipe, conduit, etc.) by connecting a leakage current tester such as Simpson Model 229-2 or equivalent between the earth ground and all exposed metal parts of the appliance (input/output terminals, screwheads, metal overlays, control shaft, etc.). Plug the AC line cord of the appliance directly into a 120V AC 60Hz outlet and turn the AC power switch on. Any current measured must not exceed 0.5mA.

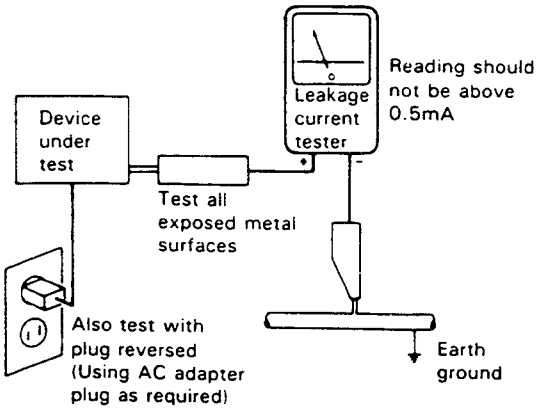

AC Leakage Test

ANY MEASUREMENTS NOT WITHIN THE LIMITS OUTLINED ABOVE ARE INDICATIVE OF A POTENTIAL SHOCK HAZARD AND MUST BE CORRECTED BEFORE RETURNING THE APPLIANCE TO THE CUSTOMER.

2. PRODUCT SAFETY NOTICE

Many electrical and mechanical parts in the appliance have special safety related characteristics. These are often not evident from visual inspection nor the protection afforded by them necessarily can be obtained by using replacement components rated for voltage, wattage, etc. Replacement parts which have these special safety characteristics are identified in this Service Manual.

Electrical components having such features are identified by marking with a ⚠ on the schematics and on the parts list in this Service Manual.
The use of a substitute replacement component which dose not have the same safety characteristics as the PIONEER recommended replacement one, shown in the parts list in this Service Manual, may create shock, fire, or other hazards.

Product Safety is continuously under review and new instructions are issued from time to time. For the latest information, always consult the current PIONEER Service Manual. A subscription to, or additional copies of, PIONEER Service Manual may be obtained at a nominal charge from PIONEER.

www.manualscenter.com

(FOR EUROPEAN MODEL ONLY)

VARO!
AVATTAESSA JA SUOJALUKITUS OHITETTAESSA OLET ALTTIINA NÄKYMÄTTÖMÄLLE LASERSÄTEILYLLE. ÄLÄ KATSO SÄTEESEEN.

ADVERSEL:
USYNLIG LASERSTRÅLING VED ÅBNING NÅR SIKKERHEDSAFBRYDERE ER UDE AF FUNKTION UNDGÅ UDSAETTELSE FOR STRÅLING.

VARNING!
OSYNLIG LASERSTRÅLNING NÄR DENNA DEL ÄR ÖPPNAD OCH SPÄRREN ÄR URKOPPLAD. BETRAKTA EJ STRÅLEN.

LASER
Kuva 1
Lasersateilyn varoitusmerkki

WARNING!
DEVICE INCLUDES LASER DIODE WHICH EMITS INVISIBLE INFRARED RADIATION WHICH IS DANGEROUS TO EYES. THERE IS A WARNING SIGN ACCORDING TO PICTURE 1 INSIDE THE DEVICE CLOSE TO THE LASER DIODE.

IMPORTANT
THIS PIONEER APPARATUS CONTAINS LASER OF CLASS 1.
SERVICING OPERATION OF THE APPARATUS SHOULD BE DONE BY A SPECIALLY INSTRUCTED PERSON.

LASER DIODE CHARACTERISTICS
MAXIMUM OUTPUT POWER: 5 mw
WAVELENGTH: 780-785 nm

LASER
Picture 1
Warning sign for laser radiation

LABEL CHECK

Additional Laser Caution

1. Laser Interlock Mechanism
   The position of the switch (S601) for detecting loading state is detected by the system microprocessor, and the design prevents laser diode oscillation when the switch (S601) is not on $\overline{\text{CLMP}}$ terminal side (CLMP signal is OFF or high level.).
   Thus, the interlock will no longer function if the switch (S601) is deliberately set to $\overline{\text{CLMP}}$ terminal side. (low level).
   The interlock also does not function in the test mode*.
   Laser diode oscillation will continue, if pin 1 of M51593FP (IC101) on the PRE-AMP BOARD ASSY mounted on the pickup assembly is connected to GND, or pin 19 is connected to low level (ON), or else the terminals of Q101 are shorted to each other (fault condition).

2. When the cover is opened, close viewing of the objective lens with the naked eye will cause exposure to a Class 1 laser beam.

* : Refer to page 1 – 24.

www.manualscenter.com

HEXJ and HEWZIXJ Types

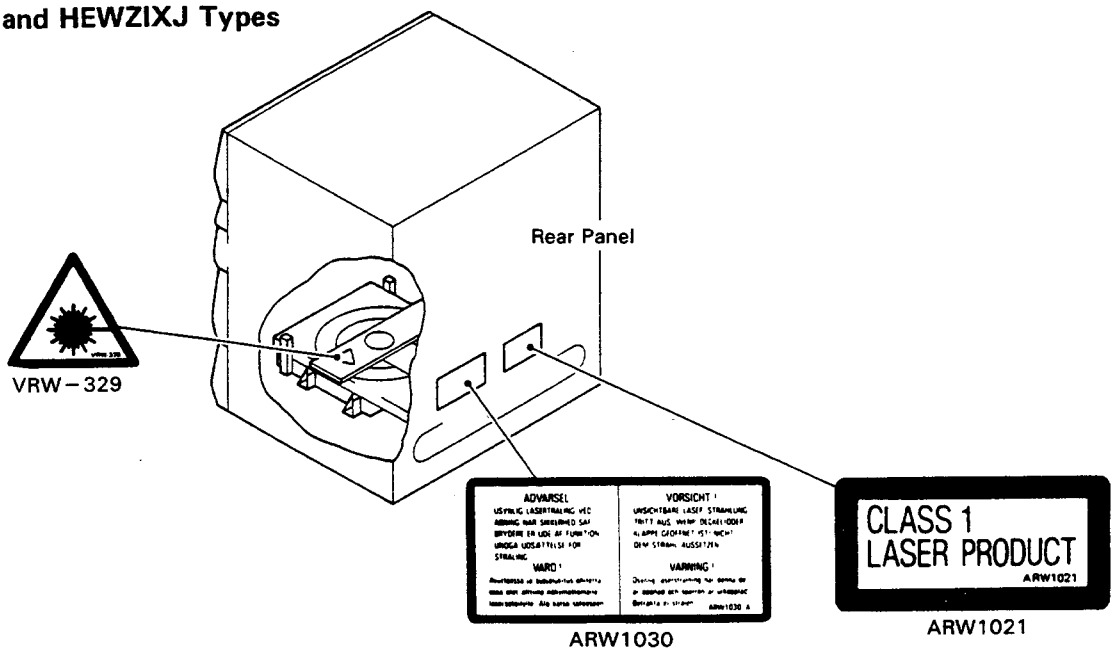

HBXJ Type

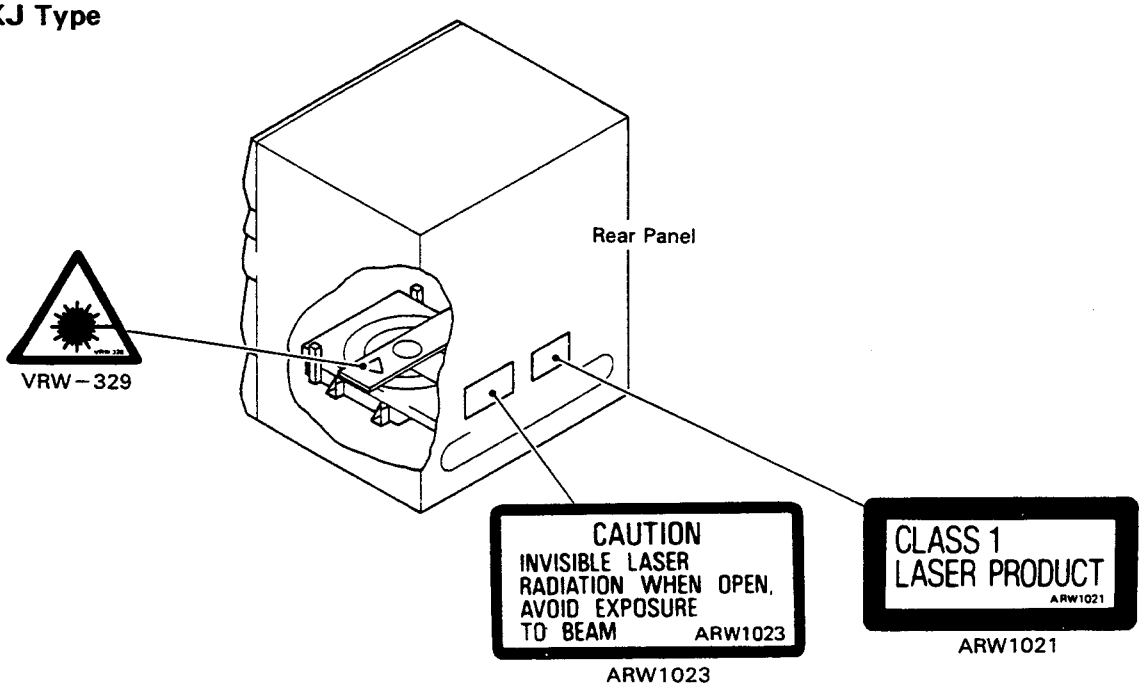

www.manualscenter.com

1.2 PANEL FACILITIES

FOR XR−J22M AND XR−J11M

XR-J22M

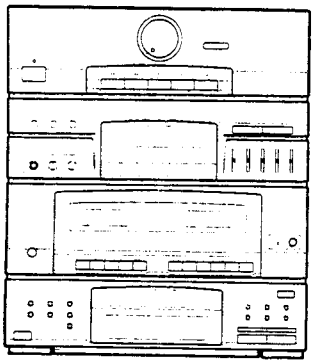

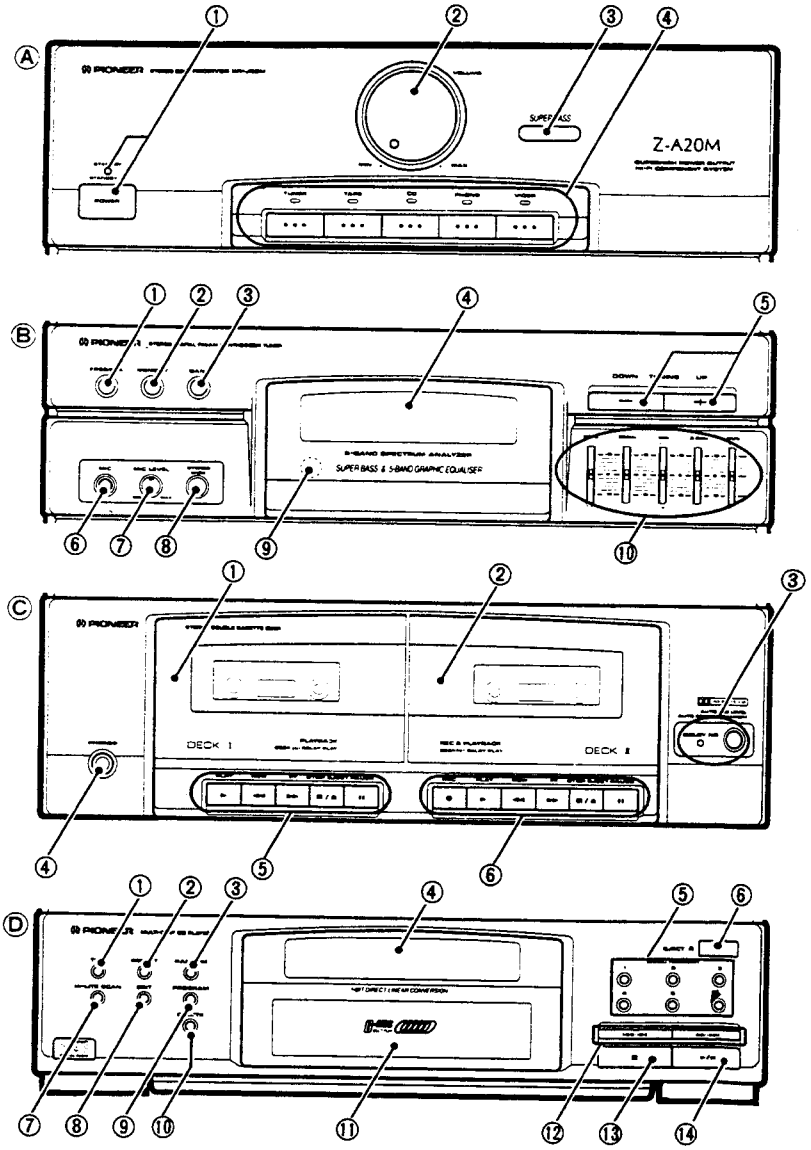

• Illustration shows Australian and multi-voltage models of XR-J22M.

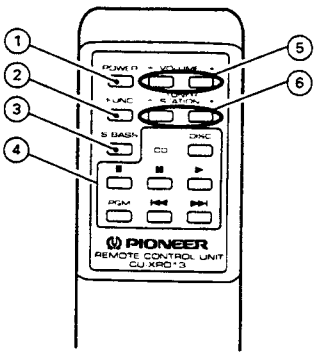

www.manualscenter.com

FRONT PANEL FACILITIES

Stereo multi-play CD cassette deck receiver: XR-J11M/XR-J22M

Ⓐ: ◪ Amplifier Section

① POWER STANDBY/ON switch /STANDBY indicator

This is the switch for electric power.

ON : When set to the ON position, power is supplied and the unit becomes operational.

STANDBY : When set to the STANDBY position, the main power flow is cut and the unit is no longer fully operational. A minute flow of power feeds the unit to maintain operation readiness.
The unit is in STANDBY when only the STANDBY indicator above the POWER switch is lit.

② VOLUME control

③ SUPER BASS button

Set to ON to augment bass frequency response.
The indication lights in the display section ④ when SUPER BASS is ON.

④ Input selector buttons

[TUNER]
Press to listen to radio broadcast.
[TAPE]
Press to listen to cassette tape.
[CD]
Press to listen to a CD.
[PHONO]
Press to play records on a turntable connected to the PHONO jacks.
[VIDEO]
Press to listen to a video cassette recorder connected to the VIDEO jacks.

Ⓑ: ◪ Tuner and Graphic Equalizer Section

① FREQ/STA button

② MEMORY button

Used for memorizing stations

③ BAND selector button

Each time this button is pressed, FM or AM reception is selected alternately.

④ Display section

Shows the received broadcast frequency or station call number, reception conditions, and graphic equalizer level settings, etc.
FM and MHz light: FM reception.
AM and kHz light: AM reception.
Channel display: Station call number display
STEREO indicator: Lights when an FM stereo broadcast is received.
TUNED indicator: Lights when a broadcast is received and tuned in well.
S.BASS indicator: Lights when SUPER BASS is ON.
ST WIDE indicator: Lights when STEREO WIDE is ON (XR-J22M only).
Spectrum analyzer display: 5 band level display (XR-J22M only).

⑤ TUNING +, − (UP, DOWN) buttons

Used for locating stations.
Use "−" button for lower, and "+" button for higher station no. or frequencies.

⑥ MIC (Microphone) jack (XR-J22M only)

This is a standard jack for connecting a microphone.

⑦ MIC LEVEL control (XR-J22M only)

Used for adjusting the volume of the microphone.

⑧ STEREO WIDE button (XR-J22M only)

By turning this switch ON, you can enjoy STEREO WIDE reproduction.
The indicator lights in the display section ④ when STEREO WIDE is ON.

NOTE:
In the case of monaural source, STEREO WIDE effects cannot be obtained.

⑨ Remote sensor window (REMOTE SENSOR)

⑩ Graphic equalizer controls

www.manualscenter.com

Ⓒ: ◪ Cassette Deck Section

- Use TYPE I (normal) tape.
- Tapes can be played back on Deck I; tapes can be played back and recorded on Deck II.

① Deck I cassette door

② Deck II cassette door

③ DOLBY* NR switch (Except for Australian and multi-voltage models of XR-J11M)

Set this switch to the ON position to activate the DOLBY NR system.

- Tapes recorded using Dolby noise reduction should always be played back with the noise reduction system on. Sound quality will be adversely affected if played back with the system off, or if tapes recorded using a different noise reduction system are played back with the Dolby NR system on.
- It is recommended that tapes recorded with Dolby B type NR be so marked on the label. This will help prevent incorrect setting of the noise reduction switch during playback.

*

Dolby noise reduction manufactured under license from Dolby Laboratories Licensing Corporation.
"DOLBY" and the double-D symbol DD are trademarks of Dolby Laboratories Licensing Corporation.

④ PHONES (Headphones) jack

For stereo headphones.

NOTE:
There is no output from the speakers when headphones are plugged into PHONES jack.

⑤ Deck I operation buttons

► (PLAY)	For playing back a tape.
►► (F.F.)	Fast forward
◄◄ (REW)	Rewind
■/⏏ (STOP/EJECT)	Press to stop playback. Pressing when the deck has stopped playing opens the cassette door.
❚❚ (PAUSE)	Temporarily stops tape travel. Cancels pause mode when pressed again.

⑥ Deck II operation buttons

● (REC)	Press this button, and the ► button is simultaneously pressed for you to start recording.
► (PLAY)	For playing back a tape.
►► (F.F.)	Fast forward
◄◄ (REW)	Rewind
■/⏏ (STOP/EJECT)	Press to stop recording or playback, and to eject the cassette tape.
❚❚ (PAUSE)	Press to pause during playback or recording. To cancel the pause mode, press again.

www.manualscenter.com

Ⓓ: ◪ CD Player Section

① TIME button

Use to select the method for displaying the playing time on the display section.
Each time the button is pressed, the indication changes from TIME, REMAIN (track remain) and REMAIN (disc remain) : This will not be displayed during programmed playback to TOTAL in that order.

② REPEAT button

Press this button for repeat playback. Pressing the button once, twice, or three times will change the repeat mode from single track repeat, all tracks repeat, to repeat playback cancellation, respectively.

③ RANDOM play button

Press to begin random playback.

④ Display section

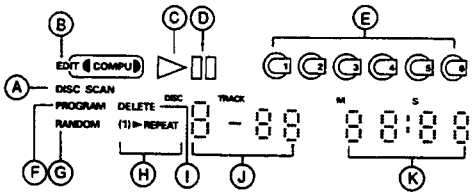

Ⓐ DISC SCAN	: Lights after pressing the HI-LITE SCAN button.
Ⓑ EDIT ◖ COMPU ◗	: Normally [EDIT COMPU] is lit. When the EDIT button is pressed, ◖ ◗ lights up.
Ⓒ ▷	: Lights during playback.
Ⓓ ❚❚	: Lights during temporarily interrupted playback.
Ⓔ ⊙ <DISC symbol>	: If a nonexistent disc is searched for, the corresponding disc symbol goes off.
Ⓕ PROGRAM	: Lights after programming (after program has been memorized).
Ⓖ RANDOM	: Lights during random playback.
Ⓗ (1)►REPEAT	: Lights during repeat playback of one tune. (1) extinguishes during repeat playback of all tunes.
Ⓘ DELETE	: Lights during the delete program.
Ⓙ 8-88	: Indicates the disc and the track currently being heard.
Ⓚ 88:88	: Displays the minutes and seconds of the elapsed time, total playback time, and remaining time.

NOTE:
When power is turned on, the CD player section indicators show different indications depending on the condition (disc loaded or not, etc.) prior to when the power was turned off. This is not a malfunction.

⑤ DISC NUMBER buttons (1—6)

Use to select disc numbers for playback or programming.

⑥ EJECT button (⏏)

Press to eject a magazine. When pressed, any magazine inside is expelled forward.

⑦ HI-LITE SCAN button

If this button is pressed while the unit is stopped, the first 10 seconds after the first minute of the first tune on each of the discs from DISC 1 to DISC 6 are played back in sequence (DISC SCAN). If this button is pressed during DISC SCAN, the first ten seconds after the first minute of all the tunes on each of the discs from DISC 1 to DISC 6 is played back (TRACK SCAN).
To reset the start-up time of HI-LITE SCAN, press the HI-LITE SCAN button during normal playback.
Enter the time of current playback in memory and 10-second passages on all the remaining tracks are played back at the memorized time.

⑧ EDIT button

Press this button and designate the number of minutes of tape for recording with the Manual/Track search button. The CD player then selects tunes and programs them automatically for recording so that the unrecorded portion at the end of the tape is minimized.

⑨ PROGRAM button

Use to program a sequence of tracks.

- When this button is pressed, the "PROGRAM" indicator will light. Select a desired disc and track with DISC NUMBER buttons and Manual/Track search buttons. Tunes will be added to the order in which they are specified.
- If only a DISC NUMBER button is pressed, all tracks on the specified disc will be added to the program. The letters "AL" will appear on the indicator.

⑩ DELETE button

Pressing this button and then selecting the discs with the DISC NUMBER buttons (1 through 6) and selecting the tracks with the Manual/Track search buttons will result in the selected discs and tracks not being played even when the play/pause button is pressed.

⑪ Magazine insertion slot

⑫ Manual/Track search buttons (⏮ · ◀◀, ▶▶ · ⏭)

These buttons are used for track search and manual search during normal playback, programmed playback or pause. When these buttons are pressed, either the previous tune or the next tune is established. If they are kept depressed, either fast forward or reverse is established, depending upon the direction of button pressed.

⑬ Stop button (■)

Press to stop playback. When pressed, the player goes into stop mode and all operations stop.
[LAST DISC MEMORY]
If no program had been input when the stop button (■) is pressed to stop the disc, the number of the disc that was just played will be displayed (the track number is "01").
When the stop button (■) is pressed another time, the DISC NUMBER displayed will change to "1".
If a program had been input, the disc will be stopped with the DISC NUMBER of the first step and song number displayed.

⑭ Play/Pause button (▶/❚❚)

During stop, press this button to start playback. During playback, press this button to pause.
When this button is pressed during Hi-light scan, the Hi-light scan will be released, and the disc will be played normally.

www.manualscenter.com

FOR XR−J22 AND XR−J11

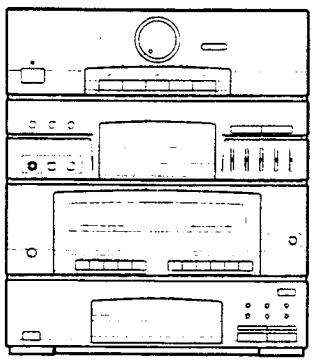

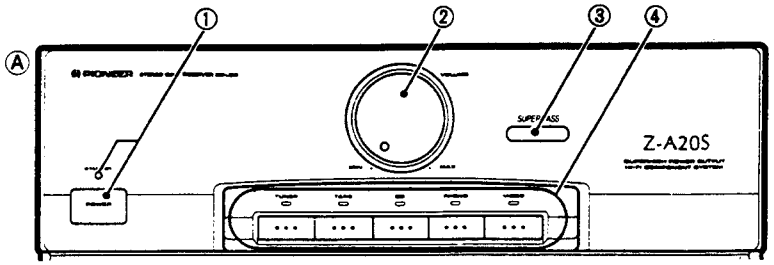

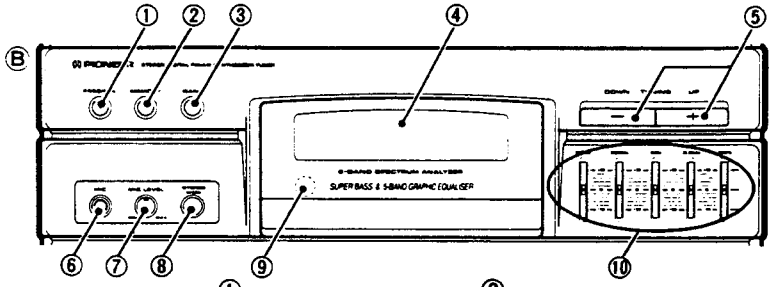

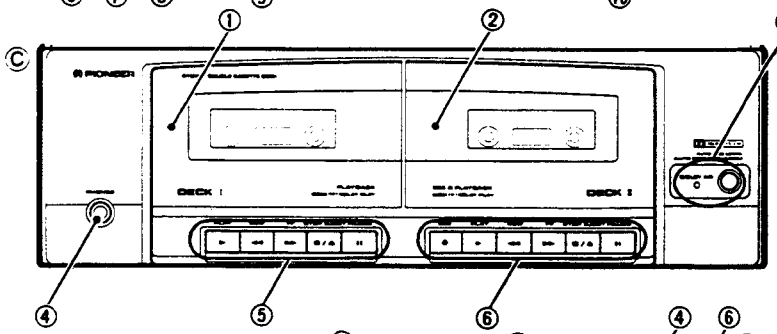

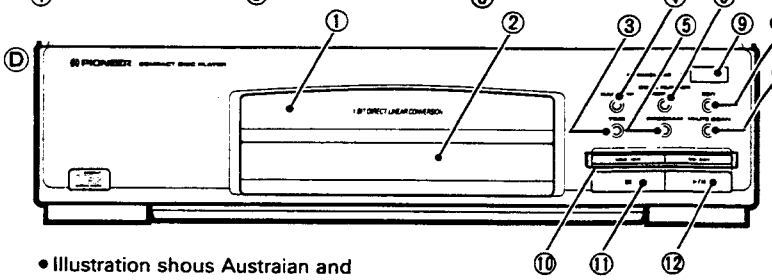

• Illustration shous Austraian and multi-voltage models of XR-J22.

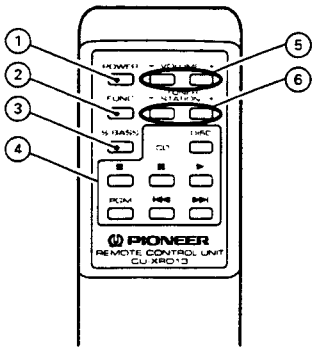

www.manualscenter.com

FRONT PANEL FACILITIES

CD cassette deck receiver XR-J11/XR-J22

Ⓐ: ◪ Amplifier Section

① POWER STANDBY/ON switch /STANDBY indicator

This is the switch for electric power.

ON : When set to the ON position, power is supplied and the unit becomes operational.

STANDBY : When set to the STANDBY position, the main power flow is cut and the unit is no longer fully operational. A minute flow of power feeds the unit to maintain operation readiness.
The unit is in STANDBY when only the STANDBY indicator above the POWER switch is lit.

② VOLUME control

③ SUPER BASS button

Set to ON to augment bass frequency response.
The indication lights in the display section ④ when SUPER BASS is ON.

④ Input selector buttons

[TUNER]
Press to listen to radio broadcast.
[TAPE]
Press to listen to cassette tape.
[CD]
Press to listen to a CD.
[PHONO]
Press to play records on a turntable connected to the PHONO jacks.
[VIDEO]
Press to listen to a video cassette recorder connected to the VIDEO jacks.

www.manualscenter.com

Ⓑ: ◪ Tuner and Graphic Equalizer Section

① FREQ/STA button

② MEMORY button

Used for memorizing stations.

③ BAND selector button

Each time this button is pressed, FM or AM reception is selected alternately.

④ Display section

Shows the received broadcast frequency or station call number, reception conditions, and graphic equalizer level settings, etc.
FM and MHz light: FM reception.
AM and kHz light: AM reception.
Channel display: Station call number display.
STEREO indicator: Lights when an FM stereo broadcast is received.
TUNED indicator: Lights when a broadcast is received and tuned in well.
S. BASS indicator: Lights when SUPER BASS is ON.
ST WIDE indicator: Lights when STEREO WIDE is ON (XR-J22 only).
Spectrum analyzer display: 5 band level display (XR-J22 only).

⑤ TUNING +, − (UP, DOWN) buttons

Used for locating stations.
Use "−" button for lower, and "+" button for higher station no. or frequencies.

⑥ MIC (Microphone) jack (XR-J22 only)

This is a standard jack for connecting a microphone.

⑦ MIC LEVEL control (XR-J22 only)

Used for adjusting the volume of the microphone.

⑧ STEREO WIDE button (XR-J22 only)

By turning this switch ON, you can enjoy STEREO WIDE reproduction.
The indicator lights in the display section ④ when STEREO WIDE is ON.

NOTE:
In the case of monaural source, STEREO WIDE effects cannot be obtained.

⑨ Remote sensor window (REMOTE SENSOR)

⑩ Graphic equalizer controls

Ⓒ: ◪ Cassette Deck Section

- Use TYPE I (normal) tape.
- Tapes can be played back on Deck I; tapes can be played back and recorded on Deck II.

① Deck I cassette door

② Deck II cassette door

③ DOLBY* NR switch (Except for Australian and multi-voltage models of XR-J11)

Set this switch to the ON position to activate the DOLBY NR system.

- Tapes recorded using Dolby noise reduction should always be played back with the noise reduction system on. Sound quality will be adversely affected if played back with the system off, or if tapes recorded using a different noise reduction system are played back with the Dolby NR system on.
- It is recommended that tapes recorded with Dolby B type NR be so marked on the label. This will help prevent incorrect setting of the noise reduction switch during playback.

*

Dolby noise reduction manufactured under license from Dolby Laboratories Licensing Corporation.
"DOLBY" and the double-D symbol DD are trademarks of Dolby Laboratories Licensing Corporation.

④ PHONES (Headphones) jack

For stereo headphones.

NOTE:
There is no output from the speakers when headphones are plugged into PHONES jack.

⑤ Deck I operation buttons

► **(PLAY)** ..... For playing back a tape.
►► **(F.F.)** ..... Fast forward.
◄◄ **(REW)** ..... Rewind.
■/⏏ **(STOP/EJECT)** .... Press to stop playback. Pressing when the deck has stopped playing opens the cassette door.
❚❚ **(PAUSE)** ..... Temporarily stops tape travel. Cancels pause mode when pressed again.

⑥ Deck II operation buttons

● **(REC)** ..... Press this button, and the ► button is simultaneously pressed for you to start recording.
► **(PLAY)** ..... For playing back a tape
►► **(F.F.)** ..... Fast forward
◄◄ **(REW)** ..... Rewind
■/⏏ **(STOP/EJECT)** .... Press to stop recording or playback, and to eject the cassette tape.
❚❚ **(PAUSE)** ..... Press to pause during playback or recording. To cancel the pause mode, press again.

Ⓓ: ◪ CD Player Section

① Disc tray

② Display section

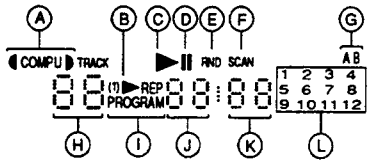

Ⓐ ◖◗ : Display when EDIT recording is set or used.
Ⓑ **(1) ►REP** : Lights during repeat playback of single track or all tracks.
Ⓒ ► : Lights during playback
Ⓓ ❚❚ : Lights during temporarily interrupted playback.
Ⓔ **RND** : Lights during random playback.
Ⓕ **SCAN** : Lights during HI-LITE SCAN playback.
Ⓖ **A/B (music calendar)**
: Tape side A/Tape side B
After editing, the track numbers that an be recorded on the A (B) side of the tape will light.
Ⓗ **Track (figure)**
: Displays the current track number (during normal playback and programmed playback) or the track being programmed (during programmed operation).
Ⓘ **PROGRAM**: Lights after programming (after program has been memorized).
Ⓙ **Minutes (figure)**
: Displays the minutes of the elapsed time, total playback time, and remaining time.
Ⓚ **Seconds (figure)**
: Displays the seconds of the elapsed time, total playback time, and remaining time.
Ⓛ **1—12 (music calendar)**
: Displays the track numbers.

NOTE:
When power is turned ON, the CD player section indicators show different indications depending on the condition (disc loaded or not, etc.) prior to when the power was turned off. This is not a malfunction.

③ TIME button

This button selects the display mode. Each time this button is pressed, the display changes from Time, Remain, to Total in that order.

- **Time**: Displays the track number of the track being played (TRACK) and the elapsed time (minutes and seconds).
- **Remain**: Displays the remaining time on the track being played. When the TIME button is pressed again, the remaining time on the disc being played will be displayed.
- **Total**: Displays the total number of tracks on the disc (TRACK) and the total playback time will be displayed.

www.manualscenter.com

④ RANDOM play button

Press to begin random playback.

⑤ PROGRAM button

Use to program a sequence of tracks.

- Press this button after selecting a desired Track with track search button. Tunes will be added to the program in the order in which they are specified.

⑥ REPEAT button

Press this button for repeat playback. Pressing this button once, twice, or three times will change the repeat mode from single track repeat, all tracks repeat, to repeat playback cancellation, respectively.

⑦ HI-LITE SCAN button

10 second passages are played stating from the first minute of each track on the CD, in sequence, beginning with the first track.
To set the point in the tracks you want to scan, press this button during playback. The elapsed time is memorized, and then ten second passages of all the remaining tracks are played at the memorized time.

⑧ EDIT button

Press this button, and with the Manual/Track search buttons (⏮ · ◀◀, ▶▶ · ⏭) specify the length of tape you want to use for recording. Before recording, the CD player automatically programs the order of tracks to minimize the amount of unused tape at the end of a selected tape length.

⑨ OPEN/CLOSE button

Press when you wish to eject a disc. Each time this button is pressed, the tray is alternately pushed out or pulled in.

⑩ Manual/Track search buttons (⏮ · ◀◀, ▶▶ · ⏭)

Use these buttons to perform track search and manual search during regular playback, programmed playback, or during pause.
Press a button to skip to the previous or the next track. You will continue moving to the next track in the direction of the button you pressed as long as you continue pressing the button.
Keep the button depressed until you come to the part you want to listen to.

⑪ Stop button (■)

Press to stop playback. When pressed, the player goes into stop mode and all operations stop.
Press to clear a program. When pressed during stop mode, the program stored in memory is cleared.

⑫ Play/Pause button (▶/❚❚)

Press to begin playback.
When playing back, press to temporarily interrupt playback. When pressed again, the pause mode is canceled and playback resumes.

www.manualscenter.com

1.3 SPECIFICATIONS

FOR XR−J22M AND XR−J11M

Stereo multi-play CD cassette deck receiver: XR-J11M/XR-J22M

Amplifier Section

[XR-J11M U.S. and Canadian models]

Continuously Average Power Output is 100 Watts* per channel, min., at 8 ohms from 70 Hertz to 20,000 Hertz, with no more than 0.9 % total harmonic distortion.**

** Measured pursuant to the Federal Trade Commission's Trade Regulation rules on Power Output Claims for Amplifiers.*

[XR-J11M/XR-J22M Multi-voltage and Australian models]

Peak music power output ..... 600 W/6 Ω
Continuous power output (RMS) ..... 50 W + 50 W (1 kHz, T.H.D. 10 %, 6 Ω)

Graphic equalizer frequency band ..... 100 Hz, 330 Hz, 1 kHz, 3.3 kHz, 10 kHz, ±7 dB

Cassette Deck Section

Systems ..... 4 track, 2-channel stereo
Heads ..... Recording/playback head x 1
Playback head x 1
Erasing head x 1
Motor ..... DC servo 2 speed motor x 1
Wow and flutter ..... No more than 0.3 % (WRMS)
Fast winding time ..... Approximately 105 seconds (C-60 tape)
Frequency response (−20 dB recording):
TYPE I (Normal) ..... 35 Hz to 14,000 Hz ±6 dB
Signal-to-Noise ratio
Dolby NR OFF ..... More than 50 dB
Noise reduction effect (only models featuring built-in Dolby NR)
Dolby B type NR ON ..... More than 10 dB (at 5 kHz)

FM Tuner Section

Frequency range ..... 87.5 MHz to 108 MHz
Usable sensitivity ..... Mono: 14.2 dBf, IHF (1.4 μV/75 Ω)
Signal-to-Noise ratio (IHF, 85 dBf Input) ..... Mono: 70 dB
Antenna input ..... 75 Ω unbalanced

AM Tuner Section

Frequency range
With 10 kHz step ..... 530 kHz to 1,700 kHz
With 9 kHz step ..... 531 kHz to 1,602 kHz
Sensitivity (IHF, Loop antenna) ..... 385 μV/m
Antenna ..... Loop antenna

CD Section

Type ..... Compact disc digital audio system
Frequency response ..... 4 Hz to 20 kHz
Number of channels ..... 2 channels (stereo)

Accessories

Operating Instructions 1
Remote control unit 1
Dry cell batteries "AA" (IEC R6/UM-3) 2
FM antenna 1
AM loop antenna 1
6-compact disc magazine 1

Miscellaneous

Power requirements
U.S. and Canadian models ..... AC 120 V, 60 Hz
Australian model ..... AC 240 Volts ~, 50/60 Hz
Multi-voltage model ..... AC 110/120—127/220/240 V (Switchable), 50/60 Hz

Power consumption
U.S., Australian and Multi-voltage models ..... 250 W
Canadian models ..... 350 VA
Dimensions ..... 360 (W) x 420 (H) x 348.3 (D) mm
14-3/16 (W) x 16-1/2 (H) x 13-11/16 (D) in
Weight (without package)
U.S. and Canadian models ..... 11 kg (24 lbs, 4 oz)
Australian and Multi-voltage models .... 9.3 kg (20 lbs, 7-3/8 oz)

The Magazine Type Multi-Play CD Players with mark and the Magazines with the same mark are compatibles for 5-inch (12 cm) discs.

www.manualscenter.com

FOR XR−J22 AND XR−J11

Stereo CD Cassette Deck Receiver: XR-J11/XR-J22

Amplifier Section
Music power (DIN) ..... 95 W + 95 W (1 kHz, T.H.D. 1 %, 8 Ω)
Peak music power output
(Multi-voltage and Australian models only) ..... 600 W/6 Ω
Continuous power output (RMS)
Multi-voltage and Australian models ..... 50 W + 50 W (1 kHz, T.H.D. 10 %, 6 Ω)
U.K. model ..... 50 W + 50 W (1 kHz, T.H.D. 10 %, 8 Ω)
Graphic equalizer frequency band ..... 100 Hz, 330 Hz, 1 kHz, 3.3 kHz, 10 kHz, ±7 dB

Cassette Deck Section
Systems ..... 4 track, 2-channel stereo
Heads ..... Recording/playback head x 1
Playback head x 1
Erasing head x 1
Motor ..... DC servo 2 speed motor x 2
Wow and flutter ..... No more than 0.3 % (WRMS)
Fast winding time ..... Approximately 105 seconds (C-60 tape)
Frequency response (−20 dB recording):
TYPE I (Normal) ..... 35 Hz to 14,000 Hz ±6 dB
Signal-to-Noise ratio
Dolby NR OFF ..... More than 50 dB
Noise reduction effect
Dolby B type NR ON ..... More than 10 dB (at 5 kHz)

FM Tuner Section
Frequency range ..... 87.5 MHz to 108 MHz
Usable sensitivity ..... Mono: 14.2 dBf, IHF (1.4 μV/75 Ω)
Signal-to-Noise ratio (IHF, 85 dBf Input) ..... Mono: 70 dB
Antenna input ..... 75 Ω unbalanced

AM Tuner Section
Frequency range
With 10 kHz step ..... 530 kHz to 1,700 kHz
With 9 kHz step ..... 531 kHz to 1,602 kHz
Sensitivity (IHF, Loop antenna) ..... 385 μV/m
Antenna ..... Loop antenna

CD Section
Type ..... Compact disc digital audio system
Frequency responce ..... 4 Hz to 20 kHz
Number of channels ..... 2 channels (stereo)

Accessories
Operating Instructions 1
Remote control unit 1
Dry cell batteries "AA" (IEC R6/UM-3) 2
FM antenna 1
AM loop antenna 1

Miscellaneous
Power requirements
U.K. and Australian models ..... AC 240 Volts ~, 50/60 Hz
Multi-voltage model
..... AC 110/120—127/220/240 V (Switchable), 50/60 Hz
Power consumption ..... 250 W
Dimensions ..... 360 (W) x 420 (H) x 348.3 (D) mm
Weight (without package) ..... 8.6 kg

www.manualscenter.com

1.4 ADJUSTMENTS

1.4.1 TUNER SECTION

■ FM Tuner Section

- Set the mode selector to FM BAND.
- Connect the wiring as shown in Fig. 1−1.

※ All parts in the table belong to FM/AM TUNER MODULE.

Step No.	Adjustment Title	FM SG (1kHz, ±75kHz dev.)		Reception Frequency Display	Adjustment Location	Specifications
		Frequency (MHz)	Level (dBμV)			
1	Center Adjustment	98 Non modulation	80 or more	98MHz	L6207	Adjust so that the DC voltage between Pin 4 and Pin 28 of IC6201 becomes 0V±50mV.
2	Front End Sencitivity	98 (106)	0−30	98MHz (106MHz)	(L6104) (L6105) T6101 L6102	[After adjusting L6104 and L6105 so that the DC voltage of the Pin 12 of IC6201 (S-meter) becomes at maximum level,] adjust T6101 and L6102.
3	TUNED IND. Lighting Level	98 (106)	15±2	98MHz	VR6201	Adjust so that the indicators of TUNED IND. start to light up.

Notes:

- *Before adjusting, make sure there is no gap between L6101 and L6102 and between L6103 and L6104. If there is a gap between them, bring them into contact with each other first, and then make adjustments.*
- *Make indicator adjustments in order of AM → FM.*
- *Adjustment sequence*
  HEXJ, HBXJ and SDXJ types : L6102 → T6101
  HEWZIXJ type : L6104 → L6105 → L6102 → T6101
- *( ): XR−J22/HEWZIXJ and XR−J11/HEWZIXJ only.*

■ AM Tuner Section

- Set the mode selector to AM BAND.
- Connect the wiring as shown in Fig. 1−2.

※ All parts in the table belong to FM/AM TUNER MODULE.

Step No.	Adjustment Title	AM SG (400Hz, 30% Mod.)		Reception Frequency Display	Adjustment Location	Specifications
		Frequency (kHz)	Level (dBμV/m)			
1	TUNED IND. Lighting Level	999	47±2	999kHz	VR6202	After adjusting VR6202 so that it is illuminated when the ANT. input level is within 47±2 dBμV/m, confirm that it is extinguished at or below 40dBμV/m.

www.manualscenter.com

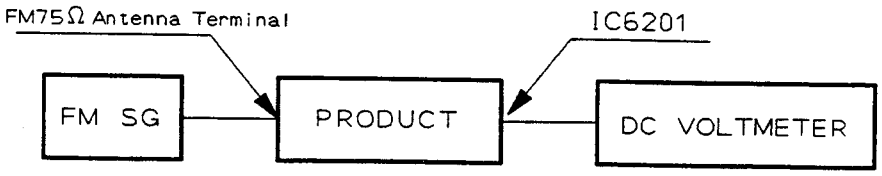

Fig. 1−1 FM Adjustment Connection Diagram

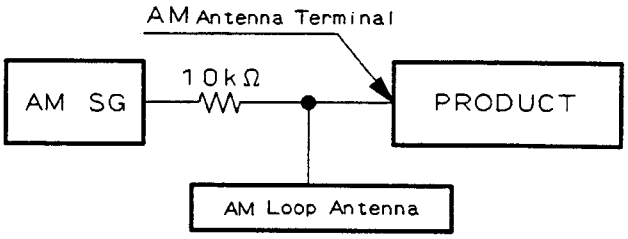

Fig. 1−2 AM (MW) Adjustment Connection Diagram

FM/AM TUNER MODULE

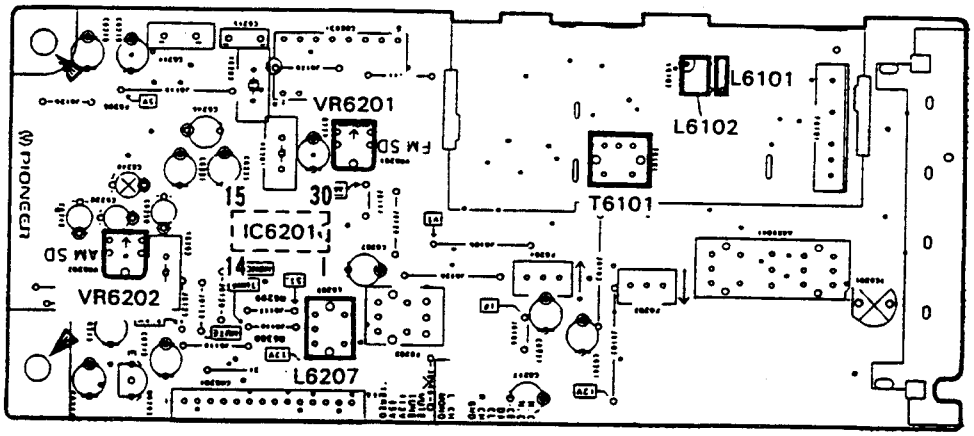

Fig. 1−3 Adjustment Points

www.manualscenter.com

1.4.2 POWER AMP MODULE SECTION (Refer to Fig. 2−1.)

1. Handling Precautions

- Since the heat sink and transistor metallic parts are connected to the Front Amp output, make sure they do not contact the GND (chassis) or other circuits.
- Since there is residual high voltage in the Power Amp Module Assy ±B1 (FRONT ASSY FOR 100W) and ±B2 (REAR, PWR, PRTEC ASSY) even when the power is OFF, caution should be exercised. (If necessary, the voltage should be discharged).
- When handling the Power Amp Module Assy, make sure you do not touch the fan motor blade.

2. Adjustment and Confirmation of Idle Current

- Basically, the idle current needs to be confirmed when replacing a power transistor, driver transistor, or bias transistor, or when the entire split board Assy of the Power Amp Module Assy has been replaced.
- Make sure the heat sink has cooled sufficiently before measuring the idle current. (Temperature should be the same as room temperature; 25°C is ideal, if possible.)
- Idle current stipulated value: 3−50mA.

■ Front Amp Side (FRONT ASSY FOR 100W)

※ All parts in the table belong to Power Amp Module Section.

Step	Measurement	Item	Remarks
1	Lch side	Insert a resistor (0.22Ω, 3W or more) in series in the connector CN7502 +B1 (or −B1) line (terminal No. 5 or 6). (Refer to Fig. 2−2.)	For measuring voltage at both sides of resistor
2		Short both sides of C7524.	Do not operate Rch side.
3		Turn the power ON, wait 6 seconds, and then measure the resistance voltage in Step 2.	Lch Idle current I=V/0.22 (Ω)
4	Rch side	● Same as Steps 1 and 2 above. ● Short both sides of C7523.	Do not operate Lch side.
5		Turn the power ON under the above conditions, and after 6 seconds measure the resistance voltage in Step 2.	
6	—	If the measured idle current is greater than 50mA, perform the following procedure.	
7	Lch side	Short between the Point A pattern in Fig. 2−3 using solder.	Connect R7517 to R7515 in a parallel circuit.
8	Rch side	Short between the Point B pattern in Fig. 2−3 using solder.	Connect R7518 to R7516 in a parallel circuit.
9	—	After performing Steps 8 and 9, remeasure the idle current and confirm that it is below 50mA. (within 3−50mA)	

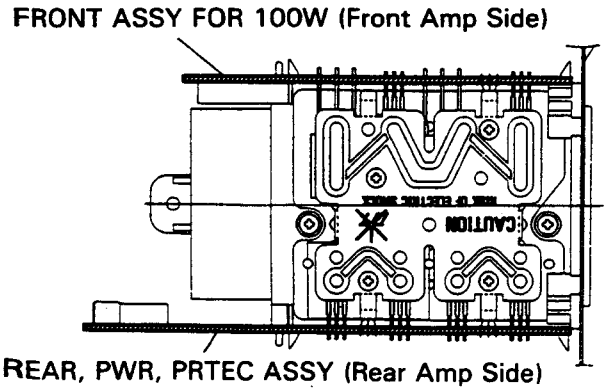

Fig. 2−1 Power Amp Module (POWER MOD. F100+R20)

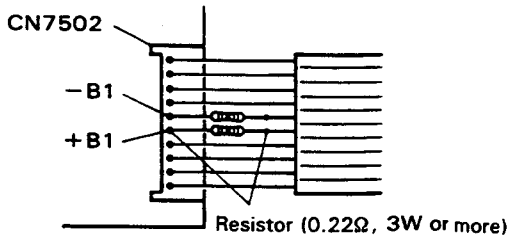

Fig. 2−2 FRONT ASSY FOR 100W

www.manualscenter.com

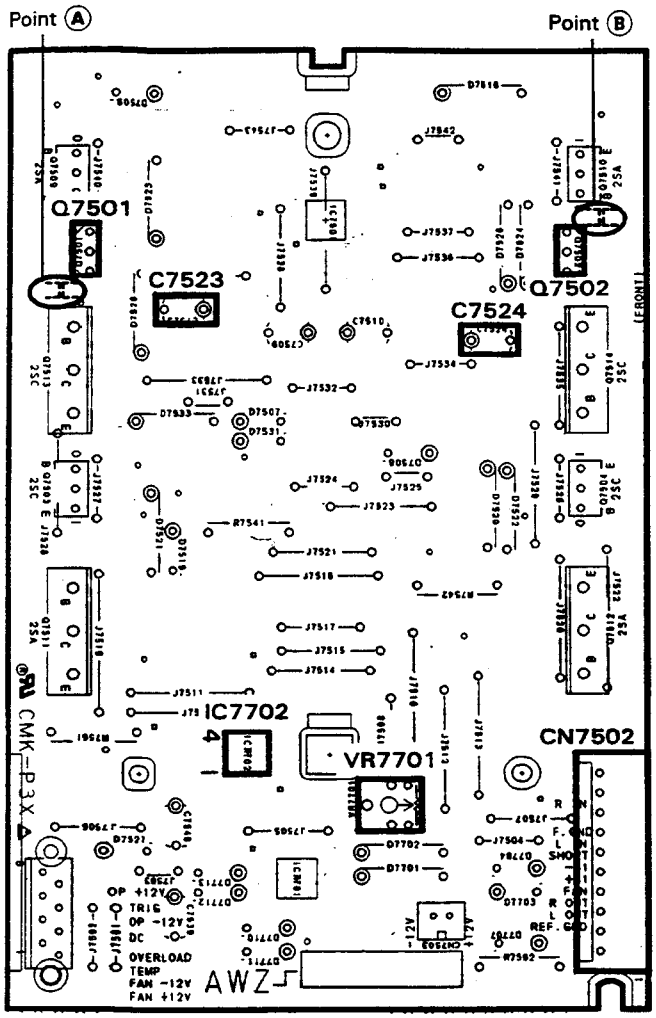

Fig. 2−3 FRONT ASSY FOR 100W
(This diagram is viewed from the foil side)

3. Adjusting the Operating Temperature Setting of the Fan Motor (VR7701)

Note : All parts in the sentence belong to Power Amp Module Section.

This adjustment is necessary when IC7403 (+12V regulator), Q7301 and Q7302 (temperature sensors), or VR7701 has been replaced, or when the entire split board Assy of the Power Amp Module Assy has been replaced.

■ Adjustment-Related Cautions

- Make sure the heat sink has sufficiently cooled (is the same as room temperature Ta.)
- Once the power has been turned ON, make measurements and adjustments as quickly as possible. (If too much time is taken, the heat sink temperature will rise, and the measurements will deviate from the Ta measurement point.)

■ Adjustment

1. Connect a voltmeter between TEMP and TP (or between IC7702 terminals No.3 and 2). (Refer to Figs. 2−3 and 2−4.)
2. Determine the fan motor operating temperature setting by means of the following formula. (Tolerance is within ±30mV.)
   Formula: (85°C − Ta) × 19 (mV)
   Ta: ambient temperature (°C)
3. Adjust VR7701 so that the voltage between TEMP and TP is the value obtained from the above formula.
   For example:
   when the room temperature is 25°C,
   set value = (85 − 25) × 19 (mV)
   = 1140mV (tolerance within ±30mV).

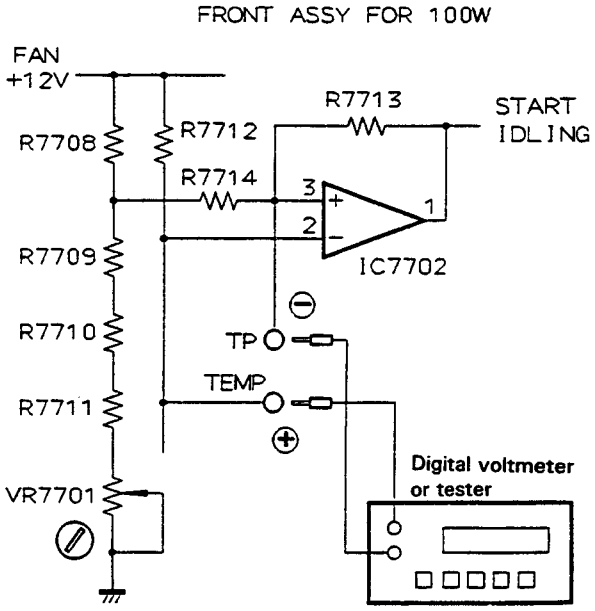

Fig. 2−4 Adjustment of Operating Temperature Setting of Fan Motor

www.manualscenter.com

1.4.3 CASSETTE DECK SECTION

1. Adjustment of Mechanical Section

● Test tape : STD−301 (3kHz 30min)

1. Adjustment of tape speed							
No.	Mode	Input signal & Test tape	Adjustment location		Measuring location	Adjustment value	Remarks
1	PLAY	Playback the STD-301 tape to 3kHz.	Deck I	DISPLAY assy VR4101	AF assy TP4401	Press the PLAY button and adjust the frequency to 3010Hz ±10Hz. Make sure that the wow and flutter is within 0.3%.	

2. Adjustment of Electric Section

■ Check and conduct the following before adjusting the electric section.

1. Adjustment of tape speed has been completed.
2. Clean and demagnetize the head using a head eraser.
3. When measured, the level should be 0dBV = 1 Vrms.
4. Use side A of the specified tape for adjustment.
   STD−331E : For adjustment of playback system.
   STD−630 : NORMAL blank tape
5. Prepare the following measuring devices :
   AC millivoltmeter, Low-frequency oscillator, Attenuator, Oscilloscope
6. Adjust both L and R channels, unless specified otherwise.
7. Set the DOLBY NR switches to OFF (except XR−J11/SDXJ and YPWXJ) and MIC MIX to MIN.
8. Warm up the unit for several minutes before adjustment. Especially before adjusting the frequency characteristics of recording and playback, warm up for 3 to 5 minutes in REC/PLAY mode.
9. Make sure to follow the proper order of the adjustment procedure. Any change in the order may cause an improper result.

List of Adjustment

Deck I
1. Head Azimuth Adjustment
2. Playback Level Adjustment

Deck II
1. Head Azimuth Adjustment
2. Playback Level Adjustment
3. Recording Level and Bias Level Adjustment

Note :
As the reference recording level is 250nwb/m for STD−331E, the recording level will be higher by 4 dB for STD−331B (160nwb/m). When adjusting, pay carefull attention to the type of tape used.

Manufactured under license from Dolby Laboratories Licensing Corporation.
DOLBY and the double-D symbol are trademarks of Dolby Laboratories Licensing Corporation.

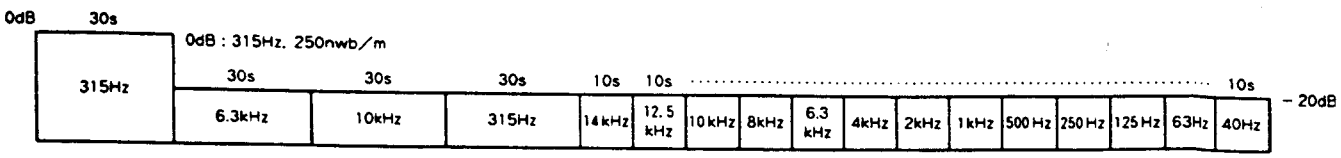

Fig. 3−1 Test tape STD−331E

www.manualscenter.com

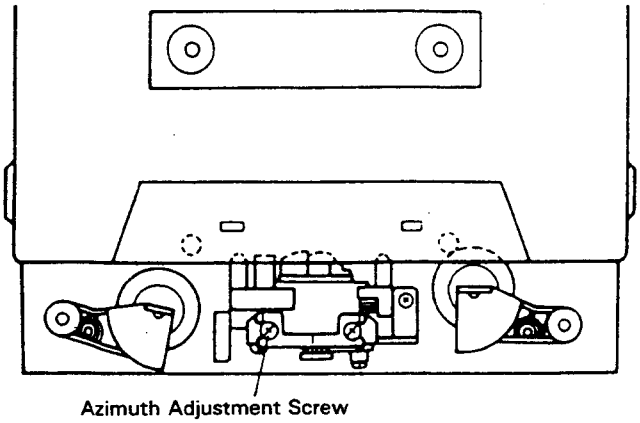

Fig. 3−2 Head Azimuth Adjustment

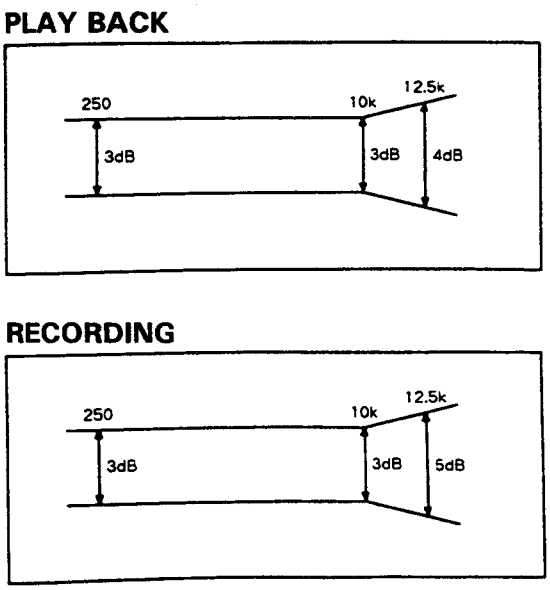

Fig. 3−3 Frequency Characteristics

■ Head Adjustment of Deck I and Deck II

1. Head Azimuth Adjustment

Procedure	Tape selector	Mode	Input signal/ Test tape	Deck	Adjustment location	Measuring location	Adjustment value	Remarks
1	NORM	PLAY	Playback the test tape STD−331E (10kHz, −20dB).	I II	Head azimuth adjustment screw (Fig. 3−2)	AF assy TP4401 TP4403	Adjust so that the signal level is at maximum and the phase difference is zero (0).	Lock the screw with screw lock after completing adjustment.

2. Playback Level Adjustment

● For XR−J11/SDXJ, YPWXJ, XR−J11M/SDXJ and YPWXJ

Procedure	Tape selector	Mode	Input signal/ Test tape	Deck	Adjustment location	Measuring location	Adjustment value	Remarks
1	NORM	PLAY	Playback the test tape STD−331E (315Hz, 0dB).	I II	Only checking	AF assy TP4401 (Lch) TP4403 (Rch)	−4.5dBV ±3dB	

● Except XR−J11/SDXJ, YPWXJ, XR−J11M/SDXJ and YPWXJ

Procedure	Tape selector	Mode	Input signal/ Test tape	Deck	Adjustment location	Measuring location	Adjustment value	Remarks
1	NORM	PLAY	Playback the test tape STD−331E (315Hz, 0dB).	I	AF assy VR4403 (Lch) VR4404 (Rch)	AF assy TP4401 (Lch) TP4403 (Rch)	−1.2dBV ±0.5dB	
				II	AF assy VR4401 (Lch) VR4402 (Rch)			

www.manualscenter.com

■ Head Adjustment of Deck II

3. Recording Level and Bias Level Adjustment

- For XR−J11/SDXJ, YPWXJ, XR−J11M/SDXJ and YPWXJ
- Before starting adjustment, turn VR4351 by 45 degrees counterclockwise from the mechanical center.

Procedure	Tape selector	Mode	Input signal/test tape	Adjustment location	Measuring location	Adjustment value	Remarks
1	NORM	REC PAUSE	Inputs 10kHz to input terminal. Set the function to CD. Set test tape STD−631.	Input signal level	AF assy TP4401 (Lch) TP4403 (Rch)	Set the input signal to be −25.2dBV.	
2		REC/ PLAY	Record and playback the test tape STD−631.	AF assy VR4351		Repeat recording/playback until the playback level of 10kHz is −28.5dBV ±0.5dBV.	
3		REC PAUSE	Inputs 315Hz to the CD RCA input terminal. Set the function to CD. Set test tape STD−631.	Input signal level		Set the input signal to be −25.2dBV.	
4		REC/ PLAY	Record and playback the test tape STD−631.	AF assy VR4351		Repeat recording/playback until the playback level of 315Hz is −28.5dBV ±4dBV.	
5	For the Rch, confirm that both 10kHz and 315Hz are −28.5dBV±4dBV. If not within this standard, repeat Steps 1−4 above.						

- Except XR−J11/SDXJ, YPWXJ, XR−J11M/SDXJ and YPWXJ
- Before starting adjustment, turn VR4351 and VR4352 by 45 degrees counterclockwise from the mechanical center.

Procedure	Tape selector	Mode	Input signal/test tape	Adjustment location	Measuring location	Adjustment value	Remarks
1	NORM	REC PAUSE	Inputs 315Hz to the CD RCA input terminal. Set the function to CD. Set test tape STD−631.	Input signal level	AF assy TP4401 (Lch) TP4403 (Rch)	Set the input signal to be −25.2dBV.	
2		REC/ PLAY	Record and playback the test tape STD−631.	AF assy VR4301 (Lch) VR4302 (Rch)		Repeat recording/playback until the playback level of 315Hz is −25.2dBV ±0.5dBV.	
3		REC PAUSE	Inputs 10kHz to input terminal. Set the function to CD. Set test tape STD−631.	Input signal level		Set the input signal to be −25.2dBV.	
4		REC/ PLAY	Record and playback the test tape STD−631.	AF assy VR4351 (Lch) VR4352 (Rch)		Repeat recording/playback until the playback level of 10kHz is −25.2dBV ±0.5dBV.	
5	Repeat Steps 1−4 until both 10kHz and 315Hz satisfy the standard.						
6	Adjust VR4302 for the Rch also, following the procedure in Steps 1−5 above.						

www.manualscenter.com

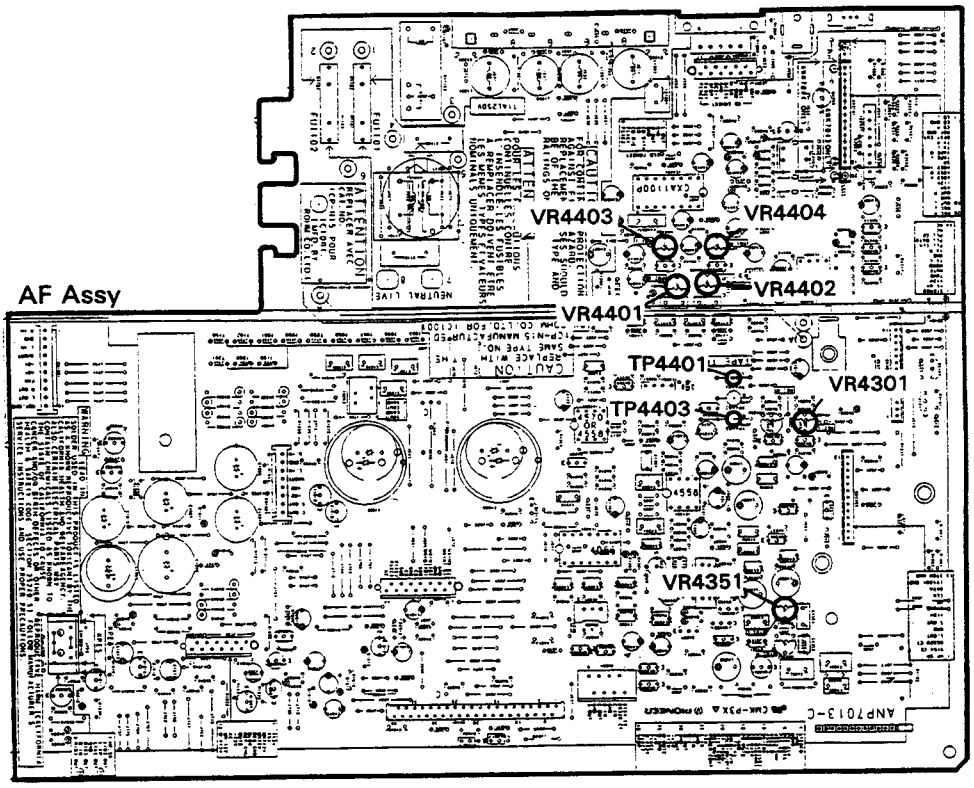

www.manualscenter.com

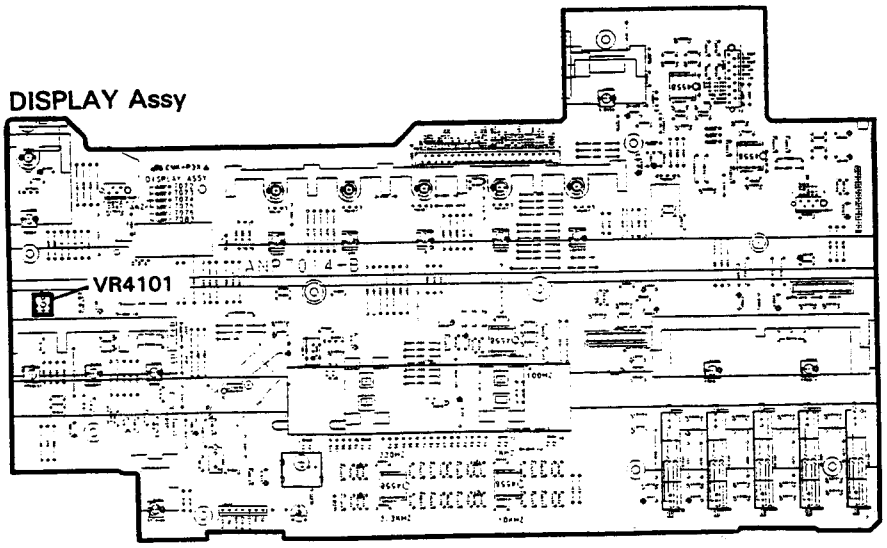

Fig. 3–4 Adjustment Points

1.4.4 CD SECTION (FOR CD MULTI AND CD SINGLE)

■ Adjustment Methods

If a disc player is adjusted incorrectly or inadequately, it may malfunction or not work at all even though there is nothing at all wrong with the pickup or the circuitry. Adjust correctly following the adjustment procedure.

● Adjustment Items/Verification Items and Order

If the specified values cannot be obtained or no adjustment is possible by performing the verifications or adjustments described in steps 1−4, the pickup block may be defective.

Step	Item	Test Point	Adjustment Location
1	Focus offset verification	TP1, Pin6 (FCS. ERR)	None
2	Tracking error balance verification	TP1, Pin2 (TRK. ERR)	None
3	Pickup radial/tangential direction tilt adjustment	TP1, Pin1 (RF)	Radial tilt adjustment screw, Tangential tilt adjustment screw
4	RF level verification	TP1, Pin1 (RF)	None
5	Focus servo loop gain adjustment	TP1, Pin5 (FCS. IN) TP1, Pin6 (FCS. ERR)	VR152 (FCS. GAN)
6	Tracking servo loop gain adjustment	TP1, Pin3 (TRK. IN) TP1, Pin2 (TRK. ERR)	VR151 (TRK. GAN)

● Abbreviation Table

FCS. ERR : Focus Error
TRK. ERR : Tracking Error
FCS. GAN : Focus Gain
TRK. GAN : Tracking Gain
FCS. IN : Focus In
TRK. IN : Tracking In

● Measuring Instruments and Tools

1. Dual trace oscilloscope (10 : 1 probe)
2. Low-frequency oscillator
3. Test disc (YEDS−7)
4. Low pass filter (39kΩ + 0.001μF)
5. Resistor (100kΩ)
6. 8cm disc (With at least about 20 minutes of recording)
7. Ball point hexagon wrench (GGK1002)
8. Standard tools

www.manualscenter.com

● Test Point and Adjustment Variable Resistor Positions

MOTHER PCB assy

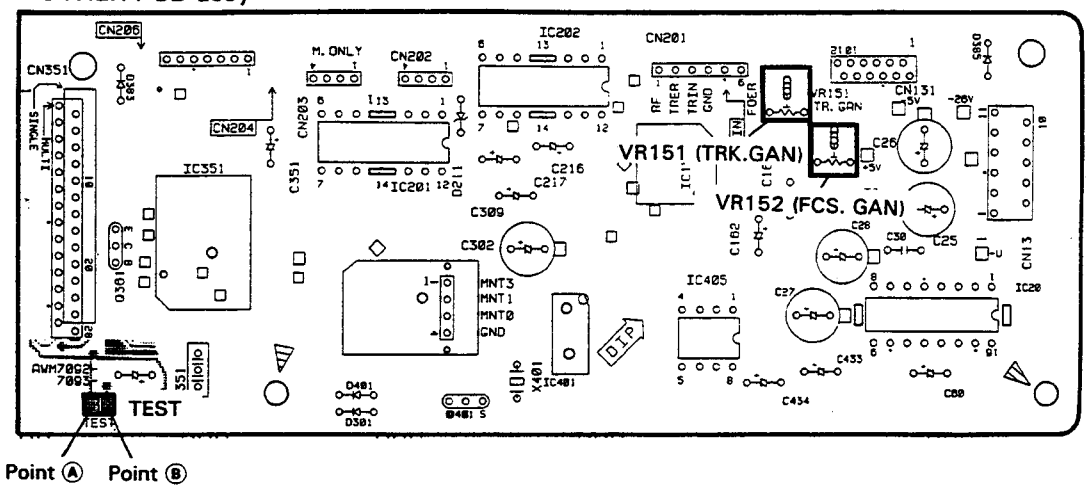

Fig. 1 Adjustment Location

● Notes

1. Use a 10 : 1 probe for the oscilloscope.
2. All the knob positions (settings) for the oscilloscope in the adjustment procedures are for when a 10 : 1 probe is used.

● Test Mode

These models have a test mode so that the adjustment and checks required for service can be carried out easily. When these models are in test mode, the keys on the front panel work differently from normal. Adjustments and checks can be carried out by operating these keys with the correct procedure. For these models, all adjustments are carried out in test mode.

[Setting these models to test mode]

How to set this model into test mode.

1. Turn off the power switch of DECK AMP.
2. Connect the point Ⓐ to Ⓑ. (See Fig. 1)
3. Turn on the power switch of DECK AMP.

When the test mode is set correctly, the display is different from what it usually is when the power is turned on. If the display is still the same as usual, test mode has not been set correctly, so repeat Steps 1−3.

www.manualscenter.com

[Release from test mode]

Here is the procedure for releasing the test mode:
1. Press the STOP key and stop all operations.
2. Turn off the power switch of DECK AMP.

[Operations of the keys in test mode]

Code	Key Name	Function in Test Mode	Explanation
	PROGRAM	Focus servo close	The laser diode is lit up and the focus actuator is lifted up, then lowered slowly and the focus servo is closed at the point where the objective lens is focused on the disc. With the player in this state, if you lightly rotate the stopped disc by hand, you can hear the sound the focus servo. If you can hear this sound, the focus servo is operating correctly. If you press this key with no disc mounted, the laser diode lights up, the focus actuator is pulled up, then the actuator is lowered and raised three times and returned to its original position.
▶/II	PLAY/PAUSE	Spindle servo ON	Starts the spindle motor in the clockwise direction and when the disc rotation reaches the prescribed speed (about 500rpm at the inner periphery), sets the spindle servo in a closed loop. Be careful. Pressing this key when there is no disc mounted makes the spindle motor run at the maximum speed. If the focus servo does not go correctly into a closed loop or the laser light shines on the mirror section at the outermost periphery of the disc, the same symptom is occurred.
		Tracking servo close/open	Pressing this key when the focus servo and spindle servo are operating correctly in closed loops puts the tracking servo into a closed loop, displays the track number being played back and the elapsed time on the front panel, and outputs the playback signal. If the elapsed time is not displayed or not counted correctly or the audio is not played back correctly, it may be that the laser is shining on the section with no sound recorded at the outer edge of the disc, that something is out of adjustment, or that there is some other problem. This key is a toggle key and open/close the tracking servo alternately. This key has no effect if no disc is mounted.

www.manualscenter.com

Code	Key Name	Function in Test Mode	Explanation
⏮ • ◀◀	MANUAL/ TRACK SEARCH REV	Carriage reverse (inwards)	Moves the pickup position toward the inner diameter of the disc. When this key is pressed with the tracking servo in a closed loop, the tracking servo automatically goes into an open loop. Since the motor does not automatically stop at the mechanical end point in test mode, be careful with this operation.
▶▶⏭ • ▶▶	MANUAL/ TRACK SEARCH FWD	Carriage forward (outwards)	Moves the pickup position toward the outer diameter of the disc. When this key is pressed with the tracking servo in a closed loop, the tracking servo automatically goes into an open loop. Since the motor does not automatically stop at the mechanical end point in test mode, be careful with this operation.
■	STOP	Stop	Initializes and the disc rotation stops. The pickup and disc remain where they are when this key is pressed.
⏏	EJECT	CD magazine eject (For CD Multi)	Stores Disc 1 in the CD magazine, then ejects the CD magazine. However, even though the CD magazine is ejected, the pickup does not return to the park position. Even if the CD magazine is mounted again, the pickup remains where it is.
⏏	OPEN/CLOSE	Disc tray open/close (For CD Single)	Open/close the disc tray. This key is a toggle key and open/close tray altenately. Pressing this key when the disc is turning stops the disc, then opens the tray. This key operation does not affect the position of the pickup.

Note: When inserting the magazine, disc 1 of the magazine is loaded automatically.

[How to playback a disc in test mode]

In test mode, since the servos operate independently, playing back a disc requires that you operate the keys in the correct order to close the servos.
Here is the key operation sequence for playing back a disc in test mode.

PROGRAM	Lights up the laser diode and closes the focus servo.
⇩	
PLAY/PAUSE ▶/II	Starts the spindle motor and closes the spindle servo.
⇩	
PLAY/PAUSE ▶/II	Closes the tracking servo.

Wait at least 2–3 seconds between each of these operations.

www.manualscenter.com

Focus Offset Verification

● Objective	Verify the DC offset for the focus error amp.		
● Symptom when out of adjustment	The model does not focus in and the RF signal is dirty.		
● Measurement Instrument Connections	Connect the oscilloscope to TP1, Pin6 (FCS. ERR) [Settings] 5mV/division 10ms/division DC mode	● Player State ● Adjustment Location ● Disc	Test mode, stopped (just the Power switch on) None None needed
[Procedure] Verify the DC voltage at TP1, Pin6 (FCS. ERR) is 0±50mV.			

Note: If the specified values cannot be obtained or no adjustment is possible by performing the verifications or adjustments described in adjustment items 1–4, the pickup block may be defective.

Tracking Error Balance Verification

● Objective	To verify that there is no variation in the sensitivity of the tracking photo diode.		
● Symptom when out of adjustment	Play does not start or track search is impossible.		
● Measurement Instrument Connections	Connect the oscilloscope to TP1, Pin2 (TRK. ERR). This connection may be via a low pass filter. [Settings] 50mV/division 5ms/division DC mode	● Player State ● Adjustment Location ● Disc	Test mode, focus and spindle servos closed and tracking servo open. None YEDS–7

[Procedure]

1. Move the pickup to midway across the disc (R=35mm) with the MANUAL/TRACK SEARCH FWD ▶▶ • ▶▶▮ key or REV ▮◀◀ • ◀◀ key.
2. Press the PGM (PROGRAM) key, then the PLAY/PAUSE ▶/▮▮ key in that order to close the focus servo then the spindle servo.
3. Line up the bright line (ground) at the center of the oscilloscope screen and put the oscilloscope into DC mode.
4. Supposing that the positive amplitude of the tracking error signal at TP1, pin2 (TRK. ERR) is (A) and the negative amplitude is (B), the following expression is satisfied.

When $A \geqq B$, $\frac{A-B}{C} \times \frac{1}{2} \leqq 0.1$

When $A < B$, $\frac{B-A}{C} \times \frac{1}{2} \leqq 0.1$

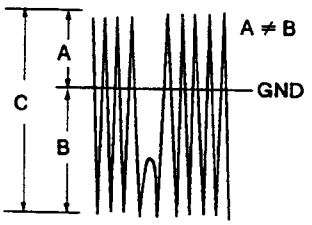

When there is a DC component

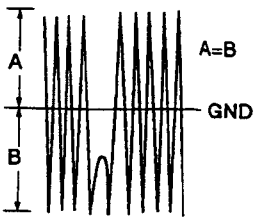

When there is no DC component

www.manualscenter.com

■ Pickup Radial/Tangential Tilt Adjustment (CD Multi for XR−J22M and XR−J11M)

● Objective	To adjust the angle of the pickup relative to the disc so that the laser beams are shone straight down into the disc for the best read out of the RF signals.		
● Symptom when out of adjustment	Sound broken; some discs can be played but not others.		
● Measurement Instrument Connections	Connect the oscilloscope to TP1, Pin1 (RF). [Settings] 20mV/division 200ns/division AC mode	● Player State ● Adjustment Location ● Disc	Test mode, play Pickup radial tilt adjustment screw and tangential tilt adjustment screw YEDS−7

[Procedure]

1. Press the MANUAL/TRACK SEARCH FWD ▶▶ • ▶▶▌ key or REV ▌◀◀ • ◀◀ key to move the pickup to halfway across the disc (R=35mm).
   Press the PGM (PROGRAM) key, the PLAY/PAUSE ▶/▌▌ key twice in that order to close the respective servos and put the player into play mode.
2. First, adjust the radial tilt adjustment screw with a Phillips screwdriver so that the eye pattern (the diamond shape at the center of the RF signal) can be seen the most clearly.
3. Next, adjust the tangential tilt adjustment screw with a Phillips screwdriver so that the eye pattern (the diamond shape at the center of the RF signal) can be seen the most clearly (Fig. 3).
4. Adjust the radial tilt adjustment screw and the tangential tilt adjustment screw again so that the eye pattern can be seen the most clearly. As necessary, adjust the two screws alternately so that the eye pattern can be seen the most clearly.
5. When the adjustment is completed, lock the radial and tangential adjustment screw.

Note: Radial and tangential mean the directions relative to the disc shown in Fig. 2.

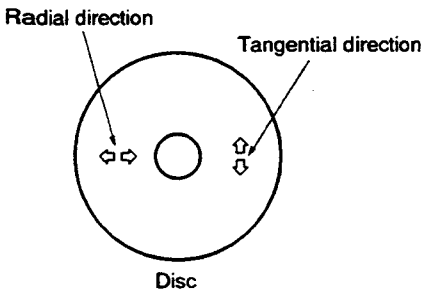

Fig. 2

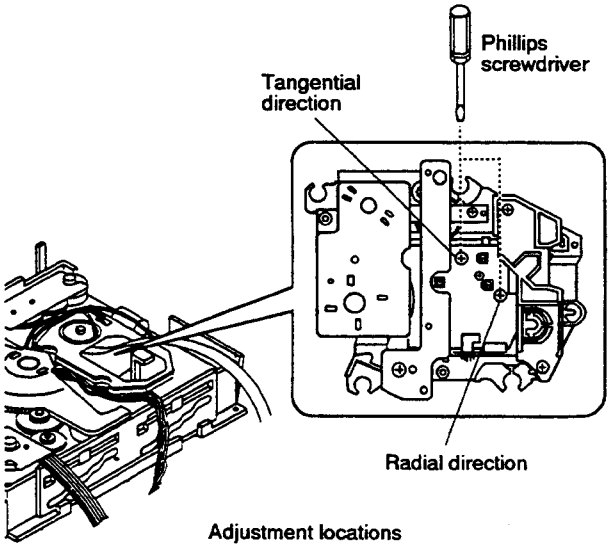

www.manualscenter.com

■ Pickup Radial/Tangential Tilt Adjustment (CD Single for XR−J22 and XR−J11)

● Objective	To adjust the angle of the pickup relative to the disc so that the laser beams are shone straight down into the disc for the best read out of the RF signals.		
● Symptom when out of adjustment	Sound broken; some discs can be played but not others.		
● Measurement Instrument Connections	Connect the oscilloscope to TP1, Pin1 (RF). [Settings] 20mV/division 200ns/division AC mode	● Player State ● Adjustment Location ● Disc	Test mode, play Pickup radial tilt adjustment screw and tangential tilt adjustment screw 8 cm disc [Hewever, those with approx. 20 min of audio signal (music).]

[Procedure]

1. Press the MANUAL/TRACK SEARCH FWD ▶▶ • ▶▶▮ key or REV ▮◀◀ • ◀◀ key to move the pickup to the external circumference of the disc.
   Press the PGM (PROGRAM) key, the PLAY/PAUSE ▶/▮▮ key twice in that order to close the respective servos and put the player into play mode.
2. First, adjust the radial tilt adjustment screw with the hexagon wrench (GGK1002) so that the eye pattern (the diamond shape at the center of the RF signal) can be seen the most clearly.
3. Next, adjust the tangential tilt adjustment screw with the hexagon wrench (GGK1002) so that the eye pattern (the diamond shape at the center of the RF signal) can be seen the most clearly (Fig. 3).
   ※ The ball-point type hexagonal wrench is used because the disc will get in the way if a normal hexagonal wrench is used.
4. Adjust the radial tilt adjustment screw and the tangential tilt adjustment screw again so that the eye pattern can be seen the most clearly. As necessary, adjust the two screws alternately so that the eye pattern can be seen the most clearly.
5. When the adjustment is completed, lock the radial and tangential adjustment screw.

Note: Radial and tangential mean the directions relative to the disc shown in Fig. 2.

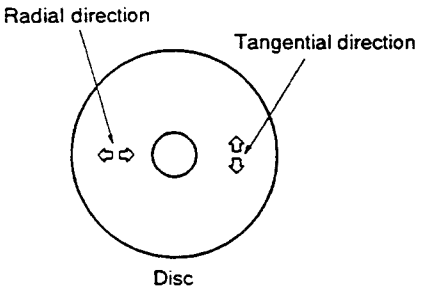

Fig. 2

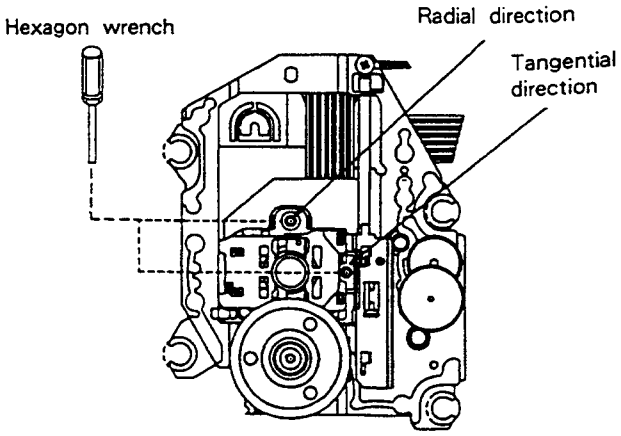

www.manualscenter.com

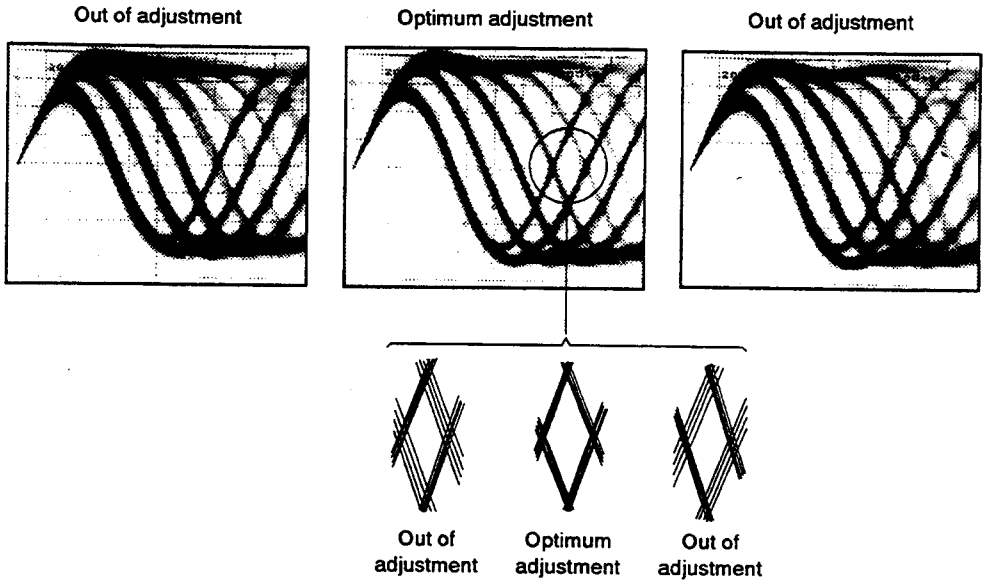

Fig. 3 Eye Pattern

■ RF Level Verification

● Objective ● Symptom when out of adjustment	To verify the playback RF signal amplitude. No play or no search		
● Measurement Instrument Connections	Connect the oscilloscope to TP1, Pin1 (RF). [Settings] 50mV／division 10ms／division AC mode	● Player State ● Adjustment Location ● Disc	Test mode, play None YEDS−7

[Procedure]

1. Move the pickup to midway across the disc (R=35mm) with the MANUAL／TRACK SEARCH FWD ▶▶ • ▶▶▌ key or REV ▌◀◀ • ◀◀ key, then press the PGM (PROGRAM) key, the PLAY／PAUSE ▶／▌▌ key twice in that order to close the respective servos and put the player into play mode.
2. Verify the RF signal amplitude is 1.2Vp−p±0.2V̆.

www.manualscenter.com

Focus Servo Loop Gain Adjustment

● Objective	To optimize the focus servo loop gain.		
● Symptom when out of adjustment	Playback does not start or focus actuator noisy.		
● Measurement Instrument Connections	See Fig. 4. [Settings] CH1 20mV/division X−Y mode CH2 5mV/division	● Player State ● Adjustment Location ● Disc	Test mode, play VR152 (FCS. GAN) YEDS−7

[Procedure]

1. Set the AF generator output to 1.2kHz and 1Vp−p.
2. Press the MANUAL/TRACK SEARCH FWD ▶▶ • ▶▶▮ key or REV ▮◀◀ • ◀◀ key to move the pickup to halfway across the disc (R=35mm), then press the PGM (PROGRAM) key, the PLAY/PAUSE ▶/▮▮ key twice in that order to close the corresponding servos and put the player into play mode.
3. Adjust VR8152 (FCS. GAN) so that the Lissajous waveform is symmetrical about the X axis and the Y axis.

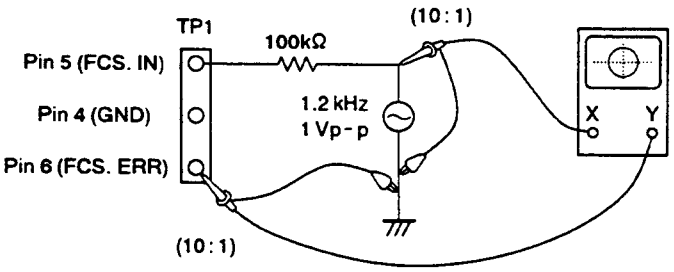

Fig. 4

Focus Gain Adjustment

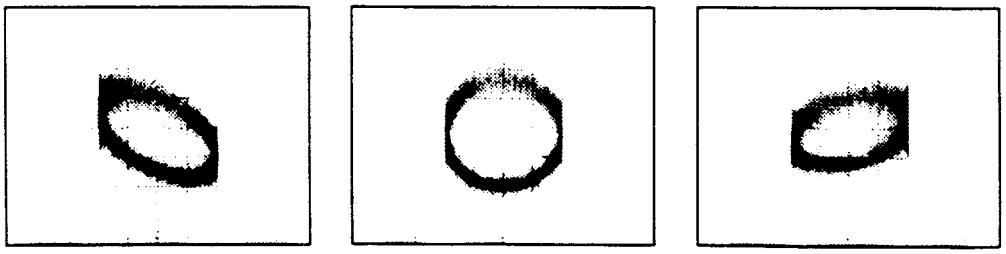

Higher gain | Optimum gain | Lower gain

www.manualscenter.com

■ Tracking Servo Loop Gain Adjustment

● Objective	To optimize the tracking servo loop gain.		
● Symptom when out of adjustment	Playback does not start, during searches the actuator is noisy, or tracks are skipped.		
● Measurement Instrument Connections	See Fig. 5. [Settings] CH1 50mV／division X－Y mode CH2 20mV／division	● Player State ● Adjustment Location ● Disc	Test mode, play VR151 (TRK. GAN) YEDS－7

[Procedure]

1. Set the AF generator output to 1.2kHz and 2Vp－p.
2. Press the MANUAL／TRACK SEARCH FWD ▶▶ • ▶▶▌ key or REV ▌◀◀ • ◀◀ key to move the pickup to halfway across the disc (R＝35mm), then press the PGM (PROGRAM) key, the PLAY／PAUSE ▶／▌▌ key twice in that order to close the corresponding servos and put the player into play mode.
3. Adjust VR8151 (TRK GAN) so that the Lissajous waveform is symmetrical about the X axis and the Y axis.

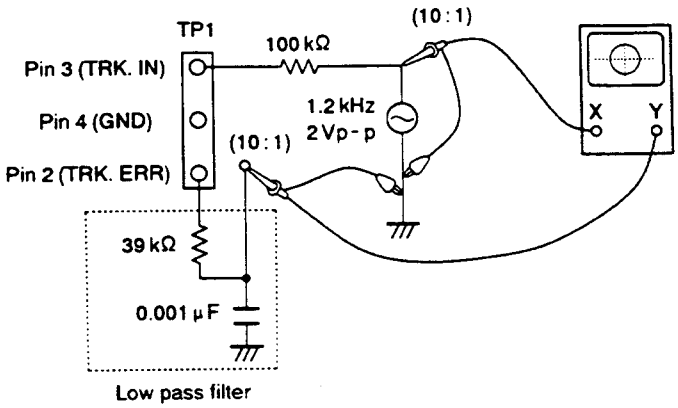

Fig. 5

Tracking Gain Adjustment

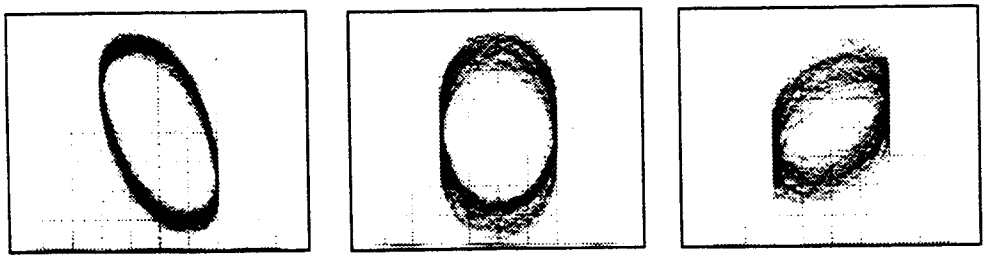

Higher gain　　Optimum gain　　Lower gain

www.manualscenter.com

1.5 PARTS LIST FOR PACKING AND EXPLODED VIEWS

NOTES :

- *Parts marked by "NSP" are generally unavailable because they are not in our Master Spare Parts List.*
- *The ⚠ mark found on some component parts indicates the importance of the safety factor of the part. Therefore, when replacing, be sure to use parts of identical designation.*
- *Parts marked by "◉" are not always kept in stock. Their delivery time may be longer than usual or they may be unavailable.*

1.5.1 PACKING

■ FOR XR−J22M

● PART NUMBER DIFFERENCES BETWEEN XR−J22M/SDXJ AND YPWXJ

Part number differs between XR−J22M/SDXJ and YPWXJ.

Mark	No.	Description	Part No. XR−J22M SDXJ	Part No. XR−J22M YPWXJ	Remarks
	5	Operating instructions (Spanish/Chinese)	ARC7013	Not used	
NSP	7	Caution (220V)	ARR−003	Not used	
	11	Packing case	AHD7027	AHD7028	
NSP	14	Warranty card	Not used	ARY1067	

● For XR−J22M/SDXJ

Mark	No.	Description	Parts No.
	1	Remote control unit	AXD7010
NSP	2	Battery (R6P)	AEX−010
NSP	3	Poly. bag	AHG1105
	4	Front pad	AHA7014
	5	Operating instructions (ENGLISH)	ARB7009
	6	Operating instructions (Spanish/Chinese)	ARC7013
NSP	7	Caution (220V)	ARR−003
	8	FM Antenna	ADH1017
	9	Loop antenna ASSY	ATB1009
	10	Rear pad	AHA7015
	11	Packing case	AHD7027
NSP	12	Sheet	AHG7002
	13	Magazine ASSY	PXA1523
	14	.....	
	15	Battery cover	AZA7028

www.manualscenter.com

■ FOR XR−J11M

● PART NUMBER DIFFERENCES BETWEEN XR−J11M/SDXJ, YPWXJ, KUXJ AND KCXJ

Part number differs between XR−P11M/SDXJ, YPWXJ, KUXJ and KCXJ.

Mark	No.	Description	Part No.				Remarks
			XR−J11M				
			SDXJ	YPWXJ	KUXJ	KCXJ	
	5	Operating instructions (Spanish/Chinese)	ARC7013	Not used	Not used	Not used	
	6	Operating instructions (French)	Not used	Not used	Not used	ARC7014	
NSP	7	Caution (220V)	ARR−003	Not used	Not used	Not used	
	11	Packing case	AHD7022	AHD7023	AHD7024	AHD7024	
NSP	14	Warranty card	Not used	ARY1067	ARY1051	ARY1039	

● For XR−J11M/SDXJ

Mark	No.	Description	Parts No.
	1	Remote control unit	AXD7010
NSP	2	Battery (R6P)	AEX−010
NSP	3	Poly. bag	AHG1105
	4	Front pad	AHA7014
	5	Operating instructions (ENGLISH)	ARB7009
	6	Operating instructions (Spanish/Chinese)	ARC7013
NSP	7	Caution (220V)	ARR−003
	8	FM Antenna	ADH1017
	9	Loop antenna ASSY	ATB1009
	10	Rear pad	AHA7015
	11	Packing case	AHD7022
NSP	12	Sheet	AHG7002
	13	Magazine ASSY	PXA1523
	14	.....	
	15	Battery cover	AZA7028

www.manualscenter.com

■ FOR XR−J22

● PART NUMBER DIFFERENCES BETWEEN XR−J22/SDXJ, YPWXJ, HBXJ, HEXJ AND HEWZIXJ

Part number differs between XR−J22/SDXJ, YPWXJ, HBXJ, HEXJ and HEWZIXJ.

Mark	No.	Description	Part No.					Remarks
			XR−J22					
			SDXJ	YPWXJ	HBXJ	HEXJ	HEWZIXJ	
	5	Operating instructions (ENGLISH)	ARB7008	ARB7008	ARB7008	Not used	Not used	
	6	Operating instructions (Spanish/Chinese)	ARC7010	Not used	Not used	Not used	Not used	
	5	Operating instructions (*)	Not used	Not used	Not used	ARE7012	Not used	
	6	Operating instructions (**)	Not used	Not used	Not used	ARC7011	Not used	
	5	Operating instructions (German/Italian)	Not used	Not used	Not used	Not used	ARC7012	
NSP	7	Caution (220V)	ARR−003	Not used	ARM1003	Not used	Not used	
	11	Packing case	AHD7025	AHD7026	AHD7053	AHD7053	AHD7053	
NSP	14	Warranty card	Not used	ARY1067	ARW−088	ARW−088	ARW−088	
	8	FM Antenna	ADH1017	ADH1017	ADH1017	ADH1017	ADH1019	

*: English/German /French/Italian

**: Spanish/Swedish/Dutch/Portuguese

● For XR−J22/SDXJ

Mark	No.	Description	Parts No.
	1	Remote control unit	AXD7010
NSP	2	Battery (R6P)	AEX−010
NSP	3	Poly. bag	AHG1105
	4	Front pad	AHA7014
	5	Operating instructions (ENGLISH)	ARB7008
	6	Operating instructions (Spanish/Chinese)	ARC7010
NSP	7	Caution (220V)	ARR−003
	8	FM Antenna	ADH1017
	9	Loop antenna	ATB1009
	10	Rear pad	AHA7015
	11	Packing case	AHD7025
NSP	12	Sheet	AHG7002
	13	.....	
	14	.....	
	15	Battery cover	AZA7028

www.manualscenter.com

■ FOR XR−J11

● PART NUMBER DIFFERENCES BETWEEN XR−J11/SDXJ, YPWXJ, HBXJ, HEXJ AND HEWZIXJ

Part number differs between XR−J11/SDXJ, YPWXJ, HBXJ, HEXJ and HEWZIXJ.

Mark	No.	Description	Part No.					Remarks
			XR−J11					
			SDXJ	YPWXJ	HBXJ	HEXJ	HEWZIXJ	
	5	Operating instructions (ENGLISH)	ARB7008	ARB7008	ARB7008	Not used	Not used	
	6	Operating instructions (Spanish/Chinese)	ARC7010	ARC7010	Not used	Not used	Not used	
	5	Operating instructions (*)	Not used	Not used	Not used	ARE7012	Not used	
	6	Operating instructions (**)	Not used	Not used	Not used	ARC7011	Not used	
	5	Operating instructions (German/Italian)	Not used	Not used	Not used	Not used	ARC7012	
NSP	7	Caution (220V)	ARR−003	Not used	ARM1003	Not used	Not used	
	11	Packing case	AHD7020	AHD7021	AHD7052	AHD7052	AHD7052	
NSP	14	Warranty card	Not used	ARY1067	ARW1048	ARW1048	ARW1048	
	8	FM antenna	ADH1017	ADH1017	ADH1008	ADH1017	ADH1019	

*: English/German /French/Italian
**: Spanish/Swedish/Dutch/Portuguese

● For XR−J11/SDXJ

Mark	No.	Description	Parts No.
	1	Remote control unit	AXD7010
NSP	2	Battery (R6P)	AEX−010
NSP	3	Poly. bag	AHG1105
	4	Front pad	AHA7014
	5	Operating instructions (ENGLISH)	ARB7008
	6	Operating instructions (Spanish/Chinese)	ARC7010
NSP	7	Caution (220V)	ARR−003
	8	FM Antenna	ADH1017
	9	Loop antenna ASSY	ATB1009
	10	Rear pad	AHA7015
	11	Packing case	AHD7020
NSP	12	Sheet	AHG7002
	13	.....	
	14	.....	
	15	Battery cover	AZA7028

www.manualscenter.com

1.5.2 EXTERIOR

■ FOR XR−J22M

● PART NUMBER DIFFERENCES BETWEEN XR−J22M/SDXJ AND YPWXJ

Part number differs between XR−J22M/SDXJ and YPWXJ.

Mark	No.	Description	Part No. XR−J22M SDXJ	Part No. XR−J22M YPWXJ	Remarks
	62	Rear panel	ANC7082	ANC7083	
⚠	67	Voltage selector	AKX−507	Not used	
NSP	68	AF ASSY	AWZ7059	AWZ7060	
⚠	75	AC Power cord	ADG1051	ADG1123	
⚠	73	Fuse (FU1102: T1A)	AEK−508	Not used	
NSP	97	Name label	AAL7042	AAL7043	
NSP	98	Manufactured label	AAX−372	Not used	
NSP	100	Caution label (F)	Not used	ARW1021	
NSP	99	Caution label	Not used	ARW1023	

● For XR−J22M/SDXJ

Mark	No.	Description	Parts No.
	1	.....	
	2	.....	
	3	Function panel	AMB7052
	4	Display window	AAK7047
	5	Door	AAK7049
	6	Door spring	ABH7005
	7	Function button	AAD7033
	8	Mode button	AAD7034
	9	.....	
	10	.....	
	11	Flexible cable (23P FFC)	PDD1058
NSP	12	Under base	PNA1832
	13	Supporting feet	AXA7010
NSP	14	PCB support	AEC7006
	15	Multi CD Mother PCB ASSY	AWM7093
	16	.....	
	17	.....	
NSP	18	Multi mech. ASSY	PXA1469
	19	.....	
NSP	20	Earth lead Unit	XDF−503
	21	.....	
	22	Cassette door (L)	AAN7010
	23	Cassette door (R)	AAN7011
	24	Door panel L	AAK7036
	25	Door panel R	AAK7037
	26	Keep plate	ABK1017
	27	Spring	ABH1078
	28	Keep plate	ABK1017
	29	Spring	ABH1078
	30	Front panel	AMB7042
	31	GEQ. panel	AAK7035
	32	Amp. panel	AAK7032
	33	Stand by lenz	AAK7040
	34	Power button	AAD7022
	35	.....	
	36	Dolby button	AAD7017
	37	S. bass button	AAD7021
	38	Band button	AAD7020
	39	Tuning buton	AAD7019
	40	ST. wide button	AAD7023
	41	Function button	AAD7018
	42	Deck knob A	AAE7000
	43	Deck knob B	AAE7001
	44	Deck knob C	AAE7002
	45	Deck knob D	AAE7003
	46	Deck knob E	AAE7004
	47	Deck knob F	AAE7005
NSP	48	Deck knob holder	ANG7008
	49	Damper ASSY	AXA1008
NSP	50	Display ASSY	AWZ7317
	51	Flexible flat cable	ADD1112
NSP	52	Head phone ASSY	AWZ7070
NSP	53	Tape IND. ASSY	AWZ7079
NSP	54	MIC assy	AWZ7080
	55	Jack holder	ANG7007
	56	Cassette mech. unit	AWY1174
	57	Connecting holder R	ANG7006
	58	Connecting holder L	ANG7005
	59	.....	
	60	Volume ASSY	AWZ7316

www.manualscenter.com

Mark	No.	Description	Parts No.
	61	.....	
	62	Rear panel	ANC7082
⚠	63	Power transformer	ATS7017
	64	.....	
NSP	65	Assembly holder L	ANG7003
NSP	66	Assembly holder R	ANG7004
⚠	67	Voltage selector	AKX−507
	68	AF ASSY	AWZ7059
	69	FUNCTION assy	AWZ7062
	70	FM/AM Tuner module	AXQ3112
	71	.....	
⚠	72	Fuse (FU1101: T1A)	AEK−508
⚠	73	Fuse (FU1102: T1A)	AEK−508
	74	SECONDARY assy	AWZ7064
⚠	75	AC power cord	ADG1051
⚠	76	AC cord stopper	AEC−882
	77	Power module	AXQ3118
	78	Mixing knob	AAB7017
	79	Vol knob	AAB7012
	80	PIONEER budge	AAM1047
	81	Bonnet case	ANE7012
	82	.....	
	83	Screw	BPZ30P080FMC
	84	Screw	BBZ30P060FMC
	85	Screw	BBZ30P160FMC
	86	Screw	BBZ30P060FMC
	87	Screw	BBZ30P080FMC
	88	Screw	BPZ30P120FMC
	89	Screw	BBZ30P080FMC
	90	Screw	BPZ26P080FMC
	91	Screw	BPZ30P080FMC
	92	Screw	BBZ30P080FZK
	93	Screw	ASZ30P060FZK
	94	Screw	ABA1095
	95	Screw	BBZ30P060FMC
	96	Screw	BPZ26P080FMC
NSP	97	Name label	AAL7042
NSP	98	Manufactured label	AAX−372
	99	.....	
	100	.....	
	101	Function PCB ASSY 1	AWZ7216
	102	Function PCB ASSY 2	AWZ7217

www.manualscenter.com

■ FOR XR−J11M

● PART NUMBER DIFFERENCES BETWEEN XR−J11M/SDXJ, YPWXJ, KUXJ AND KCXJ

Part number differs between XR−J11M/SDXJ, YPWXJ, KUXJ and KCXJ.

Mark	No.	Description	Part No.				Remarks
			XR−J11M				
			SDXJ	YPWXJ	KUXJ	KCXJ	
	30	Front panel	AMB7037	AMB7038	AMB7039	AMB7039	
	35	P. bass lens	Not used	Not used	AAK2243	AAK2243	
	36	Dolby button	Not used	Not used	AAD7017	AAD7017	
NSP	50	Display ASSY	AWZ7072	AWZ7072	AWZ7074	AWZ7074	
NSP	71	Fuse card	AAX1587	AAX1587	AAX1180	AAX1180	
NSP	52	Head phone ASSY	AWZ7070	AWZ7070	AWZ7210	AWZ7210	
NSP	53	TAPE IND. ASSY	Not used	Not used	AWZ7079	AWZ7079	
	60	Volume ASSY	AWZ7077	AWZ7077	AWZ7082	AWZ7082	
	62	Rear panel	ANC7072	ANC7073	ANC7075	ANC7075	
⚠	63	Power transformer	ATS7017	ATS7017	Not used	Not used	
⚠	63	Power transformer	Not used	Not used	ATS7018	ATS7018	
NSP	61	Trans holder	Not used	Not used	ANA7007	ANA7007	
NSP	68	AF ASSY	AWZ7055	AWZ7260	AWZ7058	AWZ7058	
	77	Power module	AXQ3118	AXQ3118	AXQ3117	AXQ3117	
	4	Display window	AAK7047	AAK7047	AAK7056	AAK7056	
⚠	75	AC Power cord	ADG1051	ADG1123	PDG1015	PDG1015	
⚠	73	Fuse (FU1102: T1.25A)	AEK−508	Not used	Not used	Not used	
⚠	67	Voltage selector	AKX−507	Not used	Not used	Not used	
⚠	76	AC cord stopper	AEC−882	AEC−882	AEP−113	AEP−113	
⚠	72	Fuse (FU1101: T1A)	AEK−508	AEK−508	Not used	Not used	
⚠	72	Fuse (FU1101: 6.3A)	Not used	Not used	AEK−309	AEK−309	
	31	GEQ. panel	AAK7034	AAK7034	AAK7039	AAK7039	
NSP	97	Name label	AAL7033	AAL7034	Not used	Not used	
NSP	98	Manufactured label	AAX−372	Not used	AAX−372	AAX−372	
NSP	100	Caution label (F)	Not used	ARW1021	Not used	Not used	
NSP	99	Caution label	Not used	ARW1023	Not used	Not used	

www.manualscenter.com

● For XR−J11M/SDXJ

Mark	No.	Description	Parts No.
	1	.....	
	2	.....	
	3	Function panel	AMB7052
	4	Display window	AAK7047
	5	Door	AAK7049
	6	Door spring	ABH7005
	7	Function button	AAD7033
	8	Mode button	AAD7034
	9	.....	
	10	.....	
	11	Flexible cable (23P FFC)	PDD1058
NSP	12	Under base	PNA1832
	13	Supporting feet	AXA7010
NSP	14	PCB support	AEC7006
	15	Multi CD Mother PCB ASSY	AWM7093
	16	.....	
	17	.....	
NSP	18	Multi mech. ASSY	PXA1469
	19	.....	
NSP	20	Earth lead Unit	XDF−503
	21	.....	
	22	Cassette door (L)	AAN7010
	23	Cassette door (R)	AAN7011
	24	Door panel L	AAK7036
	25	Door panel R	AAK7037
	26	Keep plate	ABK1017
	27	Spring	ABH1078
	28	Keep plate	ABK1017
	29	Spring	ABH1078
	30	Front panel	AMB7037
	31	GEQ. panel	AAK7034
	32	AMP. panel	AAK7032
	33	Stand by lenz	AAK7040
	34	Power button	AAD7022
	35	.....	
	36	.....	
	37	S. bass button	AAD7021
	38	Band button	AAD7020
	39	Tuning buton	AAD7019
	40	.....	
	41	Function button	AAD7018
	42	Deck knob A	AAE7000
	43	Deck knob B	AAE7001
	44	Deck knob C	AAE7002
	45	Deck knob D	AAE7003
	46	Deck knob E	AAE7004
	47	Deck knob F	AAE7005
	48	Deck knob holder	ANG7008
	49	Damper ASSY	AXA1008
NSP	50	Display ASSY	AWZ7072

Mark	No.	Description	Parts No.
	51	Flexible flat cable	ADD1112
NSP	52	Head phone ASSY	AWZ7070
	53	.....	
	54	.....	
	55	.....	
	56	Cassette mech. unit	AWY1174
	57	Connecting holder R	ANG7006
	58	Connecting holder L	ANG7005
	59	.....	
	60	Volume ASSY	AWZ7077
	61	.....	
	62	Rear panel	ANC7072
⚠	63	Power transformer (T1)	ATS7017
	64	.....	
NSP	65	Assembly holder L	ANG7003
NSP	66	Assembly holder R	ANG7004
⚠	67	Voltage selector	AKX−507
	68	AF ASSY	AWZ7055
	69	Function ASSY	AWZ7062
	70	FM/AM tuner module	AXQ3112
	71	.....	
⚠	72	Fuse (FU1101: T1A)	AEK−508
⚠	73	Fuse (FU1102: T1A)	AEK−508
	74	Secondary ASSY	AWZ7064
⚠	75	AC Power cord	ADG1051
⚠	76	AC Cord stopper	AEC−882
	77	Power module	AXQ3118
	78	.....	
	79	Vol knob	AAB7012
	80	PIONEER budge	AAM1047
	81	Bonnet case	ANE7012
	82	.....	
	83	Screw	BPZ30P080FMC
	84	Screw	BBZ30P060FMC
	85	Screw	BBZ30PL60FMC
	86	Screw	BBZ30P060FMC
	87	Screw	BBZ30P080FMC
	88	Screw	BPZ30PL20FMC
	89	Screw	BBZ30P080FMC
	90	Screw	BPZ26P080FMC
	91	Screw	BPZ30P080FMC
	92	Screw	BBZ30P080FZK
	93	Screw	ASZ30P060FZK
	94	Screw	ABA1095
	95	Screw	BBZ30P060FMC
	96	Screw	BPZ26P080FMC
NSP	97	Name label	AAL7033
NSP	98	Manufacture label	AAX−372
	99	.....	
	100	.....	
	101	Function PCB ASSY 1	AWZ7216
	102	Function PCB ASSY 2	AWZ7217

www.manualscenter.com

■ FOR XR−J22

● PART NUMBER DIFFERENCES BETWEEN XR−J22/SDXJ, YPWXJ, HBXJ, HEXJ AND HEWZIXJ

Part number differs between XR−J22/SDXJ, YPWXJ, HBXJ, HEXJ and HEWZIXJ.

Mark	No.	Description	Part No.					Remarks
			XR−J22					
			SDXJ	YPWXJ	HBXJ	HEXJ	HEWZIXJ	
NSP	21	Caution label (G)	Not used	Not used	VRW−329	VRW−329	VRW−329	
	30	Front panel	AMB7040	AMB7040	AMB7041	AMB7041	AMB7041	
NSP	50	Display ASSY	AWZ7317	AWZ7317	AWZ7075	AWZ7075	AWZ7076	
NSP	52	Head phone ASSY	AWZ7070	AWZ7070	AWZ7070	AWZ7070	AWZ7071	
	60	Volume ASSY	AWZ7316	AWZ7316	AWZ7077	AWZ7077	AWZ7078	
	62	Rear panel	ANC7082	ANC7083	ANC7086	ANC7086	ANC7087	
⚠	63	Power trans former	ATS7017	ATS7017	ATS7016	ATS7016	ATS7016	
⚠	67	Voltage selector	AKX−507	Not used	Not used	Not used	Not used	
NSP	68	AF ASSY	AWZ7059	AWZ7060	AWZ7060	AWZ7060	AWZ7061	
	70	FM/AM tuner module	AXQ3112	AXQ3112	AXQ3112	AXQ3112	AXQ3114	
	69	FUNCTION ASSY	AWZ7062	AWZ7062	AWZ7062	AWZ7062	AWZ7063	
⚠	75	AC Power cord	ADG1051	ADG1123	PDG1055	PDG1043	PDG1043	
⚠	72	Fuse (FU1102: T1A)	AEK−508	Not used	Not used	Not used	Not used	
NSP	97	Name label	AAL7037	AAL7038	AAL7039	AAL7040	AAL7041	
NSP	98	Manufactured label	AAX−372	Not used	Not used	Not used	Not used	
NSP	100	Caution label (F)	Not used	ARW1021	ARW1021	ARW1021	ARW1021	
NSP	99	Caution label	Not used	ARW1023	ARW1023	ARW1030	ARW1022	

www.manualscenter.com

● For XR−J22/SDXJ

Mark	No.	Description	Parts No.
	1	Function panel	AMB7051
	2	Display window	AAK7046
	3	.....	
	4	.....	
	5	.....	
	6	.....	
	7	Function button	AAD7033
	8	.....	
NSP	9	Single CD sub PCB ASSY	AWX7004
	10	.....	
	11	Flexible cable (25P FFC)	PDD1067
NSP	12	Under base	PNA1832
	13	Supporting feet	AXA7010
NSP	14	PCB support	AEC7006
	15	Single CD Mother PCB ASSY	AWM7092
NSP	16	Single mech. ASSY	PXA1487
	17	Cord holder	RNH−184
	18	.....	
	19	.....	
	20	.....	
	21	.....	
	22	Cassette door (L)	AAN7010
	23	Cassette door (R)	AAN7011
	24	Door panel L	AAK7036
	25	Door panel R	AAK7037
	26	Keep plate	ABK1017
	27	Spring	ABH1078
	28	Keep plate	ABK1017
	29	Spring	ABH1078
	30	Front panel	AMB7040
	31	GEQ. panel	AAK7035
	32	AMP. panel	AAK7032
	33	Stand by lenz	AAK7040
	34	Power button	AAD7022
	35	P. bass lenz	AAK2243
	36	Dolby button	AAD7017
	37	S. bass button	AAD7021
	38	Band button	AAD7020
	39	Tuning buton	AAD7019
	40	ST. wide button	AAD7023
	41	Function button	AAD7018
	42	Deck knob A	AAE7000
	43	Deck knob B	AAE7001
	44	Deck knob C	AAE7002
	45	Deck knob D	AAE7003
	46	Deck knob E	AAE7004
	47	Deck knob F	AAE7005
NSP	48	Deck knob holder	ANG7008
	49	Damper ASSY	AXA1008
NSP	50	Display ASSY	AWZ7317

Mark	No.	Description	Parts No.
	51	Flexible flat cable	ADD1112
NSP	52	Head phone ASSY	AWZ7070
NSP	53	Tape IND. ASSY	AWZ7079
	54	MIC ASSY	AWZ7080
	55	Jack holder	ANG7007
	56	Cassette mech. unit	AWY1174
	57	Connecting holder R	ANG7006
	58	Connecting holder L	ANG7005
	59	.....	
	60	Volume ASSY	AWZ7316
	61	.....	
	62	Rear panel	ANC7082
⚠	63	Power transformer (T1)	ATS7017
	64	.....	
NSP	65	Assembly holder L	ANG7003
NSP	66	Assembly holder R	ANG7004
⚠	67	Voltage selector	AKX−507
	68	AF ASSY	AWZ7059
	69	Function ASSY	AWZ7062
	70	FM/AM tuner module	AXQ3112
	71	.....	
⚠	72	Fuse (FU1101: T1A)	AEK−508
⚠	73	Fuse (FU1102: T1A)	AEK−508
	74	Secondary ASSY	AWZ7064
⚠	75	AC Power cord	ADG1051
⚠	76	AC Cord stopper	AEC−882
	77	Power module	AXQ3118
	78	Mixing knob	AAB7017
	79	Vol knob	AAB7012
	80	PIONEER budge	AAM1047
	81	Bonnet case	ANE7012
	82	Tray name plate	AAK7048
	83	Screw	BPZ30P080FMC
	84	Screw	BBZ30P060FMC
	85	Screw	BBZ30P160FMC
	86	Screw	BBZ30P060FMC
	87	Screw	BBZ30P080FMC
	88	Screw	BPZ30P120FMC
	89	Screw	BBZ30P080FMC
	90	Screw	BPZ26P080FMC
	91	Screw	BPZ30P080FMC
	92	Screw	BBZ30P080FZK
	93	Screw	ASZ30P060FZK
	94	Screw	ABA1095
	95	Screw	BBZ30P060FMC
	96	Screw	BPZ26P080FMC
NSP	97	Name label	ALL7037
NSP	98	Manufactured label	AAX−372

www.manualscenter.com

■ FOR XR−J11

● PART NUMBER DIFFERENCES BETWEEN XR−J11/SDXJ, YPWXJ, HBXJ, HEXJ AND HEWZIXJ

Part number differs between XR−J11/SDXJ, YPWXJ, HBXJ, HEXJ and HEWZIXJ.

Mark	No.	Description	Part No.					Remarks
			XR−J11					
			SDXJ	YPWXJ	HBXJ	HEXJ	HEWZIXJ	
NSP	21	Caution label (G)	Not used	Not used	VRW−329	VRW−329	VRW−329	
	30	Front panel	AMB7034	AMB7034	AMB7036	AMB7036	AMB7036	
	35	P. bass lens	Not used	Not used	AAK2243	AAK2243	AAK2243	
	36	Dolby button	Not used	Not used	AAD7017	AAD7017	AAD7017	
NSP	50	Display ASSY	AWZ7072	AWZ7072	AWZ7083	AWZ7083	AWZ7073	
NSP	52	Head phone ASSY	AWZ7070	AWZ7070	AWZ7070	AWZ7070	AWZ7071	
NSP	53	TAPE IND. ASSY	Not used	Not used	AWZ7079	AWZ7079	AWZ7079	
	60	Volume ASSY	AWZ7077	AWZ7077	AWZ7077	AWZ7077	AWZ7078	
	62	Rear panel	ANC7072	ANC7073	ANC7086	ANC7086	ANC7087	
⚠	63	Power trans former	ATS7017	ATS7017	ATS7016	ATS7016	ATS7016	
NSP	68	AF ASSY	AWZ7055	AWZ7260	AWZ7056	AWZ7056	AWZ7057	
	70	FM/AM tuner module	AXQ3112	AXQ3112	AXQ3112	AXQ3112	AXQ3114	
	69	FUNCTION ASSY	AWZ7062	AWZ7062	AWZ7062	AWZ7062	AWZ7063	
⚠	75	AC Power cord	ADG1051	ADG1123	PDG1055	PDG1043	PDG1043	
⚠	72	Fuse (FU1102: T1A)	AEK−508	Not used	Not used	Not used	Not used	
NSP	97	Name label	AAL7028	AAL7029	AAL7030	AAL7028	AAL7032	
NSP	98	Manufacture label	AAX−372	Not used	Not used	Not used	Not used	
⚠	67	Voltage selector	AKX−507	Not used	Not used	Not used	Not used	
NSP	100	Caution label (F)	Not used	ARW1021	ARW1021	ARW1021	ARW1021	
NSP	99	Caution label	Not used	ARW1023	ARW1023	ARW1030	ARW1022	

www.manualscenter.com

● For XR−J11/SDXJ

Mark	No.	Description	Parts No.
	1	Function panel	AMB7051
	2	Display window	AAK7046
	3	.....	
	4	.....	
	5	.....	
	6	.....	
	7	Function button	AAD7033
	8	.....	
NSP	9	Single CD sub PCB ASSY	AWX7004
	10	.....	
	11	Flexible cable (25PFFC)	PDD1067
NSP	12	Under base	PNA1832
	13	Supporting feet	AXA7010
NSP	14	PCB support	AEC7006
	15	Single CD Mother PCB ASSY	AWM7092
NSP	16	Single mech. ASSY	PXA1487
	17	Cord holder	RNH−184
	18	.....	
	19	.....	
	20	.....	
	21	.....	
	22	Cassette door (L)	AAN7010
	23	Cassette door (R)	AAN7011
	24	Door panel L	AAK7036
	25	Door panel R	AAK7037
	26	Keep plate	ABK1017
	27	Spring	ABH1078
	28	Keep plate	ABK1017
	29	Spring	ABH1078
	30	Front panel	AMB7034
	31	GEQ. panel	AAK7034
	32	AMP. panel	AAK7032
	33	Stand by lens	AAK7040
	34	Power button	AAD7022
	35	.....	
	36	.....	
	37	S. bass button	AAD7021
	38	Band button	AAD7020
	39	Tuning buton	AAD7019
	40	.....	
	41	Function button	AAD7018
	42	Deck knob A	AAE7000
	43	Deck knob B	AAE7001
	44	Deck knob C	AAE7002
	45	Deck knob D	AAE7003
	46	Deck knob E	AAE7004
	47	Deck knob F	AAE7005
NSP	48	Deck knob holder	ANG7008
	49	Damper ASSY	AXA1008
NSP	50	Display ASSY	AWZ7072

Mark	No.	Description	Parts No.
	51	Flexible flat cable	ADD1112
NSP	52	Head phone ASSY	AWZ7070
NSP	53	.....	
	54	.....	
	55	.....	
	56	Cassette mech. unit	AWY1174
	57	Connecting holder R	ANG7006
	58	Connecting holder L	ANG7005
	59	.....	
	60	Volume ASSY	AWZ7077
	61	.....	
	62	Rear panel	ANC7072
⚠	63	Power transformer	ATS7017
	64	.....	
NSP	65	Assembly holder L	ANG7003
NSP	66	Assembly holder R	ANG7004
⚠	67	Voltage selector	AKX−507
	68	AF ASSY	AWZ7055
	69	Function ASSY	AWZ7062
	70	FM/AM tuner module	AXQ3112
	71	.....	
⚠	72	Fuse (FU1101: T1A)	AEK−508
⚠	73	Fuse (FU1102: T1A)	AEK−508
	74	Secondary ASSY	AWZ7064
⚠	75	AC Power cord	ADG1051
⚠	76	AC Cord stopper	AEC−882
	77	Power module	AXQ3118
	78	.....	
	79	Vol knob	AAB7012
	80	PIONEER budge	AAM1047
	81	Bonnet case	ANE7012
	82	Tray name plate	AAK7048
	83	Screw	BPZ30P080FMC
	84	Screw	BBZ30P060FMC
	85	Screw	BBZ30P160FMC
	86	Screw	BBZ30P060FMC
	87	Screw	BBZ30P080FMC
	88	Screw	BPZ30P120FMC
	89	Screw	BBZ30P080FMC
	90	Screw	BPZ26P080FMC
	91	Screw	BPZ30P080FMC
	92	Screw	BBZ30P080FZK
	93	Screw	ASZ30P060FZK
	94	Screw	ABA1095
	95	Screw	BBZ30P060FMC
	96	Screw	BPZ26P080FMC
NSP	97	Name label	AAL7028
NSP	98	Manufacture label	AAX−372

www.manualscenter.com

1.5.3 POWER MODULE SECTION

■ FOR AXQ3118 AND AXQ3117

● PART NUMBER DIFFERENCES BETWEEN AXQ3118 AND AXQ3117

Part number differs between AXQ3118 and AXQ3117.

Mark	No.	Description	Part No.		Remarks
			Except KUXJ, KCXJ types	KUXJ, KCXJ type	
			AXQ3118	AXQ3117	
⚠	24	TRANSISTOR (Q7511)	2SA1263N	2SA1264N	
⚠	25	TRANSISTOR (Q7512)	2SA1263N	2SA1264N	
⚠	26	TRANSISTOR (Q7513)	2SC3180N	2SC3181N	
⚠	27	TRANSISTOR (Q7514)	2SC3180N	2SC3181N	
	20	TRANSISTOR (Q7503)	Not used	2SC4793	
	21	TRANSISTOR (Q7504)	Not used	2SC4793	
	22	TRANSISTOR (Q7509)	Not used	2SC1837	
	23	TRANSISTOR (Q7510)	Not used	2SC1837	
	1	FRONT ASSY	AWZ5454	AWZ5453	

● For AXQ3118

Mark	No.	Description	Parts No.
	1	FRONT ASSY FOR 50W	AWZ5454
	2	REAR, PWR, PRTEC ASSY	AWZ5455
	3	Heat sink (AL)	ANH7008
	4	Holder	ANG7009
	5	Sheet	AEB7001
	6	Mold A (PLS)	AMR7005
	7	Mold B (PLS)	AMR7006
	8	Screw	ABA1021
	9	Screw	BBZ30P140FZK
	10	Screw	BPZ30P350FZK
	11	Fan motor	AXM1019
	12	Regurator IC (IC7401)	MC7812CT
	13	Regurator IC (IC7402)	NJM7912A
	14	Regulator IC (IC7403)	MC7812CT
	15	Regulator IC (IC7404)	MC7805CT
	16	.....	
	17	.....	
	18	.....	
	19	.....	
	20	.....	
	21	.....	
	22	.....	
	23	.....	
⚠	24	Transistor (Q7511)	2SA1263N
⚠	25	Transistor (Q7512)	2SA1263N
⚠	26	Transistor (Q7513)	2SC3180N
⚠	27	Transistor (Q7514)	2SC3180N

www.manualscenter.com

1.5.4 CASSETTE MECHA UNIT (FOR ALL MODELS)

Mark	No.	Description	Parts No.
	1	SPRING	AZB1336
	2	SPRING	AZB1337
	3	SPRING	AZB1338
	4	SPRING	AZB1339
	5	SPRING	AZB1340
	6	CASSETTE SPRING	AZB1378
	7	SPRING	AZB1344
	8	SPRING	AZB1346
	9	SPRING	AZB1347
	10	SPRING	AZB1348
	11	PLATE SPRING	AZB1349
	12	WASHER	AZB1350
	13	WASHER	AZB1351
	14	SPRING	AZB1352
	15	SPRING	AZB1353
	16	EARTH LUG	AZB1354
	17	SCREW	AZB1355
	18	SCREW	AZB1356
	19	SCREW	AZB1357
	20	SCREW	AZB1358
	21	SCREW	AZB1359
	22	SCREW	AZB1360
	23	SCREW	AZB1361
	24	SCREW	AZB1362
	25	SCREW	AZB1363
	26	SCREW	AZB1364
	27	PC BOARD	AZN2111
	28	FRAM ASSY	AZN2113
	29	FUNCTION PLATE	AZN2116
	30	REC STOPPER	AZN2117
	31	SW LEVER	AZN2118
	32	REC LEVER	AZN2119
	33	PLAY LEVER	AZN2120
	34	REW LEVER	AZN2121
	35	FF LEVER	AZN2122
	36	SE LEVER	AZN2123
	37	PAUSE LEVER	AZN2124
	38	PAUSE ARM	AZN2125
	39	BELT	AZN2126
	40	BELT	AZN2127
	41	P IDLER ARM	AZN2128
	42	PL IDLER	AZN2129
	43	INTER LOCK	AZN2138
	44	EJECT LEVER	AZN2139
	45	PF FF IDLER ASSY	AZN2140
	46	SENSOR	AZN2148
	47	AS BASE	AZN2149
	48	CAM GEAR	AZN2150
	49	SENSOR LEVER	AZN2151
	50	CONTROL LEVER	AZN2152
	51	FW ASSY	AZN2153
	52	PINCH ARM	AZN2157
	53	PINCH ROLLER	AZN2158
	54	HEAD BASE	AZN2159
	55	HEAD HOLDER	AZN2160
	56	SWITCH PLATE	AZN2162
	57	BUTTON R HOLDER	AZN2163
	58	BUTTON L HOLDER	AZN2164
	59	P HOLDER	AZN2165
	60	CONNECT PLATE	AZN2166
	61	CONNECT ARM	AZN2167
	62	RELEASE ARM	AZN2168
	63	MOTOR HOLDER	AZN2246
	64	BASE SPI ASSY	AZN2171
	65	TAPE GUIDE	AZN2174
	66	E HEAD	AZP1025
	67	R/P HEAD	AZP1036
	68	MOTOR ASSY	AZX1037
	69	SWITCH (S2)	ASX1014
	70	CASSETTE MECHA	AWY1150
	71	2P WIRE ASSY A (J4)	ADD1104
	72	2P WIRE ASSY B (J5)	ADD1105
	73	2P WIRE ASSY C (J7)	ADD1106
	74	4P JUMPER WIRE (J8)	ADD1107
	75	2P WIRE ASSY D (J3)	ADD1108
	76	2P WIRE ASSY E (J6)	ADD1109
	77	3P HEAD WIRE ASSY (J1)	ADX1613
	78	5P HEAD WIRE ASSY (J2)	ADX1614
	79	SWITCH (S1)	ASX1014
	80	SWITCH (S3)	ASX1014
	81	CERAMIC CAPACITOR (C1)	CKDYF223Z50
	82	SWITCH (S4)	ASX1014
	83	SWITCH (S5)	ASX1014
NSP	101	SPRING	AZB1341
	102	SPRING	AZB1342
NSP	103	SPRING	AZB1345
NSP	104	CHASSIS	AZN2112
NSP	105	FRAM	AZN2114
NSP	106	METAL	AZN2115
	107	SPINDLE BASE	AZN2130
	108	T REEL ASSY	AZN2131
NSP	109	REEL CAP	AZN2132
NSP	110	REEL GEAR	AZN2133
NSP	111	FELT	AZN2134
NSP	112	T REEL	AZN2135
NSP	113	S REEL	AZN2136
	114	FF IDLER	AZN2137
NSP	115	IDLER BASE	AZN2141
NSP	116	PF IDLER	AZN2142
NSP	117	PF PULLY HOLDER	AZN2143
NSP	118	PF PULLY	AZN2144
NSP	119	PF BUSH	AZN2145
NSP	120	SHAFT	AZN2146
NSP	121	FELT	AZN2147
NSP	122	FLY WHEEL	AZN2154
NSP	123	RING	AZN2155
NSP	124	CAPSTAN SHAFT	AZN2156
NSP	125	MOTOR PULLEY	AZN2170
NSP	126	MOTOR	AZX1038
	127	NYLON BINDER	AEC−093
NSP	128	JUMPER CONNECTOR (7PL)	KPD7L

www.manualscenter.com

1.5.5 SINGLE MECHA ASSY (FOR XR−J22 AND XR−J11)

Mark	No.	Description	Parts No.
	1	LEVER SWITCH (CLAMP)	DSK1003
	2	FLOAT SCREW	PBA1048
	3	RUBBER BELT	PEB1193
	4	MOTOR PULLEY	PNW1634
	5	TRAY	PNW2455
	6	FLOAT BASE	PNW2032
	7	DRIVE GEAR	PNW2369
	8	GEAR PULLEY	PNW2034
	9	CLAMPER BASE	PNW2375
	10	CLAMP CAM	PNW2364
	11	DC MOTOR/0.75W (LOADING)	PXM1010
	12	FLOAT RUBBER	PEB1014
	13	FLOAT RUBBER	PEB1132
	14	SCREW	BPZ26P080FMC
	15	SCREW	Z39−018
	16	SCREW	PMZ26P040FMC
	17	PINION GEAR	PNW2055
	18	DC MOTOR (CARRIAGE)	PXM1027
	19	DC MOTOR ASSY (SPINDLE with oil)	PEA1235
	20	CARRIAGE BASE	PNW2445
	21	DISC TABLE	PNW1608
	22	SCREW	JFZ20P030FNI
	23	SCREW	JFZ17P025FZK
	24	GEAR 3	PNW2054
	25	GEAR 2	PNW2053
	26	WASHER	WT12D032D025
	27	PICKUP ASSY	PEA1179
	28	GUIDE BAR	PLA1094
	29	GEAR 1	PNW2052
NSP	30	GEAR STOPPER	PNB1303
	31	SCREW	BPZ20P060FMC
	32	PWB HOLDER	PNW2057
	33	SCREW	BPZ26P100FMC
NSP	34	EARTH LEAD UNIT	PDF1104
	35	SCREW	BBZ26P060FMC
NSP	36	MECHANISM BOARD ASSY	PWX1192
NSP	37	CLAMP MAGNET	PMF1014
NSP	38	YOKE	PNB1216
NSP	39	SHIELD PLATE	PNB1317
NSP	40	CLAMPER S	PNW1609
NSP	41	LOADING BASE	PNW2376
	42	EARTH LEAD UNIT	XDF−502
NSP	43	SERVO MECHANISM ASSY	PXA1478
	44	DC MOTOR ASSY (CARRIAGE)	PEA1246

• How to install the disc table

1 Use nipper or other tool to cut the three sections marked Ⓐ figure 1. Then remove the spacer.

2 While supporting the spindle motor shaft with the stopper, put spacer on top of the motor base (angled so it doesn't touch section Ⓑ),and stick the disc table on top (takes about 9Kg pressure). Take off the spacer.

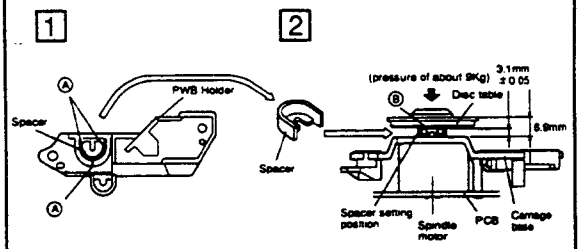

www.manualscenter.com

1.5.6 MULTI MECHA ASSY (FOR XR−J22M AND XR−J11M)

Mark	No.	Description	Parts No.
	1	MOTOR PULLEY	PNW1634
	2	GEAR HOLDER	PNW1929
	3	.....	
	4	CAM GEAR	PNW1923
	5	BELT	PEB1138
	6	TOP GUIDE N	PNW2441
	7	GEAR PULLEY	PNW1918
	8	GEAR S	PNW1919
	9	GEAR L	PNW1920
	10	EJECT SPRING	PBH1107
	11	SWITCH LEVER	PNW1927
	12	SEVEN BAR	PNW1931
	13	SUB ROTARY LEVER	PNW1933
	14	SUB ROTARY LEVER SPRING	PBH1111
	15	ROTARY LEVER	PNW1932
	16	DRIVE PLATE	PNW1930
	17	MOTOR SCREW	PBA−112
	18	HOLDER LEVER SPRING	PBH1110
	19	DISC HOLDER	PNW1924
	20	CUSHION A	PED1001
	21	HOLDER LEVER	PNW1925
	22	FLOAT RUBBER	PEB1014
	23	FLOAT RUBBER	PEB1132
	24	FLOAT SCREW	PBA1073
	25	RELEASE LEVER	PNW1934
	26	RELEASE SPRING	PBH1106
	27	CLAMPER CAM	PNW1922
	28	CLAMPER HOLDER	PNW1921
	29	CLAMPER SPRING	PBH1109
	30	CLAMPER	PNW1857
	31	LOCK LEVER	PNW1917
	32	LOCK SPRING	PBH1108
	33	STAIR NL	PNW2443
	34	STAIR NR	PNW2444
	35	SYNCHRONIZE LEVER	PNW1926
	36	MOTOR ASSY (LOADING, DISC SELECT)	PEA1130
	37	SCREW	PMZ26P040FMC
	38	SCREW	PPZ30P080FMC
	39	SCREW	BBZ30P060FMC
	40	WASHER	WT26D047D025
	41	WASHER	WA31D054D025
	42	E RING	Z39−010
	43	SCREW	IPZ30P080FMC
	44	RUBBER SPACER	PEB1238
	45	RUBBER SPACER	PEB1179
	46	SILENT RING	PBK1093
	47	WASHER	WA62D130D025
	48	EARTH SPRING	PBH1132
	49	GUIDE BAR	PLA1094
	50	DISC TABLE	PNW1067
	51	GEAR 1	PNW2052
	52	GEAR 2	PNW2053
	53	GEAR 3	PNW2054
	54	PINION GEAR	PNW2055
	55	PWB HOLDER	PNW2057
NSP	56	CARRIAGE DC MOTOR/0.3W	PXM1027
	57	D.C. MOTOR ASSY (SPINDLE with OIL)	PEA1235
	58	PICKUP ASSY	PEA1179
	59	DISC TABLE ASSY	PEA1035
	60	SCREW	BBZ26P060FMC
	61	SCREW	BPZ20P060FMC
	62	SCREW	BPZ26P100FMC
	63	SCREW	JFZ17P025FZK
	64	SCREW	JFZ20P040FMC
	65	WASHER	WT12D032D025
	66	.....	
	67	STOP SPRING	PBH1131
	68	STOPPER	PNW2069
	69	CARRIAGE DC MOTOR ASSY (CARRIAGE)	PEA1246
	70	UPPER CHASSIS N	PNB1267
	71	SUB CHASSIS N	PNW2440
NSP	101	MOTOR	VXM1033
NSP	102	EJECT LEVER	PNB1306
	103	.....	
NSP	104	SERVO MECHANISM ASSY M	PXA1417
NSP	105	LOADING BOARD ASSY	PWZ2038
	106	.....	
	107	.....	
NSP	108	MAIN CHASSIS	PNW2074
NSP	109	SELECT BOARD ASSY	PWZ2533
NSP	110	MOTOR BOARD ASSY	PWZ2040
NSP	111	MECHANISM BOARD ASSY	PWX1279
NSP	112	EARTH LEAD UNIT	PDF1074
NSP	113	CLAMP MAGNET	PMF1014
NSP	114	GEAR STOPPER	PNB1303
NSP	115	YOKE M	PNB1312
NSP	116	AV ANGLE	PNB1405
	117	CARRIAGE BASE	PNW2445

www.manualscenter.com

1.6 PCB PARTS LIST

NOTES :

- *Parts marked by "NSP" are generally unavailable because they are not in our Master Spare Parts List.*
- *The ⚠ mark found on some component parts indicates the importance of the safety factor of the part. Therefore, when replacing, be sure to use parts of identical designation.*
- *Parts marked by "◉" are not always kept in stock. Their delivery time may be longer than usual or they may be unavailable.*
- *When ordering resistors, first convert resistance values into code form as shown in the following examples.*

Ex. 1 When there are 2 effective digits (any digit apart from 0), such as 560 ohm and 47k ohm (tolerance is shown by J = 5%, and K = 10%).

560Ω → 56 × 10^1 → 561 ····· RD1/8PM [5][6][1] J
47kΩ → 47 × 10^3 → 473 ····· RD1/4PS [4][7][3] J
0.5Ω → 0R5 ····· RN2H [0][R][5] K
1Ω → 010 ····· RS1P [0][1][0] K

Ex. 2 When there are 3 effective digits (such as in high precision metal film resistors).

5.62kΩ → 562 × 10^1 → 5621 ····· RM1/4PC [5][6][2][1] F

1.6.1 FOR XR−J22M

■ List of Whole PCB Assemblies

Mark	Symbol & Description	Part No.		Remarks
		SDXJ	YPWXJ	
NSP	AF assy	AWK7012	AWK7013	
	├ AF assy	AWZ7059	AWZ7060	
	├ FUNCTION assy	AWZ7062	AWZ7062	
	└ SECONDARY assy	AWZ7064	AWZ7064	
NSP	DISPLAY assy	AWK7019	AWK7019	
	├ DISPLAY assy	AWZ7317	AWZ7317	
	├ VOLUME assy	AWZ7316	AWZ7316	
	├ TAPE IND. assy	AWZ7079	AWZ7079	
	├ MIC assy	AWZ7080	AWZ7080	
NSP	└ HEAD PHONE assy	AWZ7070	AWZ7070	
	POWER MODULE	AXQ3118	AXQ3118	
	├ FRONT ASSY FOR 50W	AWZ5454	AWZ5454	
	└ PWR, PRTEC assy	AWZ5455	AWZ5455	
	FM/AM TUNER MODULE	AXQ3112	AXQ3112	
	MULTI CD MOTHER PCB assy	AWM7093	AWM7093	
NSP	MULTI CD SUB PCB assy	AWX7005	AWX7005	
	├ FUNCTION PCB assy 1	AWZ7216	AWZ7216	
	└ FUNCTION PCB assy 2	AWZ7217	AWZ7217	
NSP	LOADING BOARD assy	PWZ2038	PWZ2038	
NSP	MOTOR BOARD assy	PWZ2040	PWZ2040	
NSP	SELECT BOARD assy	PWZ2533	PWZ2533	
NSP	MECHANISM BOARD assy	PWX1279	PWX1279	

www.manualscenter.com

● For XR−J22M/SDXJ

Mark	No.	Description	Parts No.
		AF ASSY	
		SEMICONDUCTORS	
	IC4401		CXA1100P
	IC1001		ICP−N15
	IC4301		NJM4558DXP
	IC2551		NJM4558LD
	IC4201		TC4066BP
	IC4202		UPC4570C
	Q1009		2SA1115
	Q1002, Q1005, Q1010		2SA1515
	Q1007, Q1012, Q1014, Q4305, Q4306		2SA933S
	Q1004		2SB560
	Q1013, Q2102, Q4204, Q4303, Q4304		2SC1740S
	Q4401−Q4406		2SC1740S
	Q1006, Q4352		2SC1845
	Q1008		2SC2603
	Q1003, Q1011		2SC3377
	Q4351		2SD438
	Q4209, Q4210		2SK246
	Q4201, Q4202		2SK373
	Q2101, Q4203, Q4205, Q4212, Q4213		DTA124ES
	Q4307		DTA124ES
	Q1001, Q4206, Q4211		DTC124ES
	D1010−D1012, D1018, D1019		HSS104−02
	D1024−D1026, D1029, D1030		HSS104−02
	D2101, D2102, D4201−D4204, D4301		HSS104−02
	D4303, D4304, D4351−D4354		HSS104−02
	D4401−D4403, D4405, D4406		HSS104−02
	D1023		RD5.1ESB
	D1017		RD7.5ESB
	D1006−D1009, D1013−D1016		S5566
		COILS AND FILTERS	
	F4401, F4402		ATF1064
	L4401, L4402		LAU221K
	L4353		LTA102J
	L4301, L4302		LTA392J
	L4351, L4352		LTA822J
		SWITCH	
	S4001		ASH1027
		CAPACITORS	
	C1101 (0.01/400)		ACG1003
	C1002, C1003 (2200/56)		ACH1250
	C4203, C4204		CCCSL100D50
	C4353, C4354		CCCSL271K500
	C1017		CEANP470M25
	C4405, C4406		CEAS010M50
	C4311, C4312, C4403, C4415, C4416		CEAS100M50
	C4410		CEAS101M10
	C4407		CEAS101M16
	C1010		CEAS102M16
	C1007		CEAS102M35
	C1014, C1015, C4404		CEAS220M50
	C1006		CEAS222M35
	C4363, C4413, C4414		CEAS2R2M50
	C4207, C4208, C4305, C4306		CEAS330M35
	C1009		CEAS332M16
	C1018		CEAS3R3M50
	C1016		CEAS470M10
	C4365		CEAS470M16
	C1012, C1013		CEAS470M50
	C1008		CEASR47M100
	C4401, C4402, C4409, C4411		CEASR68M50
	C4201, C4202, C4205, C4206		CKCYB471K50
	C4355, C4356		CKCYB681K50
	C1019, C4213−C4215, C4408		CKCYF473Z50
	C4419, C4420		CKCYX103M16
	C4421, C4422		CKCYX104M16
	C4417, C4418		CKCYX333M16
	C2551, C2552		CKPUYB561K50
	C4361		CQMA103K400
	C1207−C1210		CQMA104J50
	C4303, C4304		CQMA272J50
	C4307, C4308		CQMA273J50
	C4362		CQMA333K250
	C4360		CQMA473J50
	C4209, C4210		CQMA682J50
	C4301, C4302		CQMA683J50
		RESISTORS	
	VR4301, VR4302		VRTP6VS103
	VR4351, VR4352, VR4401, VR4402		VRTP6VS104
	VR4403, VR4404		VRTP6VS203
	R4356		RD1/4PM180J
	R1019, R1022		RD1/4PM681J
	R1031		RD1/4PM750J
⚠	R1209, R1210		RD1/4PMF6R8J
	R1102		RS2LMF390J
⚠	R4355		RS2LMF470J
⚠	R1001, R1002		RS2LMFR22J
	Other Resistors		RD1/8PM□□□J
		OTHERS	
	SPEAKER TERMINAL 4−P		AKE−109
	JACK		AKN−203
	CN101 40P SOCKET		AKP1085
	CN1203 CONNECTOR (5P)		KPE5
	CN4001 3P PLUG		KM250MA3
	CN4002 5P PLUG		KM250MA5
		FUNCTION ASSY	
		SEMICONDUCTORS	
	IC2101, IC2103		NJM4558DXP
	IC2102		TC4052BP
		CAPACITORS	
	C2103, C2104		CEAS3R3M50
	C2109, C2110		CEAS470M16
	C2111, C2112		CKCYF473Z50
	C2101, C2102		CKPUYB101K50
	C2105, C2106		CKPUYX152N16
	C2107, C2108		CKPUYX562N16
		RESISTORS	
	All Resistors		RD1/8PM□□□J
		OTHERS	
	PIN JACK (4P)		AKB1124
		SECONDARY ASSY	
		SEMICONDUCTORS	
	D1001		D3SBA20 (L)
	D1020, D1021, D1031, D1032		HSS104−02

www.manualscenter.com

Mark	No.	Description	Parts No.
CAPACITORS			
	C1001		ACG1005
DISPLAY ASSY			
SEMICONDUCTORS			
	IC3101, IC3102		BA3812L
	IC3301, IC3501, IC3701–IC3703		NJM4558DXP
	IC1901		PDG110A
	Q1708		2SA933S
	Q1901, Q3501, Q3502		2SC1740S
	Q3301		2SK246
	Q3302		DTA124ES
	Q1903		DTC124ES
	Q1703–Q1707, Q1902		DTC143ES
	D1701–D1706		AEL1148
	D1707, D1801–D1803, D1901–D1903		HSS104–02
	D1905, D3101, D3102, D3301		HSS104–02
	D3701–D3705		HSS104–02
COILS AND FILTERS			
	L1901		LAU220K
SWITCHES			
	S1801–S1804, S1806, S1815–S1818		ASG1034
	S1821–S1824		ASG1034
CAPACITORS			
	C1902		ACH1246
	C3125, C3126		CCCSL121J50
	C1906, C1907, C1912, C3507		CEAS010M50
	C1910		CEAS100M50
	C1904		CEAS221M10
	C1901, C3001–C3004		CEAS470M16
	C3101, C3102, C3127, C3128		CEAS4R7M50
	C3109, C3110		CEASR15M50
	C3117, C3118		CEASR68M50
	C1908		CKCYB102K50
	C3704, C3709		CKCYB152K50
	C3113, C3114		CKCYB182K50
	C3121, C3122		CKCYB391K50
	C3107, C3108		CKCYB392K50
	C3301, C3302, C3705, C3710		CKCYB471K50
	C3703, C3708		CKCYB472K50
	C3305		CKCYB681K50
	C1903, C1905, C1913, C2201, C2202		CKCYF473Z50
	C1909		CKCYX104M25
	C3111, C3112, C3702, C3707		CKCYX153M16
	C3105, C3106		CKCYX183M16
	C3115, C3116		CKCYX393M16
	C3701, C3706, C3711–C3715		CKCYX473M16
	C1911		CKCYX473M25
	C3103, C3104		CKCYX683M16
	C3501, C3502		CQMA223J50
	C3503, C3504		CQMA473J50
	C3119, C3120		CQMA682J50
RESISTORS			
	VR4101		ACP1055
	VR3101–VR3105 (100K–B5X2)		ACU1030
	Other Resistors		RD1/8PM□□□J
OTHERS			
	V1701 FL TUBE		AAV7005
	CN102 40P SOCKET		AKP1085
	X1901 CRYSTAL RESONATOR		ASS1015
	REMOTE RECEIVER UNIT		AXX1023

Mark	No.	Description	Parts No.
VOLUME ASSY			
SEMICONDUCTORS			
	IC1501		NJM4558DXP
	IC1502		TA8409S
CAPACITORS			
	C1509, C1510		CCCSL101J50
	C1507		CEAS101M25
	C1501–C1504		CEAS4R7M50
	C1511, C1512		CEASR22M50
	C1515, C1516		CFTXA104J50
	C1508		CKCYF473Z50
	C1505, C1506		CKCYX104M25
RESISTORS			
	VR1501 (100K–3B•2)		ACX1089
	Other Resistors		RD1/8PM□□□J
TAPE IND. ASSY			
SEMICONDUCTORS			
	Q4701		2SA933S
	D4701		AEL1148
	D4702		HSS104–02
SWITCH			
	S4801		ASG1034
RESISTORS			
	All Resistors		RD1/8PM□□□J
MIC ASSY			
SEMICONDUCTORS			
	IC2501		NJM4558DXP
	D2501		HSS104–02
CAPACITORS			
	C2502		CEAS010M50
	C2504		CEAS100M50
	C2505		CEAS2R2M50
	C2503		CKCYB331K50
	C2501		CKCYB332K50
	C2506		CKPUYF473Z16
RESISTORS			
	VR2501 (10K–B)		ACS1064
	Other Resistors		RD1/8PM□□□J
OTHERS			
	JACK		AKN1017
HEAD PHONE ASSY			
RESISTORS			
	R1205, R1206		RS2LMF331J
OTHERS			
	JACK		AKN1010
FRONT ASSY FOR 50W			
SEMICONDUCTORS			
	IC7501		UPC4570G2
	IC7701, IC7702		XRA4558F–P
	Q7507, Q7508		2SA1182
	Q7601		2SA1255
	Q7517, Q7518		2SB1115

www.manualscenter.com

Mark	No.	Description	Parts No.
	Q7501, Q7502		2SC2240
	Q7605, Q7606, Q7703		2SC2712
	Q7505, Q7506		2SC2859
	Q7603		2SC3138
	Q7515, Q7516		2SD1615
	Q7704		XDC143EK
	D7505, D7506, D7517, D7518		1SS181
	D7503, D7504, D7516		1SS184
	D7521–D7524		1SS244
	D7115, D7519, D7520, D7525, D7526		HSS104–02
	D7531, D7533, D7701–D7704, D7707		HSS104–02
	D7710–D7714		HSS104–02
	D7507–D7510		RD3.3ESB2
	CAPACITORS		
	C7703		ACG1051
	C7523, C7524		ACH1150
	C7509, C7510		ACH1151
	C7539, C7540		ACH1248
	C7519–C7522, C7545–C7552		CCSQCH101J50
	C7525–C7528		CCSQCH271J50
	C7503, C7504		CCSQCH331J50
	C7541, C7542		CCSQCH470J50
	C7529–C7532		CKSQYB333K50
	C7543, C7544		CKSQYB472K50
	C7602		CKSQYF103Z50
	C7601, C7603, C7702		CKSQYF104Z50
	C7537		CKSQYF473Z50
	RESISTORS		
	VR7701		ACP1053
	R7519, R7520		ACN1106
	R7515, R7516		ACN1107
⚠	R7541, R7542		RD1/4PMF100J
⚠	R7547–R7550		RS1/10S2200F
	R7709		RS1/10S39R0F
	R7710		RS1/10S56R0F
	R7708		RS1/10S7500F
	R7753		RS1/8S000J
⚠	R7537–R7540		RS1/8S100J
	R7553		RS1/8S101J
⚠	R7543, R7544		RS1/8S7R5J
	Other Resistors		RS1/10S□□□J
	PWR, PRTEC ASSY		
	SEMICONDUCTORS		
	Q7208, Q7215, Q7219		2SA1162
	Q7213		2SA1182
	Q7301, Q7302		2SC1815
	Q7207, Q7209, Q7212, Q7214, Q7218		2SC2712
	Q7220, Q7221		2SC2712
	Q7216		2SC2859
	Q7211, Q7217		2SC3138
	Q7210, Q7222		XDA124EK
	D7201, D7205		HSS104–02
	D7204, D7206		HZS6C3L
	D7203		HZS9A2L
	CAPACITORS		
	C7402, C7406, C7408		ACG1050
	C7401, C7405, C7407		ACG1053
	C7212		ACH1056
	C7409		ACH1150
	C7205, C7207, C7208		ACH1151

Mark	No.	Description	Parts No.
	C7301		CKSQYB332K50
	C7213, C7214		CKSQYF103Z50
	C7206, C7404		CKSQYF104Z50
	RESISTORS		
	R7403, R7404		ACN1104
	R7303		RS1/10S1002F
	R7304		RS1/10S8200F
	Other Resistors		RS1/10S□□□J
	OTHERS		
	CN7101	CONNECTOR (12P)	KPE12

OTHER ELECTRICAL PARTS

Mark	No.	Description	Parts No.
	FRONT ASSY FOR 50W		
	SEMICONDUCTORS		
	IC7404		MC7805CT
	IC7401, IC7403		MC7812CT
	IC7402		NJM7912A
	PWR, PRTEC ASSY		
	SEMICONDUCTORS		
⚠	Q7511, Q7512		2SA1263N
⚠	Q7513, Q7514		2SC3180N
	OTHERS		
	PCB FOR POWER MODULE		ANP1734
	FAN MOTOR		AXM1019
	FM/AM TUNER MODULE		
	SEMICONDUCTORS		
	IC6201		LA1836M
	IC6202		LM7001J
	Q6102		2SC2223
	Q6203		2SC2235
	Q6202		2SC2712
	Q6103, Q6214		2SC2714
	Q6201		2SK208
	Q6104		2SK302
	Q6101		3SK194
	Q6204		XDA124EK
	Q6217		XDC124EK
	D6101, D6102		1T33
	COILS AND FILTERS		
	L6104		ATC1003
	L6101		ATC1020
	L6102		ATC1021
	T6101		ATE–063
	L6207	(10.7MHZ)	ATE1013
	F6204		ATF–107
	F6203		ATF–119
	F6101		ATF–155
	F6202	(450KHZ)	ATF1145
	L6103		ATH1043
	L6202, L6203, L6208		LCTA2R2J3225
	CAPACITORS		
	C6202, C6234, C6236		ACG1051
	C6235		ACG1052
	C6107		CCSCH010C50
	C6229		CCSCH821J50
	C6110		CCSQCH020C50
	C6101		CCSQCH050C50
	C6108, C6203, C6268		CCSQCH101J50

www.manualscenter.com

Mark	No.	Description	Parts No.
	C6111, C6116, C6208, C6221, C6222		CCSQCH150J50
	C6115		CCSQCH330J50
	C6114		CCSQRH080D50
	C6113		CCSQRH180J50
	C6105		CCSQTH150J50
	C6261		CEAS010M50
	C6224, C6231, C6233, C6246, C6262		CEAS100M50
	C6216, C6217		CEAS330M16
	C6219		CEAS470M10
	C6243–C6245		CEAS470M16
	C6227		CEAS470M25
	C6238		CEJA100M16
	C6249, C6250		CEJA4R7M35
	C6215		CFTXA103J50
	C6214		CFTXA224J50
	C6103, C6106, C6112, C6204		CKSQYB102K50
	C6102, C6109, C6117, C6210, C6264		CKSQYB103K50
	C6213		CKSQYB223K50
	C6230		CKSQYB333K50
	C6228, C6252		CKSQYB472K50
	C6209, C6237, C6265, C6267		CKSQYB473K50
	C6212, C6218		CKSQYF103Z50
	C6220, C6226, C6239, C6242, C6255		CKSQYF223Z50
	C6225, C6241, C6266		CKSQYF473Z50
	C6232		CKSYB333K50
	C6251		CKSYB472K50
	C6223		CKSYF103Z50
	C6263		CKSYF473Z50
RESISTORS			
	VR6201		ACP1055
	VR6202		VRTB6VS223
	R6299, R6300		RD1/8PM102J
	R6113, R6116, R6118, R6268–R6271		RS1/8S000J
	R6275, R6276, R6278, R6283, R6284		RS1/8S000J
	R6290, R6293, R6294, R6297		RS1/8S000J
	R6243, R6244		RS1/8S101J
	R6211		RS1/8S103J
	R6237		RS1/8S182J
	R6209		RS1/8S221J
	R6239		RS1/8S332J
	R6101		RS1/8S470J
	Other Resistors		RS1/10S□□□J
OTHERS			
	BN6201	TERMINAL 4–P	AKA1016
	X6203	CRYSTAL RESONATOR	ASS1042
	X6201	CRYSTAL RESONATOR	ASS1066
	X6202	CERAMIC RESONATOR	ATF1027
	AM RF TUNING BLOCK		AXX1025

MULTI CD MOTHER PCB ASSY

Mark	No.	Description	Parts No.
SEMICONDUCTORS			
	IC151		CXA1372Q
	IC301		CXD2517Q
⚠	IC201, IC202		LA6520
⚠	IC20		M5298P
	IC405		NJM4558DXP
	IC351		PD4522A
	IC402		TC7S04F
	IC401		TC9268F
	Q361		2SC1740S
	Q401		2SK246
	D301, D383, D385, D401		1SS133X
CAPACITORS			
	C403, C404		CCSQCH150J50
	C435–C438		CCSQCH390J50
	C429, C430		CCSQCH560J50
	C19, C60		CEAS010M50
	C28		CEAS101M10
	C433, C434		CEAS220M25
	C216, C217, C302, C351		CEAS330M16
	C27		CEAS471M6R3
	C160, C162		CEAS4R7M50
	C309		CEASR47M50
	C171		CKSQYB102K50
	C157, C164, C167, C169, C212		CKSQYB103K50
	C308, C354		CKSQYB103K50
	C158, C159, C161, C163, C301		CKSQYB104K25
	C304		CKSQYB104K25
	C306, C441, C442		CKSQYB152K50
	C155		CKSQYB182K50
	C170		CKSQYB332K50
	C156, C168		CKSQYB333K25
	C172		CKSQYB472K50
	C307		CKSQYB473K25
	C11, C12, C202, C203		CKSQYF103Z50
	C205, C206, C353, C361, C42		CKSQYF103Z50
	C426, C44, C45		CKSQYF103Z50
	C410, C411, C414–C416		CKSQYF104Z25
	C418, C419, C422, C423		CKSQYF104Z25
	C427, C428, C431, C432		CKSQYF104Z25
	C424		CKSQYF473Z25
RESISTORS			
	VR151, VR152 (22K)		RCP1046
	Other Resistors		RS1/10S□□□J
OTHERS			
	CN131	CONNECTOR	12FMZ–ABT
	CN204	6P JUMPER CONNECTOR	52147–0610
	CN201	TOP POST (6P)	B6P–SHF
	CN351	CONNECTOR	HLEM23S
	CN13	CONNECTOR (11P)	KPE11
	HEAT SINK		PNB1233
	X401	XTAL RES (OSC)	PSS1008
	PCB BINDER		VEF1008
	CN202	CONNECTER	VKN1051
	X351	CERAMIC RESONATOR	VSS1028
	CN203		2–173981–4

FUNCTION PCB ASSY 1

Mark	No.	Description	Parts No.
SEMICONDUCTORS			
	D701–D706		1SS254
SWITCHES			
	S701, S703–S707, S710–S713		PSG1006
	S716		PSG1006
OTHERS			
	CN701	CONNECTOR	HLEM23R
	V701		PEL1076

FUNCTION PCB ASSY 2

Mark	No.	Description	Parts No.
SWITCHES			
	S702, S708, S709, S714, S715		PSG1006
	S717, S718		PSG1006

www.manualscenter.com

Mark	No.	Description	Parts No.
LOADING BOARD ASSY			
SWITCHES			
	S601, S602		DSG1016
MOTOR BOARD ASSY			
MOTOR BOARD assy has no service part.			
SELECT BOARD ASSY			
SWITCHES			
	S604–S606		DSG1016
	S603		PSG1010
MECHANISM BOARD ASSY			
SWITCH			
	S610		DSG1016

● For XR–J22M/YPWXJ

Note:
PCB assemblies of XR–J22M/YPWXJ are the same as those of XR–J22M/SDXJ except for the following :

Mark	No.	Description	Parts No.
AF ASSY			
SEMICONDUCTORS			
	IC4401		CXA1100P
	IC1001		ICP–N15
	IC4301		NJM4558DXP
	IC2551		NJM4558LD
	IC4201		TC4066BP
	IC4202		UPC4570C
	Q1009		2SA1115
	Q1002, Q1005, Q1010		2SA1515
	Q1007, Q1012, Q1014, Q4305, Q4306		2SA933S
	Q1004		2SB560
	Q1013, Q2102, Q4204, Q4303, Q4304		2SC1740S
	Q4401–Q4406		2SC1740S
	Q1006, Q4352		2SC1845
	Q1008		2SC2603
	Q1003, Q1011		2SC3377
	Q4351		2SD438
	Q4209, Q4210		2SK246
	Q4201, Q4202		2SK373
	Q2101, Q4203, Q4205, Q4212, Q4213		DTA124ES
	Q4307		DTA124ES
	Q1001, Q4206, Q4211		DTC124ES
	D1010–D1012, D1018, D1019		HSS104–02
	D1024–D1026, D1029, D1030		HSS104–02
	D2101, D2102, D4201–D4204, D4301		HSS104–02
	D4303, D4304, D4351–D4354		HSS104–02
	D4401–D4403, D4405, D4406		HSS104–02
	D1023		RD5.1ESB
	D1017		RD7.5ESB
	D1006–D1009, D1013–D1016		S5566
COILS AND FILTERS			
	F4401, F4402		ATF1064
	L4401, L4402		LAU221K
	L4353		LTA102J
	L4301, L4302		LTA392J
	L4351, L4352		LTA822J
CAPACITORS			
	C1101 (0.01/400)		ACG1003
	C1002, C1003 (2200/56)		ACH1250
	C4203, C4204		CCCSL100D50
	C4353, C4354		CCCSL271K500
	C1017		CEANP470M25
	C4405, C4406		CEAS010M50
	C4311, C4312, C4403, C4415, C4416		CEAS100M50
	C4410		CEAS101M10
	C4407		CEAS101M16
	C1010		CEAS102M16
	C1007		CEAS102M35
	C1014, C1015, C4404		CEAS220M50
	C1006		CEAS222M35
	C4363, C4413, C4414		CEAS2R2M50
	C4207, C4208, C4305, C4306		CEAS330M35
	C1009		CEAS332M16
	C1018		CEAS3R3M50
	C1016		CEAS470M10
	C4365		CEAS470M16
	C1012, C1013		CEAS470M50
	C1008		CEASR47M100
	C4401, C4402, C4409, C4411		CEASR68M50
	C4201, C4202, C4205, C4206		CKCYB471K50
	C4355, C4356		CKCYB681K50
	C1019, C4213–C4215, C4408		CKCYF473Z50
	C4419, C4420		CKCYX103M16
	C4421, C4422		CKCYX104M16
	C4417, C4418		CKCYX333M16
	C2551, C2552		CKPUYB561K50
	C4361		CQMA103K400
	C1207–C1210		CQMA104J50
	C4303, C4304		CQMA272J50
	C4307, C4308		CQMA273J50
	C4362		CQMA333K250
	C4360		CQMA473J50
	C4209, C4210		CQMA682J50
	C4301, C4302		CQMA683J50
RESISTORS			
	VR4301, VR4302		VRTP6VS103
	VR4351, VR4352, VR4401, VR4402		VRTP6VS104
	VR4403, VR4404		VRTP6VS203
	R4356		RD1/4PM180J
	R1019, R1022		RD1/4PM681J
	R1031		RD1/4PM750J
⚠	R1209, R1210		RD1/4PMF6R8J
	R1102		RS2LMF390J
⚠	R4355		RS2LMF470J
⚠	R1001, R1002		RS2LMFR22J
	Other Resistors		RD1/8PM□□□J
OTHERS			
	SPEAKER TERMINAL 4–P		AKE–109
	JACK		AKN–203
	CN101 40P SOCKET		AKP1085
	CN1203 CONNECTOR (5P)		KPE5
	CN4001 3P PLUG		KM250MA3
	CN4002 5P PLUG		KM250MA5

www.manualscenter.com

1.6.2 FOR XR−J22

■ List of Whole PCB Assemblies

Mark	Symbol & Description	Part No.					Remarks
		SDXJ	YPWXJ	HEXJ	HBXJ	HEWZIXJ	
NSP	AF assy	AWK7012	AWK7013	AWK7013	AWK7013	AWK7014	
	├ AF assy	AWZ7059	AWZ7060	AWZ7060	AWZ7060	AWZ7061	
	├ FUNCTION assy	AWZ7062	AWZ7062	AWZ7062	AWZ7062	AWZ7063	
	└ SECONDARY assy	AWZ7064	AWZ7064	AWZ7064	AWZ7064	AWZ7064	
NSP	DISPLAY assy	AWK7019	AWK7019	AWK7020	AWK7020	AWK7021	
	├ DISPLAY assy	AWZ7317	AWZ7317	AWZ7075	AWZ7075	AWZ7076	
	├ VOLUME assy	AWZ7316	AWZ7316	AWZ7077	AWZ7077	AWZ7078	
	├ TAPE IND. assy	AWZ7079	AWZ7079	AWZ7079	AWZ7079	AWZ7079	
	├ MIC assy	AWZ7080	AWZ7080	AWZ7080	AWZ7080	AWZ7080	
NSP	└ HEAD PHONE assy	AWZ7070	AWZ7070	AWZ7070	AWZ7070	AWZ7071	
	POWER MODULE	AXQ3118	AXQ3118	AXQ3118	AXQ3118	AXQ3118	
	├ FRONT ASSY FOR 50W	AWZ5454	AWZ5454	AWZ5454	AWZ5454	AWZ5454	
	└ PWR, PRTEC ASSY	AWZ5455	AWZ5455	AWZ5455	AWZ5455	AWZ5455	
	FM/AM TUNER MODULE	AXQ3112	AXQ3112	AXQ3112	AXQ3112	AXQ3114	
	SINGLE CD MOTHER PCB assy	AWM7092	AWM7092	AWM7092	AWM7092	AWM7092	
NSP	SINGLE CD SUB PCB assy	AWX7004	AWX7004	AWX7004	AWX7004	AWX7004	
NSP	MECHANISM BOARD assy	PWX1192	PWX1192	PWX1192	PWX1192	PWX1192	

● For XR−J22/SDXJ

Mark	No.	Description	Parts No.
AF ASSY			
SEMICONDUCTORS			
	IC4401		CXA1100P
	IC1001		ICP−N15
	IC4301		NJM4558DXP
	IC2551		NJM4558LD
	IC4201		TC4066BP
	IC4202		UPC4570C
	Q1009		2SA1115
	Q1002, Q1005, Q1010		2SA1515
	Q1007, Q1012, Q1014, Q4305, Q4306		2SA933S
	Q1004		2SB560
	Q1013, Q2102, Q4204, Q4303, Q4304		2SC1740S
	Q4401−Q4406		2SC1740S
	Q1006, Q4352		2SC1845
	Q1008		2SC2603
	Q1003, Q1011		2SC3377
	Q4351		2SD438
	Q4209, Q4210		2SK246
	Q4201, Q4202		2SK373
	Q2101, Q4203, Q4205, Q4212, Q4213		DTA124ES
	Q4307		DTA124ES
	Q1001, Q4206, Q4211		DTC124ES
	D1010−D1012, D1018, D1019		HSS104−02
	D1024−D1026, D1029, D1030		HSS104−02
	D2101, D2102, D4201−D4204, D4301		HSS104−02
	D4303, D4304, D4351−D4354		HSS104−02
	D4401−D4403, D4405, D4406		HSS104−02
	D1023		RD5.1ESB
	D1017		RD7.5ESB
	D1006−D1009, D1013−D1016		S5566
COILS AND FILTERS			
	F4401, F4402		ATF1064
	L4401, L4402		LAU221K
	L4353		LTA102J
	L4301, L4302		LTA392J
	L4351, L4352		LTA822J
SWITCH			
	S4001		ASH1027
CAPACITORS			
	C1101 (0.01/400)		ACG1003
	C1002, C1003 (2200/56)		ACH1250
	C4203, C4204		CCCSL100D50
	C4353, C4354		CCCSL271K500
	C1017		CEANP470M25
	C4405, C4406		CEAS010M50
	C4311, C4312, C4403, C4415, C4416		CEAS100M50
	C4410		CEAS101M10
	C4407		CEAS101M16
	C1010		CEAS102M16
	C1007		CEAS102M35
	C1014, C1015, C4404		CEAS220M50
	C1006		CEAS222M35

www.manualscenter.com

Mark	No.	Description	Parts No.
	C4363, C4413, C4414		CEAS2R2M50
	C4207, C4208, C4305, C4306		CEAS330M35
	C1009		CEAS332M16
	C1018		CEAS3R3M50
	C1016		CEAS470M10
	C4365		CEAS470M16
	C1012, C1013		CEAS470M50
	C1008		CEASR47M100
	C4401, C4402, C4409, C4411		CEASR68M50
	C4201, C4202, C4205, C4206		CKCYB471K50
	C4355, C4356		CKCYB681K50
	C1019, C4213–C4215, C4408		CKCYF473Z50
	C4419, C4420		CKCYX103M16
	C4421, C4422		CKCYX104M16
	C4417, C4418		CKCYX333M16
	C2551, C2552		CKPUYB561K50
	C4361		CQMA103K400
	C1207–C1210		CQMA104J50
	C4303, C4304		CQMA272J50
	C4307, C4308		CQMA273J50
	C4362		CQMA333K250
	C4360		CQMA473J50
	C4209, C4210		CQMA682J50
	C4301, C4302		CQMA683J50
RESISTORS			
	VR4301, VR4302		VRTP6VS103
	VR4351, VR4352, VR4401, VR4402		VRTP6VS104
	VR4403, VR4404		VRTP6VS203
	R4356		RD1/4PM180J
	R1019, R1022		RD1/4PM681J
	R1031		RD1/4PM750J
⚠	R1209, R1210		RD1/4PMF6R8J
	R1102		RS2LMF390J
⚠	R4355		RS2LMF470J
⚠	R1001, R1002		RS2LMFR22J
	Other Resistors		RD1/8PM□□□J
OTHERS			
	SPEAKER TERMINAL 4–P		AKE–109
	JACK		AKN–203
	CN101	40P SOCKET	AKP1085
	CN1203	CONNECTOR (5P)	KPE5
	CN4001	3P PLUG	KM250MA3
	CN4002	5P PLUG	KM250MA5

FUNCTION ASSY

SEMICONDUCTORS

	IC2101, IC2103		NJM4558DXP
	IC2102		TC4052BP

CAPACITORS

	C2103, C2104		CEAS3R3M50
	C2109, C2110		CEAS470M16
	C2111, C2112		CKCYF473Z50
	C2101, C2102		CKPUYB101K50
	C2105, C2106		CKPUYX152N16
	C2107, C2108		CKPUYX562N16

RESISTORS

	All Resistors		RD1/8PM□□□J

OTHERS

	PIN JACK (4P)		AKB1124

SECONDARY ASSY

SEMICONDUCTORS

	D1001		D3SBA20 (A)
	D1020, D1021, D1031, D1032		HSS104–02

CAPACITORS

	C1001		ACG1005

DISPLAY ASSY

SEMICONDUCTORS

	IC3101, IC3102		BA3812L
	IC3301, IC3501, IC3701–IC3703		NJM4558DXP
	IC1901		PDG110A
	Q1708		2SA933S
	Q1901, Q3501, Q3502		2SC1740S
	Q3301		2SK246
	Q3302		DTA124ES
	Q1903		DTC124ES
	Q1703–Q1707, Q1902		DTC143ES
	D1701–D1706		AEL1148
	D1707, D1801–D1803, D1901–D1903		HSS104–02
	D1905, D3101, D3102, D3301		HSS104–02
	D3701–D3705		HSS104–02

COILS AND FILTERS

	L1901		LAU220K

SWITCHES

	S1801–S1804, S1806, S1815–S1818		ASG1034
	S1821–S1824		ASG1034

CAPACITORS

	C1902		ACH1246
	C3125, C3126		CCCSL121J50
	C1906, C1907, C1912, C3507		CEAS010M50
	C1910		CEAS100M50
	C1904		CEAS221M10
	C1901, C3001–C3004		CEAS470M16
	C3101, C3102, C3127, C3128		CEAS4R7M50
	C3109, C3110		CEASR15M50
	C3117, C3118		CEASR68M50
	C1908		CKCYB102K50
	C3704, C3709		CKCYB152K50
	C3113, C3114		CKCYB182K50
	C3121, C3122		CKCYB391K50
	C3107, C3108		CKCYB392K50
	C3301, C3302, C3705, C3710		CKCYB471K50
	C3703, C3708		CKCYB472K50
	C3305		CKCYB681K50
	C1903, C1905, C1913, C2201, C2202		CKCYF473Z50
	C1909		CKCYX104M25
	C3111, C3112, C3702, C3707		CKCYX153M16
	C3105, C3106		CKCYX183M16
	C3115, C3116		CKCYX393M16
	C3701, C3706, C3711–C3715		CKCYX473M16
	C1911		CKCYX473M25
	C3103, C3104		CKCYX683M16
	C3501, C3502		CQMA223J50
	C3503, C3504		CQMA473J50
	C3119, C3120		CQMA682J50

RESISTORS

	VR4101		ACP1055
	VR3101–VR3105	(100K–B5X2)	ACU1030
	Other Resistors		RD1/8PM□□□J

www.manualscenter.com

Mark	No.	Description	Parts No.
		OTHERS	
	V1701	FL TUBE	AAV7005
	CN102	40P SOCKET	AKP1085
	X1901	CRYSTAL RESONATOR	ASS1015
		REMOTE RECEIVER UNIT	AXX1023
		VOLUME ASSY	
		SEMICONDUCTORS	
	IC1501		NJM4558DXP
	IC1502		TA8409S
		CAPACITORS	
	C1509, C1510		CCCSL101J50
	C1507		CEAS101M25
	C1501–C1504		CEAS4R7M50
	C1511, C1512		CEASR22M50
	C1515, C1516		CFTXA104J50
	C1508		CKCYF473Z50
	C1505, C1506		CKCYX104M25
		RESISTORS	
	VR1501	(100K–3B*2)	ACX1089
		Other Resistors	RD1/8PM□□□J
		TAPE IND. ASSY	
		SEMICONDUCTORS	
	Q4701		2SA933S
	D4701		AEL1148
	D4702		HSS104–02
		SWITCH	
	S4801		ASG1034
		RESISTORS	
		All Resistors	RD1/8PM□□□J
		MIC ASSY	
		SEMICONDUCTORS	
	IC2501		NJM4558DXP
	D2501		HSS104–02
		CAPACITORS	
	C2502		CEAS010M50
	C2504		CEAS100M50
	C2505		CEAS2R2M50
	C2503		CKCYB331K50
	C2501		CKCYB332K50
	C2506		CKPUYF473Z16
		RESISTORS	
	VR2501	(10K–B)	ACS1064
		Other Resistors	RD1/8PM□□□J
		OTHERS	
		JACK	AKN1017
		HEAD PHONE ASSY	
		RESISTORS	
	R1205, R1206		RS2LMF331J
		OTHERS	
		JACK	AKN1010

Mark	No.	Description	Parts No.
		FRONT ASSY FOR 50W	
		SEMICONDUCTORS	
	IC7501		UPC4570G2
	IC7701, IC7702		XRA4558F–P
	Q7507, Q7508		2SA1182
	Q7601		2SA1255
	Q7517, Q7518		2SB1115
	Q7501, Q7502		2SC2240
	Q7605, Q7606, Q7703		2SC2712
	Q7505, Q7506		2SC2859
	Q7603		2SC3138
	Q7515, Q7516		2SD1615
	Q7704		XDC143EK
	D7505, D7506, D7517, D7518		1SS181
	D7503, D7504, D7516		1SS184
	D7521–D7524		1SS244
	D7115, D7519, D7520, D7525, D7526		HSS104–02
	D7531, D7533, D7701–D7704, D7707		HSS104–02
	D7710–D7714		HSS104–02
	D7507–D7510		RD3.3ESB2
		CAPACITORS	
	C7703		ACG1051
	C7523, C7524		ACH1150
	C7509, C7510		ACH1151
	C7539, C7540		ACH1248
	C7519–C7522, C7545–C7552		CCSQCH101J50
	C7525–C7528		CCSQCH271J50
	C7503, C7504		CCSQCH331J50
	C7541, C7542		CCSQCH470J50
	C7529–C7532		CKSQYB333K50
	C7543, C7544		CKSQYB472K50
	C7602		CKSQYF103Z50
	C7601, C7603, C7702		CKSQYF104Z50
	C7537		CKSQYF473Z50
		RESISTORS	
	VR7701		ACP1053
	R7519, R7520		ACN1106
	R7515, R7516		ACN1107
⚠	R7541, R7542		RD1/4PMF100J
⚠	R7547–R7550		RS1/10S2200F
	R7709		RS1/10S39R0F
	R7710		RS1/10S56R0F
	R7708		RS1/10S7500F
	R7753		RS1/8S000J
⚠	R7537–R7540		RS1/8S100J
	R7553		RS1/8S101J
⚠	R7543, R7544		RS1/8S7R5J
		Other Resistors	RS1/10S□□□J
		PWR, PRTEC ASSY	
		SEMICONDUCTORS	
	Q7208, Q7215, Q7219		2SA1162
	Q7213		2SA1182
	Q7301, Q7302		2SC1815
	Q7207, Q7209, Q7212, Q7214, Q7218		2SC2712
	Q7220, Q7221		2SC2712
	Q7216		2SC2859
	Q7211, Q7217		2SC3138
	Q7210, Q7222		XDA124EK
	D7201, D7205		HSS104–02
	D7204, D7206		HZS6C3L
	D7203		HZS9A2L

www.manualscenter.com

Mark	No.	Description	Parts No.
	CAPACITORS		
	C7402, C7406, C7408		ACG1050
	C7401, C7405, C7407		ACG1053
	C7212		ACH1056
	C7409		ACH1150
	C7205, C7207, C7208		ACH1151
	C7301		CKSQYB332K50
	C7213, C7214		CKSQYF103Z50
	C7206, C7404		CKSQYF104Z50
	RESISTORS		
	R7403, R7404		ACN1104
	R7303		RS1/10S1002F
	R7304		RS1/10S8200F
	Other Resistors		RS1/10S□□□J
	OTHERS		
	CN7101	CONNECTOR (12P)	KPE12

OTHER ELECTRICAL PARTS

FRONT ASSY FOR 50W

Mark	No.	Description	Parts No.
	SEMICONDUCTORS		
	IC7404		MC7805CT
	IC7401, IC7403		MC7812CT
	IC7402		NJM7912A

PWR, PRTEC ASSY

Mark	No.	Description	Parts No.
	SEMICONDUCTORS		
⚠	Q7511, Q7512		2SA1263N
⚠	Q7513, Q7514		2SC3180N
	OTHERS		
	PCB FOR POWER MODULE		ANP1734
	FAN MOTOR		AXM1019

FM/AM TUNER MODELE

Mark	No.	Description	Parts No.
	SEMICONDUCTORS		
	IC6201		LA1836M
	IC6202		LM7001J
	Q6102		2SC2223
	Q6203		2SC2235
	Q6202		2SC2712
	Q6103, Q6214		2SC2714
	Q6201		2SK208
	Q6104		2SK302
	Q6101		3SK194
	Q6204		XDA124EK
	Q6217		XDC124EK
	D6101, D6102		1T33
	COILS AND FILTERS		
	L6104		ATC1003
	L6101		ATC1020
	L6102		ATC1021
	T6101		ATE−063
	L6207	(10.7MHZ)	ATE1013
	F6204		ATF−107
	F6203		ATF−119
	F6101		ATF−155
	F6202	(450KHZ)	ATF1145
	L6103		ATH1043
	L6202, L6203, L6208		LCTA2R2J3225
	CAPACITORS		
	C6202, C6234, C6236		ACG1051
	C6235		ACG1052
	C6107		CCSCH010C50
	C6229		CCSCH821J50
	C6110		CCSQCH020C50
	C6101		CCSQCH050C50
	C6108, C6203, C6268		CCSQCH101J50
	C6111, C6116, C6208, C6221, C6222		CCSQCH150J50
	C6115		CCSQCH330J50
	C6114		CCSQRH080D50
	C6113		CCSQRH180J50
	C6105		CCSQTH150J50
	C6261		CEAS010M50
	C6224, C6231, C6233, C6246, C6262		CEAS100M50
	C6216, C6217		CEAS330M16
	C6219		CEAS470M10
	C6243−C6245		CEAS470M16
	C6227		CEAS470M25
	C6238		CEJA100M16
	C6249, C6250		CEJA4R7M35
	C6215		CFTXA103J50
	C6214		CFTXA224J50
	C6103, C6106, C6112, C6204		CKSQYB102K50
	C6102, C6109, C6117, C6210, C6264		CKSQYB103K50
	C6213		CKSQYB223K50
	C6230		CKSQYB333K50
	C6228, C6252		CKSQYB472K50
	C6209, C6237, C6265, C6267		CKSQYB473K50
	C6212, C6218		CKSQYF103Z50
	C6220, C6226, C6239, C6242, C6255		CKSQYF223Z50
	C6225, C6241, C6266		CKSQYF473Z50
	C6232		CKSYB333K50
	C6251		CKSYB472K50
	C6223		CKSYF103Z50
	C6263		CKSYF473Z50
	RESISTORS		
	VR6201		ACP1055
	VR6202		VRTB6VS223
	R6299, R6300		RD1/8PM102J
	R6113, R6116, R6118, R6268−R6271		RS1/8S000J
	R6275, R6276, R6278, R6283, R6284		RS1/8S000J
	R6290, R6293, R6294, R6297		RS1/8S000J
	R6243, R6244		RS1/8S101J
	R6211		RS1/8S103J
	R6237		RS1/8S182J
	R6209		RS1/8S221J
	R6239		RS1/8S332J
	R6101		RS1/8S470J
	Other Resistors		RS1/10S□□□J
	OTHERS		
	BN6201	TERMINAL 4−P	AKA1016
	X6203	CRYSTAL RESONATOR	ASS1042
	X6201	CRYSTAL RESONATOR	ASS1066
	X6202	CERAMIC RESONATOR	ATF1027
	AM RF TUNING BLOCK		AXX1025

SINGLE CD MOTHER PCB ASSY

Mark	No.	Description	Parts No.
	SEMICONDUCTORS		
	IC151		CXA1372Q
	IC301		CXD2517Q
⚠	IC201, IC202		LA6520
⚠	IC20		M5298P
	IC405		NJM4558DXP

www.manualscenter.com

Mark	No.	Description	Parts No.
	IC351		PD4521A
	IC402		TC7S04F
	IC401		TC9268F
	Q401		2SK246
	D301, D383, D385, D401		1SS133X
CAPACITORS			
	C403, C404		CCSQCH150J50
	C435–C438		CCSQCH390J50
	C429, C430		CCSQCH560J50
	C19, C60		CEAS010M50
	C28		CEAS101M10
	C433, C434		CEAS220M25
	C216, C217, C302, C351		CEAS330M16
	C27		CEAS471M6R3
	C160, C162		CEAS4R7M50
	C309		CEASR47M50
	C171		CKSQYB102K50
	C157, C164, C167, C169, C212		CKSQYB103K50
	C308, C354		CKSQYB103K50
	C158, C159, C161, C163, C301		CKSQYB104K25
	C304		CKSQYB104K25
	C306, C441, C442		CKSQYB152K50
	C155		CKSQYB182K50
	C170		CKSQYB332K50
	C156, C168		CKSQYB333K25
	C172		CKSQYB472K50
	C307		CKSQYB473K25
	C11, C12, C202, C203		CKSQYF103Z50
	C205, C206, C353, C361, C42		CKSQYF103Z50
	C426, C44, C45		CKSQYF103Z50
	C410, C411, C414–C416		CKSQYF104Z25
	C418, C419, C422, C423		CKSQYF104Z25
	C427, C428, C431, C432		CKSQYF104Z25
	C424		CKSQYF473Z25
RESISTORS			
	VR151, VR152 (22K)		RCP1046
	Other Resistors		RS1/10S□□□J
OTHERS			
	CN131 CONNECTOR		12FMZ–ABT
	CN201 TOP POST (6P)		B6P–SHF
	CN351 CONNECTOR		HLEM25S
	CN13 CONNECTOR (11P)		KPE11
	HEAT SINK		PNB1233
	X401 XTAL RES (OSC)		PSS1008
	PCB BINDER		VEF1008
	CN202 CONNECTER		VKN1051
	CN206 CONNECTOR 5P		VKN1052
	X351 CERAMIC RESONATOR		VSS1028
	CN203		2–173981–4

SINGLE CD SUB PCB ASSY

SEMICONDUCTORS

	D701–D704		1SS254

SWITCHES

	S701–S711		PSG1006

OTHERS

	CN701 CONNECTOR		HLEM25R
	V701		PEL1062

MECHANISM BOARD ASSY

SWITCH

	S610		DSG1016

Mark	No.	Description	Parts No.

● For XR–J22/YPWXJ, HEXJ and HBXJ

Note:
PCB assemblies of XR–J22/YPWXJ, HEXJ and HBXJ are the same as those of XR–J22/SDXJ except for the following.

AF ASSY

SEMICONDUCTORS

	IC4401		CXA1100P
	IC1001		ICP–N15
	IC4301		NJM4558DXP
	IC2551		NJM4558LD
	IC4201		TC4066BP
	IC4202		UPC4570C
	Q1009		2SA1115
	Q1002, Q1005, Q1010		2SA1515
	Q1007, Q1012, Q1014, Q4305, Q4306		2SA933S
	Q1004		2SB560
	Q1013, Q2102, Q4204, Q4303, Q4304		2SC1740S
	Q4401–Q4406		2SC1740S
	Q1006, Q4352		2SC1845
	Q1008		2SC2603
	Q1003, Q1011		2SC3377
	Q4351		2SD438
	Q4209, Q4210		2SK246
	Q4201, Q4202		2SK373
	Q2101, Q4203, Q4205, Q4212, Q4213		DTA124ES
	Q4307		DTA124ES
	Q1001, Q4206, Q4211		DTC124ES
	D1010–D1012, D1018, D1019		HSS104–02
	D1024–D1026, D1029, D1030		HSS104–02
	D2101, D2102, D4201–D4204, D4301		HSS104–02
	D4303, D4304, D4351–D4354		HSS104–02
	D4401–D4403, D4405, D4406		HSS104–02
	D1023		RD5.1ESB
	D1017		RD7.5ESB
	D1006–D1009, D1013–D1016		S5566

COILS AND FILTERS

	F4401, F4402		ATF1064
	L4401, L4402		LAU221K
	L4353		LTA102J
	L4301, L4302		LTA392J
	L4351, L4352		LTA822J

CAPACITORS

	C1101 (0.01/400)		ACG1003
	C1002, C1003 (2200/56)		ACH1250
	C4203, C4204		CCCSL100D50
	C4353, C4354		CCCSL271K500
	C1017		CEANP470M25
	C4405, C4406		CEAS010M50
	C4311, C4312, C4403, C4415, C4416		CEAS100M50
	C4410		CEAS101M10
	C4407		CEAS101M16
	C1010		CEAS102M16
	C1007		CEAS102M35
	C1014, C1015, C4404		CEAS220M50
	C1006		CEAS222M35
	C4363, C4413, C4414		CEAS2R2M50
	C4207, C4208, C4305, C4306		CEAS330M35
	C1009		CEAS332M16
	C1018		CEAS3R3M50

www.manualscenter.com

Mark	No.	Description	Parts No.
	C1016		CEAS470M10
	C4365		CEAS470M16
	C1012, C1013		CEAS470M50
	C1008		CEASR47M100
	C4401, C4402, C4409, C4411		CEASR68M50
	C4201, C4202, C4205, C4206		CKCYB471K50
	C4355, C4356		CKCYB681K50
	C1019, C4213−C4215, C4408		CKCYF473Z50
	C4419, C4420		CKCYX103M16
	C4421, C4422		CKCYX104M16
	C4417, C4418		CKCYX333M16
	C2551, C2552		CKPUYB561K50
	C4361		CQMA103K400
	C1207−C1210		CQMA104J50
	C4303, C4304		CQMA272J50
	C4307, C4308		CQMA273J50
	C4362		CQMA333K250
	C4360		CQMA473J50
	C4209, C4210		CQMA682J50
	C4301, C4302		CQMA683J50
RESISTORS			
	VR4301, VR4302		VRTP6VS103
	VR4351, VR4352, VR4401, VR4402		VRTP6VS104
	VR4403, VR4404		VRTP6VS203
	R4356		RD1/4PM180J
	R1019, R1022		RD1/4PM681J
	R1031		RD1/4PM750J
⚠	R1209, R1210		RD1/4PMF6R8J
	R1102		RS2LMF390J
⚠	R4355		RS2LMF470J
⚠	R1001, R1002		RS2LMFR22J
	Other Resistors		RD1/8PM□□□J
OTHERS			
	SPEAKER TERMINAL 4−P		AKE−109
	JACK		AKN−203
	CN101	40P SOCKET	AKP1085
	CN1203	CONNECTOR (5P)	KPE5
	CN4001	3P PLUG	KM250MA3
	CN4002	5P PLUG	KM250MA5

Note:
For parts which are differs between AWZ7317 and AWZ7075 and between AWZ7316 and AWZ7077, refer to SCHEMATIC DIAGRAM (SCH−5).

● For XR−J22/HEWZIXJ

Note:
PCB assemblies of XR−J22/HEWZIXJ are the same as those of XR−J22/SDXJ except for the following :

AF ASSY

SEMICONDUCTORS

Mark	No.	Description	Parts No.
	IC4401		CXA1100P
	IC1001		ICP−N15
	IC4301		NJM4558DXP
	IC2551		NJM4558LD
	IC4201		TC4066BP
	IC4202		UPC4570C
	Q1009		2SA1115
	Q1002, Q1005, Q1010		2SA1515
	Q1007, Q1012, Q1014, Q4305, Q4306		2SA933S
	Q1004		2SB560
	Q1013, Q2102, Q4204, Q4303, Q4304		2SC1740S
	Q4401−Q4406		2SC1740S
	Q1006, Q4352		2SC1845
	Q1008		2SC2603
	Q1003, Q1011		2SC3377
	Q4351		2SD438
	Q4209, Q4210		2SK246
	Q4201, Q4202		2SK373
	Q2101, Q4203, Q4205, Q4212, Q4213		DTA124ES
	Q4307		DTA124ES
	Q1001, Q4206, Q4211		DTC124ES
	D1010−D1012, D1018, D1019		HSS104−02
	D1024−D1026, D1029, D1030		HSS104−02
	D2101, D2102, D4201−D4204, D4301		HSS104−02
	D4303, D4304, D4351−D4354		HSS104−02
	D4401−D4403, D4405, D4406		HSS104−02
	D1023		RD5.1ESB
	D1017		RD7.5ESB
	D1006−D1009, D1013−D1016		S5566
COILS AND FILTERS			
	L1101		ATF1006
	F4401, F4402		ATF1064
	L1201−L1204	(5.3UH)	ATH−059
	L4401, L4402		LAU221K
	L4353		LTA102J
	L4301, L4302		LTA392J
	L4351, L4352		LTA822J
CAPACITORS			
	C1101, C1102	(0.01/400)	ACG1003
	C1002, C1003	(2200/56)	ACH1250
	C4203, C4204		CCCSL100D50
	C4353, C4354		CCCSL271K500
	C1203, C1204		CCDSL121J50
	C1017		CEANP470M25
	C4405, C4406		CEAS010M50
	C4311, C4312, C4403, C4415, C4416		CEAS100M50
	C4410		CEAS101M10
	C4407		CEAS101M16
	C1010		CEAS102M16
	C1007		CEAS102M35
	C1014, C1015, C4404		CEAS220M50
	C1006		CEAS222M35
	C4363, C4413, C4414		CEAS2R2M50
	C4207, C4208, C4305, C4306		CEAS330M35
	C1009		CEAS332M16
	C1018		CEAS3R3M50
	C1016		CEAS470M10
	C4365		CEAS470M16
	C1012, C1013		CEAS470M50
	C1008		CEASR47M100
	C4401, C4402, C4409, C4411		CEASR68M50
	C4205, C4206, C4201, C4202		CKCYB471K50
	C4355, C4356		CKCYB681K50
	C1019, C4213−C4215, C4408		CKCYF473Z50
	C4419, C4420		CKCYX103M16
	C4421, C4422		CKCYX104M16
	C4417, C4418		CKCYX333M16
	C2551, C2552		CKPUYB561K50

www.manualscenter.com

Mark	No.	Description	Parts No.
	C4361		CQMA103K400
	C1207–C1210		CQMA104J50
	C4303, C4304		CQMA272J50
	C4307, C4308		CQMA273J50
	C4362		CQMA333K250
	C4360		CQMA473J50
	C4209, C4210		CQMA682J50
	C4301, C4302		CQMA683J50
	C1201, C1202		CQMXA103J100
	RESISTORS		
	VR4301, VR4302		VRTP6VS103
	VR4351, VR4352, VR4401, VR4402		VRTP6VS104
	VR4403, VR4404		VRTP6VS203
	R1201, R1202		RD1/4PM100J
	R1203, R1204		RD1/4PM101J
	R4356		RD1/4PM180J
	R1019, R1022		RD1/4PM681J
	R1031		RD1/4PM750J
⚠	R1209, R1210		RD1/4PMF6R8J
	R1102		RS2LMF390J
⚠	R4355		RS2LMF470J
⚠	R1001, R1002		RS2LMFR22J
	Other Resistors		RD1/8PM□□□J
	OTHERS		
	SPEAKER TERMINAL 4–P		AKE–109
	JACK		AKN–203
	CN101	40P SOCKET	AKP1085
	CN1203	CONNECTOR (5P)	KPE5
	CN4001	3P PLUG	KM250MA3
	CN4002	5P PLUG	KM250MA5

FUNCTION ASSY

Mark	No.	Description	Parts No.
	SEMICONDUCTORS		
	IC2101, IC2103		NJM4558DXP
	IC2102		TC4052BP
	CAPACITORS		
	C2103, C2104		CEAS3R3M50
	C2109, C2110		CEAS470M16
	C2111, C2112		CKCYF473Z50
	C2118–C2125		CKPUYB101K50
	C2101, C2102, C2116, C2117		CKPUYB471K50
	C2128, C2129		CKPUYF473Z16
	C2105, C2106		CKPUYX152N16
	C2107, C2108		CKPUYX562N16
	C2131, C2132		CKDYF473Z50
	RESISTORS		
	All Resistors		RD1/8PM□□□J
	OTHERS		
	PIN JACK (4P)		AKB1124

DISPLAY ASSY

Mark	No.	Description	Parts No.
	SEMICONDUCTORS		
	IC3101, IC3102		BA3812L
	IC3301, IC3501, IC3701–IC3703		NJM4558DXP
	IC1901		PDG110A
	Q1708		2SA933S
	Q1901, Q3501, Q3502		2SC1740S
	Q3301		2SK246
	Q3302		DTA124ES
	Q1903		DTC124ES
	Q1703–Q1707, Q1902		DTC143ES
	D1701–D1706		AEL1148
	D1707, D1801–D1803, D1901–D1903		HSS104–02
	D1905, D3101, D3102, D3301		HSS104–02
	D3701–D3705		HSS104–02
	COILS AND FILTERS		
	L1901		LAU220K
	SWITCHES		
	S1801–S1804, S1806, S1815–S1818		ASG1034
	S1821–S1824		ASG1034
	CAPACITORS		
	C1902		ACH1246
	C3303, C3304, C3505, C3506		CCCSL101J50
	C3125, C3126		CCCSL121J50
	C1906, C1907, C1912, C3507		CEAS010M50
	C1910		CEAS100M50
	C1904		CEAS221M10
	C1901, C3001–C3004		CEAS470M16
	C3101, C3102, C3127, C3128		CEAS4R7M50
	C3109, C3110		CEASR15M50
	C3117, C3118		CEASR68M50
	C1908		CKCYB102K50
	C3704, C3709		CKCYB152K50
	C3113, C3114		CKCYB182K50
	C3121, C3122		CKCYB391K50
	C3107, C3108		CKCYB392K50
	C3301, C3302, C3705, C3710		CKCYB471K50
	C3703, C3708		CKCYB472K50
	C3305		CKCYB681K50
	C1903, C1905, C1913, C2201, C2202		CKCYF473Z50
	C1909		CKCYX104M25
	C3111, C3112, C3702, C3707		CKCYX153M16
	C3105, C3106		CKCYX183M16
	C3115, C3116		CKCYX393M16
	C3701, C3706, C3711–C3715		CKCYX473M16
	C1911		CKCYX473M25
	C3103, C3104		CKCYX683M16
	C3501, C3502		CQMA223J50
	C3503, C3504		CQMA473J50
	C3119, C3120		CQMA682J50
	RESISTORS		
	VR4101		ACP1055
	VR3101–VR3105	(100K–B5×2)	ACU1030
	Other Resistors		RD1/8PM□□□J
	OTHERS		
	V1701	FL TUBE	AAV7005
	CN102	40P SOCKET	AKP1085
	X1901	CRYSTAL RESONATOR	ASS1015
	REMOTE RECEIVER UNIT		AXX1023

VOLUME ASSY

Mark	No.	Description	Parts No.
	SEMICONDUCTORS		
	IC1501		NJM4558DXP
	IC1502		TA8409S
	CAPACITORS		
	C1509, C1510		CCCSL101J50
	C1513, C1514		CCDSL101J50
	C1507		CEAS101M25
	C1501–C1504		CEAS4R7M50
	C1511, C1512		CEASR22M50

www.manualscenter.com

Mark	No.	Description	Parts No.
	C1515, C1516		CFTXA683J50
	C1508		CKCYF473Z50
	C1505, C1506		CKCYX104M25
	C1517, C1518		CKDYB471K50
RESISTORS			
	VR1501	(100K−3B*2)	ACX1089
	Other Resistors		RD1/8PM□□□J
HEAD PHONE ASSY			
CAPACITORS			
	C1205, C1206		CQMXA473J100
	C1207		CKDYX223M25
RESISTORS			
	R1205, R1206		RS2LMF331J
	R1209		RD1/8PM100J
OTHERS			
	JACK		AKN1010
FM/AM TUNER MODULE			
SEMICONDUCTORS			
	IC6201		LA1836M
	IC6202		LM7001J
	Q6102		2SC2223
	Q6203		2SC2235
	Q6202, Q6218		2SC2712
	Q6103, Q6214		2SC2714
	Q6201		2SK208
	Q6104, Q6105		2SK302
	Q6101		3SK194
	Q6204		XDA124EK
	Q6217		XDC124EK
	D6101−D6104		1SV228
COILS AND FILTERS			
	L6106		ATC1003
	L6105		ATC1015
	L6101		ATC1016
	L6102		ATC1017
	L6103		ATC1018
	L6104		ATC1019
	T6101		ATE−063
	L6207	(10.7MHZ)	ATE1013
	F6204		ATF−107
	F6203		ATF−119
	F6202	(450KHZ)	ATF1145
	F6205		ATF1152
	L6107		ATH1043
	L6202, L6203, L6208		LCTA2R2J3225
	L6205		LCTA680J3225
CAPACITORS			
	C6204, C6234, C6236, C6269		ACG1051
	C6235		ACG1052
	C6120		CCSCH060D50
	C6229		CCSCH821J50
	C6111, C6122		CCSQCH010C50
	C6112		CCSQCH020C50
	C6118		CCSQCH080D50
	C6113		CCSQCH101J50
	C6116, C6208, C6221, C6222		CCSQCH150J50
	C6117		CCSQCH330J50

Mark	No.	Description	Parts No.
	C6272		CCSQSL470J50
	C6105		CCSQSL471J50
	C6101		CCSQTH110J50
	C6119		CCSQTH150J50
	C6109		CCSQTH270J50
	C6107, C6110		CCSQTH300J50
	C6106		CCSQTH330J50
	C6261		CEAS010M50
	C6224, C6231, C6233, C6246, C6262		CEAS100M50
	C6216, C6217		CEAS330M16
	C6219		CEAS470M10
	C6243−C6245		CEAS470M16
	C6227		CEAS470M25
	C6238, C6248		CEJA100M16
	C6249, C6250		CEJA4R7M35
	C6215		CFTXA103J50
	C6214		CFTXA224J50
	C6115, C6125, C6126, C6207		CKSQYB102K50
	C6102, C6114, C6121, C6124, C6210		CKSQYB103K50
	C6264		CKSQYB103K50
	C6247		CKSQYB122K50
	C6213		CKSQYB223K50
	C6230		CKSQYB273K50
	C6228		CKSQYB472K50
	C6209, C6237, C6267		CKSQYB473K50
	C6251, C6252		CKSQYB562K50
	C6212, C6218		CKSQYF103Z50
	C6220, C6226, C6239, C6242		CKSQYF223Z50
	C6255, C6256		CKSQYF223Z50
	C6225, C6241		CKSQYF473Z50
	C6123		CKSYB103K50
	C6232		CKSYB273K50
	C6223		CKSYF103Z50
	C6263		CKSYF473Z50
RESISTORS			
	VR6201		ACP1055
	VR6202		VRTB6VS223
	R6299, R6300		RD1/8PM102J
	R6115, R6119, R6123, R6127, R6129		RS1/8S000J
	R6268−R6271, R6275, R6276, R6278		RS1/8S000J
	R6283, R6284, R6293, R6294, R6297		RS1/8S000J
	R6302, R6303		RS1/8S000J
	R6243, R6244		RS1/8S101J
	R6211, R6239		RS1/8S103J
	R6237		RS1/8S122J
	R6209		RS1/8S221J
	R6112		RS1/8S473J
	Other Resistors		RS1/10S□□□J
OTHERS			
	BN6201	2P TERMINAL WITH PAL	AKA1017
	X6203	CRYSTAL RESONATOR	ASS1042
	X6201	CRYSTAL RESONATOR	ASS1066
	X6202	CERAMIC RESONATOR	ATF1027
	AM RF TUNING BLOCK		AXX1025

www.manualscenter.com

1.6.3 FOR XR−J11M

■ List of Whole PCB Assemblies

Mark	Symbol & Description	Part No.				Remarks
		SDXJ	YPWXJ	KUXJ	KCXJ	
NSP	AF assy	AWK7008	AWK7072	AWK7011	AWK7011	
	├ AF assy	AWZ7055	AWZ7260	AWZ7058	AWZ7058	
	├ FUNCTION assy	AWZ7062	AWZ7062	AWZ7062	AWZ7062	
	└ SECONDARY assy	AWZ7064	AWZ7064	AWZ7065	AWZ7065	
NSP	DISPLAY assy	AWK7015	AWK7015	AWK7018	AWK7018	
	├ DISPLAY assy	AWZ7072	AWZ7072	AWZ7074	AWZ7074	
	├ VOLUME assy	AWZ7077	AWZ7077	AWZ7082	AWZ7082	
	├ TAPE IND. assy	.....	.....	AWZ7079	AWZ7079	
	├ MIC assy	.....	.....	.....	.....	
NSP	└ HEAD PHONE assy	AWZ7070	AWZ7070	AWZ7210	AWZ7210	
	POWER MODULE	AXQ3118	AXQ3118	AXQ3117	AXQ3117	
	├ FRONT ASSY FOR 50W	AWZ5454	AWZ5454	.....	.....	
	├ FRONT ASSY FOR 100W	.....	.....	AWZ5453	AWZ5453	
	└ PWR, PRTEC ASSY	AWZ5455	AWZ5455	AWZ5455	AWZ5455	
	FM/AM TUNER MODULE	AXQ3112	AXQ3112	AXQ3112	AXQ3112	
	MULTI CD MOTHER PCB assy	AWM7093	AWM7093	AWM7093	AWM7093	
NSP	MULTI CD SUB PCB assy	AWX7005	AWX7005	AWX7005	AWX7005	
	├ FUNCTION PCB assy 1	AWZ7216	AWZ7216	AWZ7216	AWZ7216	
	└ FUNCTION PCB assy 2	AWZ7217	AWZ7217	AWZ7217	AWZ7217	
NSP	LOADING BOARD assy	PWZ2038	PWZ2038	PWZ2038	PWZ2038	
NSP	MOTOR BOARD assy	PWZ2040	PWZ2040	PWZ2040	PWZ2040	
NSP	SELECT BOARD assy	PWZ2533	PWZ2533	PWZ2533	PWZ2533	
NSP	MECHANISM BOARD assy	PWX1279	PWX1279	PWX1279	PWX1279	

● For XR−J11M/SDXJ

Mark	No.	Description	Parts No.
AF ASSY			
SEMICONDUCTORS			
	IC1001		ICP−N15
	IC4202, IC4301, IC4501, IC4551		NJM4558DXP
	IC4201		TC4066BP
	Q1009		2SA1115
	Q1002, Q1005, Q1010		2SA1515
	Q1007, Q1012, Q1014, Q4305, Q4306		2SA933S
	Q1004		2SB560
	Q1013, Q2102, Q4204, Q4303, Q4304		2SC1740S
	Q4403−Q4406		2SC1740S
	Q1006, Q4352		2SC1845
	Q1008		2SC2603
	Q1003, Q1011		2SC3377
	Q4351		2SD438
	Q4209, Q4210		2SK246
	Q4201, Q4202		2SK373
	Q2101, Q4203, Q4205, Q4212, Q4213		DTA124ES
	Q4307		DTA124ES
	Q1001, Q4206, Q4211		DTC124ES
	D1010−D1012, D1018, D1019		HSS104−02
	D1024−D1026, D1029, D1030		HSS104−02
	D2101, D2102, D4201−D4204, D4301		HSS104−02
	D4303, D4304, D4351−D4354		HSS104−02
	D4402, D4403		HSS104−02
	D1023		RD5.1ESB
	D1017		RD7.5ESB
	D1006−D1009, D1013−D1016		S5566
COILS AND FILTERS			
	L4401, L4402		LAU221K
	L4353		LTA102J
	L4301, L4302		LTA392J
	L4351, L4352		LTA822J
SWITCH			
	S4001		ASH1027

www.manualscenter.com

Mark	No.	Description	Parts No.
	CAPACITORS		
	C1101	(0.01/400)	ACG1003
	C1002, C1003	(2200/56)	ACH1250
	C4203, C4204		CCCSL100D50
	C4353, C4354		CCCSL271K500
	C1017		CEANP470M25
	C4311, C4312, C4403		CEAS100M50
	C1010		CEAS102M16
	C1007		CEAS102M35
	C1014, C1015, C4404		CEAS220M50
	C1006		CEAS222M35
	C4363		CEAS2R2M50
	C4207, C4208, C4305, C4306		CEAS330M35
	C1009		CEAS332M16
	C1018		CEAS3R3M50
	C1016		CEAS470M10
	C4365		CEAS470M16
	C1012, C1013		CEAS470M50
	C1008		CEASR47M100
	C4351, C4352		CKCYB102K50
	C4201, C4202		CKCYB471K50
	C4355, C4356		CKCYB681K50
	C4205, C4206		CKCYB821K50
	C1019, C4213–C4215		CKCYF473Z50
	C4419, C4420		CKCYX103M16
	C4421, C4422		CKCYX104M16
	C4417, C4418		CKCYX333M16
	C4551, C4552		CKPUYX122M16
	C4361		CQMA103K400
	C1207–C1210		CQMA104J50
	C4307, C4308		CQMA273J50
	C4303, C4304		CQMA332J50
	C4362		CQMA333K250
	C4360		CQMA473J50
	C4209, C4210		CQMA682J50
	C4301, C4302		CQMA683J50
	RESISTORS		
	VR4351		VRTP6VS104
	R1036		RD1/4PM100J
	R4356		RD1/4PM180J
	R1019, R1022		RD1/4PM681J
	R1031		RD1/4PM750J
⚠	R1209, R1210		RD1/4PMF6R8J
	R1102		RS2LMF390J
⚠	R4355		RS2LMF470J
⚠	R1001, R1002		RS2LMFR22J
	Other Resistors		RD1/8PM□□□J
	OTHERS		
	SPEAKER TERMINAL 4–P		AKE–109
	JACK		AKN–203
	CN101	40P SOCKET	AKP1085
	CN1203	CONNECTOR (5P)	KPE5
	CN4001	3P PLUG	KM250MA3
	CN4002	5P PLUG	KM250MA5
	FUNCTION ASSY		
	SEMICONDUCTORS		
	IC2101, IC2103		NJM4558DXP
	IC2102		TC4052BP
	CAPACITORS		
	C2103, C2104		CEAS3R3M50
	C2109, C2110		CEAS470M16
	C2111, C2112		CKCYF473Z50
	C2101, C2102		CKPUYB101K50
	C2105, C2106		CKPUYX152N16
	C2107, C2108		CKPUYX562N16
	RESISTORS		
	All Resistors		RD1/8PM□□□J
	OTHERS		
	PIN JACK (4P)		AKB1124
	SECONDARY ASSY		
	SEMICONDUCTORS		
	D1001		D3SBA20 (A)
	D1020, D1021, D1031, D1032		HSS104–02
	CAPACITOR		
	C1001		ACG1005
	DISPLAY ASSY		
	SEMICONDUCTORS		
	IC3101, IC3102		BA3812L
	IC3501		NJM4558DXP
	IC1901		PDG110A
	Q1708		2SA933S
	Q1901, Q3501, Q3502		2SC1740S
	Q1903		DTC124ES
	Q1703–Q1707, Q1902		DTC143ES
	D1701–D1706		AEL1148
	D1707, D1801–D1803, D1901–D1903		HSS104–02
	D1905, D3101, D3102		HSS104–02
	COILS AND FILTERS		
	L1901		LAU220K
	SWITCHES		
	S1801–S1803, S1806, S1815–S1818		ASG1034
	S1821–S1824		ASG1034
	CAPACITORS		
	C1902		ACH1246
	C3125, C3126		CCCSL121J50
	C1906, C1907, C1912, C3507		CEAS010M50
	C1910		CEAS100M50
	C1904		CEAS221M10
	C1901, C3001–C3004		CEAS470M16
	C3101, C3102, C3127, C3128		CEAS4R7M50
	C3109, C3110		CEASR15M50
	C3117, C3118		CEASR68M50
	C1908		CKCYB102K50
	C3113, C3114		CKCYB182K50
	C3121, C3122		CKCYB391K50
	C3107, C3108		CKCYB392K50
	C1903, C1905, C1913, C2201, C2202		CKCYF473Z50
	C1909		CKCYX104M25
	C3111, C3112		CKCYX153M16
	C3105, C3106		CKCYX183M16
	C3115, C3116		CKCYX393M16
	C1911		CKCYX473M25
	C3103, C3104		CKCYX683M16
	C3501, C3502		CQMA223J50
	C3503, C3504		CQMA473J50
	C3119, C3120		CQMA682J50
	RESISTORS		
	VR4101		ACP1055
	VR3101–VR3105	(100K–B5×2)	ACU1030
	Other Resistors		RD1/8PM□□□J

www.manualscenter.com

Mark	No.	Description	Parts No.
		OTHERS	
	V1701	FL TUBE	AAV7004
	CN102	40P SOCKET	AKP1085
	X1901	CRYSTAL RESONATOR	ASS1015
		REMOTE RECEIVER UNIT	AXX1023
		VOLUME ASSY	
		SEMICONDUCTORS	
	IC1501		NJM4558DXP
	IC1502		TA8409S
		CAPACITORS	
	C1509, C1510		CCCSL101J50
	C1507		CEAS101M25
	C1501–C1504		CEAS4R7M50
	C1511, C1512		CEASR22M50
	C1515, C1516		CFTXA683J50
	C1508		CKCYF473Z50
	C1505, C1506		CKCYX104M25
		RESISTORS	
	VR1501	(100K–3B*2)	ACX1089
		Other Resistors	RD1/8PM□□□J
		HEAD PHONE ASSY	
		RESISTORS	
	R1205, R1206		RS2LMF331J
		OTHERS	
		JACK	AKN1010
		FRONT ASSY FOR 50W	
		SEMICONDUCTORS	
	IC7501		UPC4570G2
	IC7701, IC7702		XRA4558F–P
	Q7507, Q7508		2SA1182
	Q7601		2SA1255
	Q7517, Q7518		2SB1115
	Q7501, Q7502		2SC2240
	Q7605, Q7606, Q7703		2SC2712
	Q7505, Q7506		2SC2859
	Q7603		2SC3138
	Q7515, Q7516		2SD1615
	Q7704		XDC143EK
	D7505, D7506, D7517, D7518		1SS181
	D7503, D7504, D7516		1SS184
	D7521–D7524		1SS244
	D7115, D7519, D7520, D7525, D7526		HSS104–02
	D7531, D7533, D7701–D7704, D7707		HSS104–02
	D7710–D7714		HSS104–02
	D7507–D7510		RD3.3ESB2
		CAPACITORS	
	C7703		ACG1051
	C7523, C7524		ACH1150
	C7509, C7510		ACH1151
	C7539, C7540		ACH1248
	C7519–C7522, C7545–C7552		CCSQCH101J50
	C7525–C7528		CCSQCH271J50
	C7503, C7504		CCSQCH331J50
	C7541, C7542		CCSQCH470J50
	C7529–C7532		CKSQYB333K50
	C7543, C7544		CKSQYB472K50
	C7602		CKSQYF103Z50
	C7601, C7603, C7702		CKSQYF104Z50
	C7537		CKSQYF473Z50
		RESISTORS	
	VR7701		ACP1053
	R7519, R7520		ACN1106
	R7515, R7516		ACN1107
⚠	R7541, R7542		RD1/4PMF100J
⚠	R7547–R7550		RS1/10S2200F
	R7709		RS1/10S39R0F
	R7710		RS1/10S56R0F
	R7708		RS1/10S7500F
	R7753		RS1/8S000J
⚠	R7537–R7540		RS1/8S100J
	R7553		RS1/8S101J
⚠	R7543, R7544		RS1/8S7R5J
		Other Resistors	RS1/10S□□□J
		PWR, PRTEC ASSY	
		SEMICONDUCTORS	
	Q7208, Q7215, Q7219		2SA1162
	Q7213		2SA1182
	Q7301, Q7302		2SC1815
	Q7207, Q7209, Q7212, Q7214, Q7218		2SC2712
	Q7220, Q7221		2SC2712
	Q7216		2SC2859
	Q7211, Q7217		2SC3138
	Q7210, Q7222		XDA124EK
	D7201, D7205		HSS104–02
	D7204, D7206		HZS6C3L
	D7203		HZS9A2L
		CAPACITORS	
	C7402, C7406, C7408		ACG1050
	C7401, C7405, C7407		ACG1053
	C7212		ACH1056
	C7409		ACH1150
	C7205, C7207, C7208		ACH1151
	C7301		CKSQYB332K50
	C7213, C7214		CKSQYF103Z50
	C7206, C7404		CKSQYF104Z50
		RESISTORS	
	R7403, R7404		ACN1104
	R7303		RS1/10S1002F
	R7304		RS1/10S8200F
		Other Resistors	RS1/10S□□□J
		OTHERS	
	CN7101	CONNECTOR (12P)	KPE12
		OTHER ELECTRICAL PARTS	
		FRONT ASSY FOR 50W	
		SEMICONDUCTORS	
	IC7404		MC7805CT
	IC7401, IC7403		MC7812CT
	IC7402		NJM7912A
		PWR, PRTEC ASSY	
		SEMICONDUCTORS	
⚠	Q7511, Q7512		2SA1263N
⚠	Q7513, Q7514		2SC3180N

www.manualscenter.com

Mark	No.	Description	Parts No.
		OTHERS	
		PCB FOR POWER MODULE	ANP1734
		FAN MOTOR	AXM1019
		FM/AM TUNER MODELE	
		SEMICONDUCTORS	
		IC6201	LA1836M
		IC6202	LM7001J
		Q6102	2SC2223
		Q6203	2SC2235
		Q6202	2SC2712
		Q6103, Q6214	2SC2714
		Q6201	2SK208
		Q6104	2SK302
		Q6101	3SK194
		Q6204	XDA124EK
		Q6217	XDC124EK
		D6101, D6102	1T33
		COILS AND FILTERS	
		L6104	ATC1003
		L6101	ATC1020
		L6102	ATC1021
		T6101	ATE−063
		L6207 (10.7MHZ)	ATE1013
		F6204	ATF−107
		F6203	ATF−119
		F6101	ATF−155
		F6202 (450KHZ)	ATF1145
		L6103	ATH1043
		L6202, L6203, L6208	LCTA2R2J3225
		CAPACITORS	
		C6202, C6234, C6236	ACG1051
		C6235	ACG1052
		C6107	CCSCH010C50
		C6229	CCSCH821J50
		C6110	CCSQCH020C50
		C6101	CCSQCH050C50
		C6108, C6203, C6268	CCSQCH101J50
		C6111, C6116, C6208, C6221, C6222	CCSQCH150J50
		C6115	CCSQCH330J50
		C6114	CCSQRH080D50
		C6113	CCSQRH180J50
		C6105	CCSQTH150J50
		C6261	CEAS010M50
		C6224, C6231, C6233, C6246, C6262	CEAS100M50
		C6216, C6217	CEAS330M16
		C6219	CEAS470M10
		C6243−C6245	CEAS470M16
		C6227	CEAS470M25
		C6238	CEJA100M16
		C6249, C6250	CEJA4R7M35
		C6215	CFTXA103J50
		C6214	CFTXA224J50
		C6103, C6106, C6112, C6204	CKSQYB102K50
		C6102, C6109, C6117, C6210, C6264	CKSQYB103K50
		C6213	CKSQYB223K50
		C6230	CKSQYB333K50
		C6228, C6252	CKSQYB472K50
		C6209, C6237, C6265, C6267	CKSQYB473K50
		C6212, C6218	CKSQYF103Z50
		C6220, C6226, C6239, C6242, C6255	CKSQYF223Z50
		C6225, C6241, C6266	CKSQYF473Z50
		C6232	CKSYB333K50
		C6251	CKSYB472K50
		C6223	CKSYF103Z50
		C6263	CKSYF473Z50
		RESISTORS	
		VR6201	ACP1055
		VR6202	VRTB6VS223
		R6299, R6300	RD1/8PM102J
		R6113, R6116, R6118, R6268−R6271	RS1/8S000J
		R6275, R6276, R6278, R6283, R6284	RS1/8S000J
		R6290, R6293, R6294, R6297	RS1/8S000J
		R6243, R6244	RS1/8S101J
		R6211	RS1/8S103J
		R6237	RS1/8S182J
		R6209	RS1/8S221J
		R6239	RS1/8S332J
		R6101	RS1/8S470J
		Other Resistors	RS1/10S□□□J
		OTHERS	
		BN6201 TERMINAL 4−P	AKA1016
		X6203 CRYSTAL RESONATOR	ASS1042
		X6201 CRYSTAL RESONATOR	ASS1066
		X6202 CERAMIC RESONATOR	ATF1027
		AM RF TUNING BLOCK	AXX1025
		MULTI CD MOTHER PCB ASSY	
		SEMICONDUCTORS	
		IC151	CXA1372Q
		IC301	CXD2517Q
⚠		IC201, IC202	LA6520
⚠		IC20	M5298P
		IC405	NJM4558DXP
		IC351	PD4522A
		IC402	TC7S04F
		IC401	TC9268F
		Q361	2SC1740S
		Q401	2SK246
		D301, D383, D385, D401	1SS133X
		CAPACITORS	
		C403, C404	CCSQCH150J50
		C435−C438	CCSQCH390J50
		C429, C430	CCSQCH560J50
		C60	CEAS010M50
		C28	CEAS101M10
		C433, C434	CEAS220M25
		C216, C217, C302, C351	CEAS330M16
		C27	CEAS471M6R3
		C160, C162	CEAS4R7M50
		C309	CEASR47M50
		C171	CKSQYB102K50
		C157, C164, C167, C169, C212	CKSQYB103K50
		C308, C354	CKSQYB103K50
		C158, C159, C161, C163, C301	CKSQYB104K25
		C304	CKSQYB104K25
		C306, C441, C442	CKSQYB152K50
		C155	CKSQYB182K50
		C170	CKSQYB332K50
		C156, C168	CKSQYB333K25
		C172	CKSQYB472K50
		C307	CKSQYB473K25
		C11, C12, C202, C203	CKSQYF103Z50

www.manualscenter.com

Mark	No.	Description	Parts No.
	C205, C206, C353, C361, C42		CKSQYF103Z50
	C426, C44, C45		CKSQYF103Z50
	C410, C411, C414–C416		CKSQYF104Z25
	C418, C419, C422, C423		CKSQYF104Z25
	C427, C428, C431, C432		CKSQYF104Z25
	C424		CKSQYF473Z25
RESISTORS			
	VR151, VR152 (22K)		RCP1046
	Other Resistors		RS1/10S□□□J
OTHERS			
	CN131	CONNECTOR	12FMZ–ABT
	CN204	6P JUMPER CONNECTOR	52147–0610
	CN201	TOP POST (6P)	B6P–SHF
	CN351	CONNECTOR	HLEM23S
	CN13	CONNECTOR (11P)	KPE11
	HEAT SINK		PNB1233
	X401	XTAL RES (OSC)	PSS1008
	PCB BINDER		VEF1008
	CN202	CONNECTER	VKN1051
	X351	CERAMIC RESONATOR	VSS1028

FUNCTION PCB ASSY 1

SEMICONDUCTORS

	D701–D706		1SS254

SWITCHES

	S701, S703–S707, S710–S713		PSG1006
	S716		PSG1006

OTHERS

	CN701	CONNECTOR	HLEM23R
	V701		PEL1076

FUNCTION PCB ASSY 2

SWITCHES

	S702, S708, S709, S714, S715		PSG1006
	S717, S718		PSG1006

LOADING BOARD ASSY

SWITCHES

	S601, S602		DSG1016

MOTOR BOARD ASSY

MOTOR BOARD assy has no service part.

SELECT BOARD ASSY

SWITCHES

	S604–S606		DSG1016
	S603		PSG1010

MECHANISM BOARD ASSY

SWITCH

	S610		DSG1016

● For XR–J11M/YPWXJ

Note:
PCB assemblies of XR–J11M/YPWXJ are the same as those of XR–J11M/SDXJ except for the following :

AF ASSY

SEMICONDUCTORS

	IC1001		ICP–N15
	IC4202, IC4301, IC4501, IC4551		NJM4558DXP
	IC4201		TC4066BP
	Q1009		2SA1115
	Q1002, Q1005, Q1010		2SA1515
	Q1007, Q1012, Q1014, Q4305, Q4306		2SA933S
	Q1004		2SB560
	Q1013, Q2102, Q4204, Q4303, Q4304		2SC1740S
	Q4403–Q4406		2SC1740S
	Q1006, Q4352		2SC1845
	Q1008		2SC2603
	Q1003, Q1011		2SC3377
	Q4351		2SD438
	Q4209, Q4210		2SK246
	Q4201, Q4202		2SK373
	Q2101, Q4203, Q4205, Q4212, Q4213		DTA124ES
	Q4307		DTA124ES
	Q1001, Q4206, Q4211		DTC124ES
	D1010–D1012, D1018, D1019		HSS104–02
	D1024–D1026, D1029, D1030		HSS104–02
	D2101, D2102, D4201–D4204, D4301		HSS104–02
	D4303, D4304, D4351–D4354		HSS104–02
	D4402, D4403		HSS104–02
	D1023		RD5.1ESB
	D1017		RD7.5ESB
	D1006–D1009, D1013–D1016		S5566

COILS AND FILTERS

	L4401, L4402		LAU221K
	L4353		LTA102J
	L4301, L4302		LTA392J
	L4351, L4352		LTA822J

CAPACITORS

	C1101	(0.01/400)	ACG1003
	C1002, C1003	(2200/56)	ACH1250
	C4203, C4204		CCCSL100D50
	C4353, C4354		CCCSL271K500
	C1017		CEANP470M25
	C4311, C4312, C4403		CEAS100M50
	C1010		CEAS102M16
	C1007		CEAS102M35
	C1014, C1015, C4404		CEAS220M50
	C1006		CEAS222M35
	C4363		CEAS2R2M50
	C4207, C4208, C4305, C4306		CEAS330M35
	C1009		CEAS332M16
	C1018		CEAS3R3M50
	C1016		CEAS470M10
	C4365		CEAS470M16
	C1012, C1013		CEAS470M50
	C1008		CEASR47M100
	C4351, C4352		CKCYB102K50
	C4201, C4202		CKCYB471K50

www.manualscenter.com

Mark	No.	Description	Parts No.
	C4355, C4356		CKCYB681K50
	C4205, C4206		CKCYB821K50
	C1019, C4213–C4215		CKCYF473Z50
	C4419, C4420		CKCYX103M16
	C4421, C4422		CKCYX104M16
	C4417, C4418		CKCYX333M16
	C4551, C4552		CKPUYX122M16
	C4361		CQMA103K400
	C1207–C1210		CQMA104J50
	C4307, C4308		CQMA273J50
	C4303, C4304		CQMA332J50
	C4362		CQMA333K250
	C4360		CQMA473J50
	C4209, C4210		CQMA682J50
	C4301, C4302		CQMA683J50
RESISTORS			
	VR4351		VRTP6VS104
	R1036		RD1/4PM100J
	R4356		RD1/4PM180J
	R1019, R1022		RD1/4PM681J
	R1031		RD1/4PM750J
⚠	R1209, R1210		RD1/4PMF6R8J
	R1102		RS2LMF390J
⚠	R4355		RS2LMF470J
⚠	R1001, R1002		RS2LMFR22J
	Other Resistors		RD1/8PM□□□J
OTHERS			
	SPEAKER TERMINAL 4–P		AKE–109
	JACK		AKN–203
	CN101 40P SOCKET		AKP1085
	CN1203 CONNECTOR (5P)		KPE5

● For XR–J11M/KUXJ AND KCXJ

Note:
PCB assemblies of XR–J11M/KUXJ and KCXJ are the same as those of XR–J11M/SDXJ except for the following:

AF ASSY

SEMICONDUCTORS

	IC4401		CXA1100P
	IC1001		ICP–N15
	IC4301		NJM4558DXP
	IC4201		TC4066BP
	IC4202		UPC4570C
	Q1009		2SA1115
	Q1002, Q1005, Q1010		2SA1515
	Q1007, Q1012, Q1014, Q4305, Q4306		2SA933S
	Q1004		2SB560
	Q1013, Q2102, Q4204, Q4303, Q4304		2SC1740S
	Q4401–Q4406		2SC1740S
	Q1006, Q4352		2SC1845
	Q1008		2SC2603
	Q1003, Q1011		2SC3377
	Q4351		2SD438
	Q4209, Q4210		2SK246
	Q4201, Q4202		2SK373
	Q2101, Q4203, Q4205, Q4212, Q4213		DTA124ES
	Q4307		DTA124ES
	Q1001, Q4206, Q4211		DTC124ES
	D1010–D1012, D1018, D1019		HSS104–02
	D1024–D1026, D1029, D1030		HSS104–02
	D2101, D2102, D4201–D4204, D4301		HSS104–02
	D4303, D4304, D4351–D4354		HSS104–02
	D4401–D4403, D4405, D4406		HSS104–02
	D1023		RD5.1ESB
	D1017		RD7.5ESB
	D1006–D1009, D1013–D1016		S5566
COILS AND FILTERS			
	F4401, F4402		ATF1064
	L4401, L4402		LAU221K
	L4353		LTA102J
	L4301, L4302		LTA392J
	L4351, L4352		LTA822J
CAPACITORS			
	C1101 (0.01/400)		ACG1003
	C1002, C1003 (4700/63)		ACH1249
	C4203, C4204		CCCSL100D50
	C4353, C4354		CCCSL271K500
	C1017		CEANP470M25
	C4405, C4406		CEAS010M50
	C4311, C4312, C4403, C4415, C4416		CEAS100M50
	C4410		CEAS101M10
	C4407		CEAS101M16
	C1010		CEAS102M16
	C1007		CEAS102M35
	C1014, C1015, C4404		CEAS220M50
	C1006		CEAS222M35
	C1018, C4363, C4413, C4414		CEAS2R2M50
	C4207, C4208, C4305, C4306		CEAS330M35
	C1009		CEAS332M16
	C1016		CEAS470M10
	C4365		CEAS470M16
	C1012, C1013		CEAS470M50
	C1008		CEASR47M100
	C4401, C4402, C4409, C4411		CEASR68M50
	C4201, C4202, C4205, C4206		CKCYB471K50
	C4355, C4356		CKCYB681K50
	C1019, C4213–C4215, C4408		CKCYF473Z50
	C4419, C4420		CKCYX103M16
	C4421, C4422		CKCYX104M16
	C4417, C4418		CKCYX333M16
	C4361		CQMA103K400
	C1207–C1210		CQMA104J50
	C4303, C4304		CQMA272J50
	C4307, C4308		CQMA273J50
	C4362		CQMA333K250
	C4360		CQMA473J50
	C4209, C4210		CQMA682J50
	C4301, C4302		CQMA683J50
RESISTORS			
	VR4301, VR4302		VRTP6VS103
	VR4351, VR4352, VR4401, VR4402		VRTP6VS104
	VR4403, VR4404		VRTP6VS203
⚠	R1101 (2.2M, 1/2W)		ACN–208
	R1036		RD1/4PM100J
	R4356		RD1/4PM180J
	R1019, R1022		RD1/4PM681J
	R1031		RD1/4PM750J
⚠	R1209, R1210		RD1/4PMF6R8J
	R1102		RS2LMF390J
⚠	R4355		RS2LMF470J
⚠	R1001, R1002		RS2LMFR22J
	Other Resistors		RD1/8PM□□□J

www.manualscenter.com

Mark	No.	Description	Parts No.
	C4363		CEAS2R2M50
	C4207, C4208, C4305, C4306		CEAS330M35
	C1009		CEAS332M16
	C1018		CEAS3R3M50
	C1016		CEAS470M10
	C4365		CEAS470M16
	C1012, C1013		CEAS470M50
	C1008		CEASR47M100
	C4351, C4352		CKCYB102K50
	C4201, C4202		CKCYB471K50
	C4355, C4356		CKCYB681K50
	C4205, C4206		CKCYB821K50
	C1019, C4213–C4215		CKCYF473Z50
	C4419, C4420		CKCYX103M16
	C4421, C4422		CKCYX104M16
	C4417, C4418		CKCYX333M16
	C4551, C4552		CKPUYX122M16
	C4361		CQMA103K400
	C1207–C1210		CQMA104J50
	C4307, C4308		CQMA273J50
	C4303, C4304		CQMA332J50
	C4362		CQMA333K250
	C4360		CQMA473J50
	C4209, C4210		CQMA682J50
	C4301, C4302		CQMA683J50
RESISTORS			
	VR4351		VRTP6VS104
	R1036		RD1/4PM100J
	R4356		RD1/4PM180J
	R1019, R1022		RD1/4PM681J
	R1031		RD1/4PM750J
⚠	R1209, R1210		RD1/4PMF6R8J
	R1102		RS2LMF390J
⚠	R4355		RS2LMF470J
⚠	R1001, R1002		RS2LMFR22J
	Other Resistors		RD1/8PM□□□J
OTHERS			
	SPEAKER TERMINAL 4–P		AKE–109
	JACK		AKN–203
	CN101 40P SOCKET		AKP1085
	CN1203 CONNECTOR (5P)		KPE5

● For XR–J11/HEXJ and HBXJ

Note:
PCB assemblies of XR–J11/HEXJ and HBXJ are the same as those of XR–J11/SDXJ except for the following :

AF ASSY

SEMICONDUCTORS

Mark	No.	Description	Parts No.
	IC4401		CXA1100P
	IC1001		ICP–N15
	IC4301		NJM4558DXP
	IC4201		TC4066BP
	IC4202		UPC4570C
	Q1009		2SA1115
	Q1002, Q1005, Q1010		2SA1515
	Q1007, Q1012, Q1014, Q4305, Q4306		2SA933S
	Q1004		2SB560
	Q1013, Q2102, Q4204, Q4303, Q4304		2SC1740S
	Q4401–Q4406		2SC1740S
	Q1006, Q4352		2SC1845
	Q1008		2SC2603
	Q1003, Q1011		2SC3377
	Q4351		2SD438
	Q4209, Q4210		2SK246
	Q4201, Q4202		2SK373
	Q2101, Q4203, Q4205, Q4212, Q4213		DTA124ES
	Q4307		DTA124ES
	Q1001, Q4206, Q4211		DTC124ES
	D1010–D1012, D1018, D1019		HSS104–02
	D1024–D1026, D1029, D1030		HSS104–02
	D2101, D2102, D4201–D4204, D4301		HSS104–02
	D4303, D4304, D4351–D4354		HSS104–02
	D4401–D4403, D4405, D4406		HSS104–02
	D1023		RD5.1ESB
	D1017		RD7.5ESB
	D1006–D1009, D1013–D1016		S5566
COILS AND FILTERS			
	F4401, F4402		ATF1064
	L4401, L4402		LAU221K
	L4353		LTA102J
	L4301, L4302		LTA392J
	L4351, L4352		LTA822J
CAPACITORS			
	C1101 (0.01/400)		ACG1003
	C1002, C1003 (2200/56)		ACH1250
	C4203, C4204		CCCSL100D50
	C4353, C4354		CCCSL271K500
	C1017		CEANP470M25
	C4405, C4406		CEAS010M50
	C4311, C4312, C4403, C4415, C4416		CEAS100M50
	C4410		CEAS101M10
	C4407		CEAS101M16
	C1010		CEAS102M16
	C1007		CEAS102M35
	C1014, C1015, C4404		CEAS220M50
	C1006		CEAS222M35
	C4363, C4413, C4414		CEAS2R2M50
	C4207, C4208, C4305, C4306		CEAS330M35
	C1009		CEAS332M16
	C1018		CEAS3R3M50
	C1016		CEAS470M10
	C4365		CEAS470M16
	C1012, C1013		CEAS470M50
	C1008		CEASR47M100
	C4401, C4402, C4409, C4411		CEASR68M50
	C4201, C4202, C4205, C4206		CKCYB471K50
	C4355, C4356		CKCYB681K50
	C1019, C4213–C4215, C4408		CKCYF473Z50
	C4419, C4420		CKCYX103M16
	C4421, C4422		CKCYX104M16
	C4417, C4418		CKCYX333M16
	C4361		CQMA103K400
	C1207–C1210		CQMA104J50
	C4303, C4304		CQMA272J50
	C4307, C4308		CQMA273J50
	C4362		CQMA333K250
	C4360		CQMA473J50
	C4209, C4210		CQMA682J50
	C4301, C4302		CQMA683J50

www.manualscenter.com

Mark	No.	Description	Parts No.
	RESISTORS		
	VR4301, VR4302		VRTP6VS103
	VR4351, VR4352, VR4401, VR4402		VRTP6VS104
	VR4403, VR4404		VRTP6VS203
	R1036		RD1/4PM100J
	R4356		RD1/4PM180J
	R1019, R1022		RD1/4PM681J
	R1031		RD1/4PM750J
⚠	R1209, R1210		RD1/4PMF6R8J
	R1102		RS2LMF390J
⚠	R4355		RS2LMF470J
⚠	R1001, R1002		RS2LMFR22J
	Other Resistors		RD1/8PM□□□J
	OTHERS		
	SPEAKER TERMINAL 4-P		AKE-109
	JACK		AKN-203
	CN101	40P SOCKET	AKP1085
	CN1203	CONNECTOR (5P)	KPE5
	CN4001	3P PLUG	KM250MA3
	CN4002	5P PLUG	KM250MA5

DISPLAY ASSY

Mark	No.	Description	Parts No.
	SEMICONDUCTORS		
	IC3101, IC3102		BA3812L
	IC3501		NJM4558DXP
	IC1901		PDG110A
	Q1708		2SA933S
	Q1901, Q3501, Q3502		2SC1740S
	Q1903		DTC124ES
	Q1703-Q1707, Q1902		DTC143ES
	D1701-D1706		AEL1148
	D1707, D1801-D1803, D1901-D1903		HSS104-02
	D1905, D3101, D3102		HSS104-02
	COILS AND FILTERS		
	L1901		LAU220K
	SWITCHES		
	S1801-S1803, S1806, S1815-S1818		ASG1034
	S1821-S1824		ASG1034
	CAPACITORS		
	C1902		ACH1246
	C3125, C3126		CCCSL121J50
	C1906, C1907, C1912, C3507		CEAS010M50
	C1910		CEAS100M50
	C1904		CEAS221M10
	C1901, C3001-C3004		CEAS470M16
	C3101, C3102, C3127, C3128		CEAS4R7M50
	C3109, C3110		CEASR15M50
	C3117, C3118		CEASR68M50
	C1908		CKCYB102K50
	C3113, C3114		CKCYB182K50
	C3121, C3122		CKCYB391K50
	C3107, C3108		CKCYB392K50
	C1903, C1905, C1913, C2201, C2202		CKCYF473Z50
	C1909		CKCYX104M25
	C3111, C3112		CKCYX153M16
	C3105, C3106		CKCYX183M16
	C3115, C3116		CKCYX393M16
	C1911		CKCYX473M25
	C3103, C3104		CKCYX683M16
	C3501, C3502		CQMA223J50
	C3503, C3504		CQMA473J50
	C3119, C3120		CQMA682J50

Mark	No.	Description	Parts No.
	RESISTORS		
	VR4101		ACP1055
	VR3101-VR3105	(100K-B5×2)	ACU1030
	Other Resistors		RD1/8PM□□□J
	OTHERS		
	V1701	FL TUBE	AAV7004
	CN102	40P SOCKET	AKP1085
	X1901	CRYSTAL RESONATOR	ASS1015
	REMOTE RECEIVER UNIT		AXX1023

TAPE IND. ASSY

Mark	No.	Description	Parts No.
	SEMICONDUCTORS		
	Q4701		2SA933S
	D4701		AEL1148
	D4702		HSS104-02
	SWITCH		
	S4801		ASG1034
	RESISTORS		
	All Resistors		RD1/8PM□□□J

● For XR-J11/HEWZIXJ

Note:
PCB assemblies of XR-J11/HEWZIXJ are the same as those of XR-J11/SDXJ except for the following :

AF ASSY

Mark	No.	Description	Parts No.
	SEMICONDUCTORS		
	IC4401		CXA1100P
	IC1001		ICP-N15
	IC4301		NJM4558DXP
	IC4201		TC4066BP
	IC4202		UPC4570C
	Q1009		2SA1115
	Q1002, Q1005, Q1010		2SA1515
	Q1007, Q1012, Q1014, Q4305, Q4306		2SA933S
	Q1004		2SB560
	Q1013, Q2102, Q4204, Q4303, Q4304		2SC1740S
	Q4401-Q4406		2SC1740S
	Q1006, Q4352		2SC1845
	Q1008		2SC2603
	Q1003, Q1011		2SC3377
	Q4351		2SD438
	Q4209, Q4210		2SK246
	Q4201, Q4202		2SK373
	Q2101, Q4203, Q4205, Q4212, Q4213		DTA124ES
	Q4307		DTA124ES
	Q1001, Q4206, Q4211		DTC124ES
	D1010-D1012, D1018, D1019		HSS104-02
	D1024-D1026, D1029, D1030		HSS104-02
	D2101, D2102, D4201-D4204, D4301		HSS104-02
	D4303, D4304, D4351-D4354		HSS104-02
	D4401-D4403, D4405, D4406		HSS104-02
	D1023		RD5.1ESB
	D1017		RD7.5ESB
	D1006-D1009, D1013-D1016		S5566

www.manualscenter.com

Mark	No.	Description	Parts No.
COILS AND FILTERS			
	L1101		ATF1006
	F4401, F4402		ATF1064
	L1201–L1204	(5.3UH)	ATH–059
	L4401, L4402		LAU221K
	L4353		LTA102J
	L4301, L4302		LTA392J
	L4351, L4352		LTA822J
CAPACITORS			
	C1101, C1102	(0.01/400)	ACG1003
	C1002, C1003	(2200/56)	ACH1250
	C4203, C4204		CCCSL100D50
	C4353, C4354		CCCSL271K500
	C1203, C1204		CCDSL121J50
	C1017		CEANP470M25
	C4405, C4406		CEAS010M50
	C4311, C4312, C4403, C4415, C4416		CEAS100M50
	C4410		CEAS101M10
	C4407		CEAS101M16
	C1010		CEAS102M16
	C1007		CEAS102M35
	C1014, C1015, C4404		CEAS220M50
	C1006		CEAS222M35
	C4363, C4413, C4414		CEAS2R2M50
	C4207, C4208, C4305, C4306		CEAS330M35
	C1009		CEAS332M16
	C1018		CEAS3R3M50
	C1016		CEAS470M10
	C4365		CEAS470M16
	C1012, C1013		CEAS470M50
	C1008		CEASR47M100
	C4401, C4402, C4409, C4411		CEASR68M50
	C4201, C4202, C4205, C4206		CKCYB471K50
	C4355, C4356		CKCYB681K50
	C1019, C4213–C4215, C4408		CKCYF473Z50
	C4419, C4420		CKCYX103M16
	C4421, C4422		CKCYX104M16
	C4417, C4418		CKCYX333M16
	C4361		CQMA103K400
	C1207–C1210		CQMA104J50
	C4303, C4304		CQMA272J50
	C4307, C4308		CQMA273J50
	C4362		CQMA333K250
	C4360		CQMA473J50
	C4209, C4210		CQMA682J50
	C4301, C4302		CQMA683J50
	C1201, C1202		CQMXA103J100
RESISTORS			
	VR4301, VR4302		VRTP6VS103
	VR4351, VR4352, VR4401, VR4402		VRTP6VS104
	VR4403, VR4404		VRTP6VS203
	R1036, R1201, R1202		RD1/4PM100J
	R1203, R1204		RD1/4PM101J
	R4356		RD1/4PM180J
	R1019, R1022		RD1/4PM681J
	R1031		RD1/4PM750J
⚠	R1209, R1210		RD1/4PMF6R8J
	R1102		RS2LMF390J
⚠	R4355		RS2LMF470J
⚠	R1001, R1002		RS2LMFR22J
	Other Resistors		RD1/8PM□□□J

Mark	No.	Description	Parts No.
OTHERS			
	SPEAKER TERMINAL 4–P		AKE–109
	JACK		AKN–203
	CN101	40P SOCKET	AKP1085
	CN1203	CONNECTOR (5P)	KPE5
	CN4001	3P PLUG	KM250MA3
	CN4002	5P PLUG	KM250MA5

FUNCTION ASSY

SEMICONDUCTORS			
	IC2101, IC2103		NJM4558DXP
	IC2102		TC4052BP
CAPACITORS			
	C2103, C2104		CEAS3R3M50
	C2109, C2110		CEAS470M16
	C2111, C2112		CKCYF473Z50
	C2118–C2125		CKPUYB101K50
	C2101, C2102, C2116, C2117		CKPUYB471K50
	C2128, C2129		CKPUYF473Z16
	C2105, C2106		CKPUYX152N16
	C2107, C2108		CKPUYX562N16
	C2131, C2132		CKDYF473Z50
RESISTORS			
	All Resistors		RD1/8PM□□□J
OTHERS			
	PIN JACK (4P)		AKB1124

DISPLAY ASSY

SEMICONDUCTORS			
	IC3101, IC3102		BA3812L
	IC3501		NJM4558DXP
	IC1901		PDG110A
	Q1708		2SA933S
	Q1901, Q3501, Q3502		2SC1740S
	Q1903		DTC124ES
	Q1703–Q1707, Q1902		DTC143ES
	D1701–D1706		AEL1148
	D1707, D1801–D1803, D1901–D1903		HSS104–02
	D1905, D3101, D3102		HSS104–02
COILS AND FILTERS			
	L1901		LAU120K
SWITCHES			
	S1801–S1803, S1806, S1815–S1818		ASG1034
	S1821–S1824		ASG1034
CAPACITORS			
	C1902		ACH1246
	C3303, C3304, C3505, C3506		CCCSL101J50
	C3125, C3126		CCCSL121J50
	C1906, C1907, C1912, C3507		CEAS010M50
	C1910		CEAS100M50
	C1904		CEAS221M10
	C1901, C3001–C3004		CEAS470M16
	C3101, C3102, C3127, C3128		CEASR47M50
	C3109, C3110		CEASR15M50
	C3117, C3118		CEASR68M50
	C1908		CKCYB102K50
	C3113, C3114		CKCYB182K50
	C3121, C3122		CKCYB391K50
	C3107, C3108		CKCYB392K50
	C1903, C1905, C1913, C2201, C2202		CKCYF473Z50

www.manualscenter.com

Mark	No.	Description	Parts No.
	C1909		CKCYX104M25
	C3111, C3112		CKCYX153M16
	C3105, C3106		CKCYX183M16
	C3115, C3116		CKCYX393M16
	C1911		CKCYX473M25
	C3103, C3104		CKCYX683M16
	C3501, C3502		CQMA223J50
	C3503, C3504		CQMA473J50
	C3119, C3120		CQMA682J50
	RESISTORS		
	VR4101		ACP1055
	VR3101 – VR3105	(100K – B5 × 2)	ACU1030
	Other Resistors		RD1/8PM□□□J
	OTHERS		
	V1701	FL TUBE	AAV7004
	CN102	40P SOCKET	AKP1085
	X1901	CRYSTAL RESONATOR	ASS1015
	REMOTE RECEIVER UNIT		AXX1023
	VOLUME ASSY		
	SEMICONDUCTORS		
	IC1501		NJM4558DXP
	IC1502		TA8409S
	CAPACITORS		
	C1509, C1510		CCCSL101J50
	C1513, C1514		CCDSL101J50
	C1507		CEAS101M25
	C1501 – C1504		CEAS4R7M50
	C1511, C1512		CEASR22M50
	C1515, C1516		CFTXA683J50
	C1508		CKCYF473Z50
	C1505, C1506		CKCYX104M25
	C1517, C1518		CKDYB471K50
	RESISTORS		
	VR1501	(100K – 3B*2)	ACX1089
	Other Resistors		RD1/8PM□□□J
	TAPE IND. ASSY		
	SEMICONDUCTORS		
	Q4701		2SA933S
	D4701		AEL1148
	D4702		HSS104 – 02
	SWITCH		
	S4801		ASG1034
	RESISTORS		
	All Resistors		RD1/8PM□□□J
	HEAD PHONE ASSY		
	CAPACITORS		
	C1205, C1206		CQMXA473J100
	C1207		CKDYX223M25
	RESISTORS		
	R1205, R1206		RS2LMF331J
	R1209		RD1/8PM100J
	OTHERS		
	JACK		AKN1010

Mark	No.	Description	Parts No.
	FM/AM TUNER MODULE		
	SEMICONDUCTORS		
	IC6201		LA1836M
	IC6202		LM7001J
	Q6102		2SC2223
	Q6203		2SC2235
	Q6202, Q6218		2SC2712
	Q6103, Q6214		2SC2714
	Q6201		2SK208
	Q6104, Q6105		2SK302
	Q6101		3SK194
	Q6204		XDA124EK
	Q6217		XDC124EK
	D6101 – D6104		1SV228
	COILS AND FILTERS		
	L6106		ATC1003
	L6105		ATC1015
	L6101		ATC1016
	L6102		ATC1017
	L6103		ATC1018
	L6104		ATC1019
	T6101		ATE – 063
	L6207	(10.7MHZ)	ATE1013
	F6204		ATF – 107
	F6203		ATF – 119
	F6202	(450KHZ)	ATF1145
	F6205		ATF1152
	L6107		ATH1043
	L6202, L6203, L6208		LCTA2R2J3225
	L6205		LCTA680J3225
	CAPACITORS		
	C6204, C6234, C6236, C6269		ACG1051
	C6235		ACG1052
	C6120		CCSCH060D50
	C6229		CCSCH821J50
	C6111, C6122		CCSQCH010C50
	C6112		CCSQCH020C50
	C6118		CCSQCH080D50
	C6113		CCSQCH101J50
	C6116, C6208, C6221, C6222		CCSQCH150J50
	C6117		CCSQCH330J50
	C6272		CCSQSL470J50
	C6105		CCSQSL471J50
	C6101		CCSQTH110J50
	C6119		CCSQTH150J50
	C6109		CCSQTH270J50
	C6107, C6110		CCSQTH300J50
	C6106		CCSQTH330J50
	C6261		CEAS010M50
	C6224, C6231, C6233, C6246, C6262		CEAS100M50
	C6216, C6217		CEAS330M16
	C6219		CEAS470M10
	C6243 – C6245		CEAS470M16
	C6227		CEAS470M25
	C6238, C6248		CEJA100M16
	C6249, C6250		CEJA4R7M35
	C6215		CFTXA103J50
	C6214		CFTXA224J50
	C6115, C6125, C6126, C6207		CKSQYB102K50
	C6102, C6114, C6121, C6124, C6210		CKSQYB103K50
	C6264		CKSQYB103K50

www.manualscenter.com

Mark	No.	Description	Parts No.
	C6247		CKSQYB122K50
	C6213		CKSQYB223K50
	C6230		CKSQYB273K50
	C6228		CKSQYB472K50
	C6209, C6237, C6267		CKSQYB473K50
	C6251, C6252		CKSQYB562K50
	C6212, C6218		CKSQYF103Z50
	C6220, C6226, C6239, C6242		CKSQYF223Z50
	C6255, C6256		CKSQYF223Z50
	C6225, C6241		CKSQYF473Z50
	C6123		CKSYB103K50
	C6232		CKSYB273K50
	C6223		CKSYF103Z50
	C6263		CKSYF473Z50
RESISTORS			
	VR6201		ACP1055
	VR6202		VRTB6VS223
	R6299, R6300		RD1/8PM102J
	R6115, R6119, R6123, R6127, R6129		RS1/8S000J
	R6268–R6271, R6275, R6276, R6278		RS1/8S000J
	R6283, R6284, R6293, R6294, R6297		RS1/8S000J
	R6302, R6303		RS1/8S000J
	R6243, R6244		RS1/8S101J
	R6211, R6239		RS1/8S103J
	R6237		RS1/8S122J
	R6209		RS1/8S221J
	R6112		RS1/8S473J
	Other Resistors		RS1/10S□□□J
OTHERS			
	BN6201	2P TERMINAL WITH PAL	AKA1017
	X6203	CRYSTAL RESONATOR	ASS1042
	X6201	CRYSTAL RESONATOR	ASS1066
	X6202	CERAMIC RESONATOR	ATF1027
	AM RF TUNING BLOCK		AXX1025

www.manualscenter.com

CHAPTER 2

2.1 PACKING AND EXPLODED VIEWS

2.1.1 PACKING, EXTERIOR AND POWER MODULE (FOR ALL MODELS)

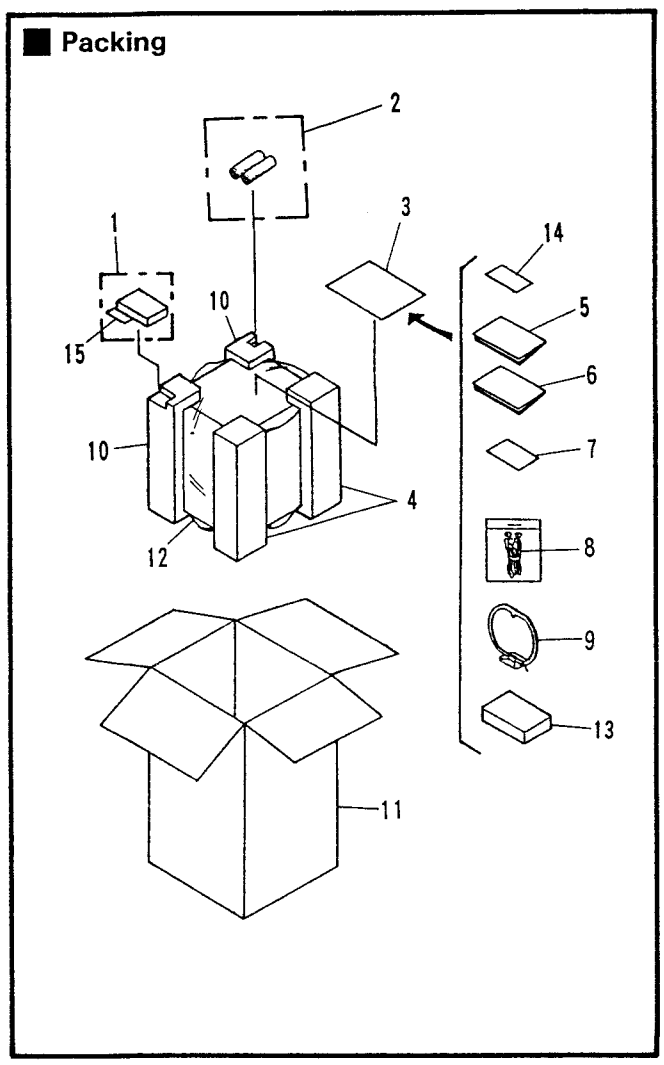

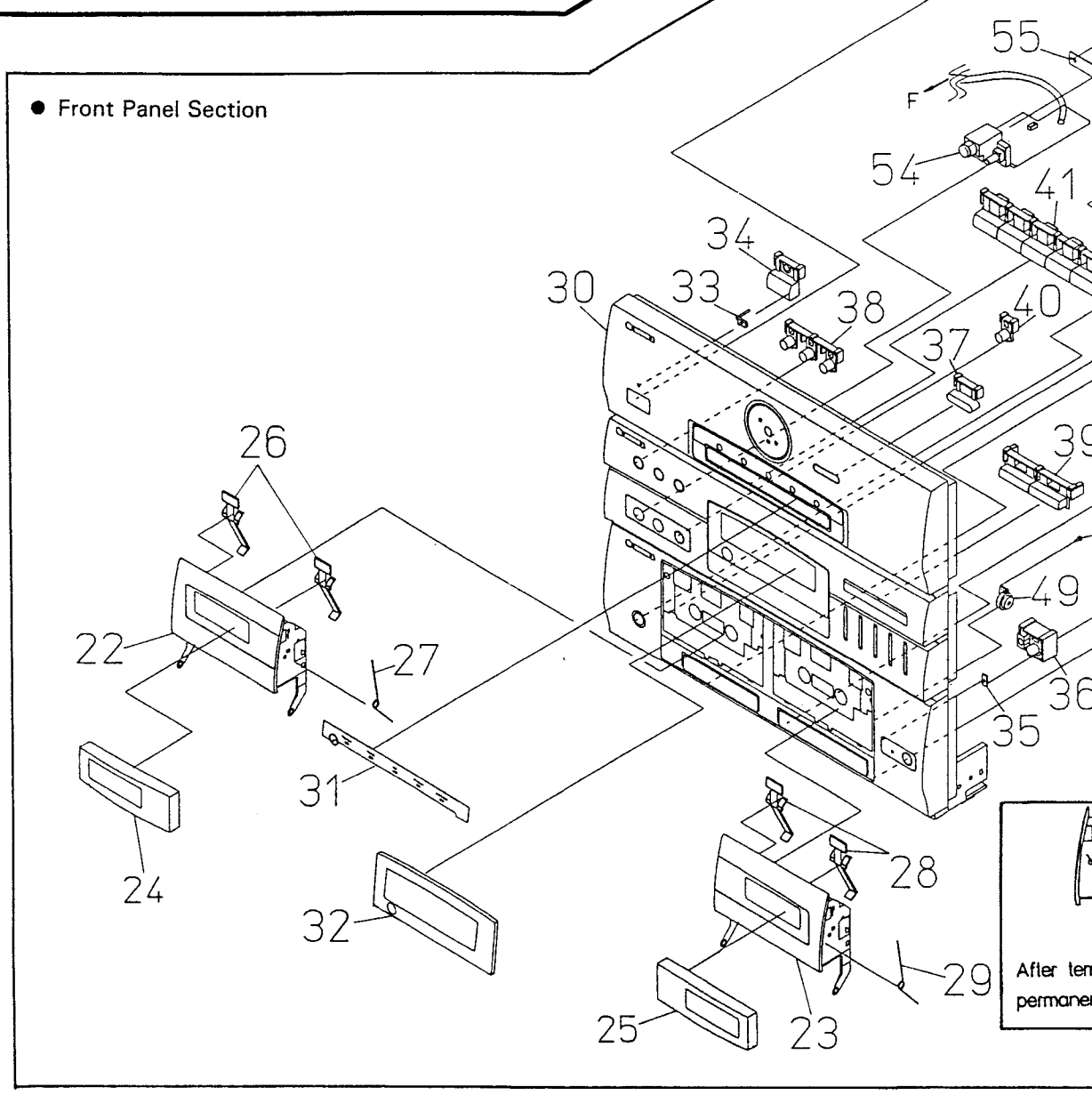

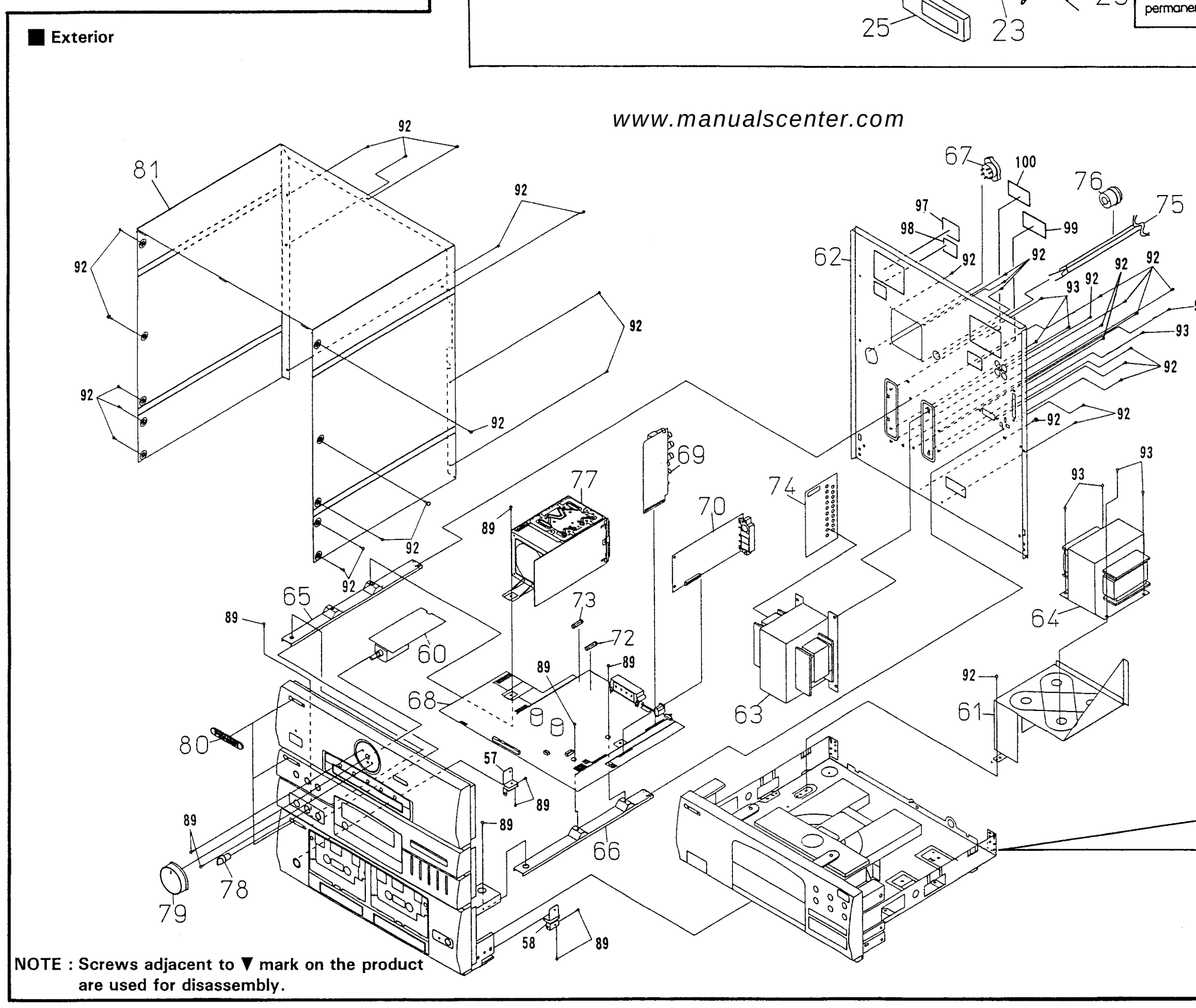

www.manualscenter.com

NOTE : Screws adjacent to ▼ mark on the product are used for disassembly.

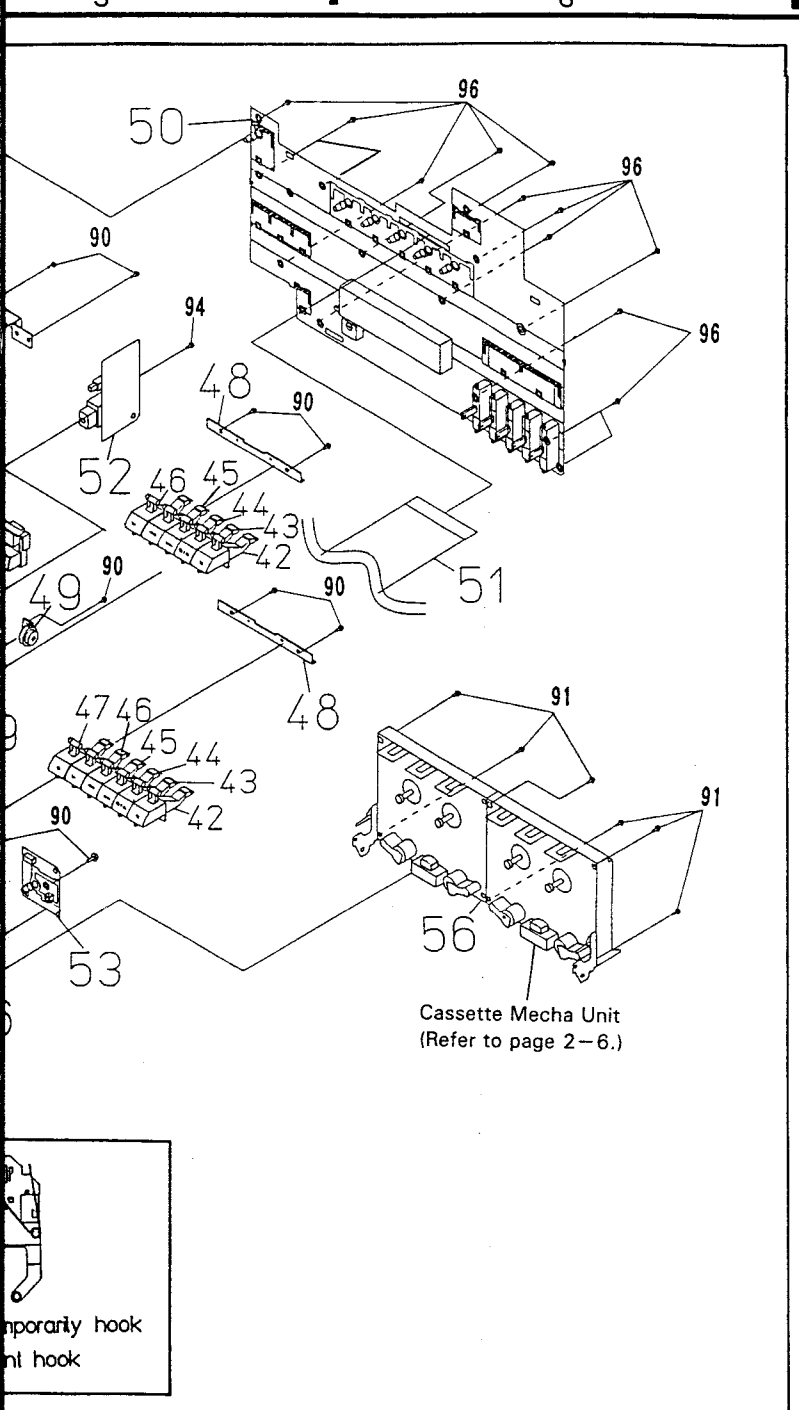

Power Module Section

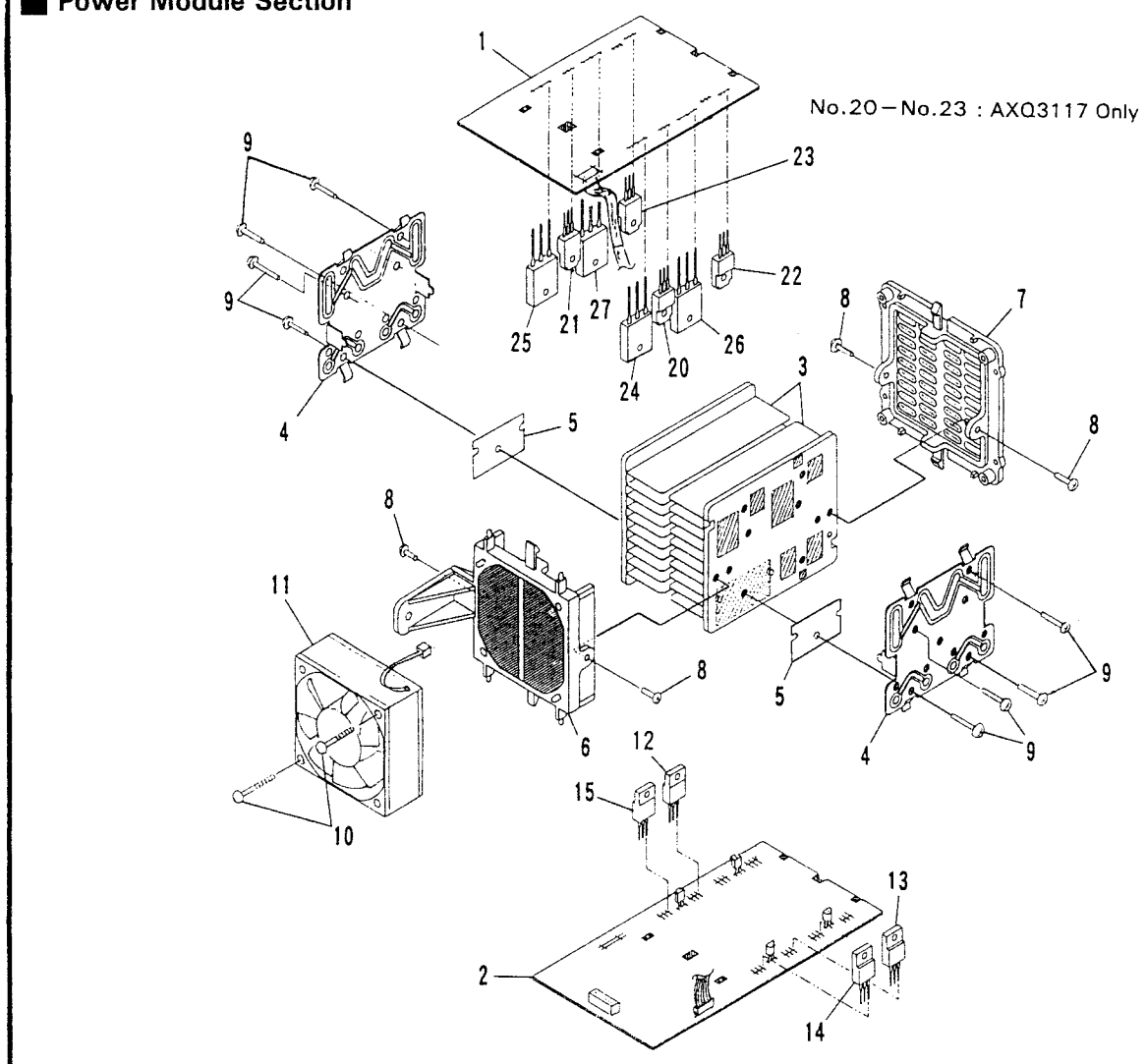

Note: Ensure that silicon grease does not adhere to the MOLD A (No. 6) and MOLD B (No. 7).

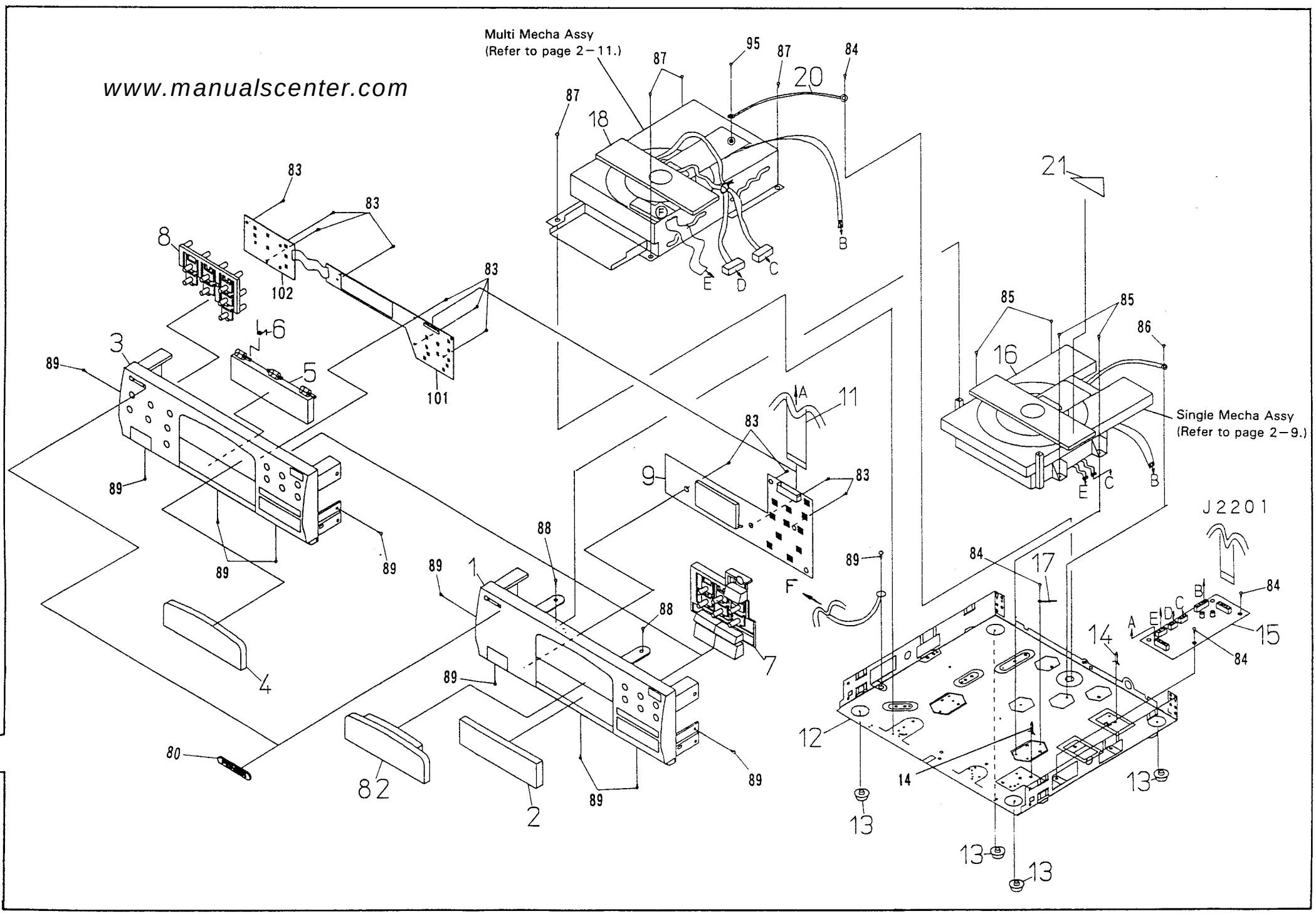

www.manualscenter.com

2.1.2 CASSETTE MECHA UNIT (FOR ALL MODELS)

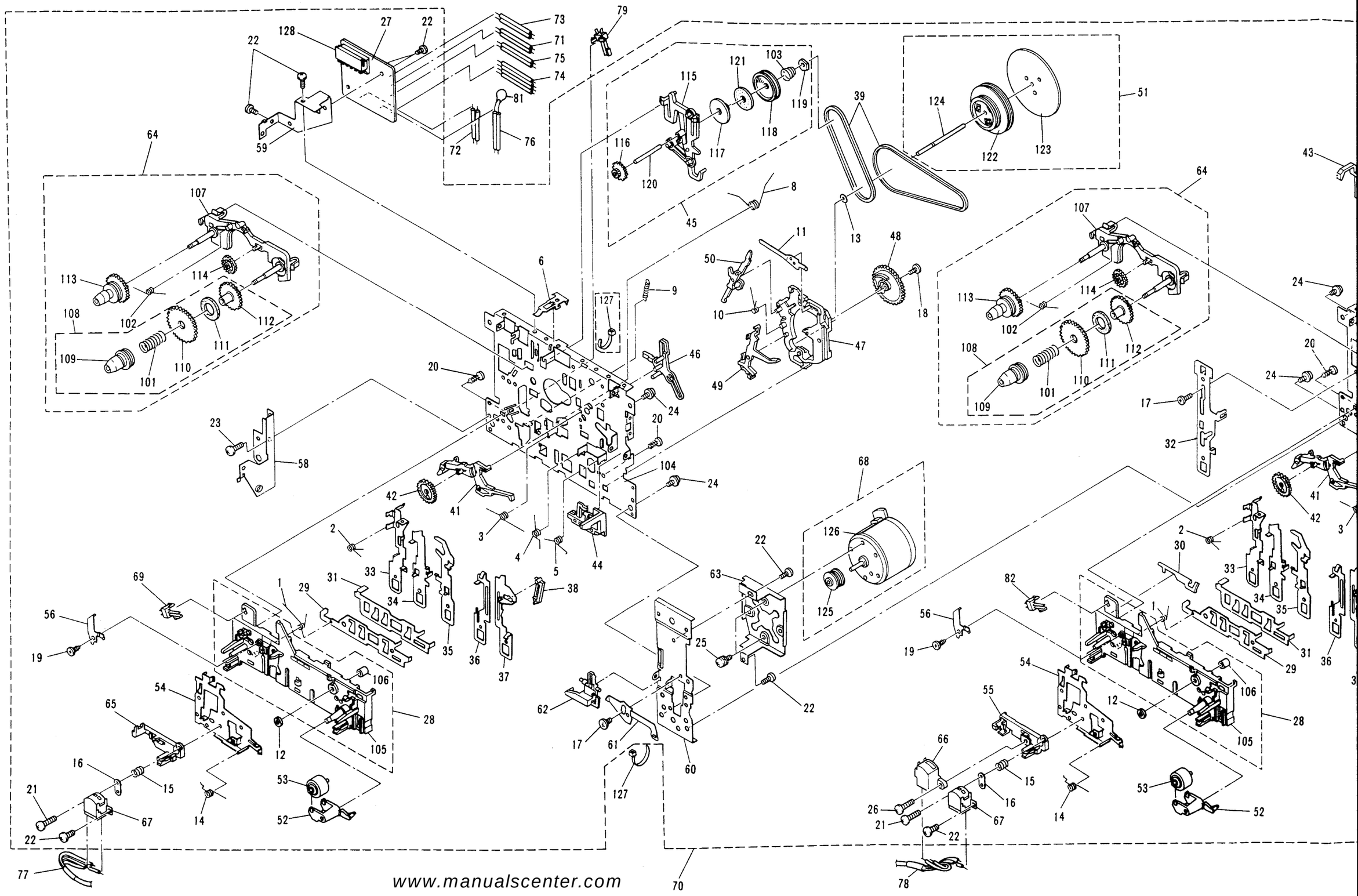

www.manualscenter.com

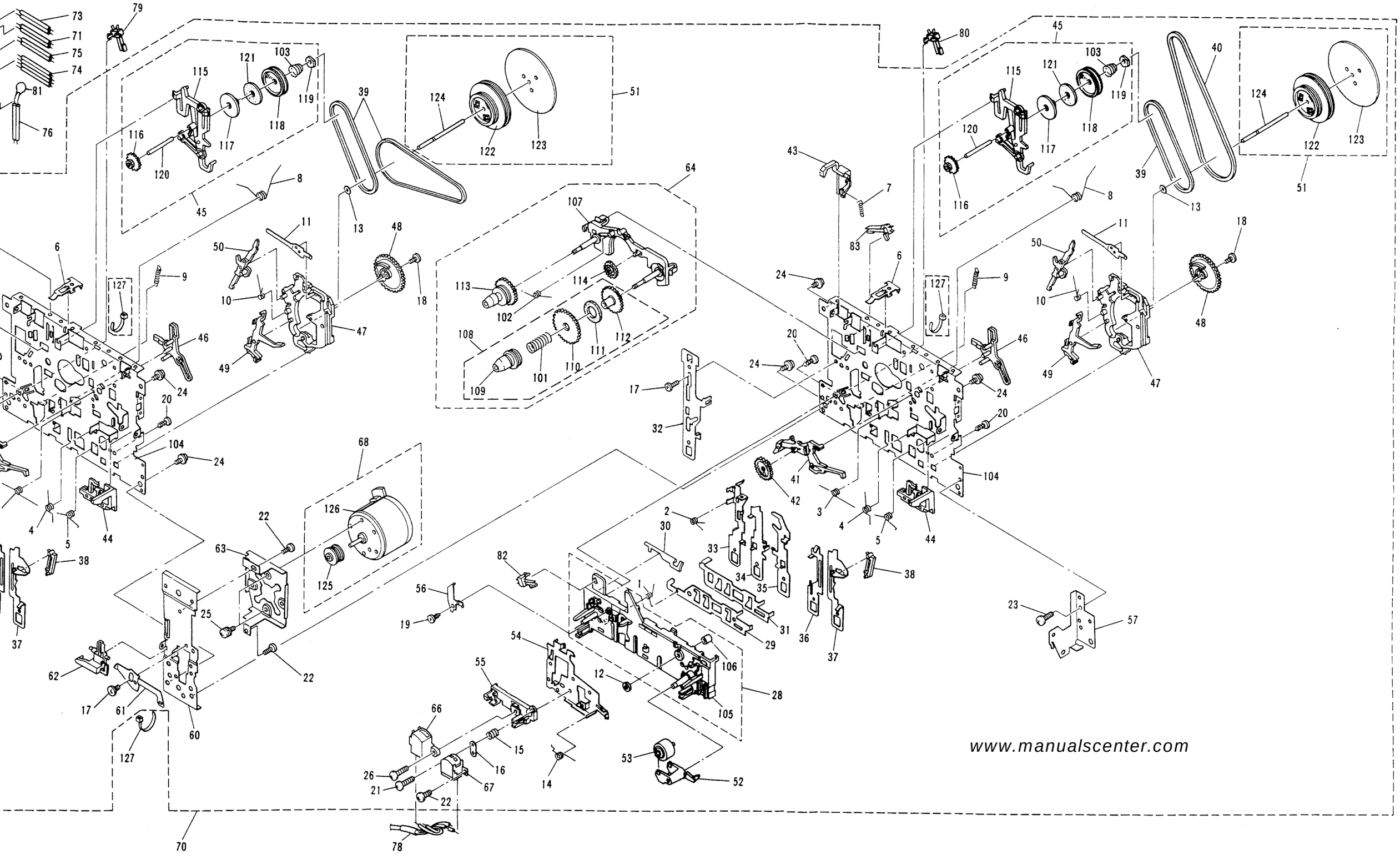
73
71
75
74
81
76
79
115
121
103
119
118
117
116
120
45
8
39
124
122
123
51
13
48
18
64
107
113
114
102
108
109
101
110
111
112
11
50
10
9
127
6
46
49
47
24
20
104
4
5
44
38
37
68
126
125
22
63
25
62
17
61
60
32
56
19
82
54
55
66
26
21
15
16
67
14
53
52
70
78
43
7
83
80
30
2
33
34
35
31
29
1
106
105
28
12
41
42
3
36
23
57
www.manualscenter.com

2.1.3 SINGLE MECHA ASSY (FOR XR−J22 AND XR−J11)

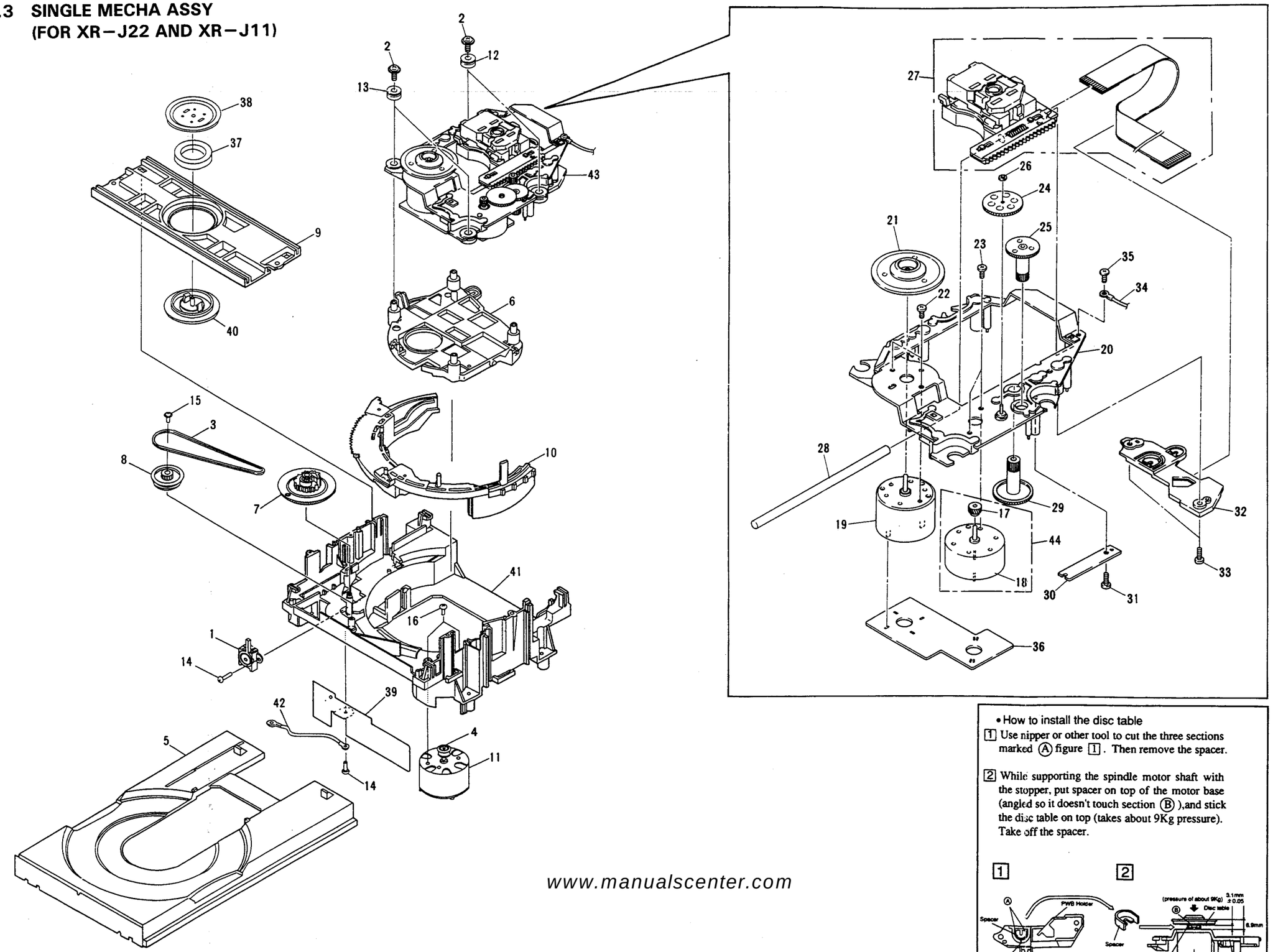

• How to install the disc table

1 Use nipper or other tool to cut the three sections marked Ⓐ figure 1. Then remove the spacer.

2 While supporting the spindle motor shaft with the stopper, put spacer on top of the motor base (angled so it doesn't touch section Ⓑ),and stick the disc table on top (takes about 9Kg pressure). Take off the spacer.

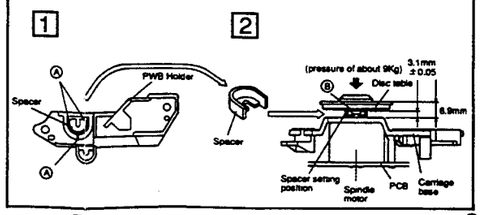

www.manualscenter.com

2.1.4 MULTI MECHA ASSY (FOR XR−J22M AND XR−J11M)

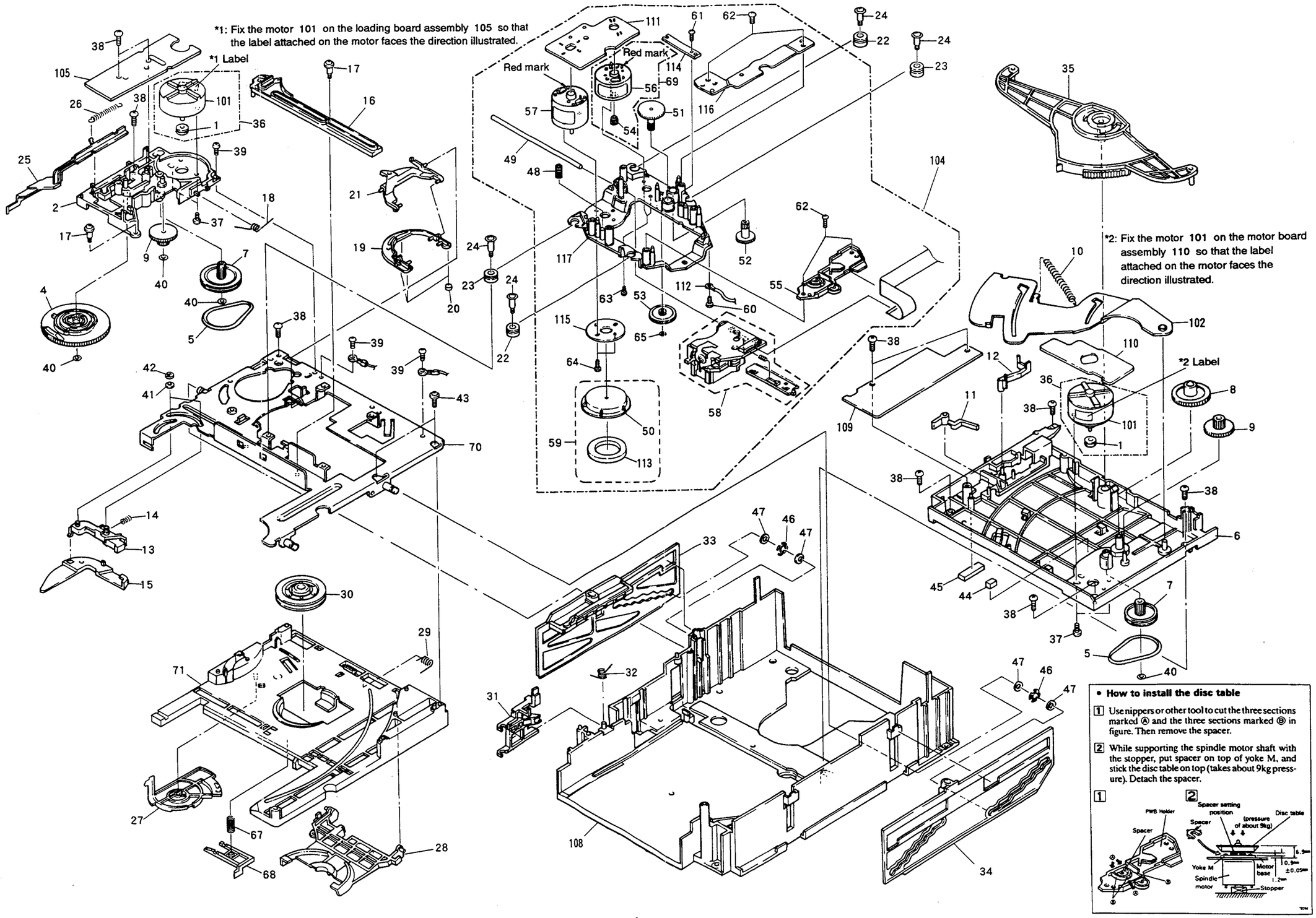

www.manualscenter.com

2.2 SCHEMATIC AND PCB CONNECTION DIAGRAMS

1. OVERALL SCHEMATIC DIAGRAM

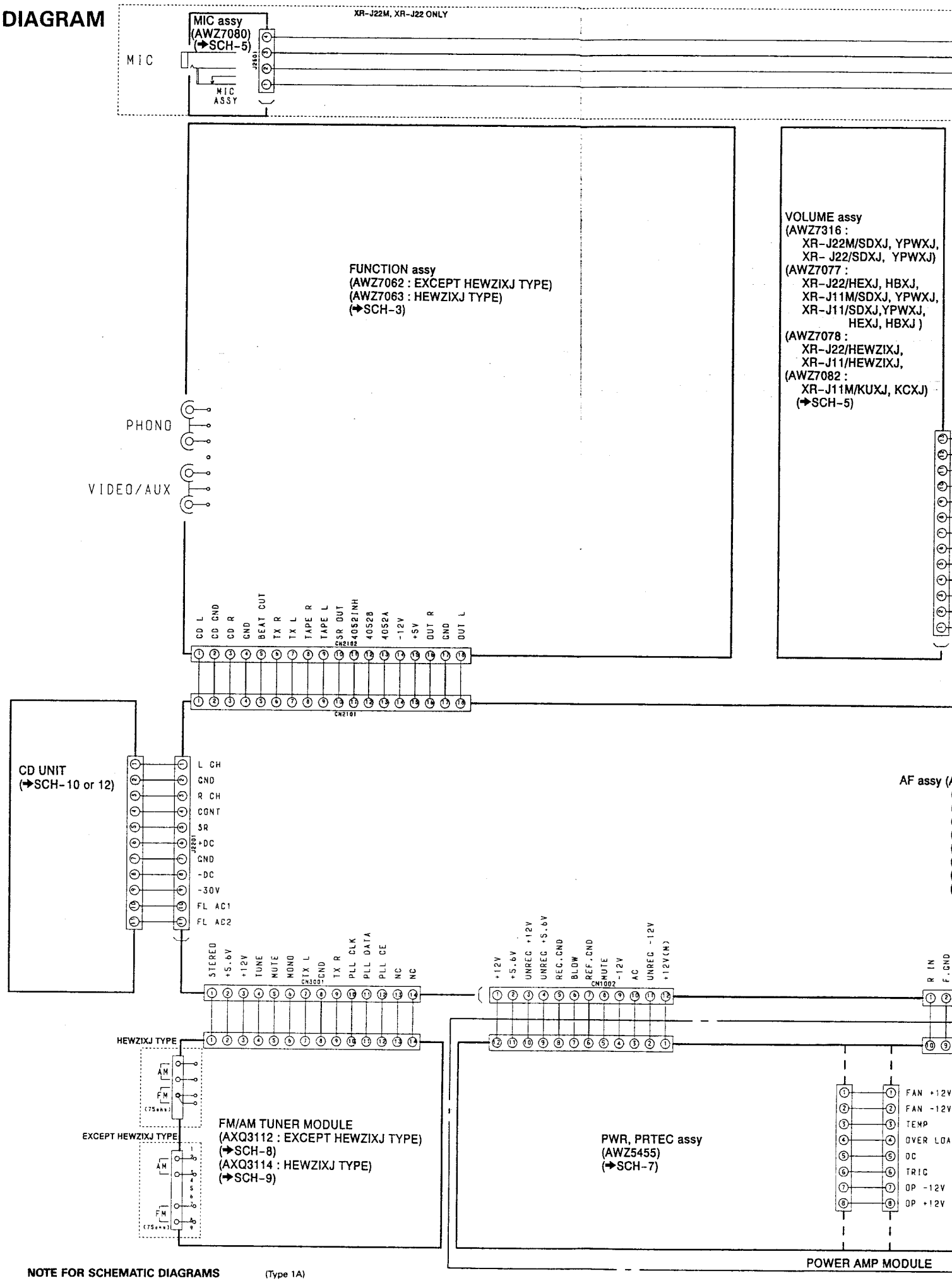

NOTE FOR SCHEMATIC DIAGRAMS (Type 1A)

1. **When ordering service parts, be sure to refer to "PARTS LIST of EXPLODED VIEWS" or "PCB PARTS LIST".**
2. **Since these are basic circuits, some parts of them or the values of some components may be changed for improvement.**
3. **RESISTORS:**
   Unit: k:kΩ, M:MΩ, or Ω unless otherwise noted.
   Rated power: 1/4W, 1/6W, 1/8W, 1/10W unless otherwise noted.
   Tolerance: (F): ±1%, (G): ±2%, (K): ±10%, (M): ±20% or ±5% unless otherwise noted.
4. **CAPACITORS:**
   Unit: p:pF or μF unless otherwise noted.
   Ratings: capacitor (μF)/ voltage (V) unless otherwise noted.
   Rated voltage: 50V except for electrolytic capacitors.
5. **COILS:**
   Unit: m:mH or μH unless otherwise noted.
6. **VOLTAGE AND CURRENT:**
   ▭V : Signal voltage at rated output.
   ▭ or ← V :
   DC voltage (V) at no input signal unless otherwise noted.
   Value in ( ) is DC voltage at rated power.
   ⇦ mA or ← mA :
   DC current at no input signal unless otherwise noted.
7. **OTHERS:**
   • ⊘ or ⊘ : Adjusting point.
   • ◁ : Measurement point.
   • The ⚠ mark found on some component parts indicates the importance of the safety factor of the parts. Therefore, when replacing, be sure to use parts of identical designation.
8. **SCH—□ ON THE SCHEMATIC DIAGRAM:**
   • SCH—□ indicates the drawing number of the schematic diagram. (SCH stands for schematic diagram.)
9. **SWITCHES** (Underline indicates switch position):

S1 VOLTAGE SELECTOR
(SDXJ TYPE ONLY)
AC110/120-127V/220V/240V

AF assy
S4001 9k/10k (SDXJ TYPE ONLY)

TAPE IND assy
(EXCEPT XR-J11M/SDXJ, YPWXJ,
XR-J11/SDXJ, YPWXJ)
S4801 DOLBY NR

DISPLAY assy
S1801 BAND
S1802 MEMORY
S1803 FREQ/ST
S1804 ST. WIDE
(XR-J22M, XR-J22 ONLY)
S1806 POWER
S1815 TUNER
S1816 FREQ +
S1817 FREQ −
S1818 VIDEO
S1821 S. BASS
S1822 TAPE
S1823 CD
S1824 PHONO

FUNCTION PCB assy 1 (CD)
(XR-J22M, XR-J11M)
S701 4
S703 ◀◀
S704 5
S705 EJECT
S706 ▶ / ❚❚
S707 2
S710 6
S711 ▶▶
S712 STOP
S713 1
S716 3

FUNCTION PCB assy 2 (CD)
(XR-J22M, XR-J11M)
S702 PGM
S708 RND
S709 REP
S714 TIME
S715 HI-LITE
S717 EDIT
S718 DEL

FUNCTION PCB assy (CD)
(XR-J22, XR-J11)
S701 REP
S702 TIME
S703 RAND
S704 EDIT
S705 ▶ / ❚❚
S706 ■
S707 ▶▶ / ▶▶|
S708 ◀◀ / |◀◀
S709 O/C
S710 PGM
S711 HI-LITE

Line Voltage Selection

Line Voltage can be changed by the following mo

1. Disconnect the AC power cord.
2. Remove the cover.
3. Change the connection of the power transformer

Part No.	Description
AAX−193	220V label
AAX−192	240V label

www.manualscenter.com

SCH−1 OVERALL SCHEMATIC DIAGRAM

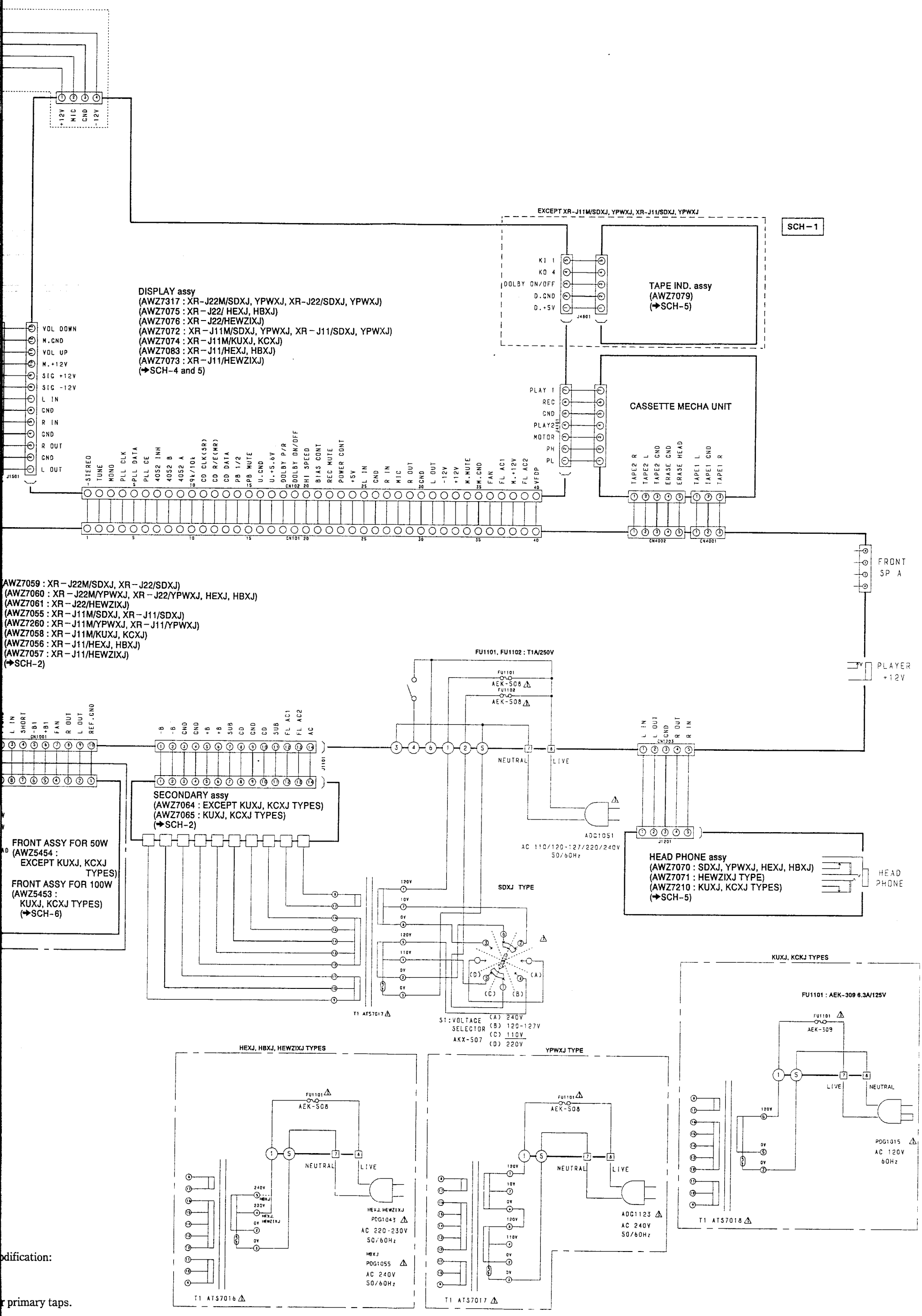

odification:

r primary taps.

www.manualscenter.com

OVERALL SCHEMATIC DIAGRAM **SCH-1**

2. AF ASSY, SECONDARY ASSY AND FUNCTION ASSY

2.1 AF ASSY and SECONDRY ASSY

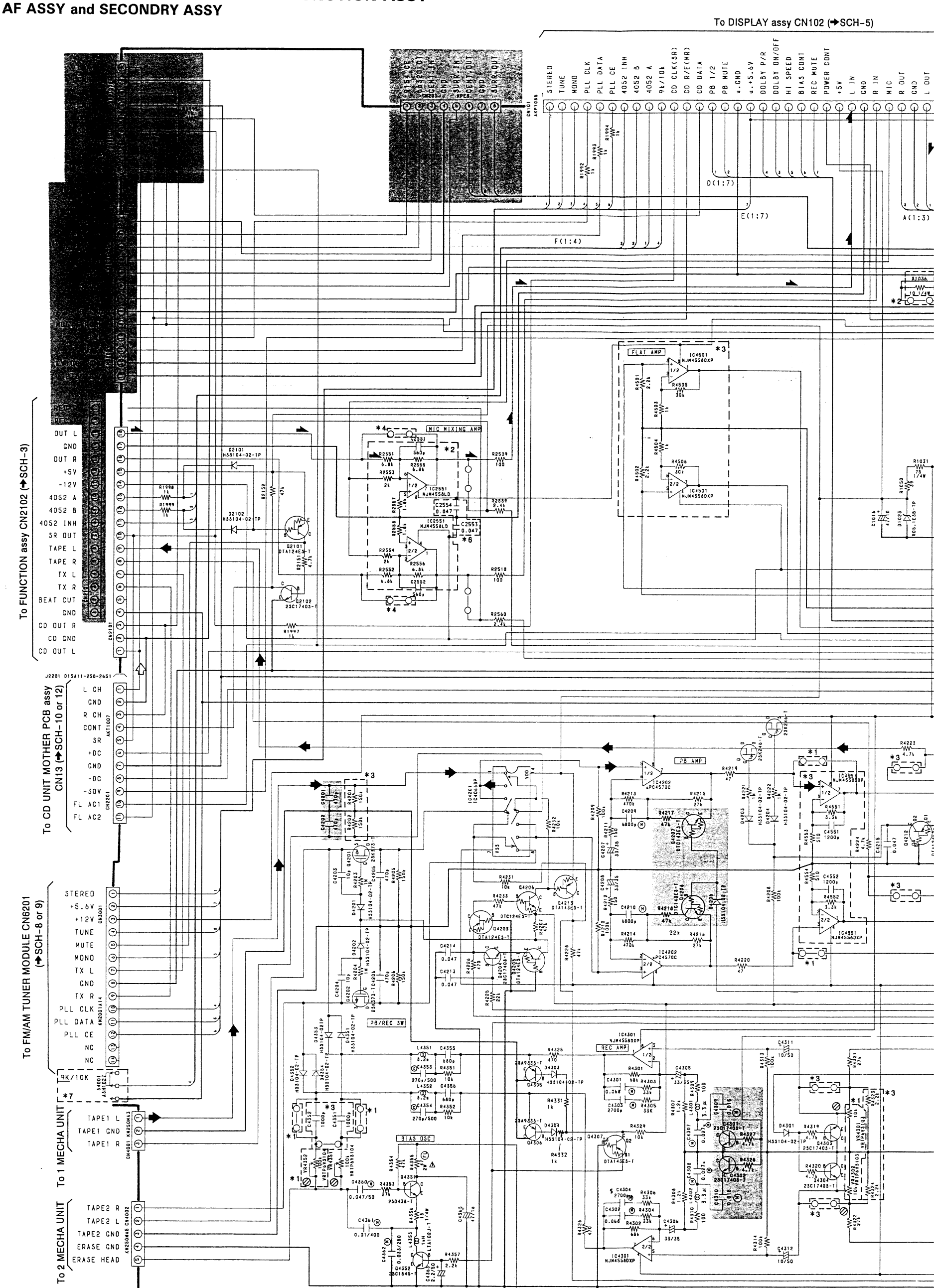

AF assy (AWZ7059 : XR−J22M/SDXJ, XR−J22/SDXJ)
(AWZ7060 : XR−J22M/YPWXJ, XR−J22/YPWXJ, HEXJ, HBXJ)
(AWZ7061 : XR−J22/HEWZIXJ)
(AWZ7055 : XR−J11M/SDXJ, XR−J11/SDXJ)
(AWZ7260 : XR−J11M/YPWXJ, XR−J11/YPWXJ)
(AWZ7058 : XR−J11M/KUXJ, KCXJ)
(AWZ7056 : XR−J11/HEXJ, HBXJ)
(AWZ7057 : XR−J11/HEWZIXJ)

	XR-J22M. XR-J22. XR-J11/HEXJ. HBXJ. HEWZIXJ	XR-J11M/SDXJ. YPWXJ XR-J11/SDXJ. YPWXJ	XR-J11M/ KUXJ. KCXJ
IC4202	UPC4570C	NJM4558DXP	UPC4570C
R1028	1k	1k	2.7k
R1029	10k	10k	33k
R1030	33k	33k	27k
R1035	3k	3k	4.7k
R1038. R1039	82k	82k	150k
R1040	1k	1k	1.5k
R1041	1.5k	1.5k	1k

	XR-J22M. XR-J22. XR-J11/HEXJ. HBXJ. HEWZIXJ
R2559. R2560	2.4k
R4215. R4216	27k
R4305. R4306	33k
R4321. R4322	27k
C1002. C1003	ACH1250
C1018	3.3/50
C4205. C4206	470p
C4303. C4304	0.027

SCH−2

AF ASSY, SECONDARY ASSY

www.manualscenter.com

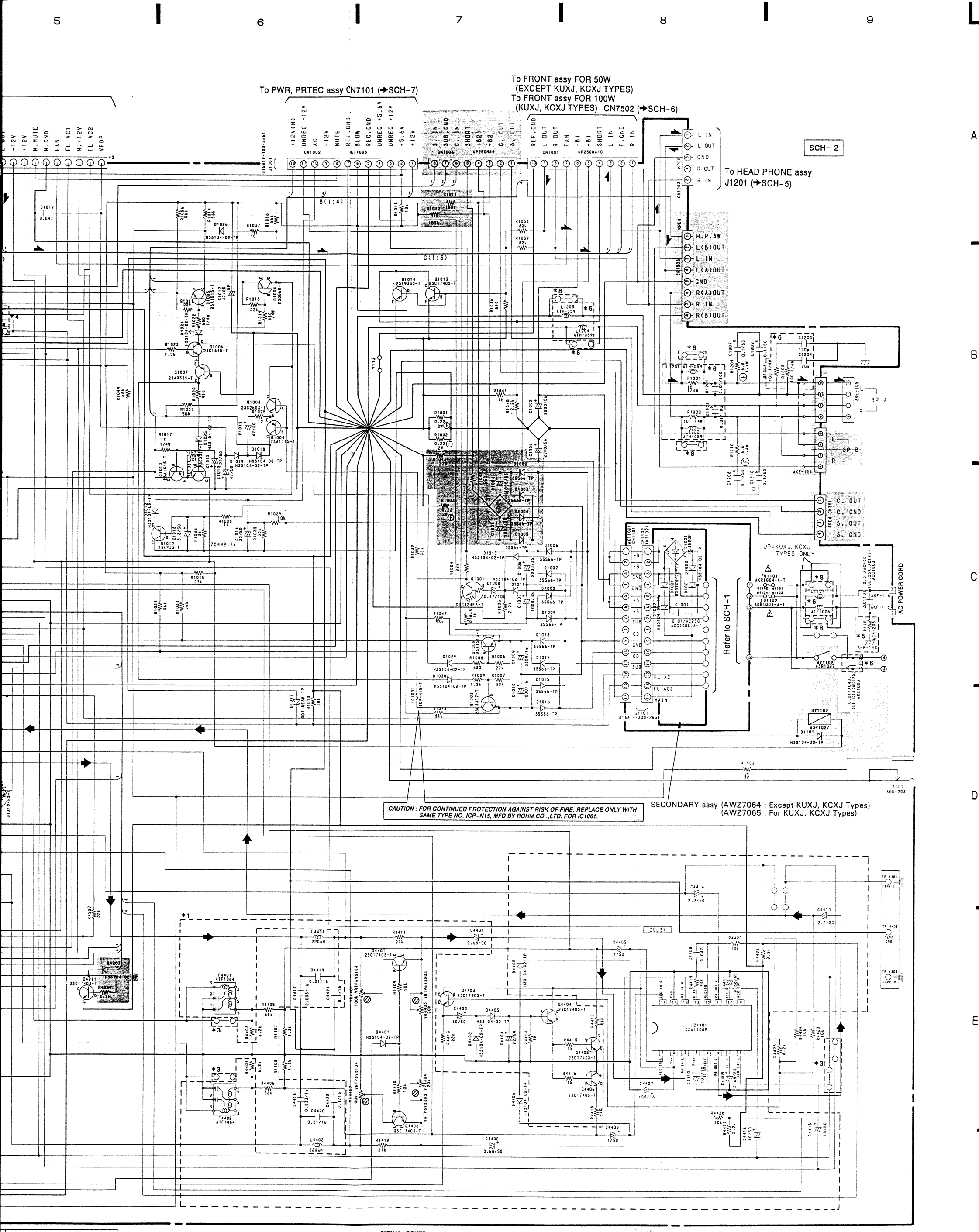

XR-J11M/SDXJ, YPWXJ XR-J11/SDXJ, YPWXJ	XR-J11M/ KUXJ, KCXJ
100	2.4k
15k	27k
15k	33k
56k	27k
ACH1250	ACH1249
3.3/50	2.2/50
820p	470p
3300p	0.027

*1 : EXCEPT XR-J11M/SDXJ, YPWXJ, XR-J11/SDXJ, YPWXJ
*2 : XR-J22M, XR-J22 ONLY
*3 : XR-J11M/SDXJ, YPWXJ, XR-J11/SDXJ, YPWXJ ONLY
*4 : XR-J11M, XR-J11 ONLY
*5 : KUXJ, KCXJ TYPES ONLY
*6 : HEWZIXJ TYPE ONLY
*7 : SDXJ TYPE ONLY
*8 : EXCEPT HEWZIXJ

SIGNAL ROUTE
➜ : TAPE 1 Lch SIGNAL ROUTE
⇨ : CD Lch SIGNAL ROUTE
◣ : L ch SIGNAL ROUTE

NOTE : Sections marked with ▒ are not used for XR-J22M, XR-J22, XR-J11M and XR-J11.

www.manualscenter.com

AF ASSY, SECONDARY ASSY

SCH-2

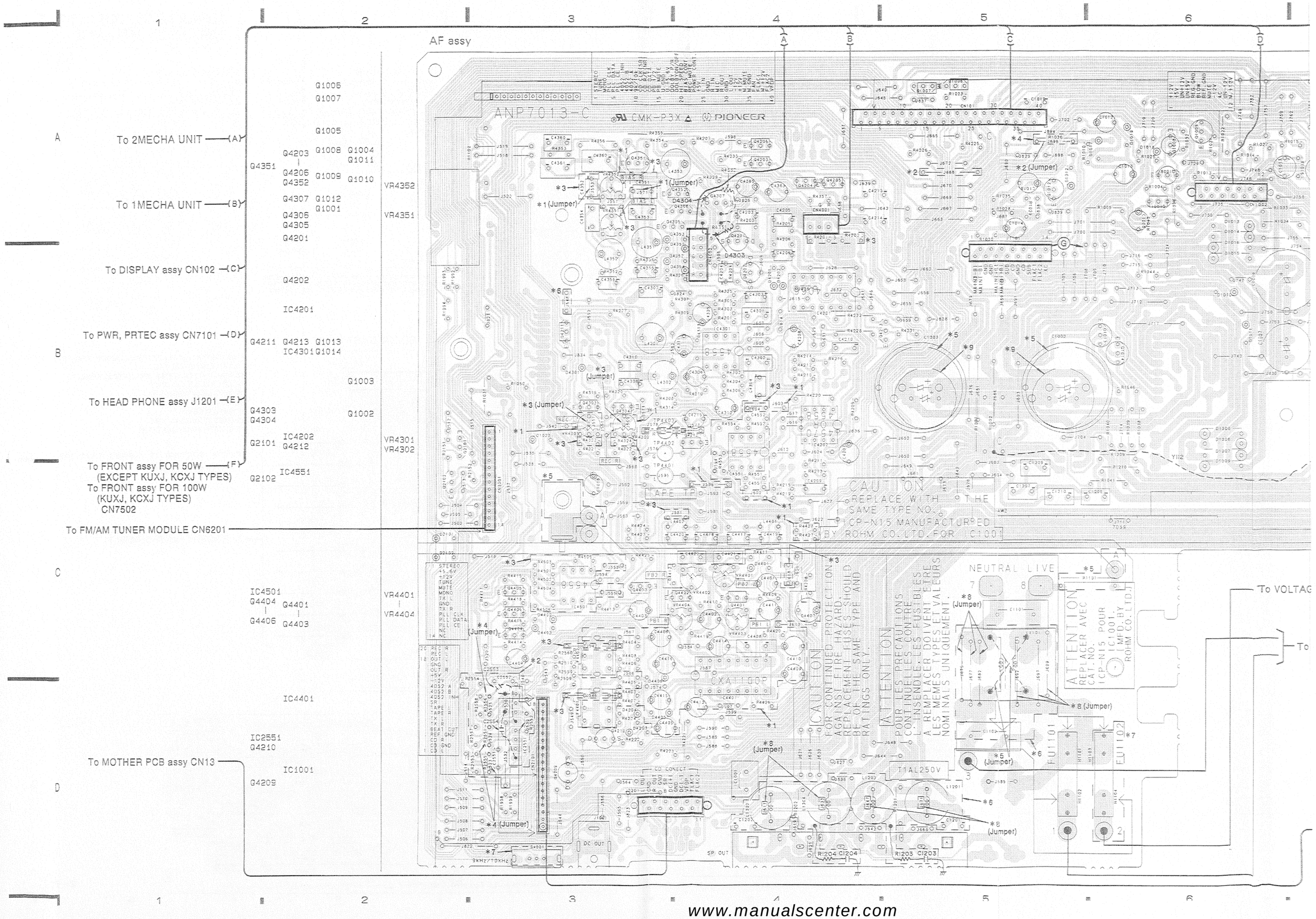

www.manualscenter.com

XR-J22M, XR-J11M
XR-J22, XR-J11

PCB – 1

NOTE FOR PCB DIAGRAMS:

1. Part numbers in PCB diagrams match those in the schematic diagrams.
2. A comparison between the main parts of PCB and schematic diagrams is shown below.

Symbol in PCB Diagrams	Symbol in Schematic Diagrams	Part Name
Q504 (E B C)	Q504	Transistor
D203	D203	Diode
C513	C513	Capacitor (Polarized)

3. The transistor terminal marked with E or ⊏ shows the emitter.
4. The diode terminal marked with ◎ or ⊏ shows cathode side.
5. The capacitor terminal marked with ◎ or ⊏ shows negative terminal.

NOTE FOR PCB DIAGRAMS:

1. Part numbers in PCB diagrams match those in the schematic diagrams.
2. A comparison between the main parts of PCB and schematic diagrams is shown below.

Symbol in PCB Diagrams	Symbol in Schematic Diagrams	Part Name
B C E	B C E B C E	Transistor
B C E	B C E B C E	Transistor with resistor
D G S	D G S D G S	Field effect transistor
		Resistor array
	IN OUT	3- terminal regulator

A

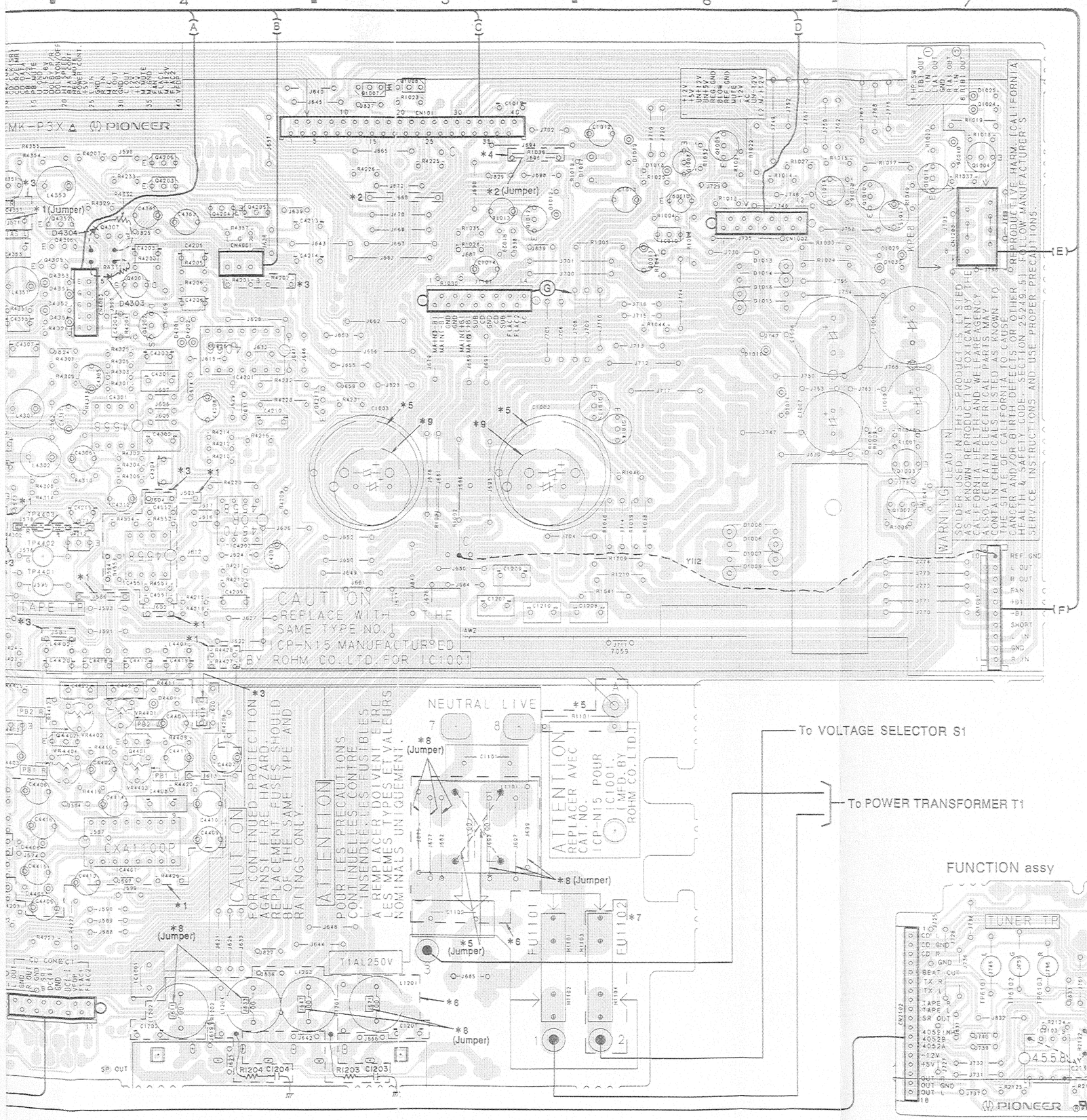

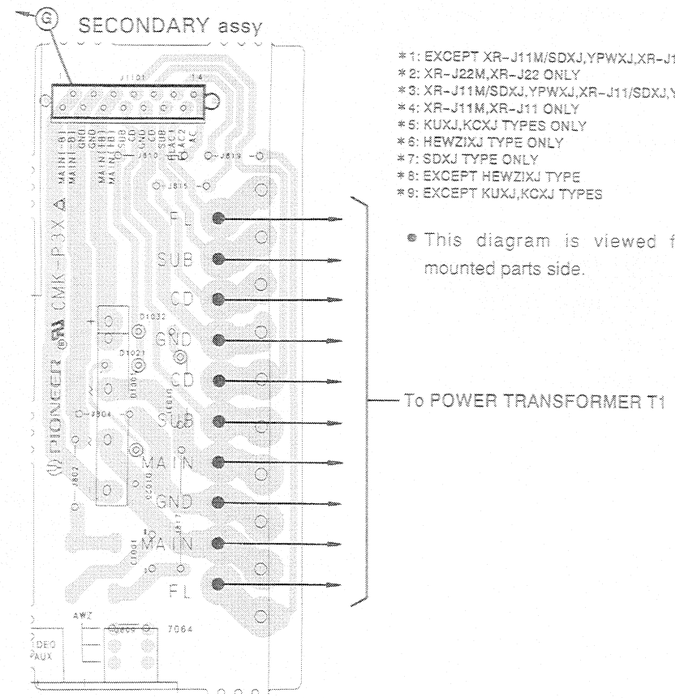

B

*1: EXCEPT XR-J11M/SDXJ,YPWXJ,XR-J11/SDXJ,YPWXJ
*2: XR-J22M,XR-J22 ONLY
*3: XR-J11M/SDXJ,YPWXJ,XR-J11/SDXJ,YPWXJ
*4: XR-J11M,XR-J11 ONLY
*5: KUXJ,KCXJ TYPES ONLY
*6: HEWZIXJ TYPE ONLY
*7: SDXJ TYPE ONLY
*8: EXCEPT HEWZIXJ TYPE
*9: EXCEPT KUXJ,KCXJ TYPES

● This diagram is viewed from the mounted parts side.

C

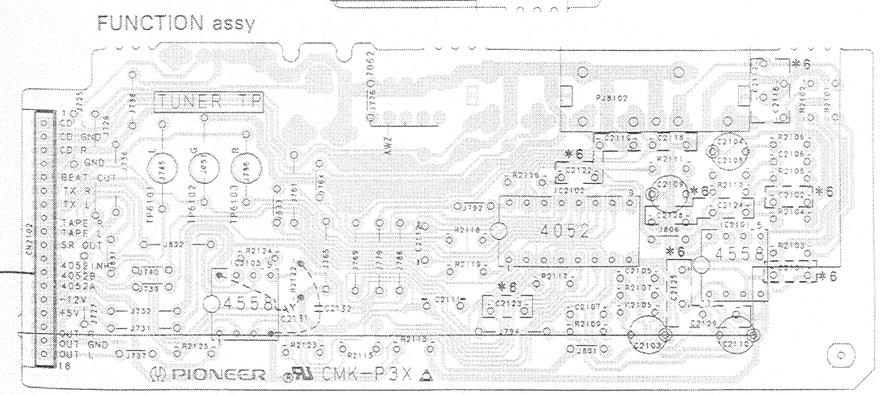

D

www.manualscenter.com

2.2 FUNCTION ASSY

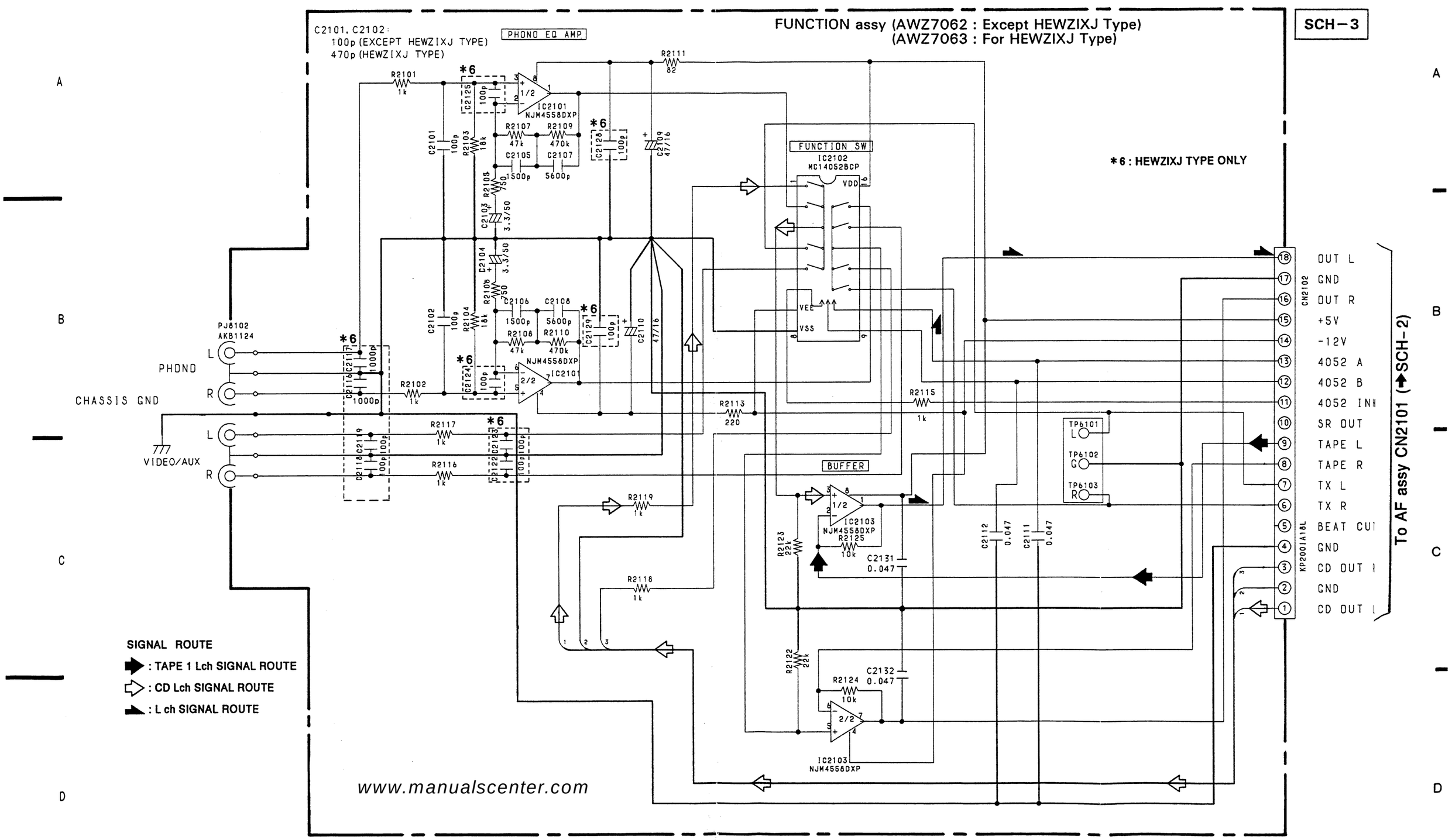

www.manualscenter.com

3. DISPLAY ASSY, VOLUME ASSY, MIC ASSY, HEAD PHONE ASSY AND TAPE IND. ASSY

3.1 DISPLAY ASSY (1/2)

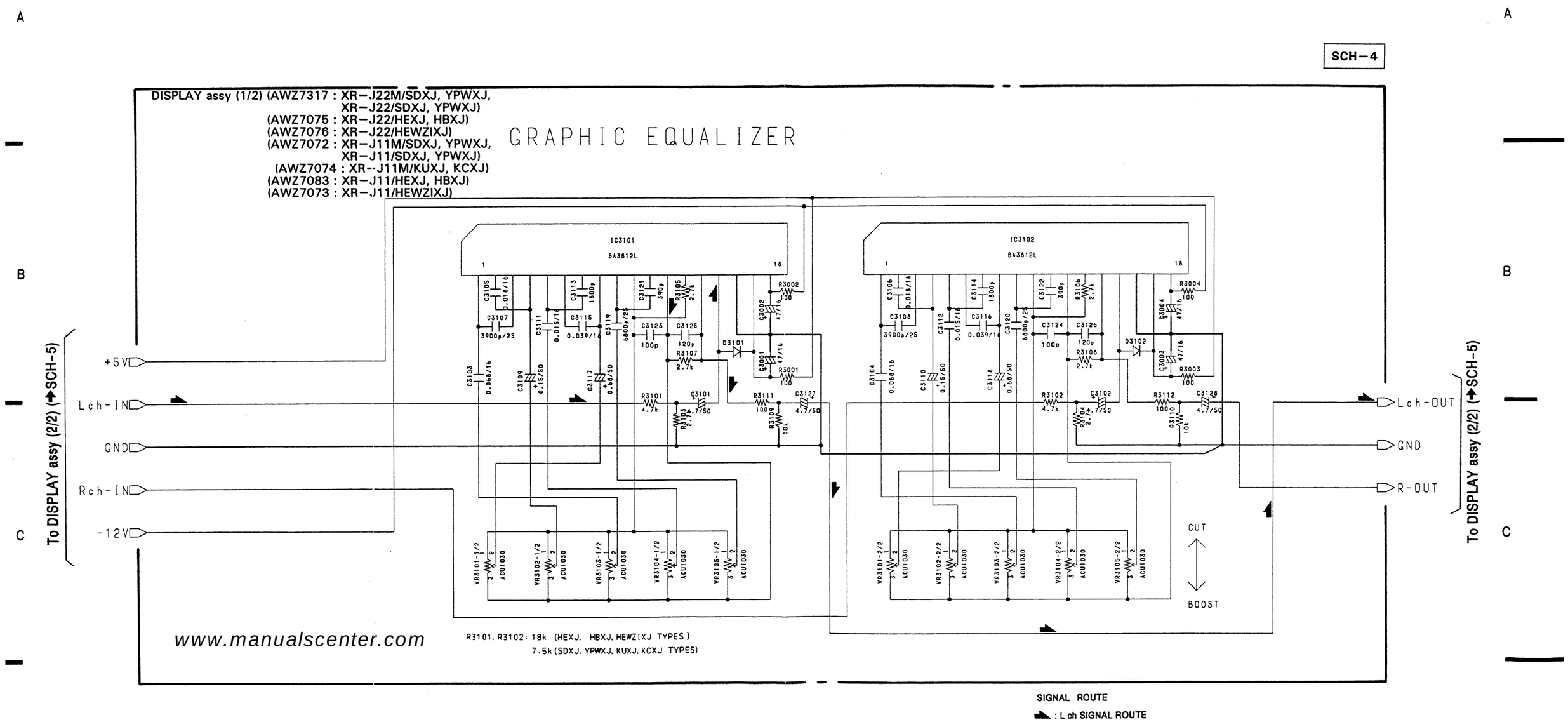

www.manualscenter.com

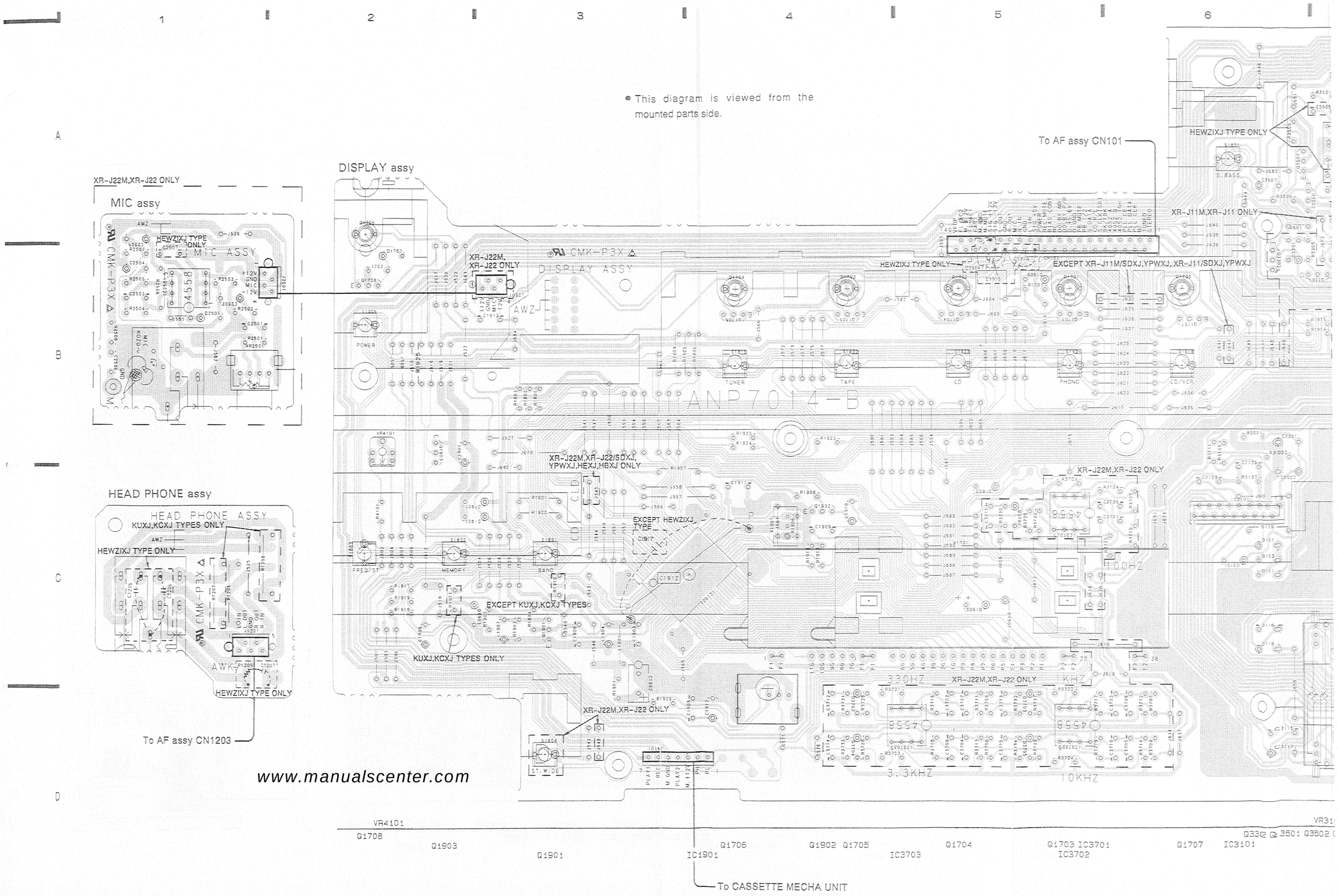

www.manualscenter.com

PCB－2

- This diagram is viewed from the mounted parts side.

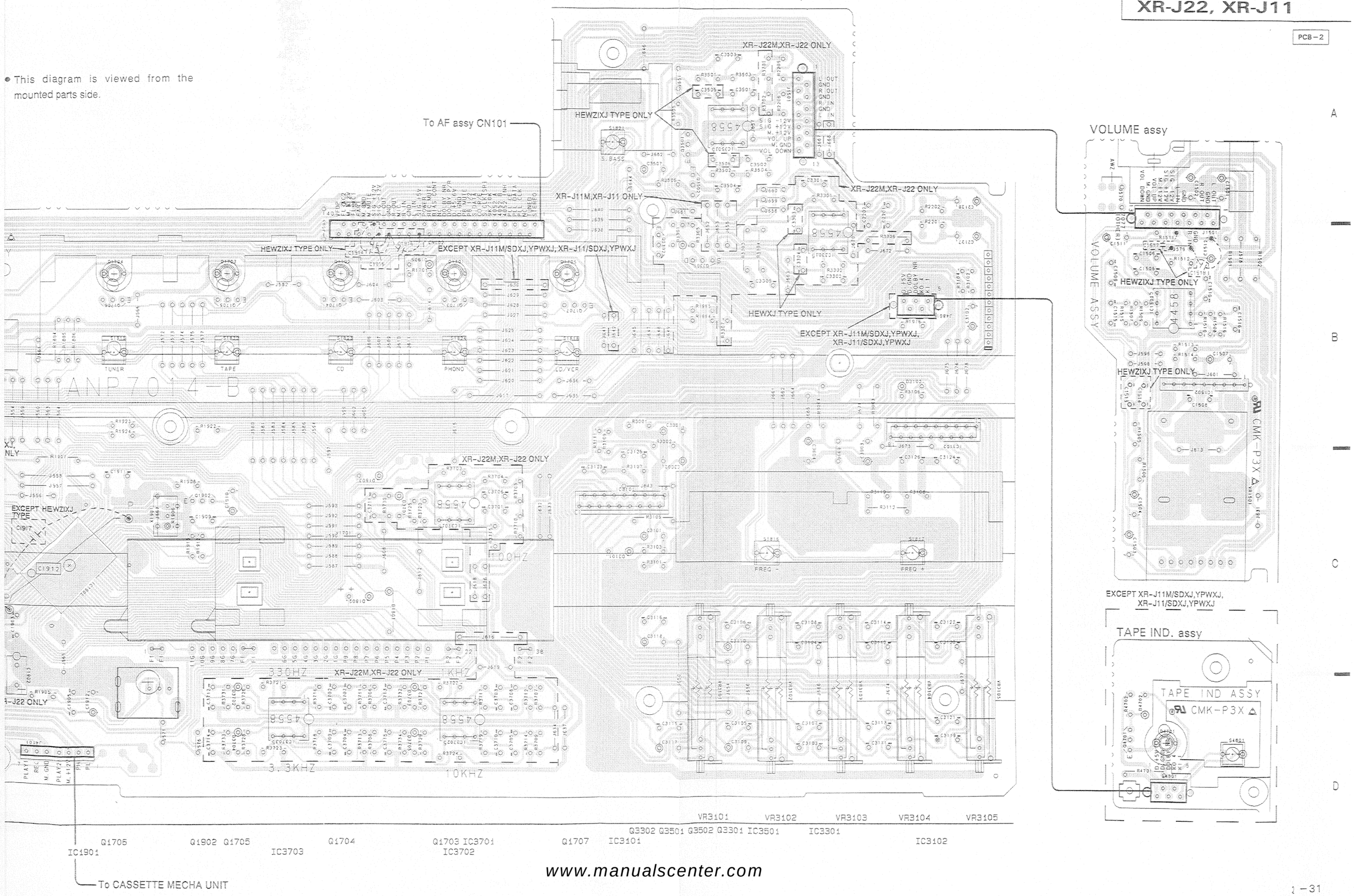

www.manualscenter.com

3.2 DISPLAY ASSY (2/2), VOLUME ASSY, MIC ASSY, HEAD PHONE ASSY and TAPE IND. ASSY

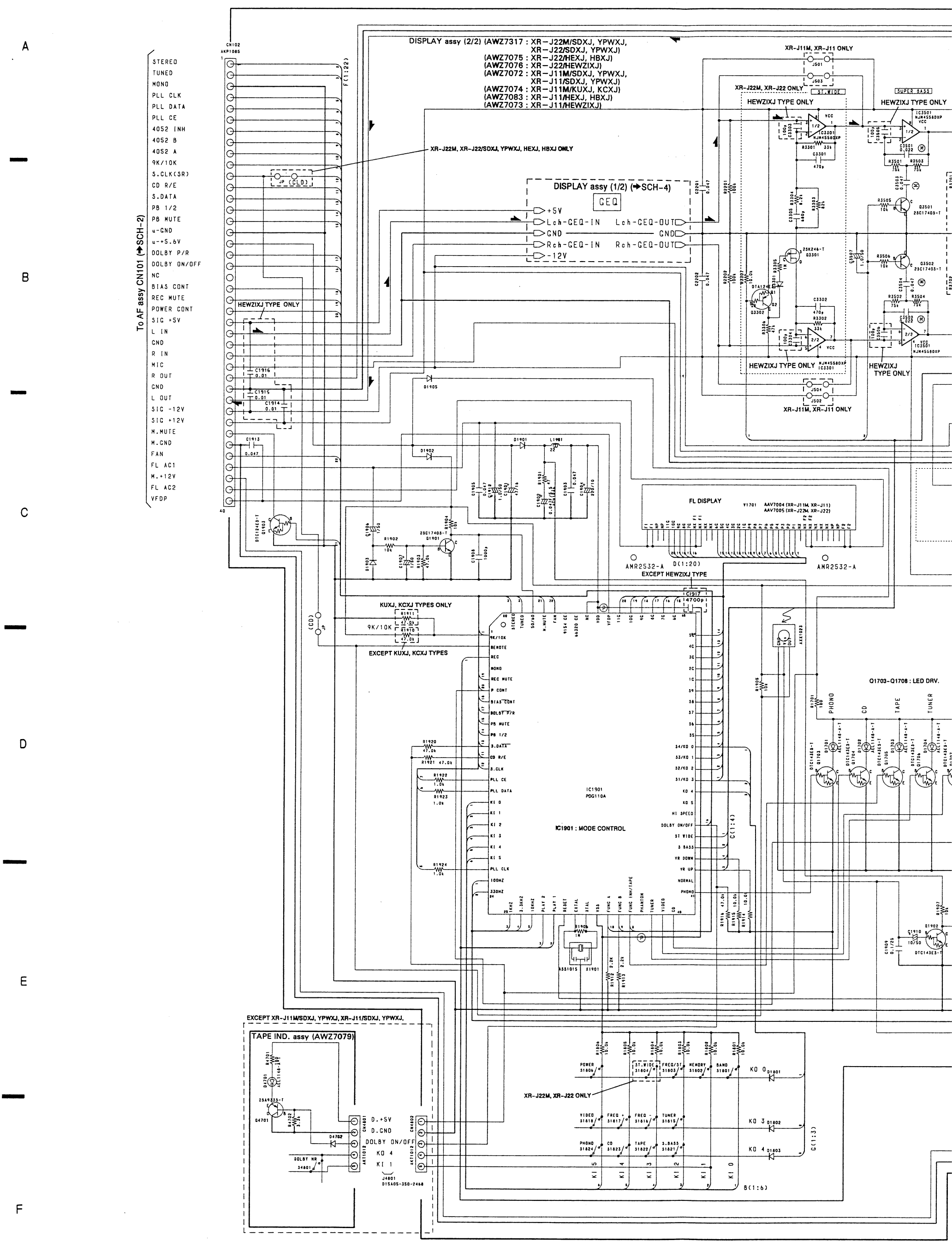

www.manualscenter.com

SCH-5 DISPLAY ASSY (2/2), VOLUME ASSY, MIC ASSY, HEAD PHONE ASSY, TAPE IND. ASSY

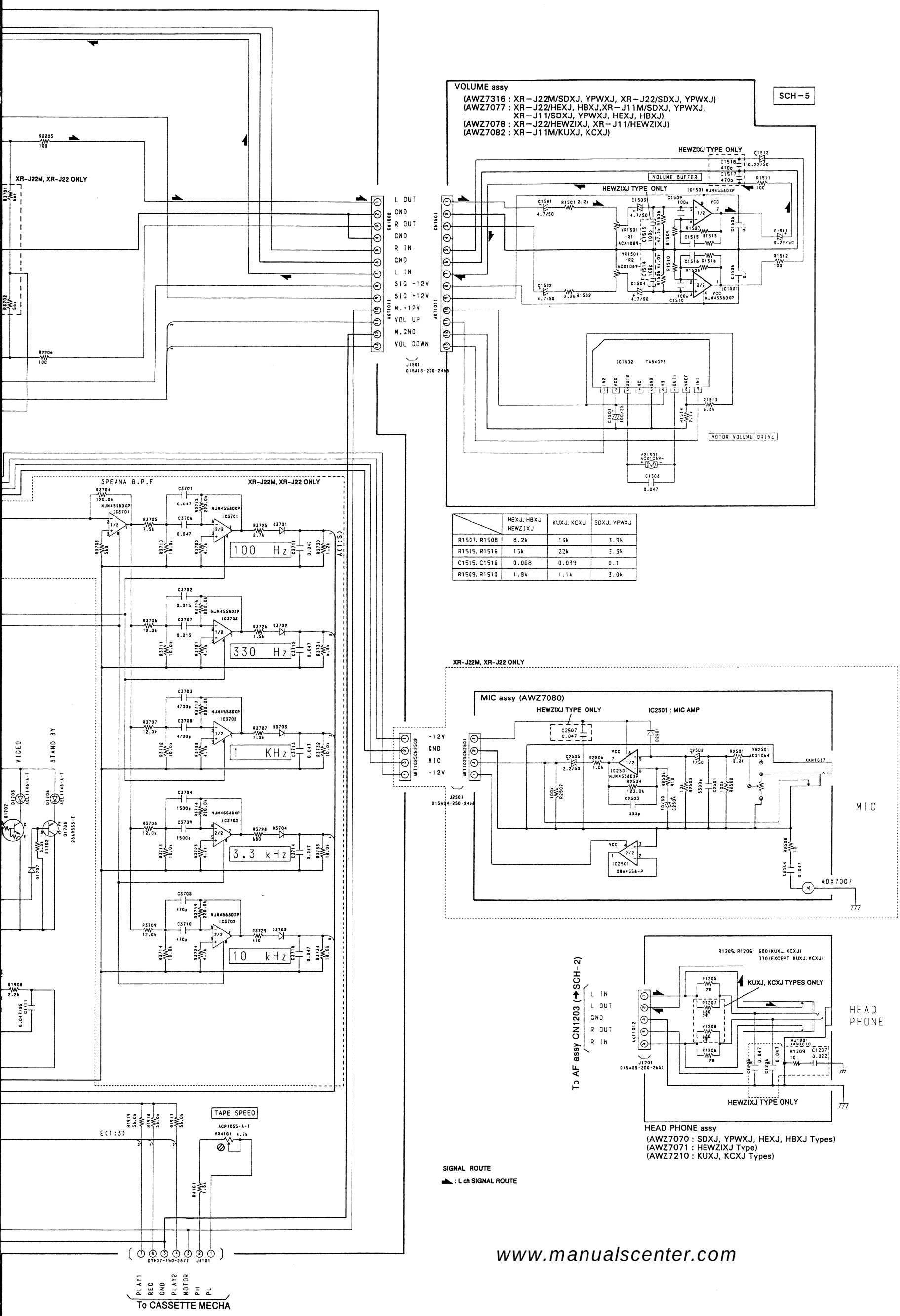

	HEXJ, HBXJ HEWZIXJ	KUXJ, KCXJ	SDXJ, YPWXJ
R1507, R1508	8.2k	13k	3.9k
R1515, R1516	15k	22k	3.3k
C1515, C1516	0.068	0.039	0.1
R1509, R1510	1.8k	1.1k	3.0k

www.manualscenter.com

DISPLAY ASSY (2/2), VOLUME ASSY,
MIC ASSY, HEAD PHONE ASSY,
TAPE IND. ASSY

SCH-5

4. POWER MODULE

4.1 FRONT ASSY FOR 50W (Except KUXJ, KCXJ types) and FRONT ASSY FOR 100W (KUXJ, KCXJ types)

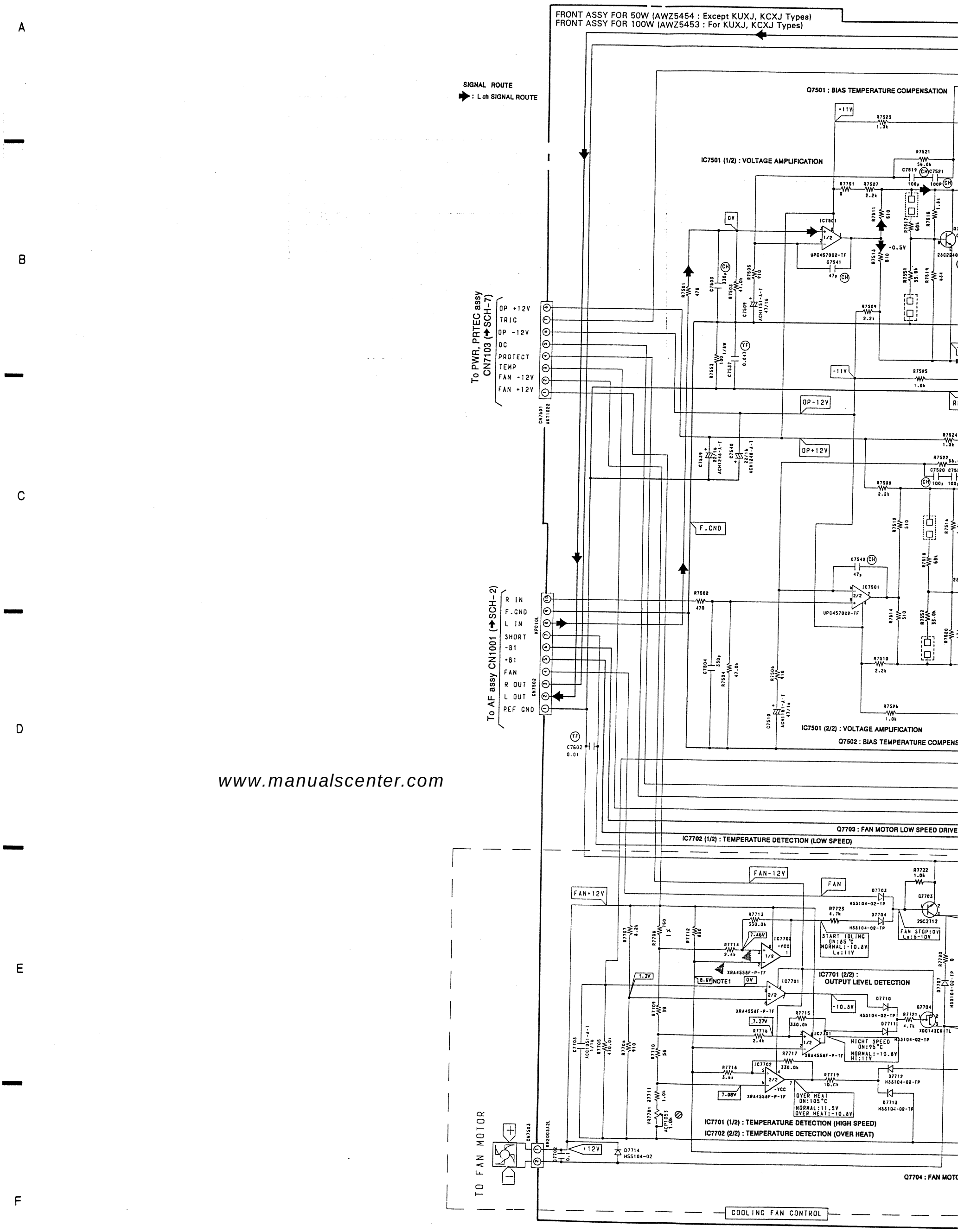

www.manualscenter.com

SCH-6 FRONT ASSY FOR 50W
FRONT ASSY FOR 100W

SCH-6

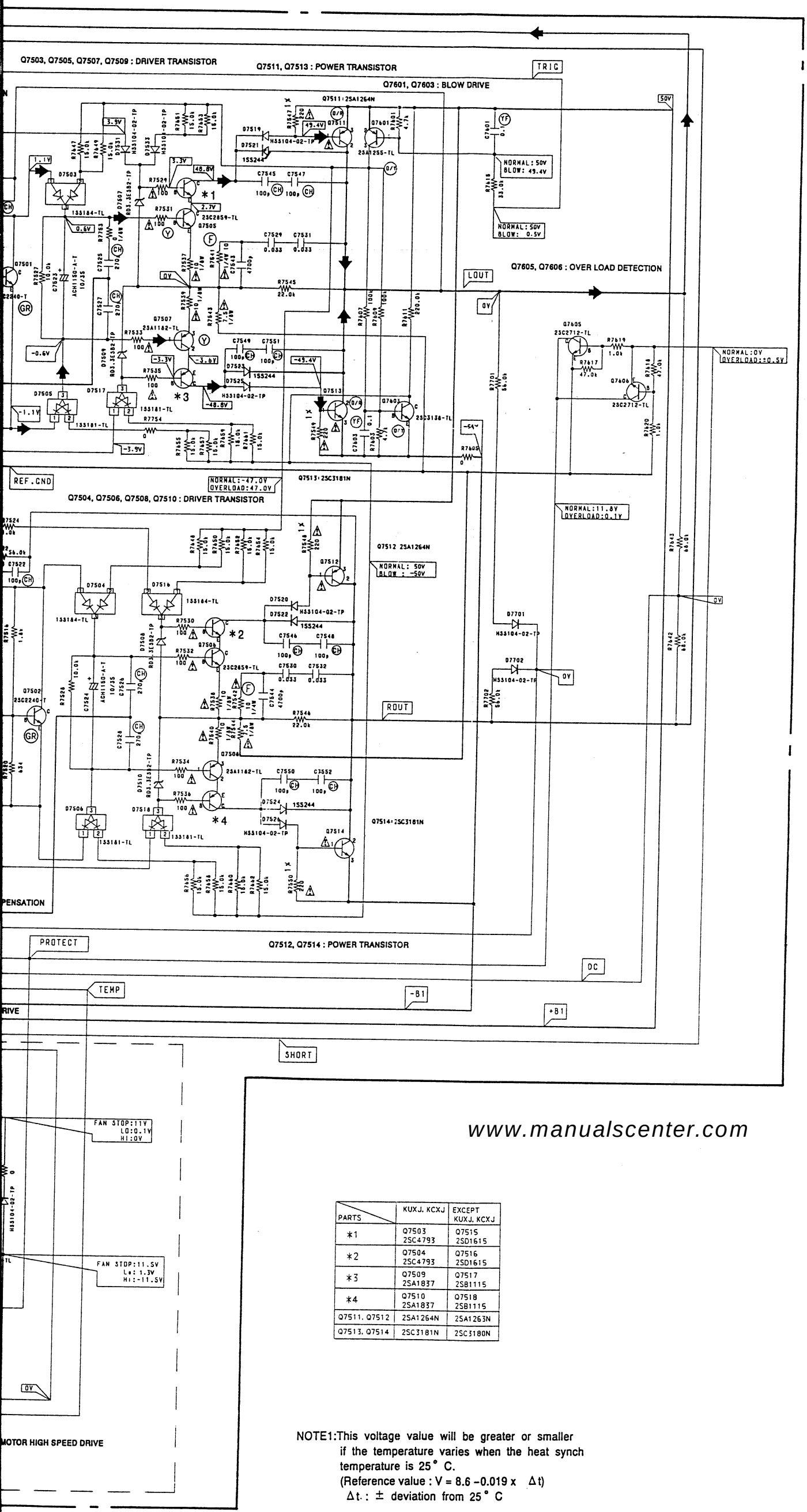

www.manualscenter.com

PARTS	KUXJ. KCXJ	EXCEPT KUXJ. KCXJ
*1	Q7503 2SC4793	Q7515 2SD1615
*2	Q7504 2SC4793	Q7516 2SD1615
*3	Q7509 2SA1837	Q7517 2SB1115
*4	Q7510 2SA1837	Q7518 2SB1115
Q7511. Q7512	2SA1264N	2SA1263N
Q7513. Q7514	2SC3181N	2SC3180N

NOTE1:This voltage value will be greater or smaller if the temperature varies when the heat synch temperature is 25° C.
(Reference value : V = 8.6 -0.019 x Δt)
Δt : ± deviation from 25° C

FRONT ASSY FOR 50W
FRONT ASSY FOR 100W

SCH-6

PCB-3

- This diagram is viewed from the mounted parts side.

FRONT ASSY FOR 50W (Except KUXJ, KCXJ Type)
FRONT ASSY FOR 100W (For KUXJ, KCXJ Types)

Q7507 Q7508
Q7509 Q7510
Q7517 Q7518
IC7501
Q7501 Q7502
Q7513 Q7514
Q7505
Q7503 Q7504
Q7515 Q7516
Q7603
Q7506
Q7511 Q7512
Q7601 Q7606
Q7605
IC7702
Q7703 VR7701
IC7701
Q7704

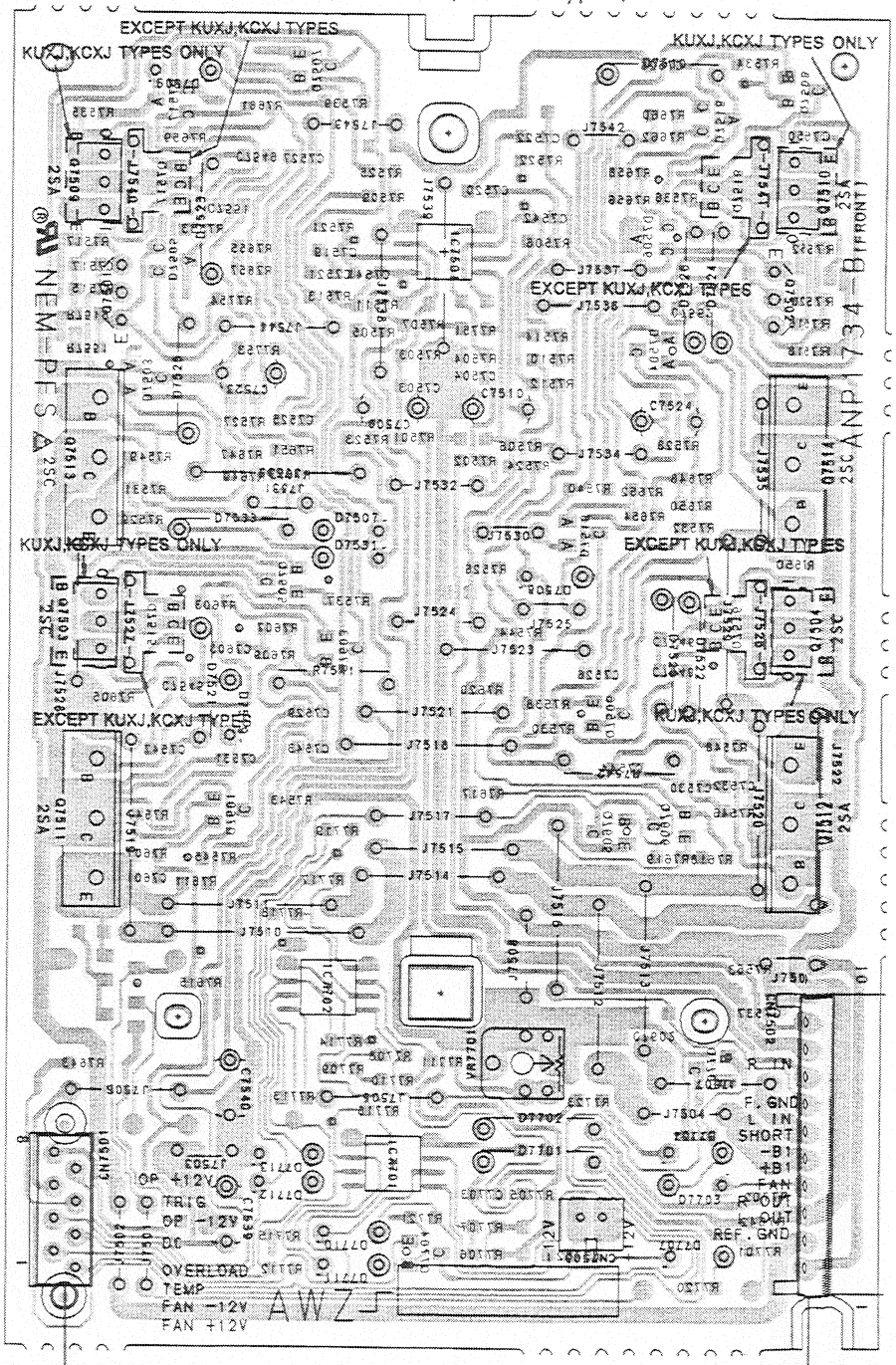

To PWR, PRTEC assy CN7103

To AF assy CN1001

www.manualscenter.com

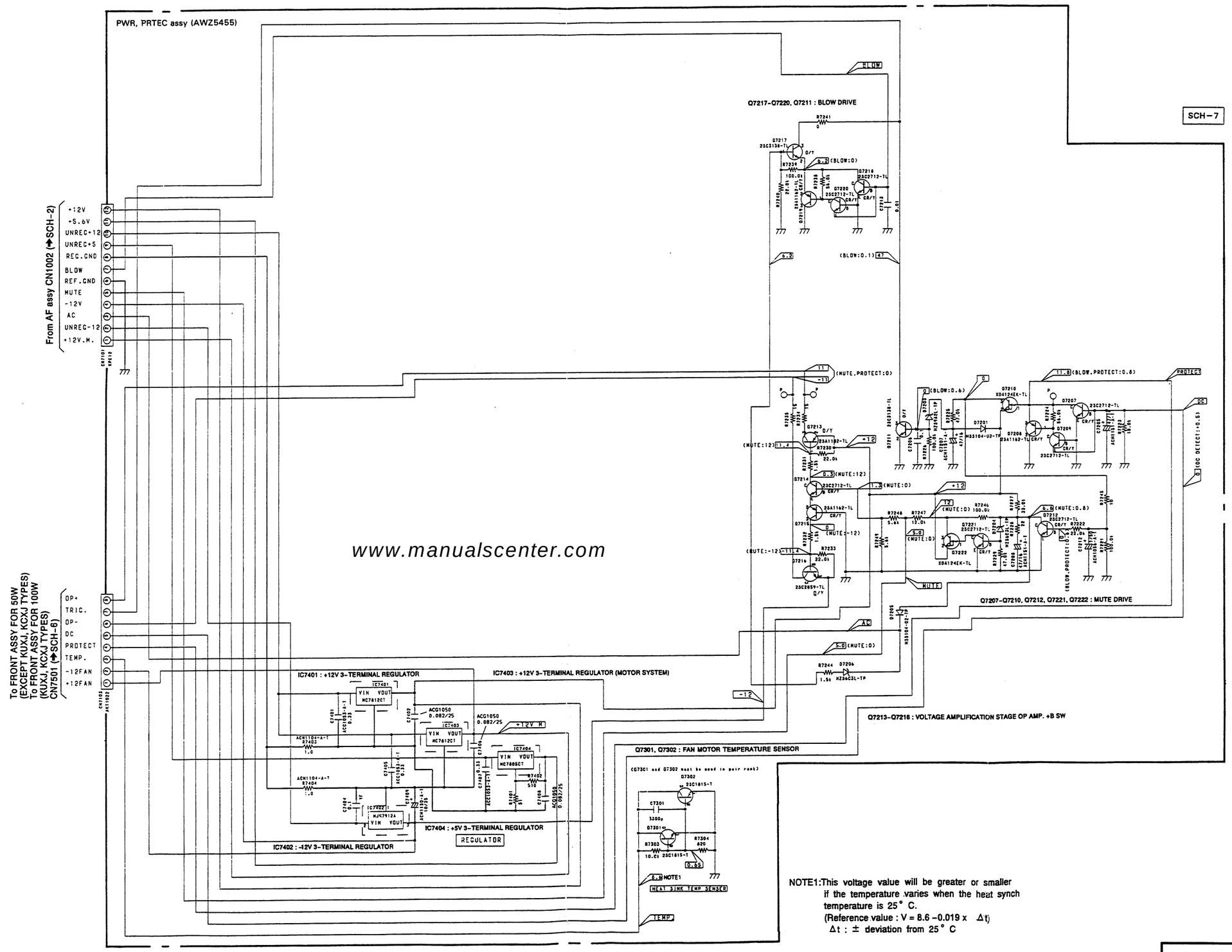

www.manualscenter.com

5. FM/AM TUNER MODULE

● Except HEWZIXJ Type

NOTE : VOLTAGE AND CURRENT

mV : Signal voltage at FM 1kHz, 100% MOD.

or ← V :
DC voltage (V) at no input signal unless otherwise noted.
Value in ( ) is DC voltage at rated power.

⇦ mA or ← mA :
DC current at no input signal unless otherwise noted.

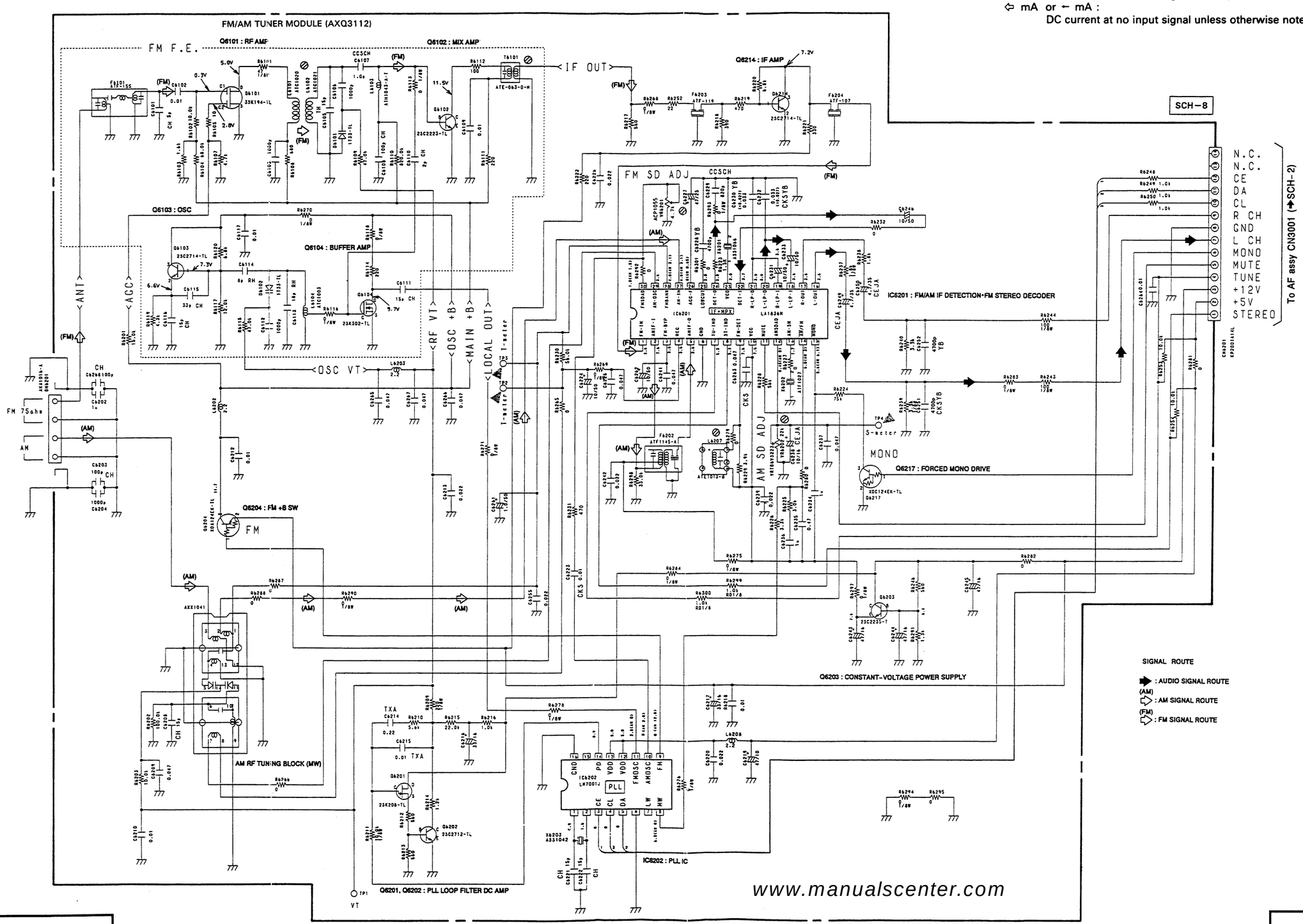

www.manualscenter.com

FM/AM TUNER MODULE

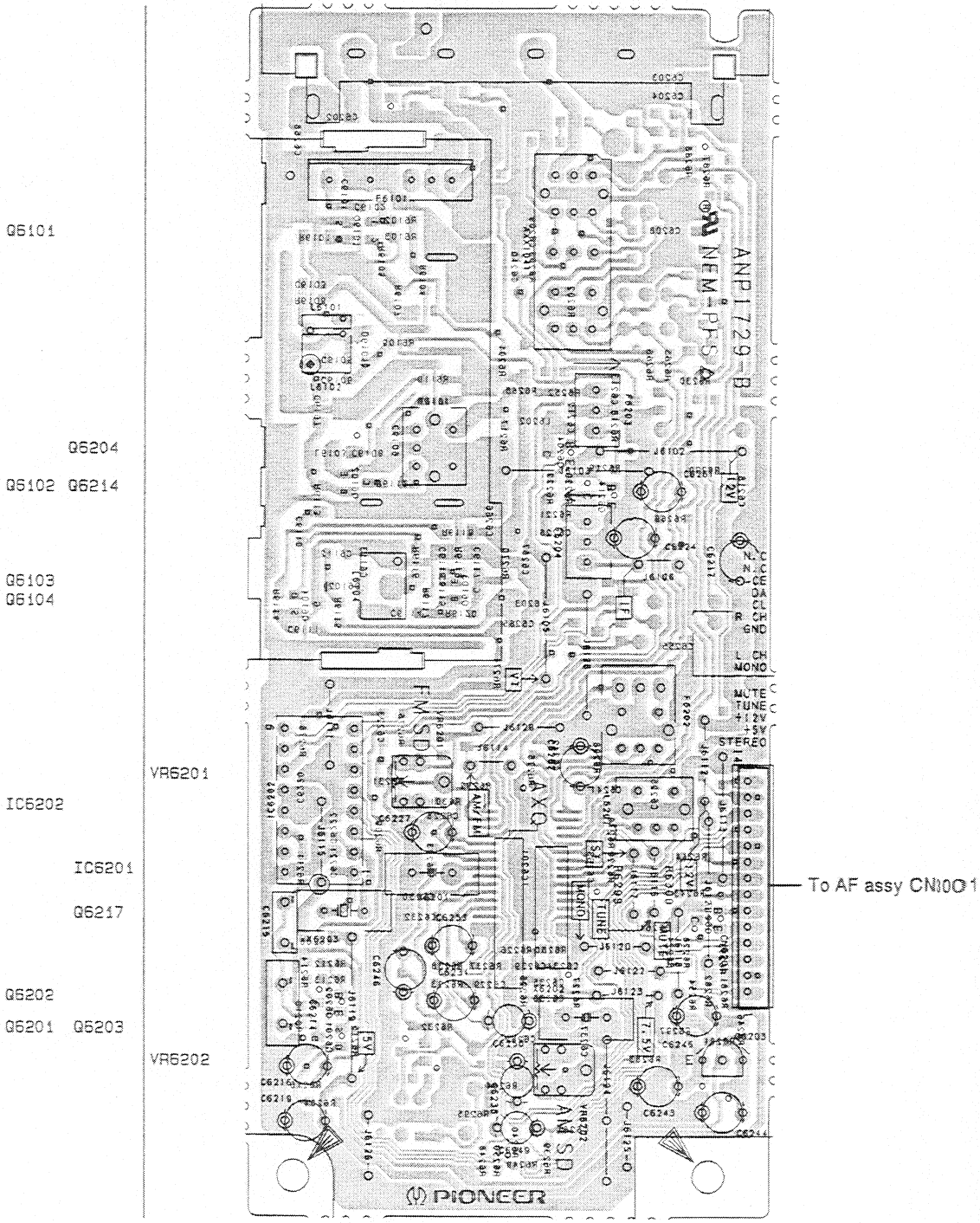

• This diagram is viewed from the mounted parts side.

PCB-6

● For HEWZIXJ Type

FM/AM TUNER MODULE

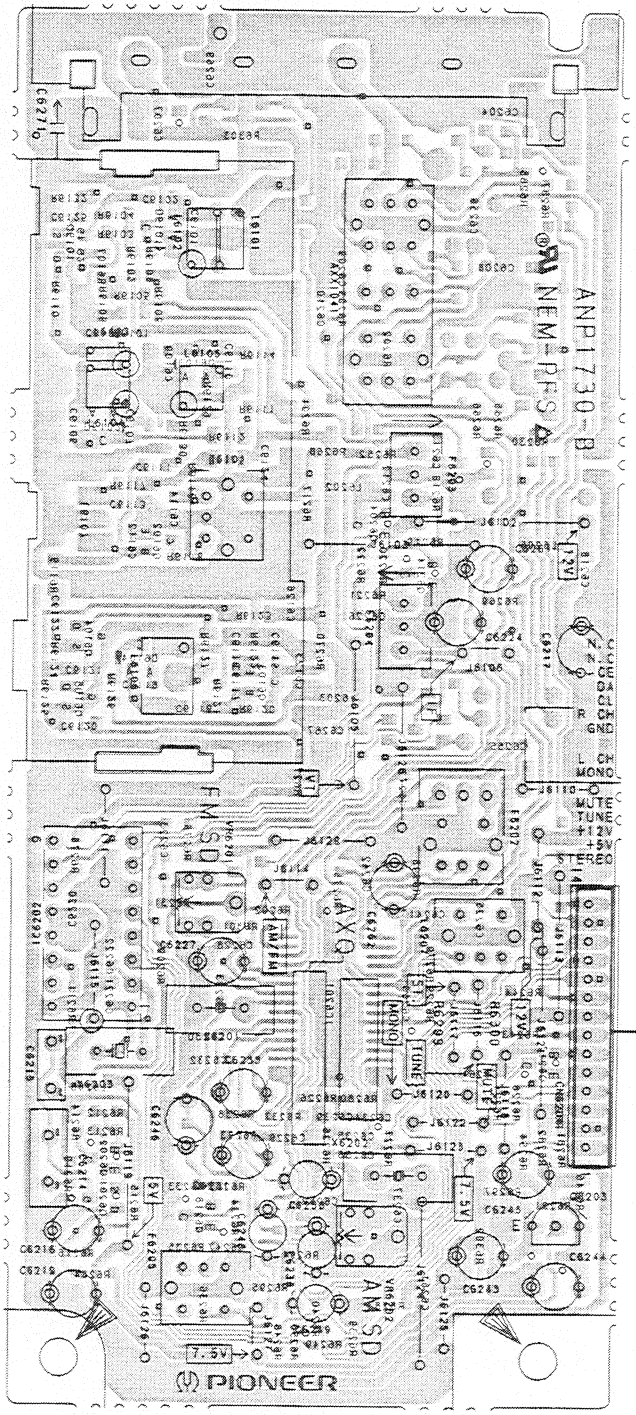

www.manualscenter.com

● This diagram is viewed from the mounted parts side.

NOTE: VOLTAGE AND CURRENT

mV : Signal voltage at FM 1kHz, 100% MOD.

or ← V :
DC voltage (V) at no input signal unless otherwise noted.
Value in ( ) is DC voltage at rated power.

⇦ mA or ← mA :
DC current at no input signal unless otherwise noted.

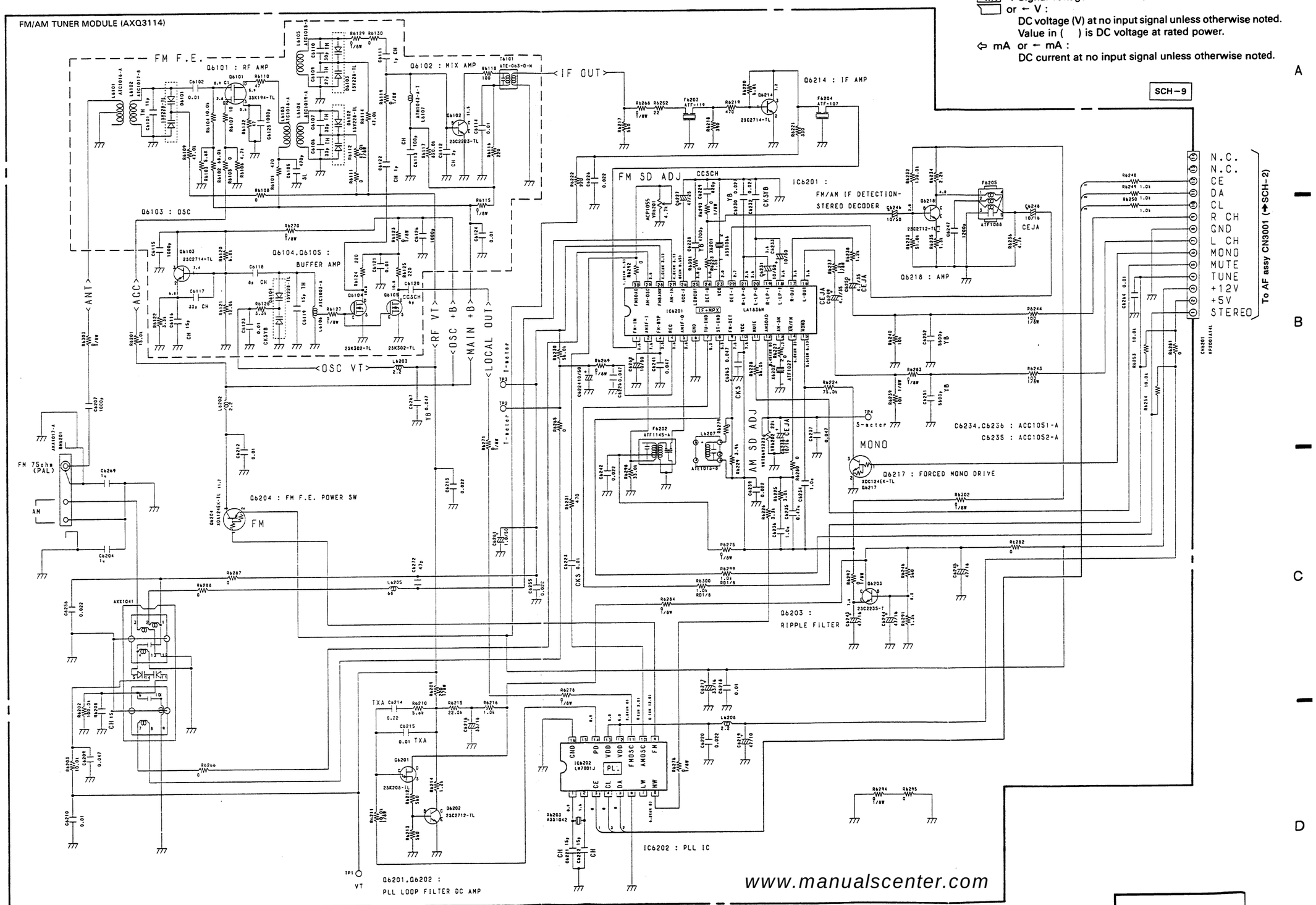

www.manualscenter.com

SCH-9 FM/AM TUNER MODULE (For HEWZIXJ Types)

FM/AM TUNER MODULE (For HEWZIXJ Types) **SCH-9**

6. MOTHER PCB ASSY, SUB PCB ASSY AND SINGLE MECHA ASSY (FOR XR−J22 AND XR−J11)

NOTE : VOLTAGE AND CURRENT
▭ or ← V :
DC voltage (V) in PLAY mode unless otherwise noted.
⇦ mA or ← mA :
DC current in PLAY mode unless otherwise noted.
Value in ( ) is DC current in STOP mode.

Note: Wave form (See P2-61, 2-62)

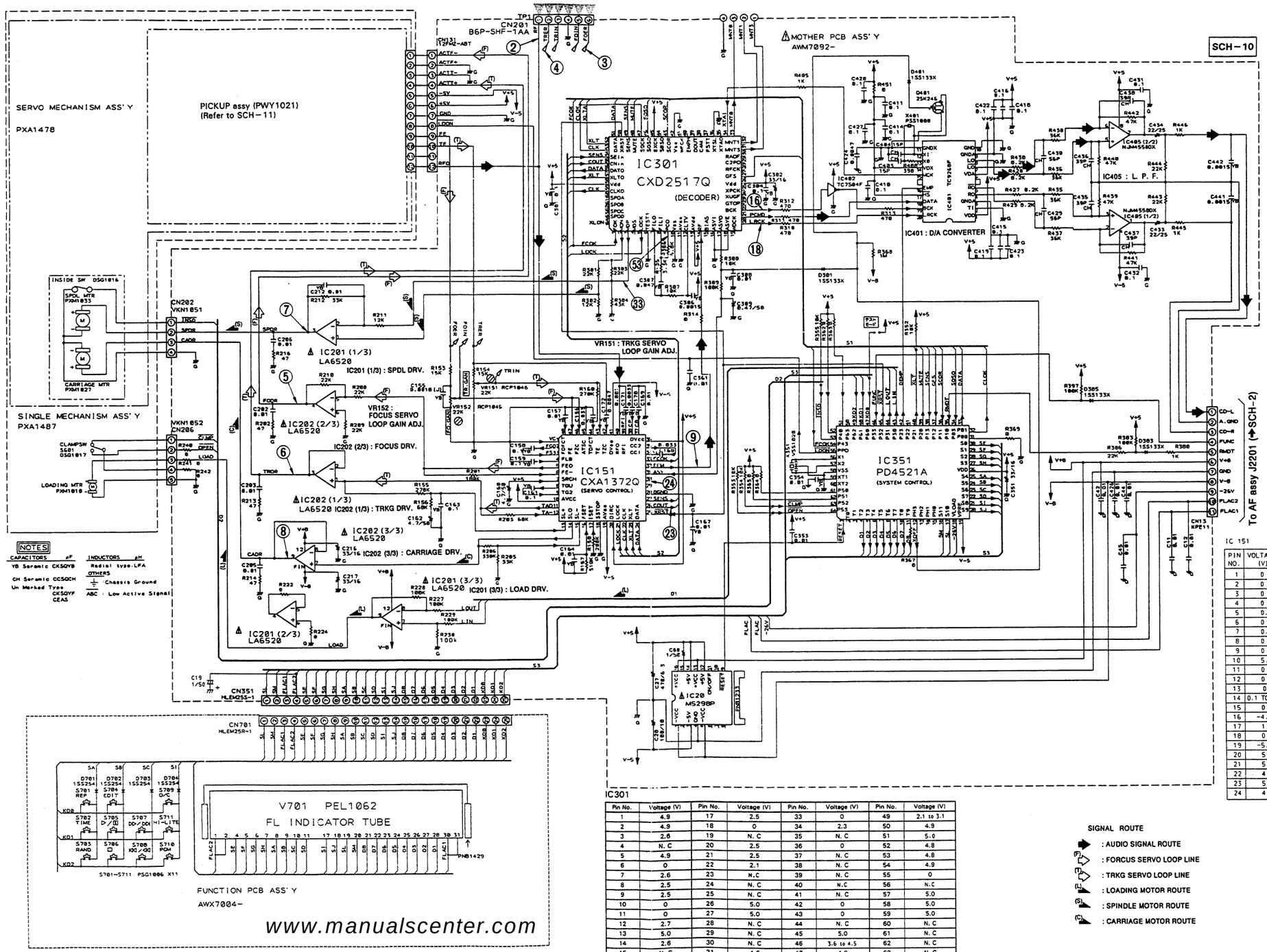

IC 151

PIN NO.	VOLTAGE (V)	PIN NO.	VOLTAGE (V)
1	0	25	5.0
2	0	26	0
3	0	27	4.9
4	0	28	0
5	0.4	29	N.C
6	0	30	N.C
7	0.3	31	2.5
8	0	32	2.6
9	0	33	4.9
10	5.0	34	−1.7
11	0	35	−1.9
12	0	36	5.0
13	0	37	−0.9
14	0.1 TO 0.7	38	−2.1
15	0	39	0
16	−4.0	40	0.9
17	1.2	41	−5.0
18	0	42	0
19	−5.0	43	0
20	5.0	44	0
21	5.0	45	0
22	4.9	46	0
23	5.0	47	0
24	4.9	48	0

IC301

Pin No.	Voltage (V)	Pin No.	Voltage (V)	Pin No.	Voltage (V)	Pin No.	Voltage (V)
1	4.9	17	2.5	33	0	49	2.1 to 3.1
2	4.9	18	0	34	2.3	50	4.9
3	2.6	19	N. C	35	N. C	51	5.0
4	N. C	20	2.5	36	0	52	4.8
5	4.9	21	2.5	37	N. C	53	4.8
6	0	22	2.1	38	N. C	54	4.9
7	2.6	23	N.C	39	N. C	55	0
8	2.5	24	N. C	40	N.C	56	N.C
9	2.5	25	N. C	41	N. C	57	5.0
10	0	26	5.0	42	0	58	5.0
11	0	27	5.0	43	0	59	5.0
12	2.7	28	N. C	44	N. C	60	N. C
13	5.0	29	N. C	45	5.0	61	N. C
14	2.6	30	N. C	46	3.6 to 4.5	62	N. C
15	N. C	31	4.5	47	4.8	63	N. C
16	0	32	0	48	0	64	N. C

www.manualscenter.com

To MECHANISM BOARD assy

To PICK UP assy

MOTHER PCB assy

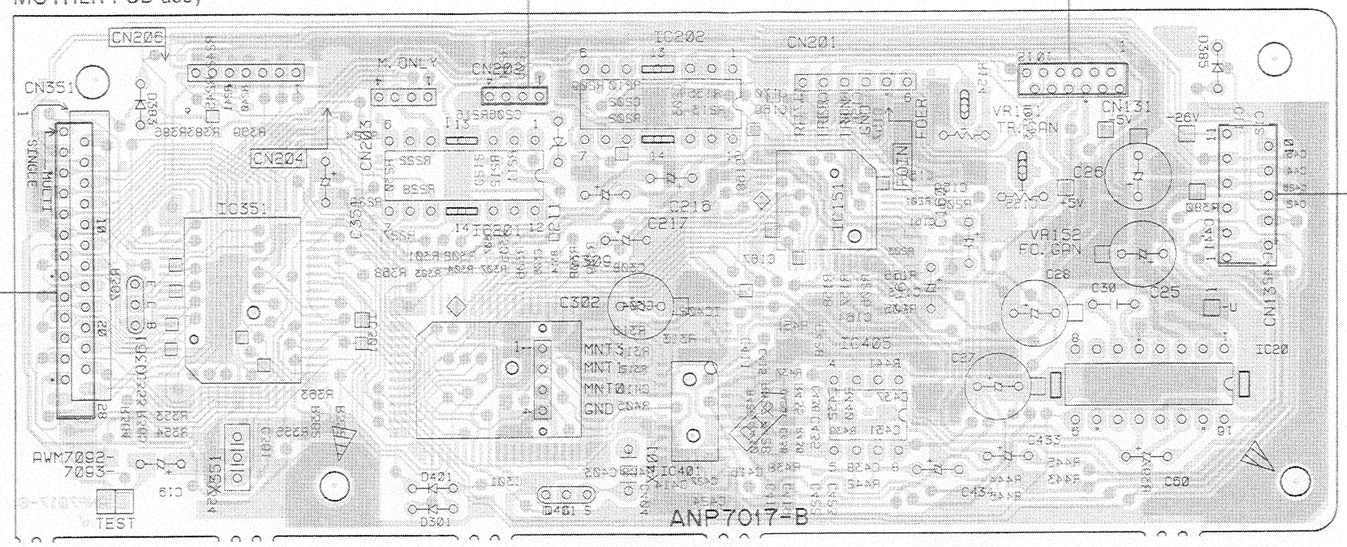

To AF assy J2201

- This diagram is viewed from the pink colored foil side.
- This PCB is double sided.

www.manualscenter.com

- This diagram is viewed from the mounted parts side.

SUB PCB assy

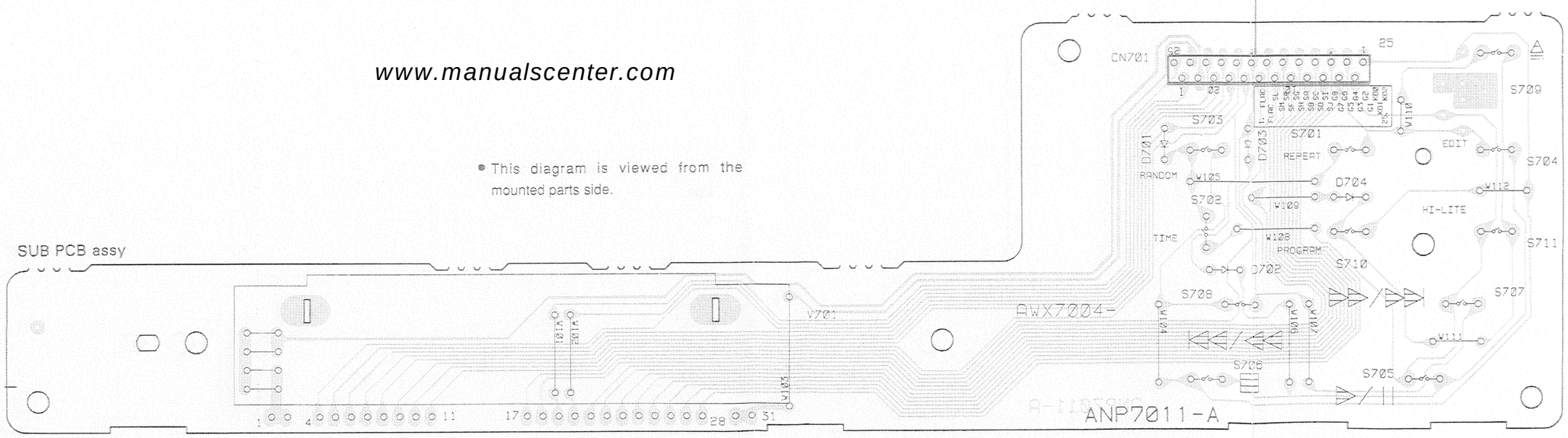

7. PICKUP ASSY

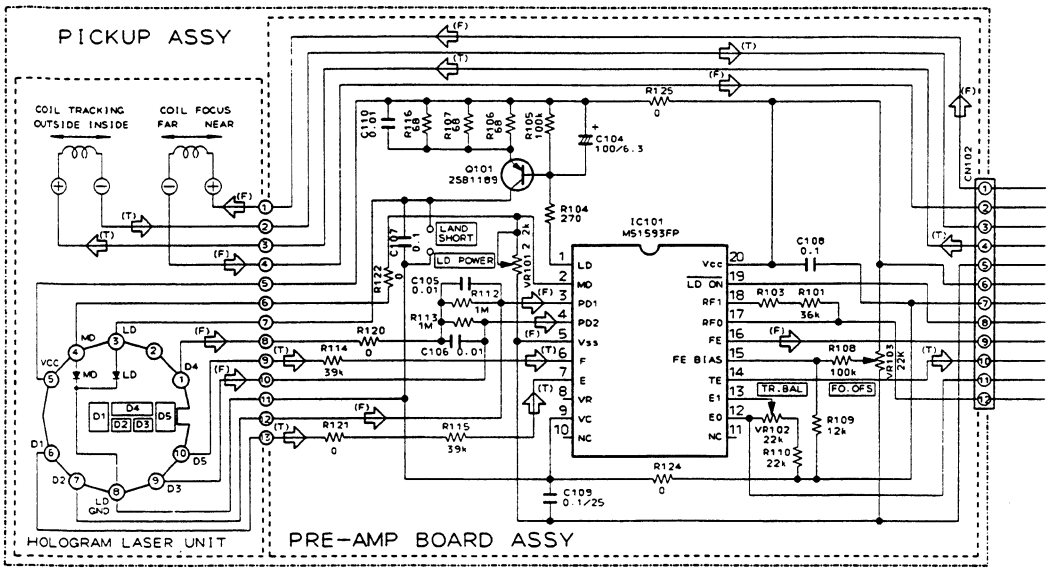

PICKUP ASSY

SCH-11

Waveforms

Note: The encircled numbers denote measuring point in the schematic disgram.

*1 50T-JUMP: After switching to the pause mode, press the manual search key.
*2 FOCUS-IN: Press the key without loading a disc.

(2) TP1-Pin1: PLAY MODE (RF)
500mV/div 500nsec/div

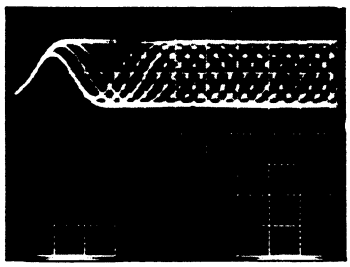

– GND

(4) TP1-Pin2: 50T-JUMP (*1) MODE (TRER)
1V/div 1msec/div

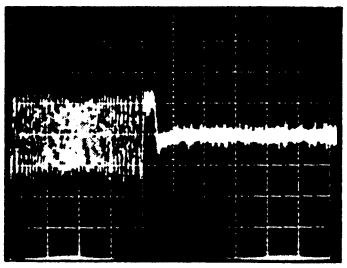

– GND

(5) IC202-Pin3: PLAY MODE (FODR)
1V/div 1msec/div

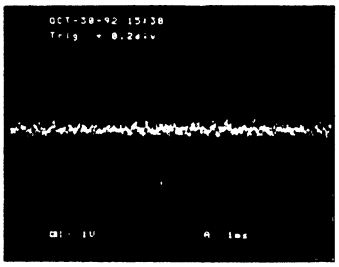

– GND

(2) TP1-Pin1: TRACK SEARCH MODE (RF)
500mV/div 200μsec/div

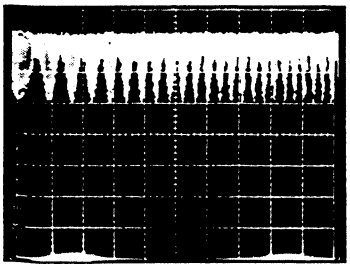

– GND

(4) TP1-Pin2: PLAY MODE (TRER)
1V/div 1msec/div

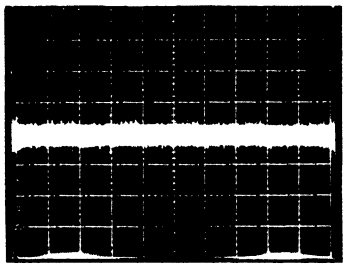

– GND

(6) IC202-Pin4: 50T-JUMP (*1) MODE (TRDR)
500mV/div 1msec/div

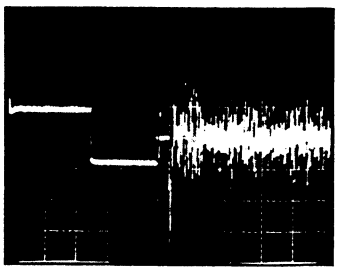

– GND

(3) TP1-Pin6: PLAY MODE (FOER)
100mV/div 10msec/div

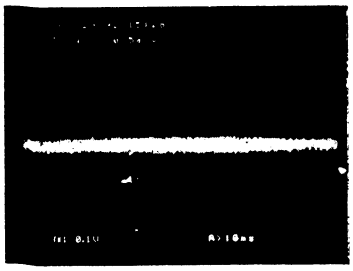

– GND

(5) IC202-Pin3: FOCUS-IN (*2) MODE (FODR)
1V/div 200msec/div

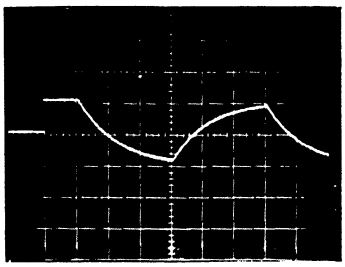

– GND

(6) IC202-Pin4: PLAY MODE (TRDR)
500mV/div 1msec/div

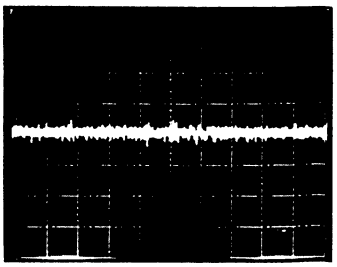

– GND

www.manualscenter.com

(7) IC201-Pin3: PLAY MODE (SPDR)
1V/div 50msec/div

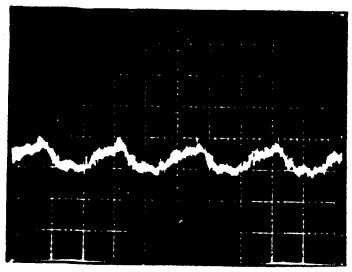

– GND

(9) IC151-Pin32: PLAY MODE (EFM)
2V/div 500nsec/div

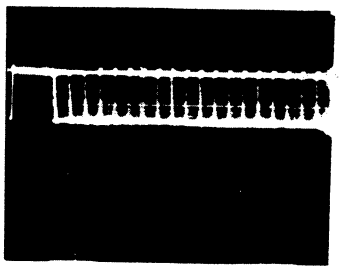

– GND

(23) : TRACK SEARCH MODE
Upper: TP1-Pin1 (RF) 1V/div
Lower: IC151-Pin26 (C. OUT)
2V/div 50μsec/div

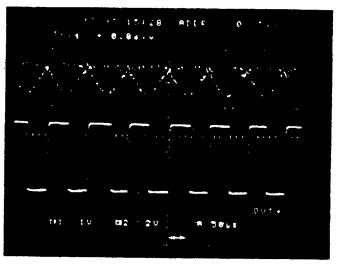

– GND

– GND

(7) IC201-Pin3: TRACK SEARCH MODE (SPDR)
2V/div 50msec/div

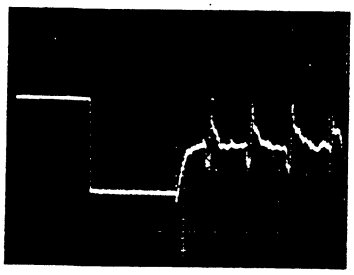

– GND

(16) IC301-Pin22: PLAY MODE (1kHz) (BCK)
2V/div 500nsec/div

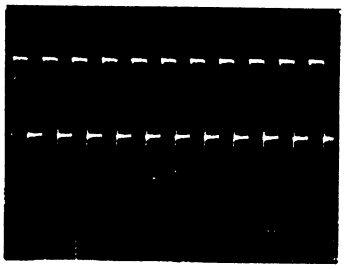

– GND

(24) : PLAY MODE
Upper: TP1-Pin1 (RF) 1V/div
Lower: IC151-Pin30 (DFCT)
5V/div 200μsec/div

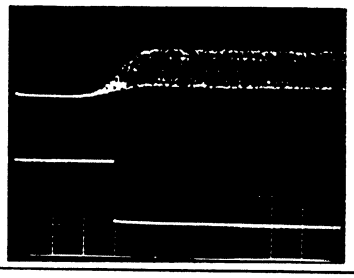

– GND

– GND

(8) IC202-Pin9: PLAY MODE (CADR)
0.2V/div 2sec/div

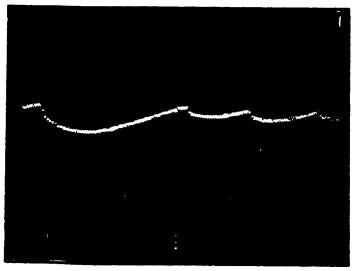

– GND

(18) IC301-Pin20: PLAY MODE (1kHz) (LRCK)
2V/div 10μsec/div

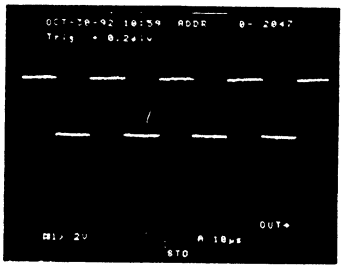

– GND

(33) IC301-Pin3: PLAY MODE (MDP)
2V/div 2μsec/div

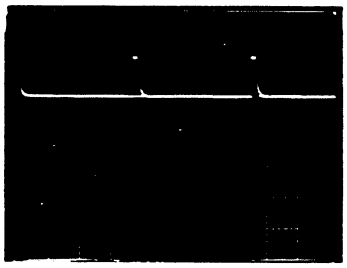

– GND

(8) IC202-Pin9: TRACK SEARCH MODE (CADR)
2V/div 200msec/div

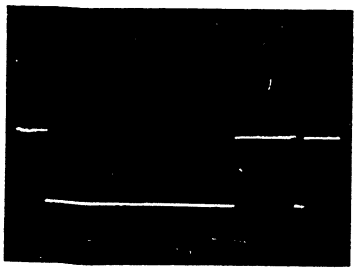

– GND

(53) IC301-Pin9: PLAY MODE (PCO)
2V/div 10μsec/div

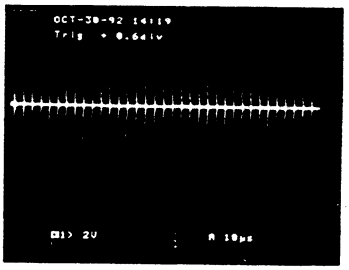

– GND

www.manualscenter.com

8. MOTHER PCB ASSY, FUNCTION PCB ASSY 1, FUNCTION PCB ASSY 2 AND MULTI MECHA ASSY (FOR XR-J22M AND XR-J11M)

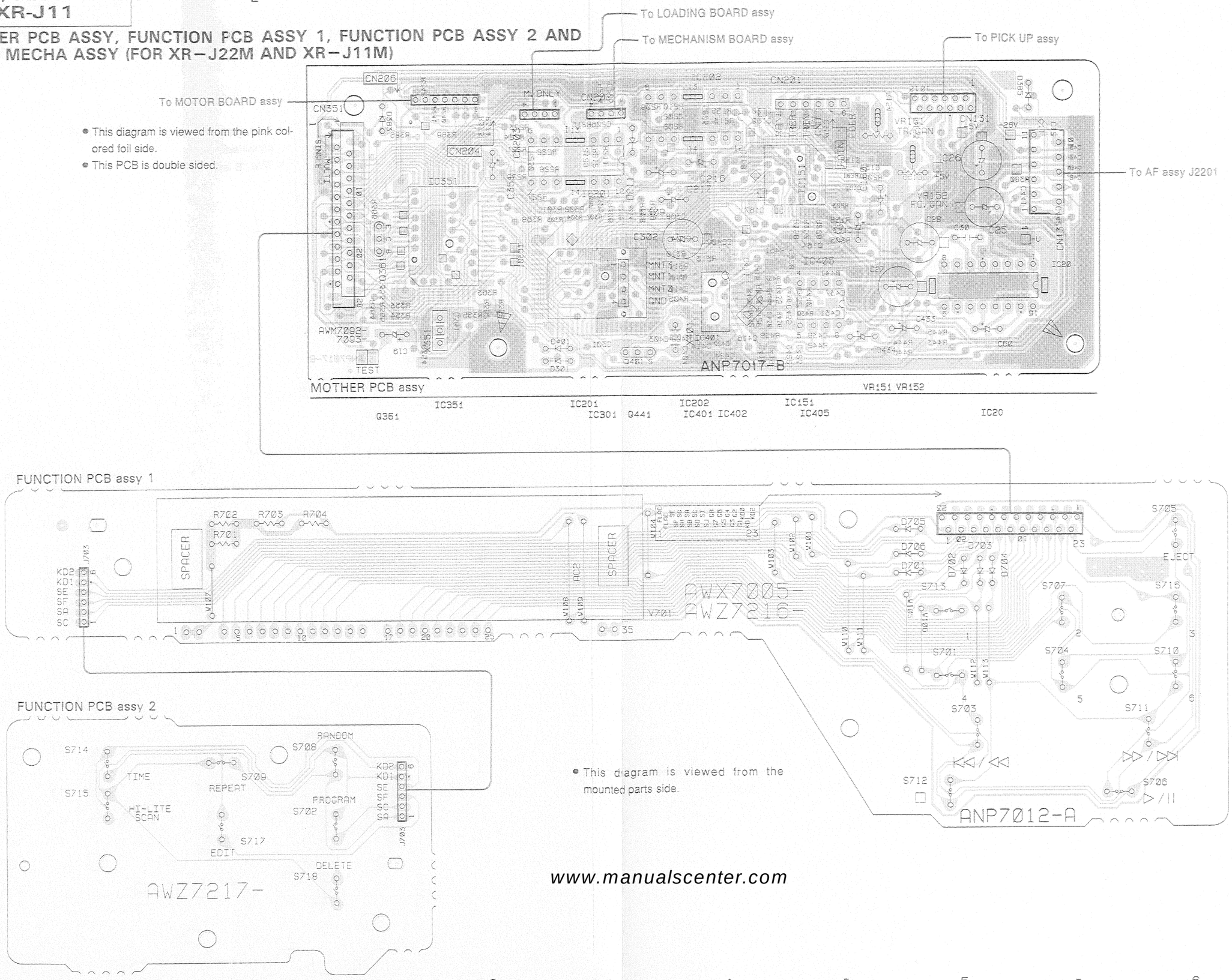

- This diagram is viewed from the pink colored foil side.
- This PCB is double sided.

- This diagram is viewed from the mounted parts side.

www.manualscenter.com

Note: Wave form (See P2-61, 2-62)

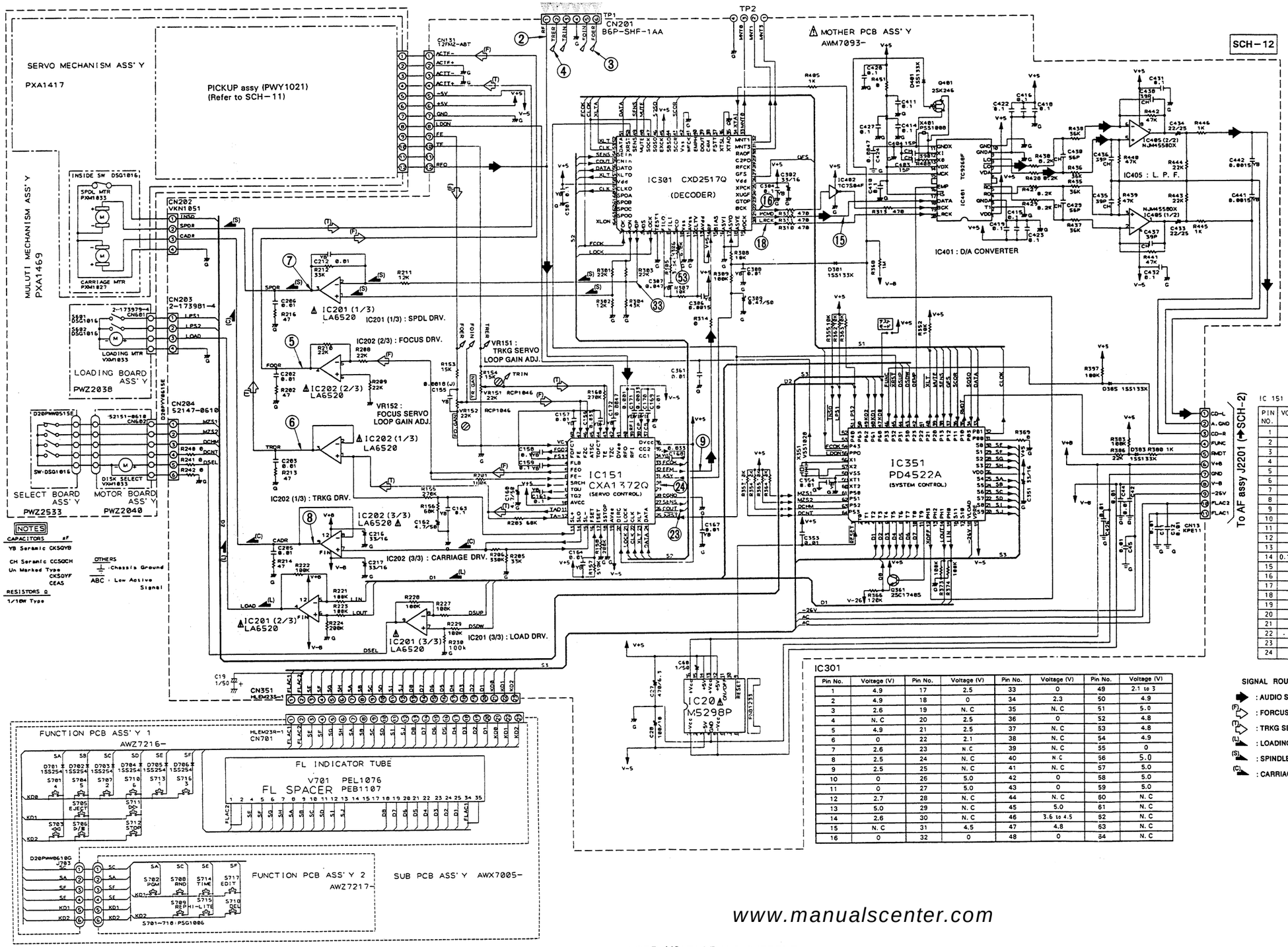

NOTES
CAPACITORS
YB Ceramic CK5QYB
CH Ceramic CC5QCH
Un Marked Type CK5QYF CEAS
RESISTORS Ω
1/10W Type
OTHERS
: Chassis Ground
ABC : Low Active Signal

IC 151

PIN NO.	VOLTAGE (V)	PIN NO.	VOLTAGE (V)
1	0	25	5.0
2	0	26	0
3	0	27	4.9
4	0	28	0
5	0.4	29	N.C
6	0	30	N.C
7	0.3	31	2.5
8	0	32	2.6
9	0	33	4.9
10	5.0	34	-1.7
11	0	35	-1.9
12	0	36	5.0
13	0	37	-0.9
14	0.1 TO 0.7	38	-2.1
15	0	39	0
16	-4.0	40	0.9
17	1.2	41	-5.0
18	0	42	0
19	-5.0	43	0
20	5.0	44	0
21	5.0	45	0
22	4.9	46	0
23	5.0	47	0
24	4.9	48	0

IC301

Pin No.	Voltage (V)	Pin No.	Voltage (V)	Pin No.	Voltage (V)	Pin No.	Voltage (V)
1	4.9	17	2.5	33	0	49	2.1 to 3
2	4.9	18	0	34	2.3	50	4.9
3	2.6	19	N. C	35	N. C	51	5.0
4	N. C	20	2.5	36	0	52	4.8
5	4.9	21	2.5	37	N. C	53	4.8
6	0	22	2.1	38	N. C	54	4.9
7	2.6	23	N.C	39	N. C	55	0
8	2.5	24	N. C	40	N. C	56	5.0
9	2.5	25	N. C	41	N. C	57	5.0
10	0	26	5.0	42	0	58	5.0
11	0	27	5.0	43	0	59	5.0
12	2.7	28	N. C	44	N. C	60	N. C
13	5.0	29	N. C	45	5.0	61	N. C
14	2.6	30	N. C	46	3.6 to 4.5	62	N. C
15	N. C	31	4.5	47	4.8	63	N. C
16	0	32	0	48	0	64	N. C

SIGNAL ROUTE
: AUDIO SIGNAL ROUTE
: FORCUS SERVO LOOP LINE
: TRKG SERVO LOOP LINE
: LOADING MOTOR ROUTE
: SPINDLE MOTOR ROUTE
: CARRIAGE MOTOR ROUTE

www.manualscenter.com

NOTE : VOLTAGE AND CURRENT
or ← V :
DC voltage (V) in PLAY mode unless otherwise noted.
⇦ mA or ← mA :
DC current in PLAY mode unless otherwise noted.
Value in ( ) is DC current in STOP mode.

SCH-12 MOTHER PCB ASSY, FUNCTION PCB ASSY 1, FUNCTION PCB ASSY 2, MULTI MECHA ASSY

MOTHER PCB ASSY, FUNCTION PCB ASSY 1, FUNCTION PCB ASSY 2, MULTI MECHA ASSY **SCH-12**