PIONEER
The Art of Entertainment

Service Manual

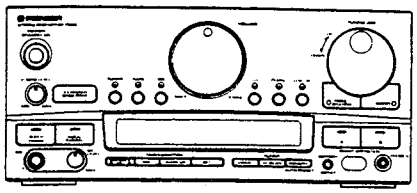

ORDER NO.
ARP2398

STERO RECEIVER

SX-P920
SX-P720

SX-P920 AND SX-P720 HAVE THE FOLLOWING :

Type	Model		Power Requirement	Remarks
	SX-P920	SX-P720		
HE	○	○	AC220V-230V, 240V (Switchable)*	
HB	○	○	AC220V-230V, 240V (Switchable)*	
HEWZI	○	○	AC220V-230V, 240V (Switchable)*	
SD	○	○	AC110V, 120V-127V, 220V, 240V (Switchable)	
KUC	—	○	AC120V only	

* Change the connection of the power transformer's primary wiring.

- This manual is applicable to SX-P920/HE, HB, HEWZI and SX-P720/HE, HB, HEWZI.
- As to the SX-P920/HB, HEWZI and SX-P720/HB, HEWZI, refer to page 54.
- As to the other types, refer to the applicable service manuals.
- These products are component of systems. As to the system composition, refer to the system manual (s).
- Each of these products does not function properly when independent ; to avoid malfunctions, be sure to connect it to the prescribed system component (s), otherwise damage may result.
- Ce manuel pour le service comprend les explications de réglage en français.
- Este manual de servicio trata del método ajuste escrito en español.

CONTENTS

1. SAFETY INFORMATION 2
2. EXPLODED VIEWS, PACKING AND PARTS LIST 3
3. SCHEMATIC DIAGRAMS AND PCB CONNECTION DIAGRAMS 7
4. PCB PARTS LIST 34
5. ADJUSTMENTS 42
5. REGLAGE 44
5. AJUSTE 46
6. IC INFORMATION 48
7. DISASSEMBLY 52
8. FOR SX-P920/HB, HEWZI AND SX-P720/HB, HEWZI TYPES 54
9. PANEL FACILITIES 86
10. SPECIFICATIONS 88

PIONEER ELECTRONIC CORPORATION 4-1, Meguro 1-Chome, Meguro-ku, Tokyo 153, Japan
PIONEER ELECTRONICS SERVICE INC. P.O. Box 1760, Long Beach, California 90801 U.S.A.
PIONEER ELECTRONICS OF CANADA, INC. 505 Cochrane Drive, Markham, Ontario L3R 8E3 Canada
PIONEER ELECTRONIC [EUROPE] N.V. Haven 1087 Keetberglaan 1, 9120 Melsele, Belgium
PIONEER ELECTRONICS AUSTRALIA PTY. LTD. 178-184 Boundary Road, Braeside, Victoria 3195, Australia TEL: [03] 580-9911

© PIONEER ELECTRONIC CORPORATION 1992

DFV JAN. 1992 Printed in Japan

www.manualscenter.com

LFDHR.4005

This service manual is intended for qualified service technicians; it is not meant for the casual do-it-yourselfer. Qualified technicians have the necessary test equipment and tools, and have been trained to properly and safely repair complex products such as those covered by this manual.
Improperly performed repairs can adversely affect the safety and reliability of the product and may void the warranty. If you are not qualified to perform the repair of this product properly and safely, you should not risk trying to do so and refer the repair to a qualified service technician.

WARNING
Lead in solder used in this product is listed by the California Health and Welfare agency as a known reproductive toxicant which may cause birth defects or other reproductive harm (California Health & Safety Code, Section 25249.5).
When servicing or handling circuit boards and other components which contain lead in solder, avoid unprotected skin contact with the solder. Also, when soldering do not inhale any smoke or fumes produced.

1. SAFETY INFORMATION

(FOR USA MODEL ONLY)

1. SAFETY PRECAUTIONS

The following check should be performed for the continued protection of the customer and service technician.

LEAKAGE CURRENT CHECK

Measure leakage current to a known earth ground (water pipe, conduit, etc.) by connecting a leakage current tester such as Simpson Model 229-2 or equivalent between the earth ground and all exposed metal parts of the appliance (input/output terminals, screwheads, metal overlays, control shaft, etc.). Plug the AC line cord of the appliance directly into a 120V AC 60Hz outlet and turn the AC power switch on. Any current measured must not exceed 0.5mA.

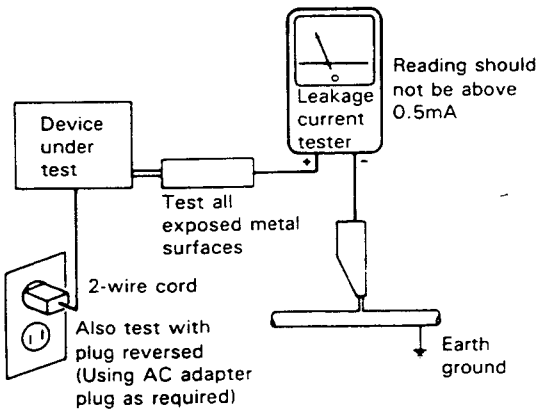

AC Leakage Test

ANY MEASUREMENTS NOT WITHIN THE LIMITS OUTLINED ABOVE ARE INDICATIVE OF A POTENTIAL SHOCK HAZARD AND MUST BE CORRECTED BEFORE RETURNING THE APPLIANCE TO THE CUSTOMER.

2. PRODUCT SAFETY NOTICE

Many electrical and mechanical parts in the appliance have special safety related characteristics. These are often not evident from visual inspection nor the protection afforded by them necessarily can be obtained by using replacement components rated for voltage, wattage, etc. Replacement parts which have these special safety characteristics are identified in this Service Manual.

Electrical components having such features are identified by marking with a ⚠ on the schematics and on the parts list in this Service Manual.
The use of a substitute replacement component which dose not have the same safety characteristics as the PIONEER recommended replacement one, shown in the parts list in this Service Manual, may create shock, fire, or other hazards.

Product Safety is continuously under review and new instructions are issued from time to time. For the latest information, always consult the current PIONEER Service Manual. A subscription to, or additional copies of, PIONEER Service Manual may be obtained at a nominal charge from PIONEER.

www.manualscenter.com

2. EXPLODED VIEWS, PACKING AND PARTS LIST

NOTES:
- *The parts with an encircled number are generally unavailable because they are not in our Master Spare Parts List.*
- *The ⚠ mark found on some component parts indicates the importance of the safety factor of the part. Therefore, when replacing, be sure to use parts of identical designation.*
- *Parts marked by "◉" are not always kept in stock. Their delivery time may be longer than usual or they may be unavailable.*

2.1 PARTS LIST OF SX – P920/HE

Mark	No.	Description	Parts No.
	1	KNOB (VOLUME)	AAB1249
	2	KNOB (JOG)	AAB1251
	3	KNOB (P.BASS LEVEL, MIC LEVEL)	AAB1253
	4	FUNCTION BUTTON (TUNER, TAPE, CD, LD, PHONO, VCR/DAT)	AAD2067
	5	BAND BUTTON (FREQ. STATION, BAND)	AAD2069
	6	POWER BUTTON	AAD2070
	7	P-BASS BUTTON (2) ASSY (SUPER P. BASS, VOCAL CANCEL)	AAD2074
	8	AI BUTTON ASSY (SMART OPERATION, MEMORY)	AAD2080
	9	FUNCTION LENS	AAK2206
	10	FILTER (REMOCON)	AAK2208
	11	DECORATIVE PLATE (TUNER)	AAK2255
◉	12	MAIN ASSEMBLY	AWZ3719
◉	13	SUB. POWER ASSEMBLY	AWZ3727
	14	SCREW	ABA – 258
	15	SCREW (STEEL)	ABA1095
	16	NUT	ABN1016
⚠	17	AC POWER CORD	ADG1019
	18	RUBBER SHEET	AEB1111
	19	BINDER	AEC – 826
	20	STRAIN RELIEF	AEC – 882
	21	SPACER	AEC1236
	22	PCB SPACER (3 × 8)	AEC1371
	23	PCB SPACER (3 × 12)	AEC1372
	24	.....	
◉	25	FR. AMP ASSEMBLY	AWZ3734
	26	FRONT PAD	AHA1453
	27	REAR PAD	AHA1454
	28	PACKING CASE	AHD2179
	29	PACKING SHEET	AHG1093
	30	MIC ASSEMBLY	AWZ3736
	31	FRONT PANEL ASSY	AMB1874
	32	PCB MOULD	AMR2115
	33	CHASSIS	ANA1155
	34	REAR PANEL	ANC1777
	35	BONNET (FE)	ANE1309
	36	HEAT SINK	ANH1352
	37	SHIELD BOX	ANK1179
	38	OPERATING INSTRUCTIONS (German, Italian)	ARC1305
	39	OPERATING INSTRUCTIONS (English, French, German, Italian)	ARC1306
	40	OPERATING INSTRUCTIONS (English, French)	ARE1211
	41	HEAD. P ASSEMBLY	AWZ3737
	42	CONNECT ASSEMBLY	AWZ3739
	43	TUNER ASSEMBLY	AWE1226
◉	44	DISPLAY ASSEMBLY	AWZ3705
◉	45	VR ASSEMBLY	AWZ3708
	46	DC MOTOR	AXM1013
	47	SCREW	BBZ30P060FZK
	48	SCREW	BBZ30P080FZK
	49	SCREW	BBZ40P060FZK
	50	SCREW	BPZ26P080FMC
	51	NUT	NK90FUC
	52	SCREW	PPZ50P100FZK
	53	FOOT (RUBBER)	REC – 434
	54	SCREW	ABA1024
	55	SCREW	VBZ30P160FMC
⚠	56	FUSE (T1.6A/250V, FU51)	AEK – 510
	57	FFC (J27)	ADD1100
⚠	58	POWER TRANSFORMER (T1)	ATS1378
◉	59	REGULATOR ASSEMBLY	AWZ4009

2.2 PARTS LIST OF SX – P720/HE

Mark	No.	Description	Parts No.
	1	KNOB (VOLUME)	AAB1249
	2	KNOB (JOG)	AAB1251
	3	KNOB (P.BASS LEVEL)	AAB1253
	4	FUNCTION BUTTON (TUNER, TAPE, CD, LD, PHONO, VCR/DAT)	AAD2067
	5	BAND BUTTON (FREQ. STATION, BAND)	AAD2069
	6	POWER BUTTON	AAD2070
	7	P-BASS BUTTON (1) ASSY (SUPER P. BASS)	AAD2076
	8	AI BUTTON ASSY (SMART OPERATION, MEMORY)	AAD2080
	9	FUNCTION LENS	AAK2206
	10	FILTER (REMOCON)	AAK2208
	11	DECORATIVE PLATE (TUNER)	AAK2255
◉	12	MAIN ASSEMBLY	AWZ3714
◉	13	SUB. POWER ASSEMBLY	AWZ3722
	14	SCREW	ABA – 258
	15	SCREW (STEEL)	ABA1095
	16	NUT	ABN1016
⚠	17	AC POWER CORD	ADG1019
	18	RUBBER SHEET	AEB1111
	19	BINDER	AEC – 826
	20	STRAIN RELIEF	AEC – 882
	21	SPACER	AEC1236
	22	PCB SPACER (3 × 8)	AEC1371
	23	PCB SPACER (3 × 12)	AEC1372
	24	.....	
◉	25	FR. AMP ASSEMBLY	AWZ3730
	26	FRONT PAD	AHA1453
	27	REAR PAD	AHA1454
	28	PACKING CASE	AHD2178
	29	PACKING SHEET	AHG1093
	30	.....	
	31	FRONT PANEL ASSY	AMB1876
	32	PCB MOULD	AMR2115
	33	CHASSIS	ANA1155
	34	REAR PANEL	ANC1778
	35	BONNET (FE)	ANE1309
	36	HEAT SINK	ANH1352
	37	SHIELD BOX	ANK1179
	38	OPERATING INSTRUCTIONS (German, Italian)	ARC1305
	39	OPERATING INSTRUCTIONS (English, French, German, Italian)	ARC1306
	40	OPERATING INSTRUCTIONS (English, French)	ARE1211
	41	HEAD. P ASSEMBLY	AWZ3737
	42	CONNECT ASSEMBLY	AWZ3739
	43	TUNER ASSEMBLY	AWE1226
◉	44	DISPLAY ASSEMBLY	AWZ3701
◉	45	VR ASSEMBLY	AWZ3708
	46	DC MOTOR	AXM1013
	47	SCREW	BBZ30P060FZK
	48	SCREW	BBZ30P080FZK
	49	SCREW	BBZ40P060FZK
	50	SCREW	BPZ26P080FMC
	51	NUT	NK90FUC
	52	SCREW	PPZ50P100FZK
	53	FOOT (RUBBER)	REC – 434
	54	SCREW	ABA1024
	55	SCREW	VBZ30P160FMC
⚠	56	FUSE (T1.25A/250V, FU51)	AEK – 509
	57	FFC (J27)	ADD1100
⚠	58	POWER TRANSFORMER (T1)	ATS1374
◉	59	REGULATOR ASSEMBLY	AWZ4009

● PACKING (SX – P920/HE & SX – P720/HE)

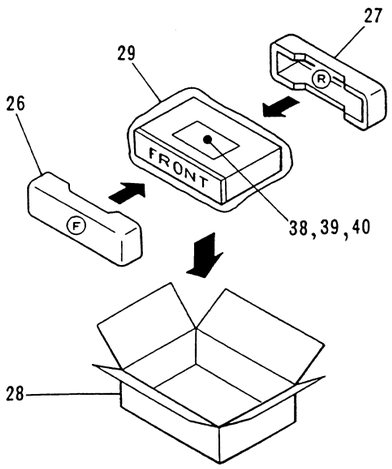

www.manualscenter.com

● EXPLODED VIEWS
(SX – P920/HE & SX – P720/HE)

NOTE : Screws adjacent to ▼ mark on the product are used for disassembly.

Parts No.

AWZ3737
AWZ3739
AWE1226
AWZ3701
AWZ3708

AXM1013
BBZ30P060FZK
BBZ30P080FZK
BBZ40P060FZK
BPZ26P080FMC

NK90FUC
PPZ50P100FZK
REC – 434
ABA1024
VBZ30P160FMC

AEK – 509
ADD1100
ATS1374
AWZ4009

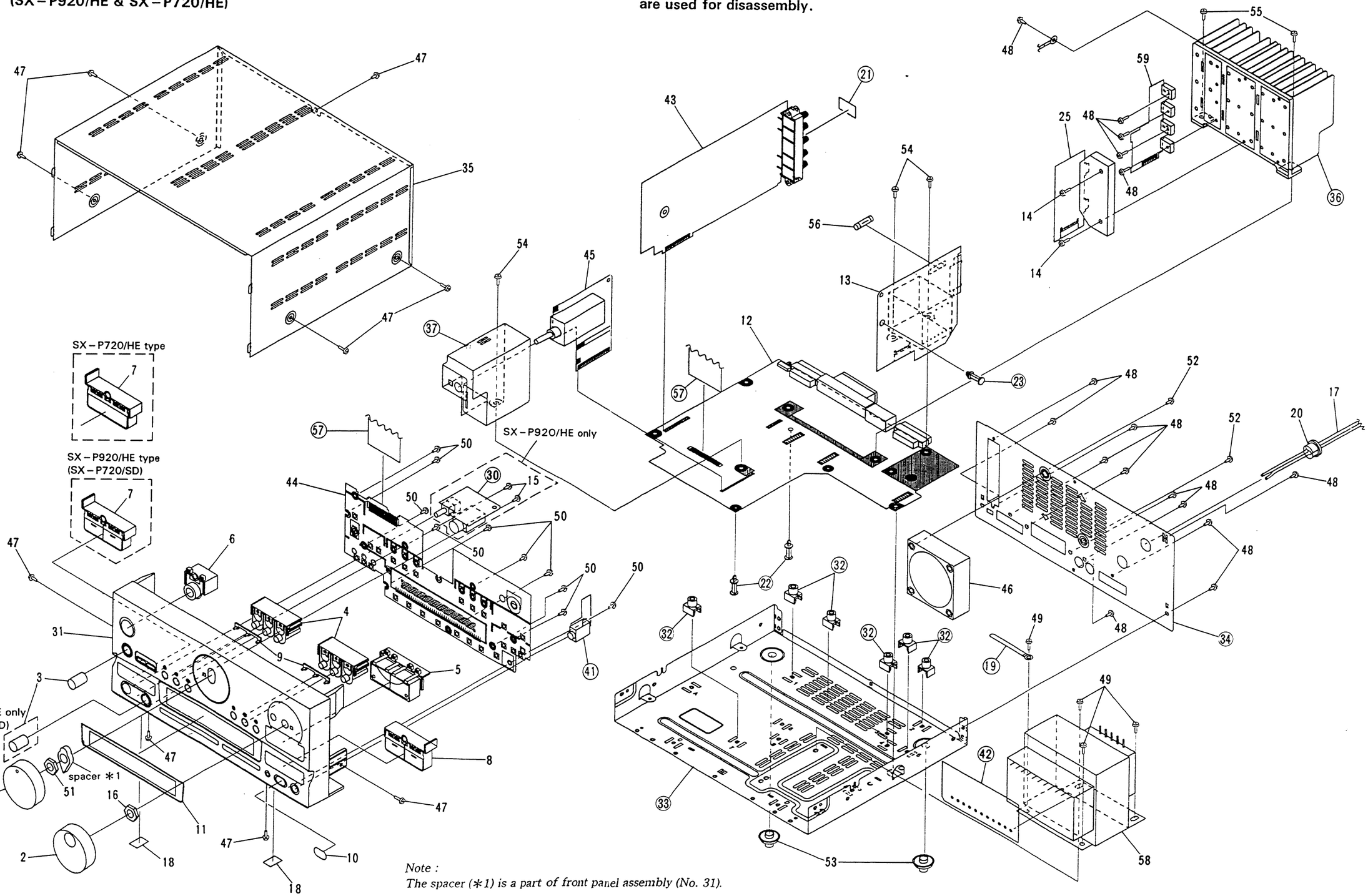

Note :
The spacer (＊1) is a part of front panel assembly (No. 31).

www.manualscenter.com

3. SCHEMATIC DIAGRAMS AND PCB CONNECTION DIAGRAMS

(SX-P920/HE & SX-P720/HE)

3.1 OVER ALL SCHEMATIC DIAGRAM

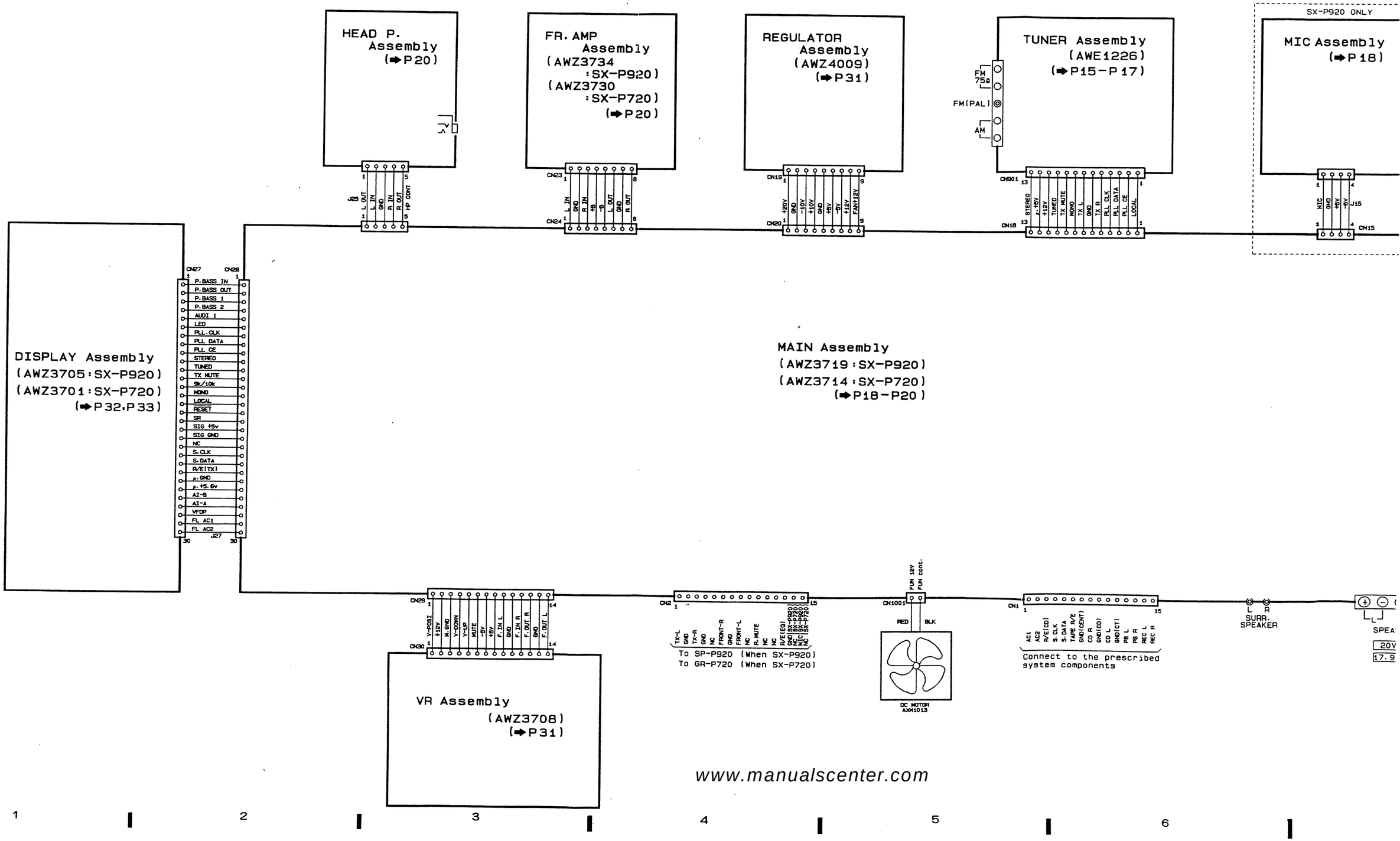

www.manualscenter.com

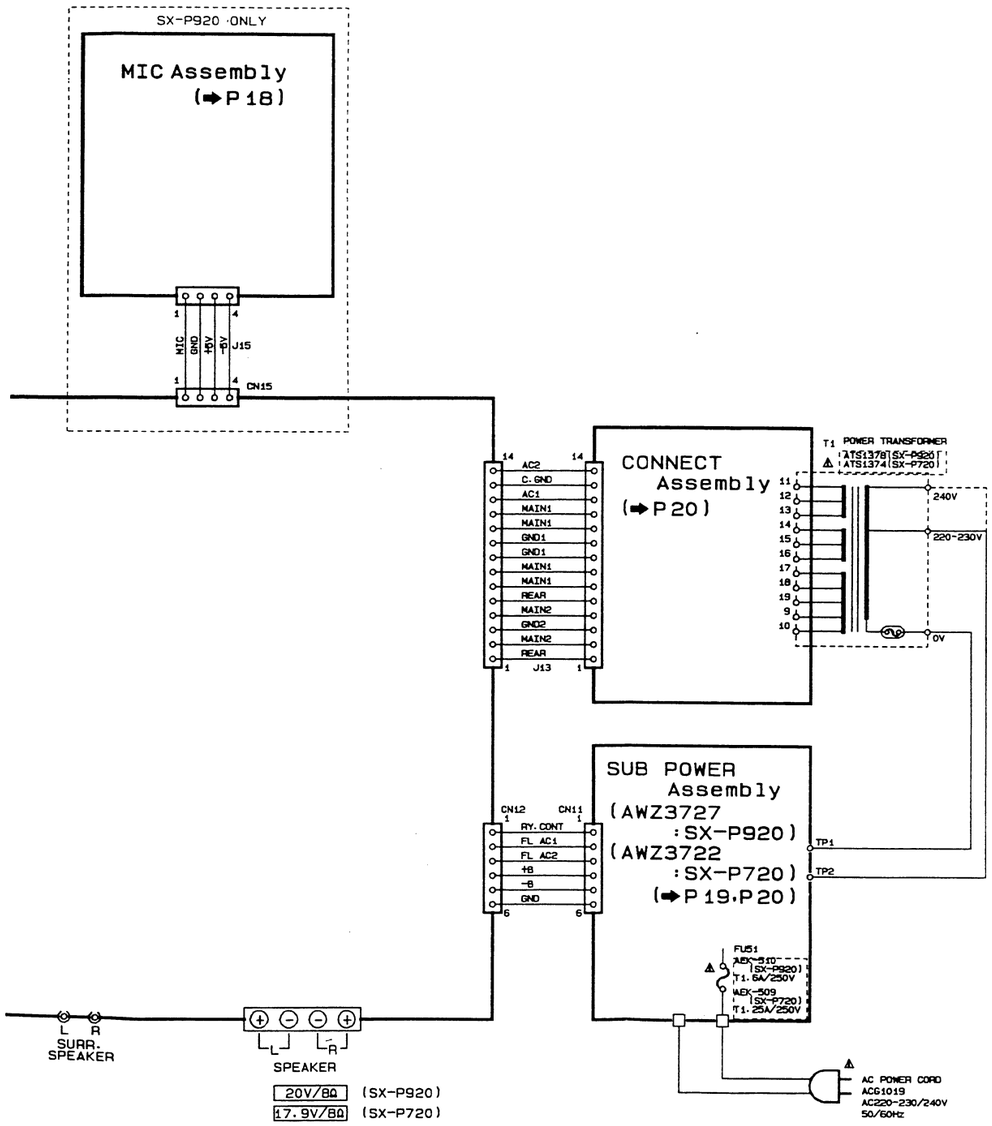

1. RESISTORS:
Indicated in Ω, ¼W, ⅛W. ±5% tolerance unless otherwise noted k : kΩ, M : MΩ, (F) : ±1%, (G) : ±2%, (K) : ±10% (M); ±20% tolerance

2. CAPACITORS:
Indicated in capacity (μF)/voltage (V) unless otherwise noted p : pF
Indication without voltage is 50V except electrolytic capacitor.

3. VOLTAGE, CURRENT:
▭ : Signal voltage at (SX-P920 : 50W + 50W, SX-P720 : 40W + 40W, 8Ω) output (1kHz)
▭ : DC voltage (V) at no input signal
[a] and [b] in the circuit diagram describe the following :
a = SX-P920
b = SX-P720
None = SX-P920 and SX-P720
Value in ( ) is DC voltage at rated power.
⇦ mA : DC current at no input signal
mV : Signal voltage at FM 1kHz ±75kHz

4. OTHERS:
➡ : Signal route.
⊘ : Adjusting point.
The ⚠ mark found on some component parts indicates the importance of the safety factor of the part. Therefore, when replacing, be sure to use parts of identical designation.
※ marked capacitors and resistors have parts numbers.
▼ (RED) : TEST POINT
This is the basic schematic diagram, but the actual circuit may vary due to improvements in design.

5. SWITCHES (The underline indicates the switch position)

DISPLAY Assembly

S701	LD
S702	VCR/DAT
S703	PHONO
S704	TAPE
S705	TUNER
S706	CD
S709	POWER STANDBY/ON
S710	AI. A
S711	SUPER P. BASS (SX-P920 ONLY)
S712	AI. B
S713	AI. MEMORY
S714	AUDITION (SX-P920 ONLY)
S715	SUPER P. BASS (SX-P720 ONLY)
S1001	BAND
S1002	M. SCAN
S1003	CLOCK ADJ
S1005	MEMORY
S1006	SET
S1008	LOCAL
S1009	WAKE UP
S1010	FREQ/STATION
S1011	REC
S1030	TUNING JOG

Line Voltage Selection
(For HE, HB and HEWZI types)

Line voltage can be changed with the following steps.

1. Disconnect the AC Power cord.
2. Remove the top cover.
3. Change the connection with the power transformer (T1) primary taps.

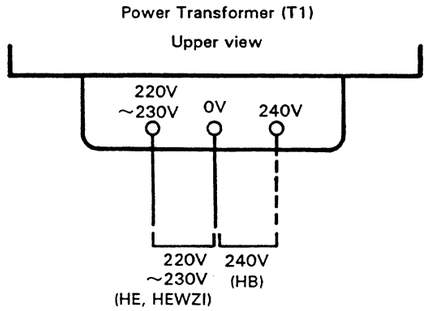

4. Stick the line voltage label on the rear panel.

Part No.	Description
AAX-193	220V label
AAX-192	240V label

www.manualscenter.com

www.manualscenter.com

3.2 TUNER ASSEMBLY

This P. C. B. connection diagram is viewed from the foil side.

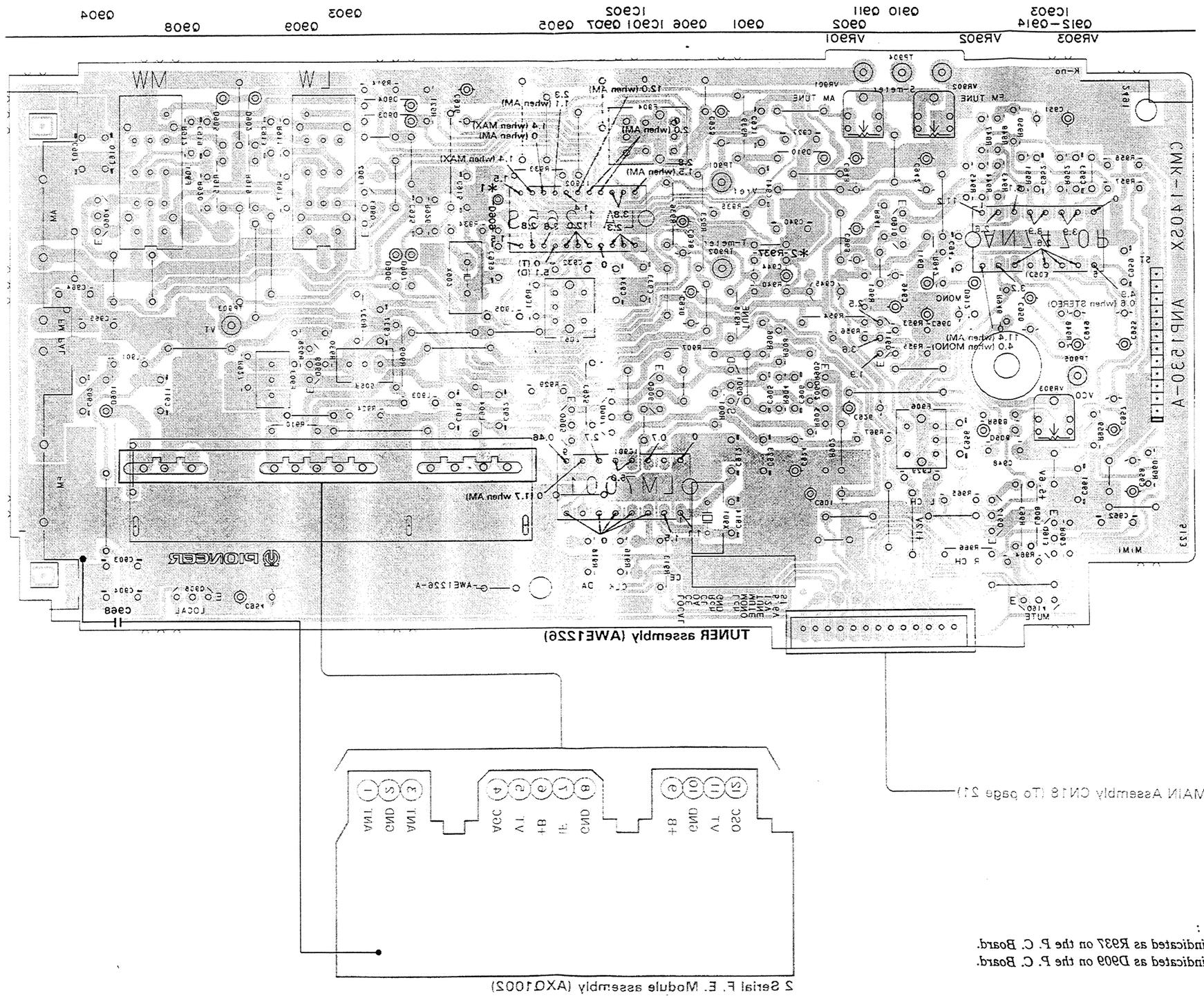

This P. C. B connection diagram is viewed from the parts mounted side.

www.manualscenter.com

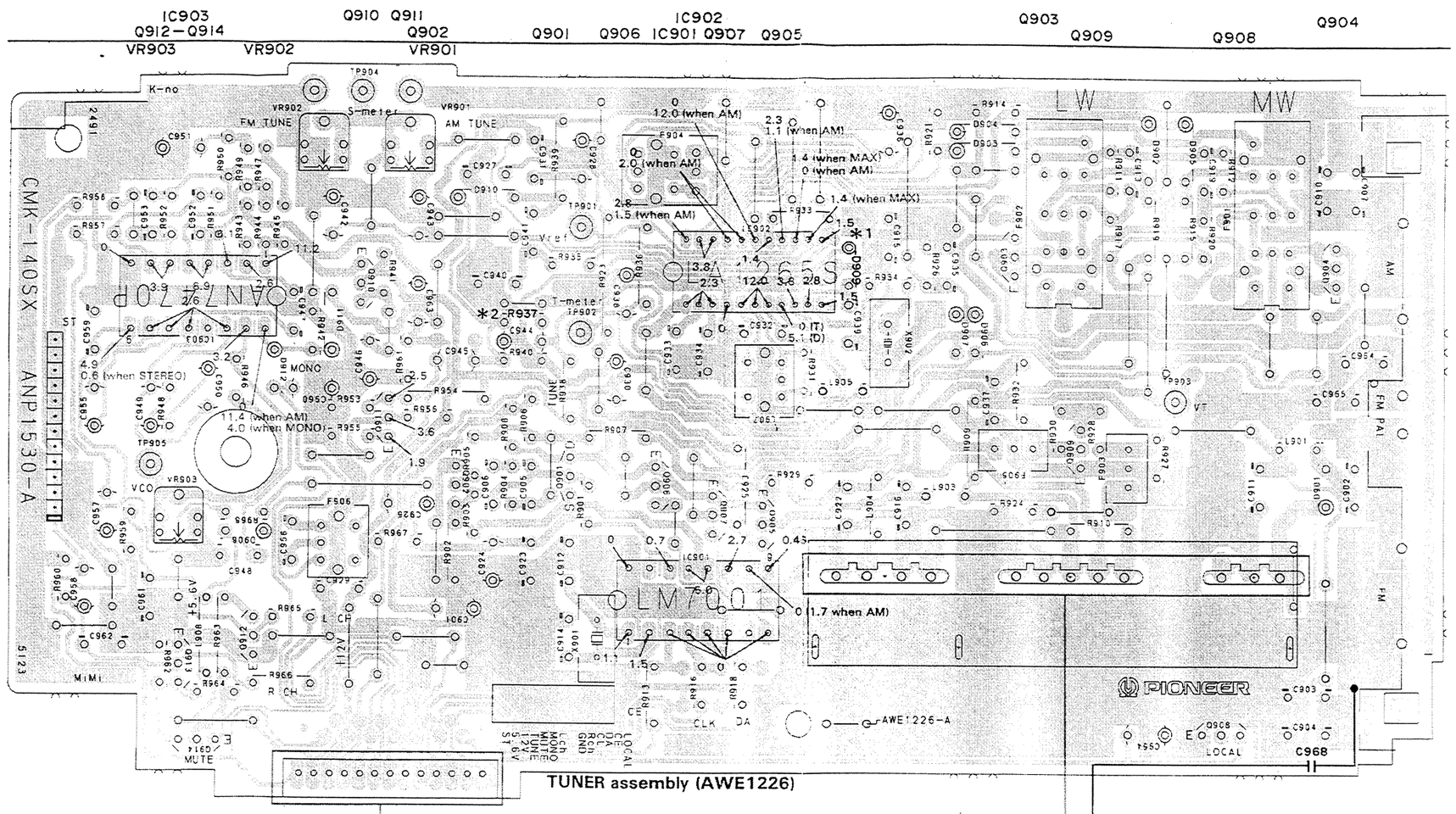

To MAIN Assembly CN18 (To page 21)

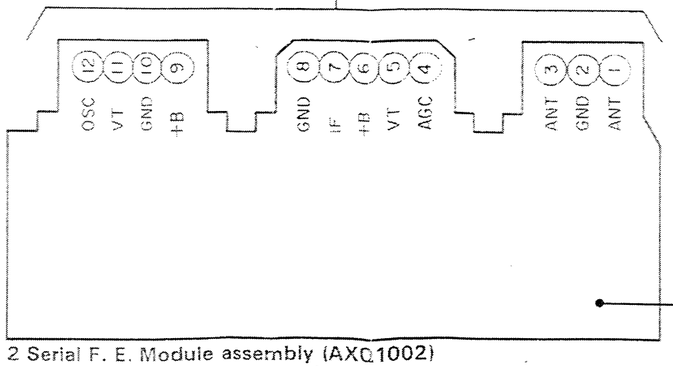

2 Serial F. E. Module assembly (AXQ1002)

NOTE :
**1 is indicated as R937 on the P. C. Board.*
**2 is indicated as D909 on the P. C. Board.*

NOTE

1. The P.C.B connection diagram is viewed from the parts mounted side.
2. The parts which have been mounted on the board can be replaced with those shown with the corresponding wiring symbols listed in the following Table.

P.C.B. pattern diagram indication	Corresponding part symbol	Part Name
Q504 E C B	E C B or E C B	Transistor
Q215 C E B	E C B or E C B	Radiator type transistor
D203	D203	Diode
R237	R237	Resistor
C913	C913	Capacitor (Polarized)
C518	C518	Capacitor (Non-polarized)

Others

P.C.B. pattern diagram indication	Part Name
IC	IC
S	Switch
RY	Relay
L	Coil
F	Filter
VR	Variable resistor or Semi fixed resistor

3. The capacitor terminal marked with ⊖(double circles) shows negative terminal.
4. The diode terminal marked with ⊖(double circles) shows cathode side.
5. The transistor terminal to which E is affixed shows the emitter.

IC901 LM7001

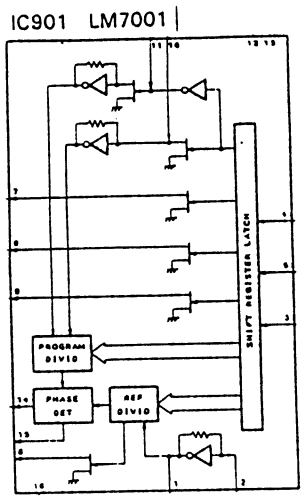

IC901 (LM7001)

Pin No.	Voltage	Pin No.	Voltage
1	1.1	9	0.46
2	1.5	10	0 (1.7 when AM)
3	0	11	2.7
4	0	12	5.0
5	0	13	5.0
6	0	14	0.7
7	—	15	—
8	0	16	0

IC902 LA1265S

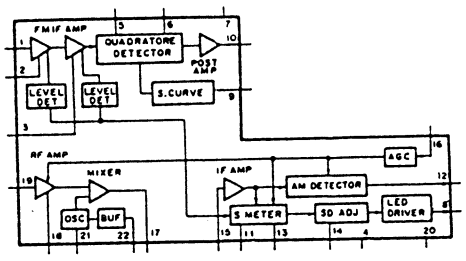

IC902 (LA1265S)

Pin No.	Voltage	Pin No.	Voltage	Pin No.
1	2.3	10	2.8	17
2	2.3	11	1.5	
3	2.3	12	1.5	18
4	0	13	1.4 (when MAX)	
5	12.0	14	1.4 (when MAX)	19
6	12.0		0 (when AM)	
7	12.0	15	2.3	20
8	0 (T)		1.1 (when AM)	21
	5.1 (D)	16	1.4	22
9	3.8			

NOTE :
(T) when TUNE IND. is ON, (D) when TUNE IND. is OFF.

www.manualscenter.com

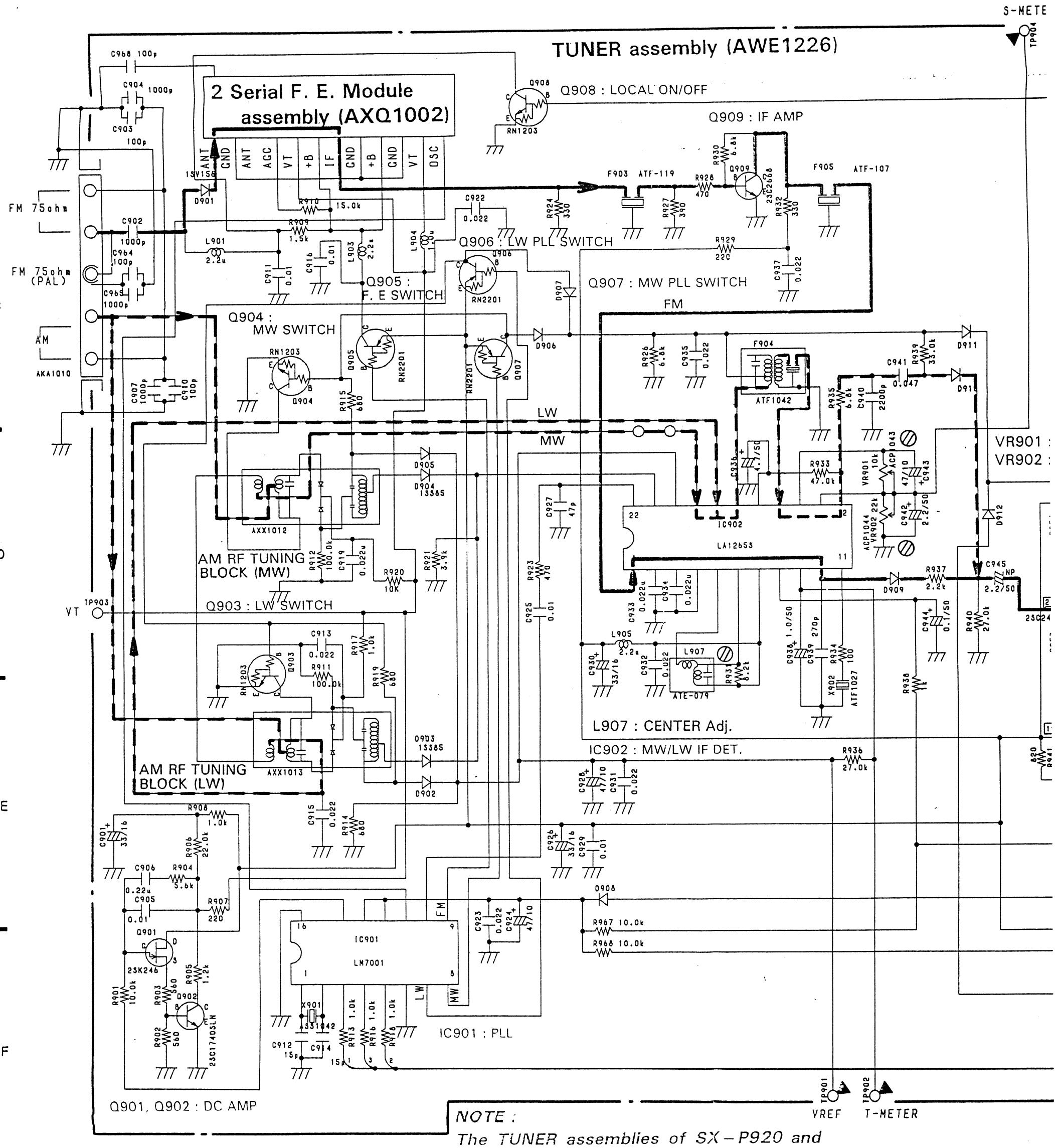

NOTE :
The TUNER assemblies of SX-P920 and SX-P720 types are the same.

Voltage	Pin No.	Voltage
2.8	17	0
1.5		12.0 (when AM)
1.5	18	0
1.4 (when MAX)		2.0 (when AM)
1.4 (when MAX)	19	0
0 (when AM)		2.0 (when AM)
2.3	20	3.8
1.1 (when AM)	21	3.8
1.4	22	2.8
		1.5 (when AM)

n TUNE IND. is OFF.

IC903 AN7470P

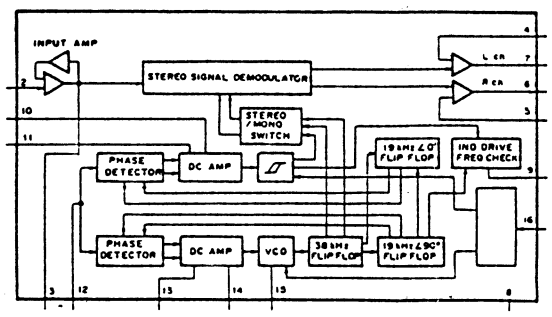

IC903 (AN7470P)

Pin No.	Voltage	Pin No.	Voltage	Pin No.	Voltage
1	11.2	9	4.9	15	3.2
2	2.6		0.6 (when STEREO)	16	0
3	6.1				11.4 (when AM)
4	8.9	10	2.6		
5	8.9	11	2.6		4.0 (when MONO)
6	3.9	12	2.6		
7	3.9	13			
8	0	14	2.6		

S-METER TP904

VCO TP905

: MAIN (FM/MW/LW) & FM

: MW & LW

VR903 : VCO Adj.

VR901 : MW TUNED IND. Adj.

VR902 : FM TUNED IND. Adj.

Q911 : AMP

IC903 : FM MPX

Q910 : RIPPLE FILTER

Q912, Q913 : MUTE

Q914 : MUTE SWITCH

FM/MW/LW

LOCAL
PLL CE
PLL DA
PLL CL
Rch
GND
Lch
MONO
MUTE
TUNE
+12V
+5.6V
STEREO

To MAIN Assembly CN18 (To page 18)

OUTPUT LEV
650mV

www.manualscenter.com

3 MAIN ASSEMBLY, SUB. POWER ASSEMBLY, FR. AMP ASSEMBLY, MIC ASSEMBLY, HEAD. P ASSEMBLY AND CONNECT ASSEMBLY

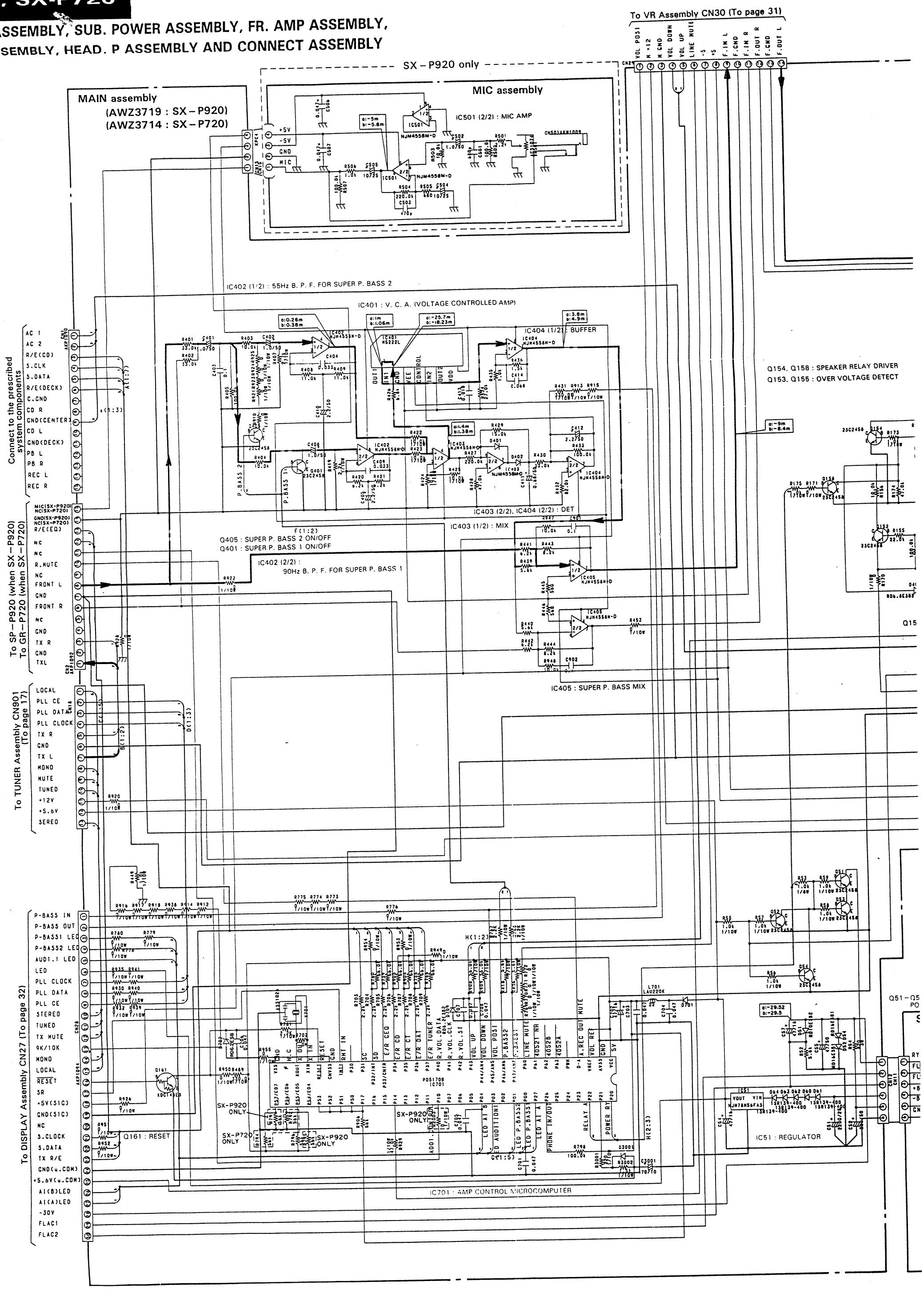

www.manualscenter.com

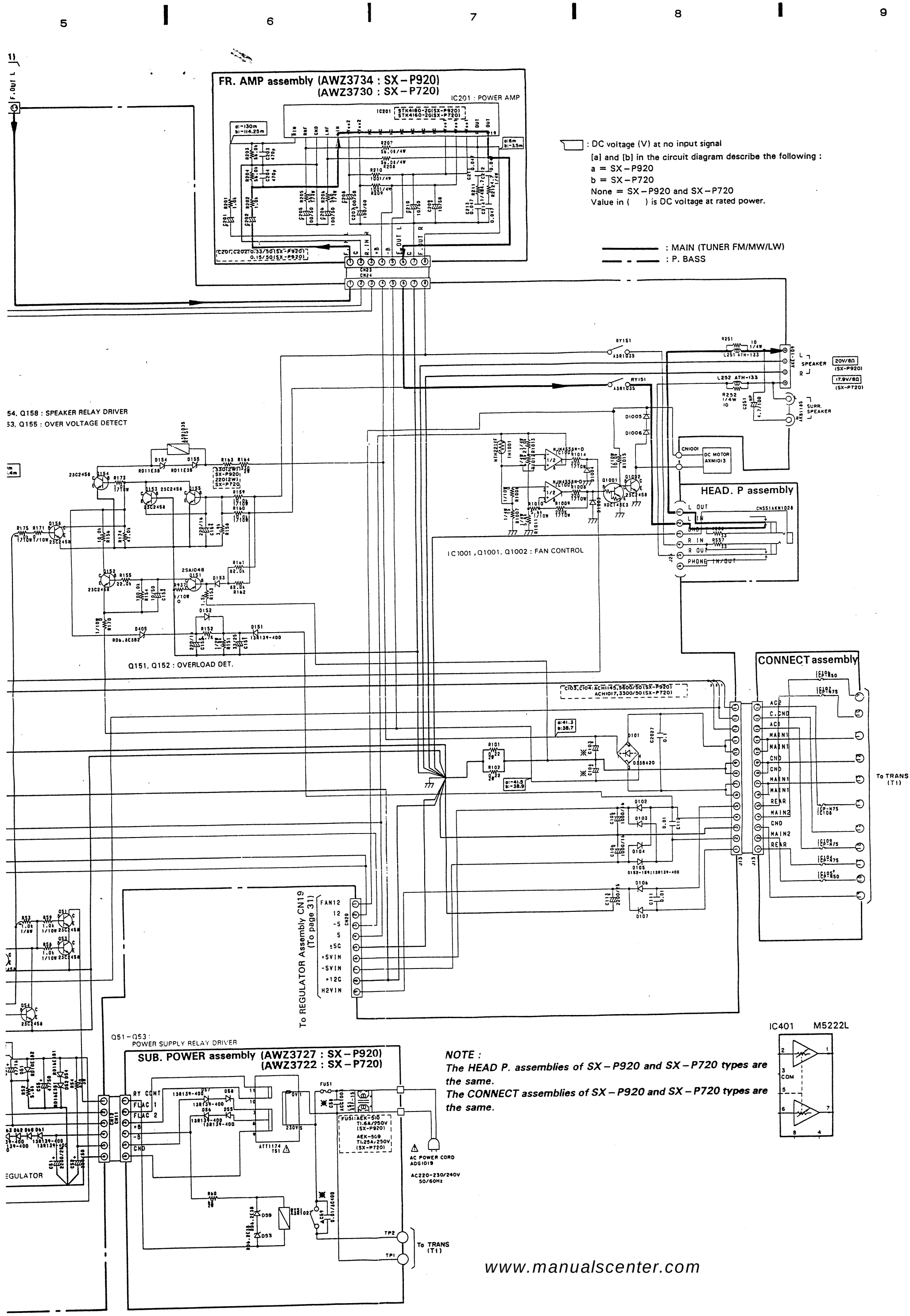

NOTE :
The HEAD P. assemblies of SX-P920 and SX-P720 types are the same.
The CONNECT assemblies of SX-P920 and SX-P720 types are the same.

www.manualscenter.com

www.manualscenter.com

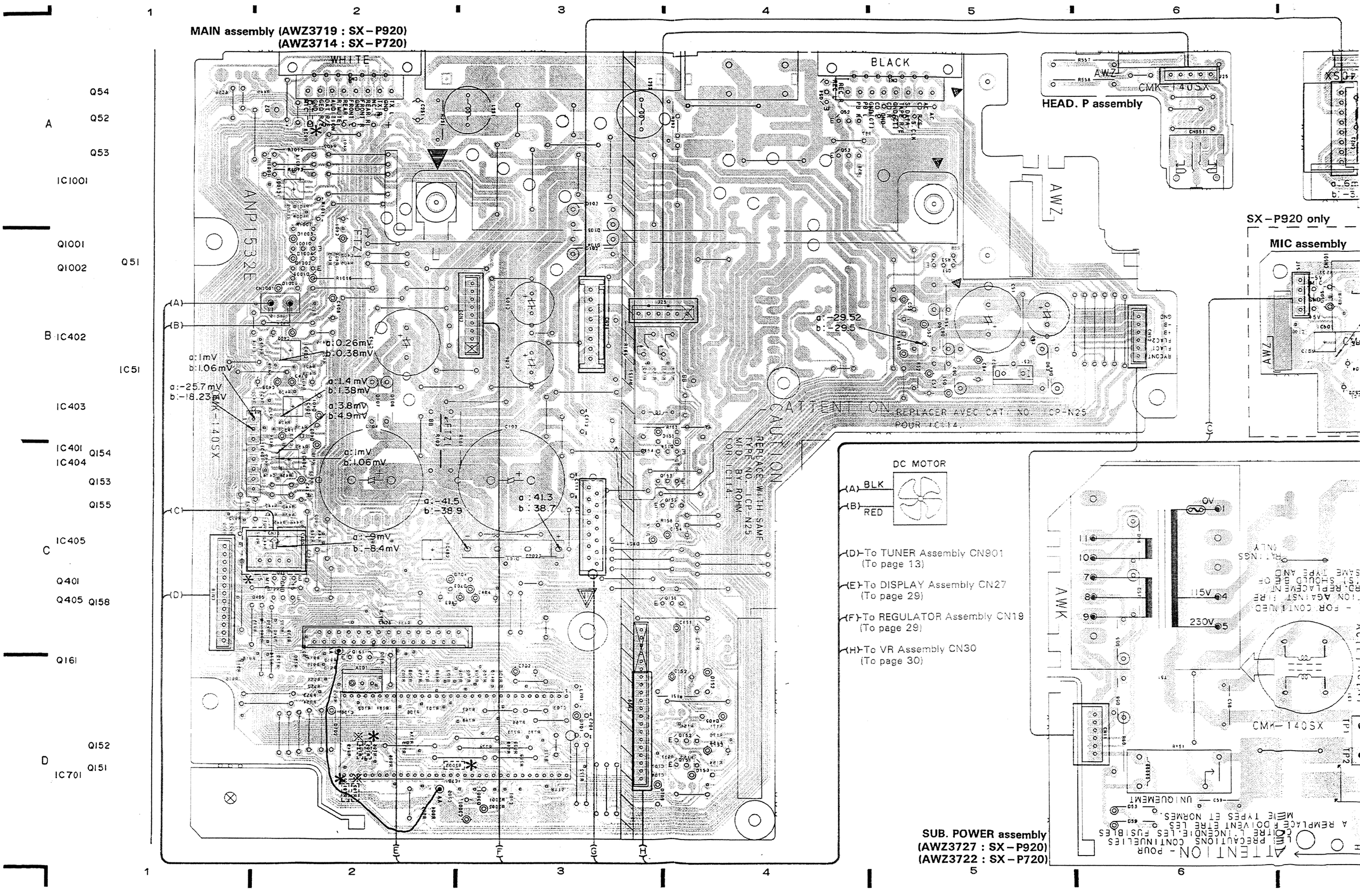

www.manualscenter.com

SX-P920, SX-P720

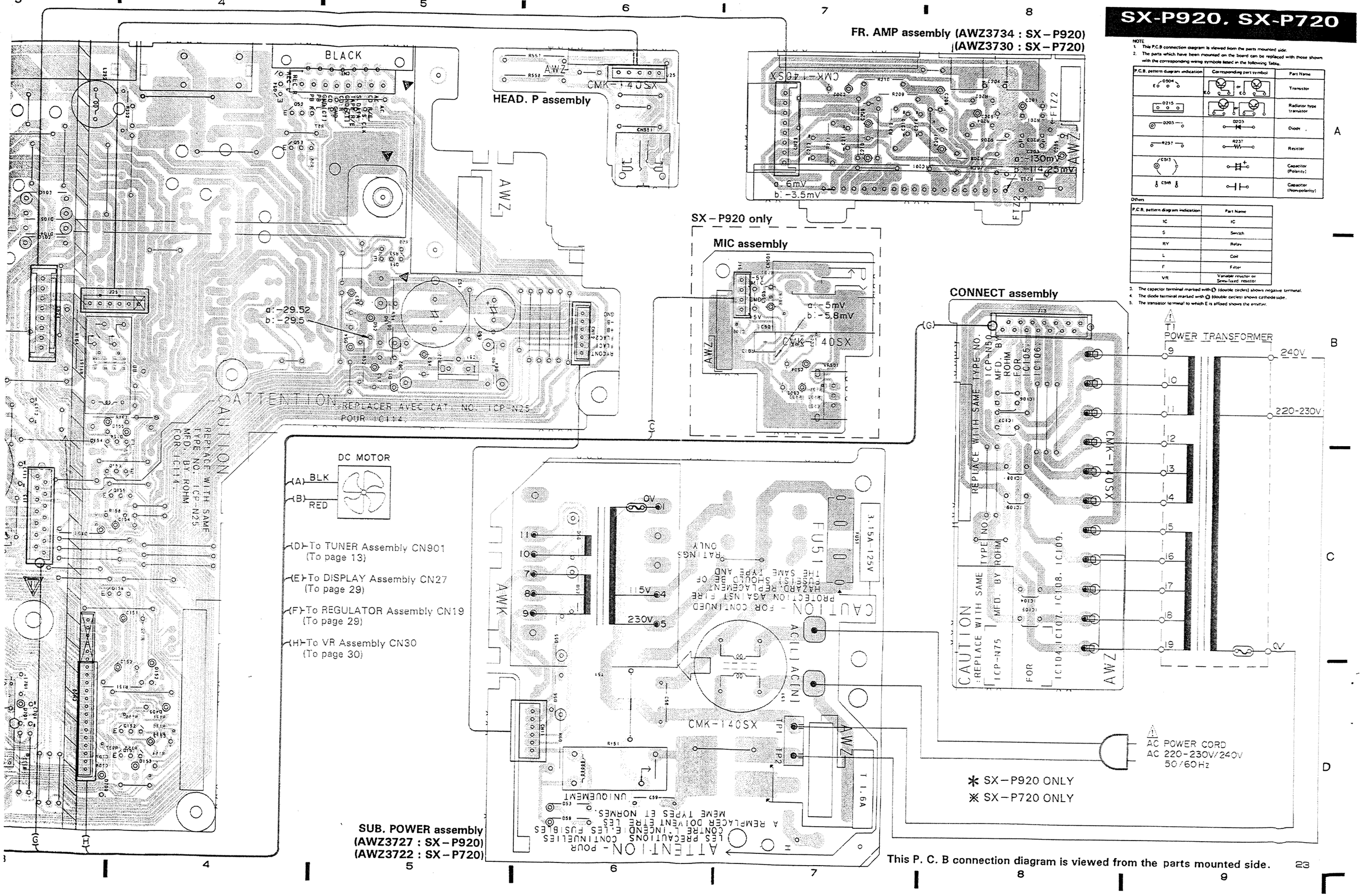

NOTE

1. This P.C.B connection diagram is viewed from the parts mounted side.
2. The parts which have been mounted on the board can be replaced with those shown with the corresponding wiring symbols listed in the following Table.

P.C.B. pattern diagram indication	Corresponding part symbol	Part Name
Q504	Q	Transistor
Q215	Q	Radiator type transistor
D203	D203	Diode
R237	R237	Resistor
C513	C	Capacitor (Polarity)
C5M	C	Capacitor (Non-polarity)

Others

P.C.B. pattern diagram indication	Part Name
IC	IC
S	Switch
RY	Relay
L	Coil
F	Filter
VR	Variable resistor or Semi-fixed resistor

3. The capacitor terminal marked with ⊖ (double circles) shows negative terminal.
4. The diode terminal marked with ⊖ (double circles) shows cathode side.
5. The transistor terminal to which E is affixed shows the emitter.

www.manualscenter.com

SX-P920, SX-P720

This P. C. B. connection diagram is viewed from the foil side.

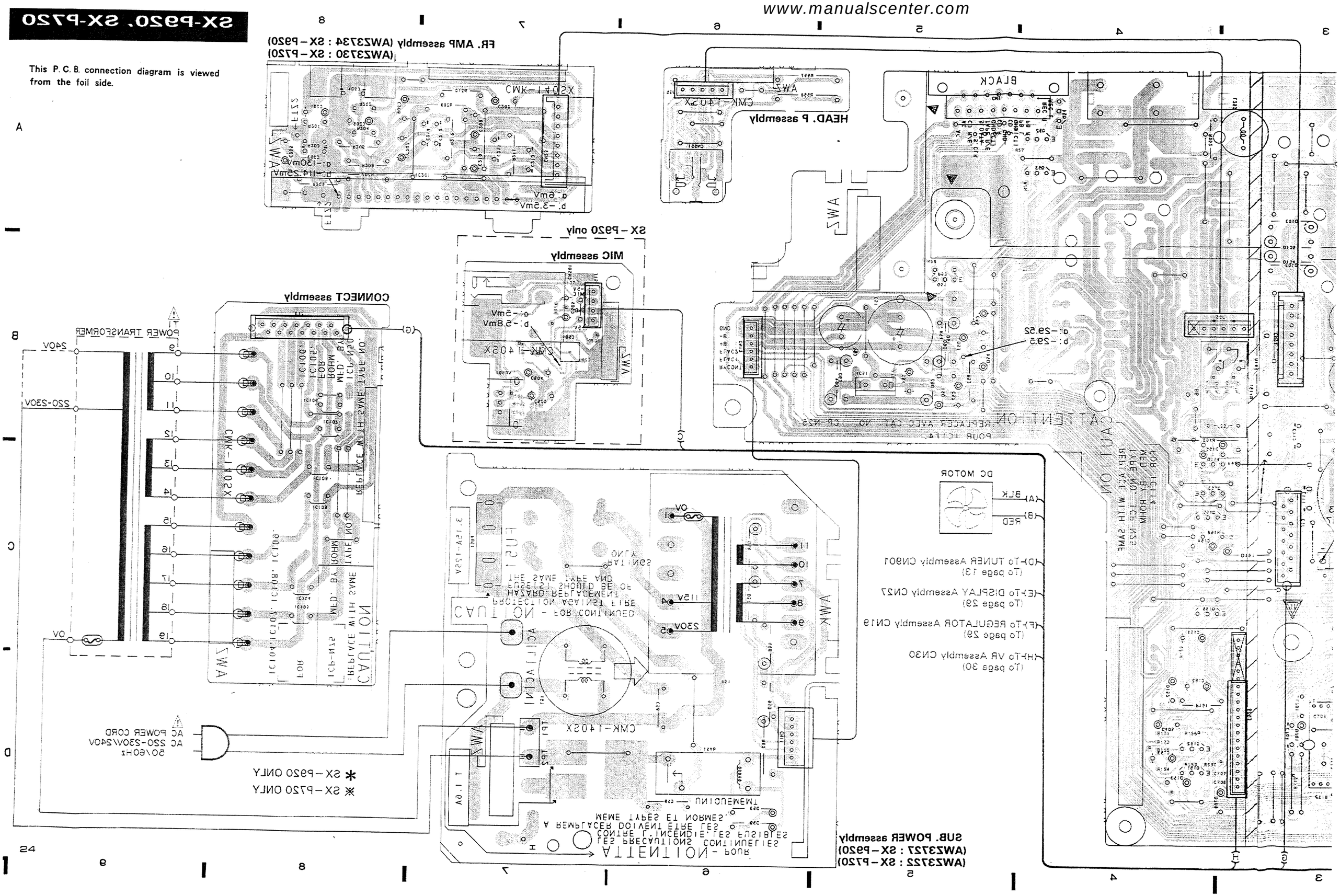

www.manualscenter.com

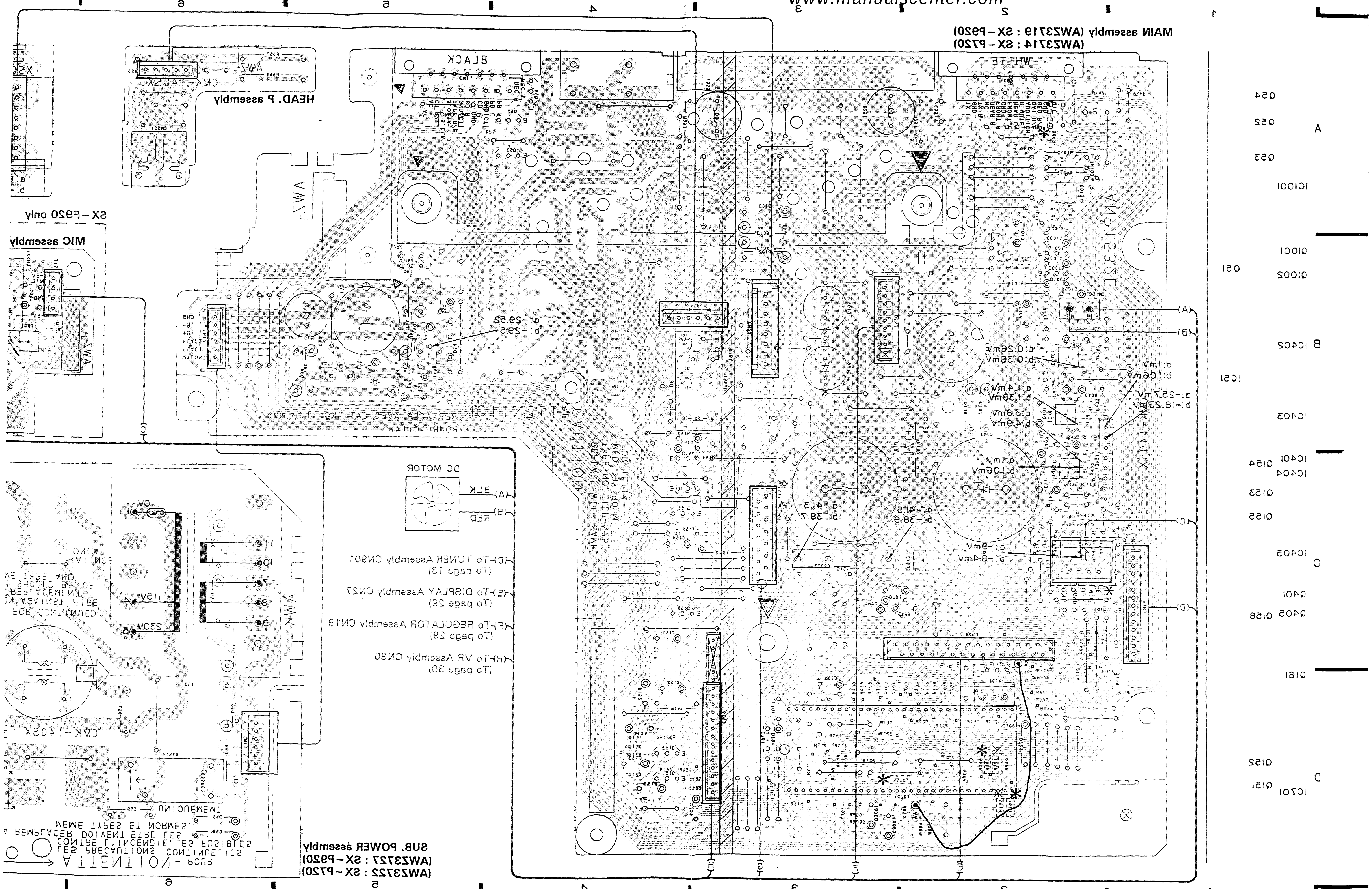

3.4 DISPLAY ASSEMBLY, VR ASSEMBLY AND REGULATOR ASSEMBLY

This P. C. B. connection diagram is viewed from the foil side.

* SX-P920 ONLY
※ SX-P720 ONLY

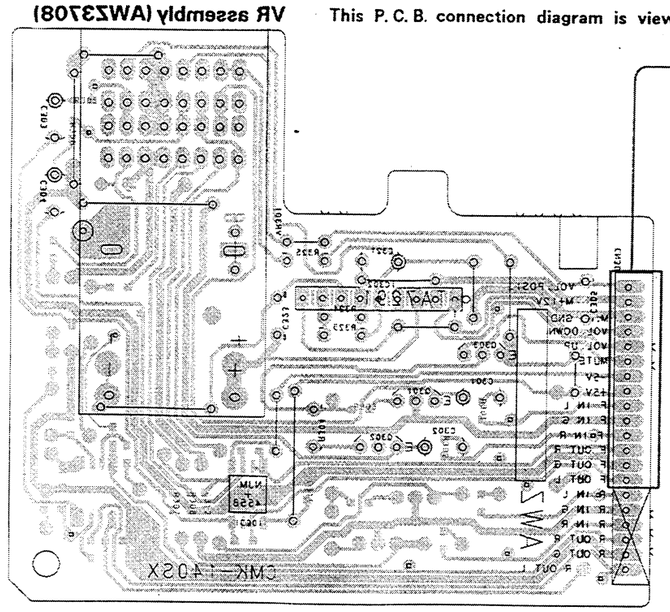

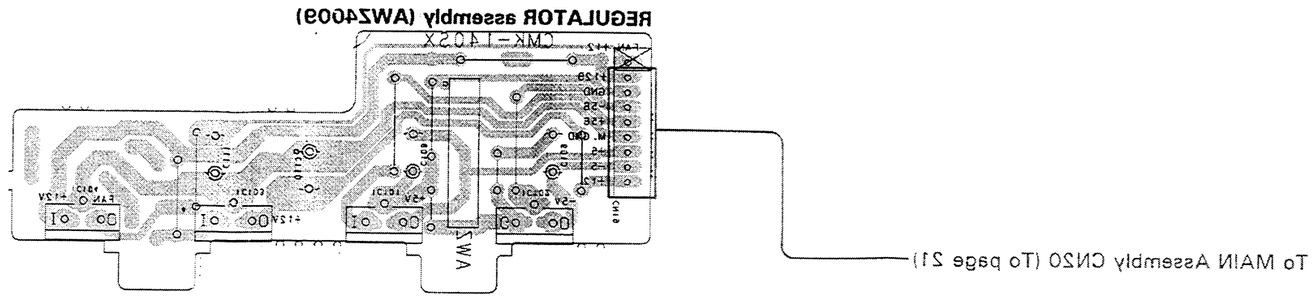

www.manualscenter.com

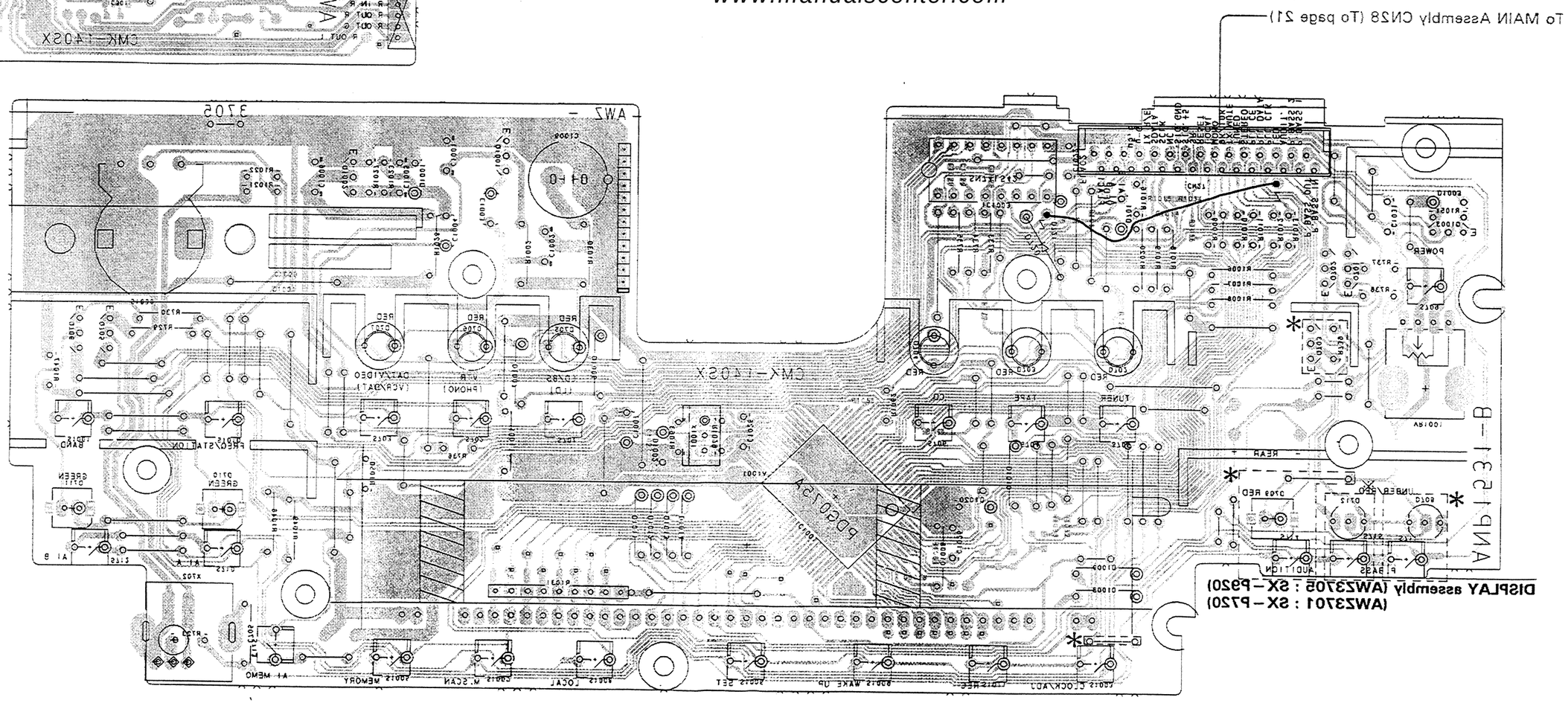

SX-P920, SX-P720

NOTE

1. This P.C.B connection diagram is viewed from the parts mounted side.
2. The parts which have been mounted on the board can be replaced with those shown with the corresponding wiring symbols listed in the following Table.

P.C.B. pattern diagram indication	Corresponding part symbol	Part Name
Q504	Q	Transistor
Q215	Q	Radiator type transistor
D203	D	Diode
R237	R	Resistor
C513	C	Capacitor (Polarity)
C518	C	Capacitor (Non-polarity)

Others

P.C.B. pattern diagram indication	Part Name
IC	IC
S	Switch
RY	Relay
L	Coil
F	Filter
VR	Variable resistor or Semifixed resistor

3. The capacitor terminal marked with ⊖ (double circles) shows negative terminal.
4. The diode terminal marked with ⊖ (double circles) shows cathode side.
5. The transistor terminal to which E is affixed shows the emitter.

This P. C. B connection diagram is viewed from the parts mounted side.

✱ SX−P920 ONLY
※ SX−P720 ONLY

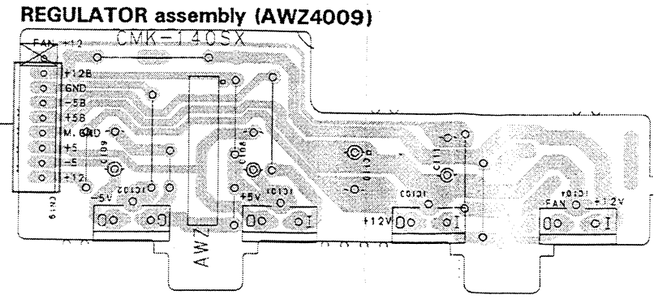

To MAIN Assembly CN20 (To page 21)

To MAIN Assembly CN29 (To page 21)

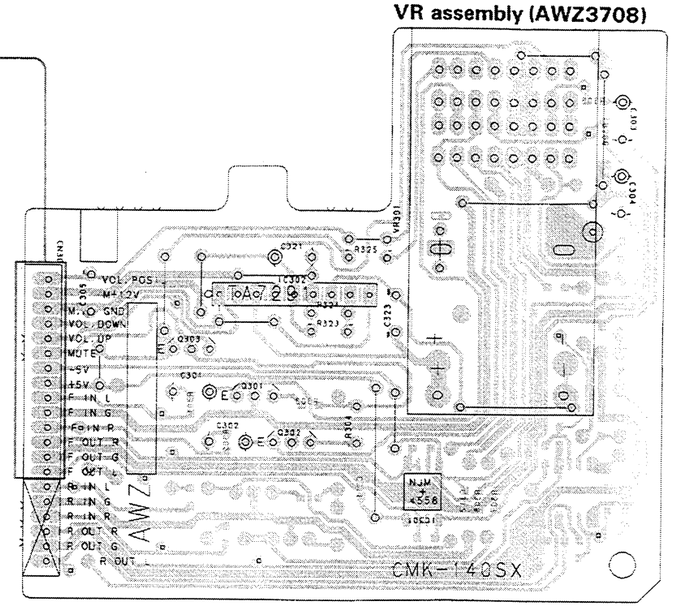

To MAIN Assembly CN28 (To page 21)

www.manualscenter.com

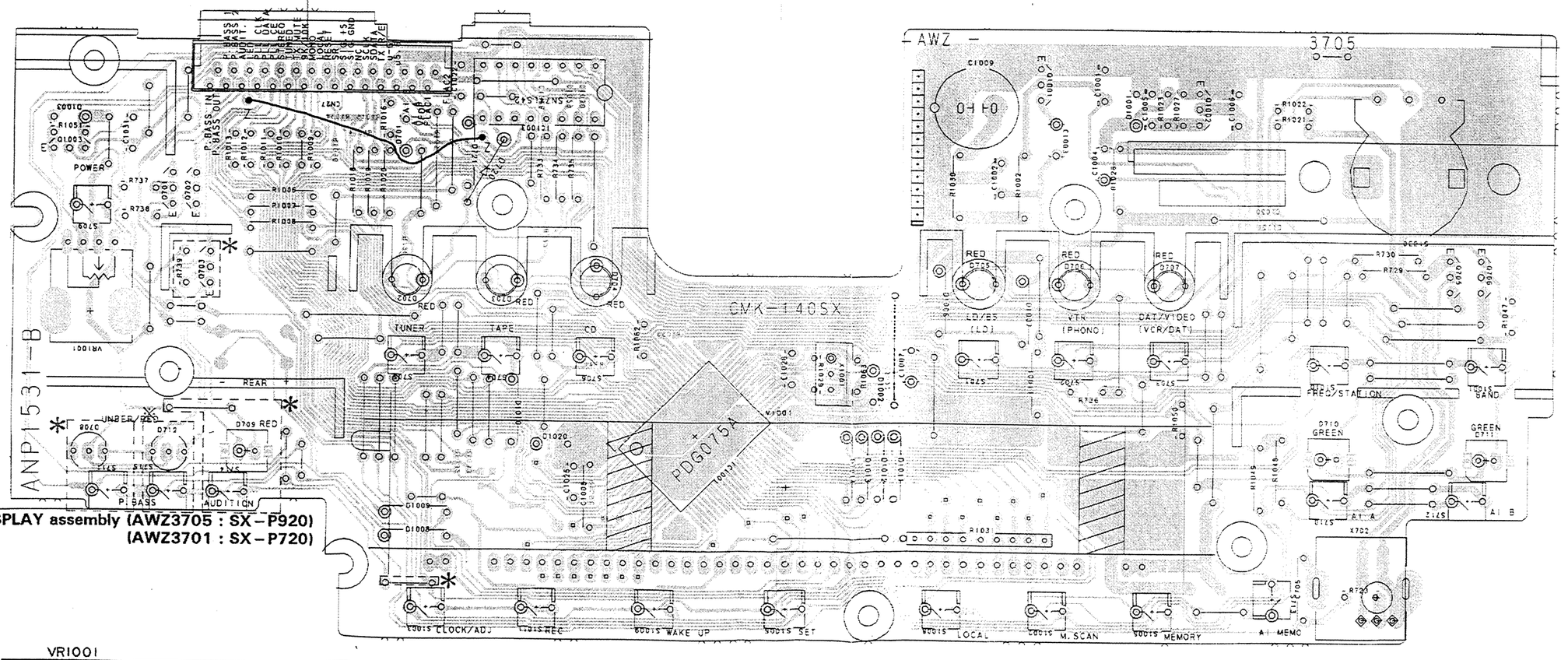

www.manualscenter.com

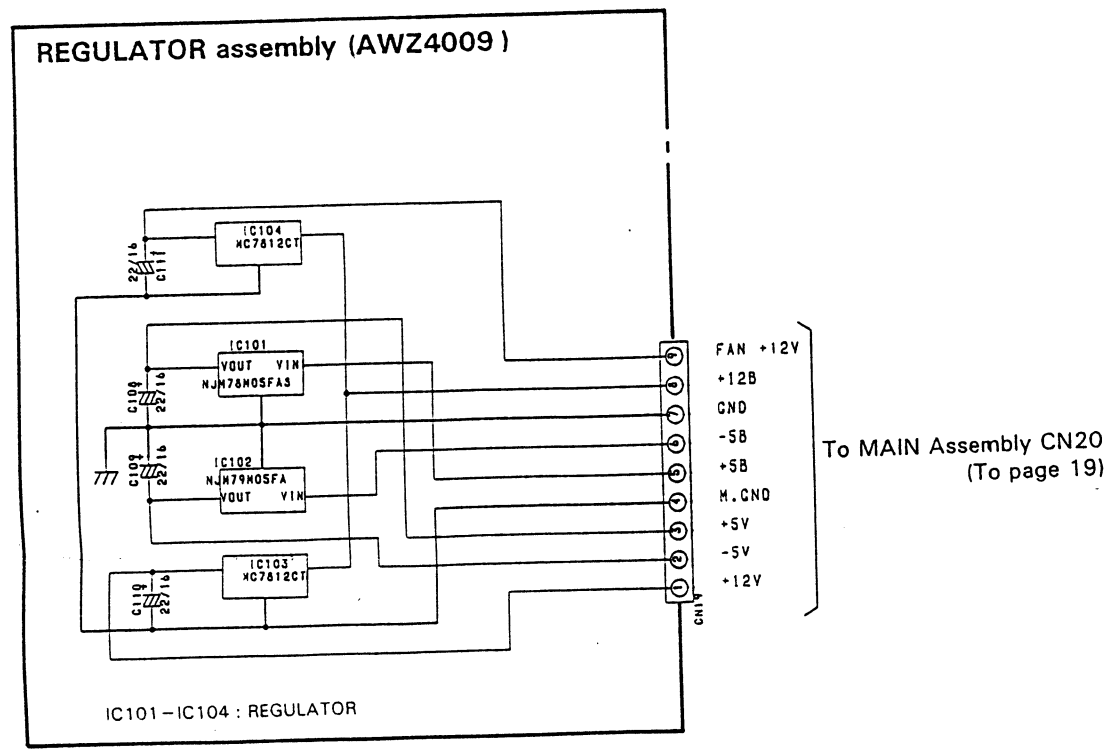

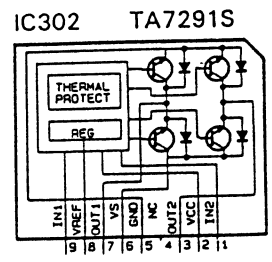

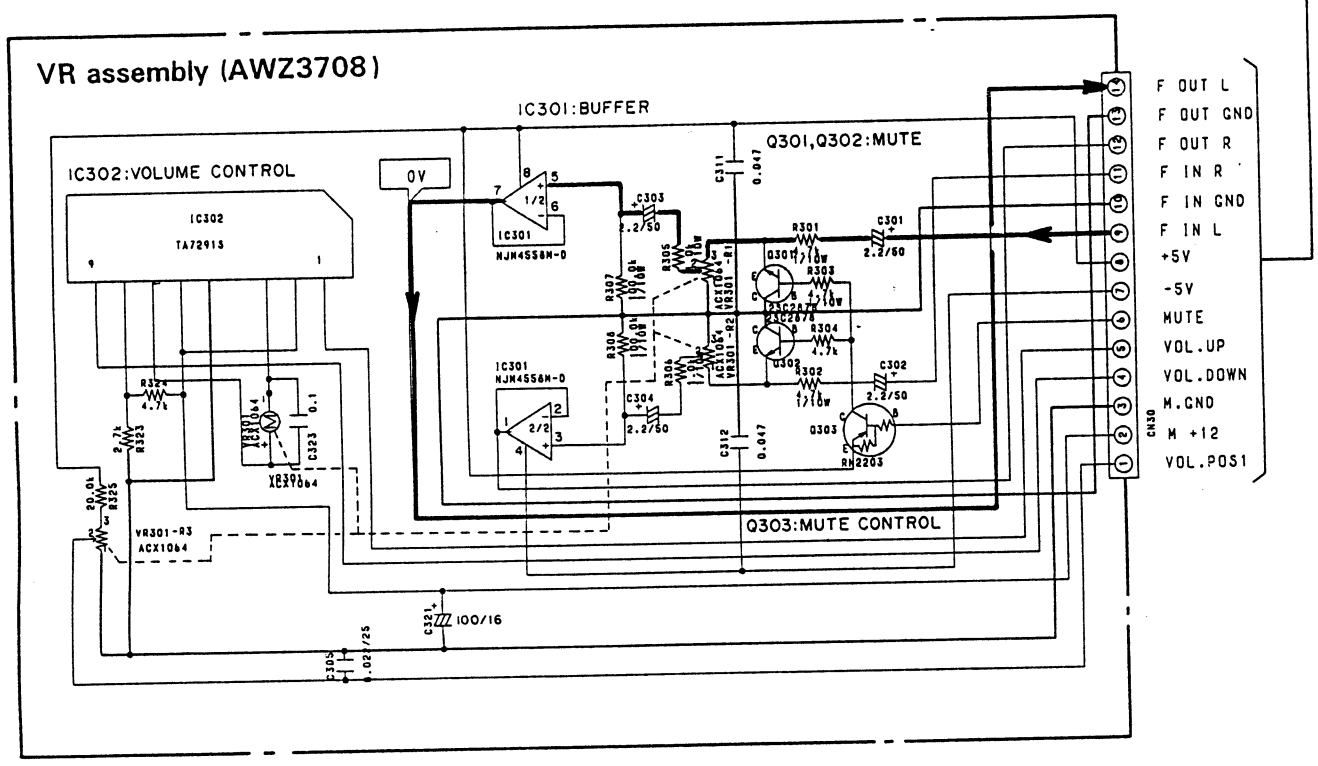

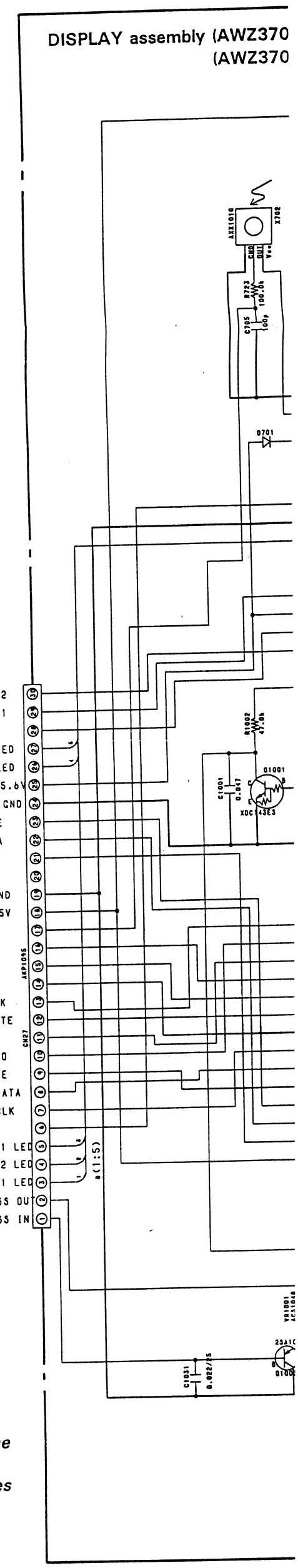

NOTE :
The VR assemblies of SX – P920 and SX – P720 types are the same.
The REGULATOR assemblies of SX – P920 and SX – P720 types are the same.

www.manualscenter.com

(WZ3705 : SX-P920)
(WZ3701 : SX-P720)

IC1003 Truth table

FUNCTION	A	B	C
TUNER	H	H	H
TAPE	L	H	H
CD	H	L	H
LD	L	L	L
PHONO	H	L	L
VCR/DAT	L	H	L

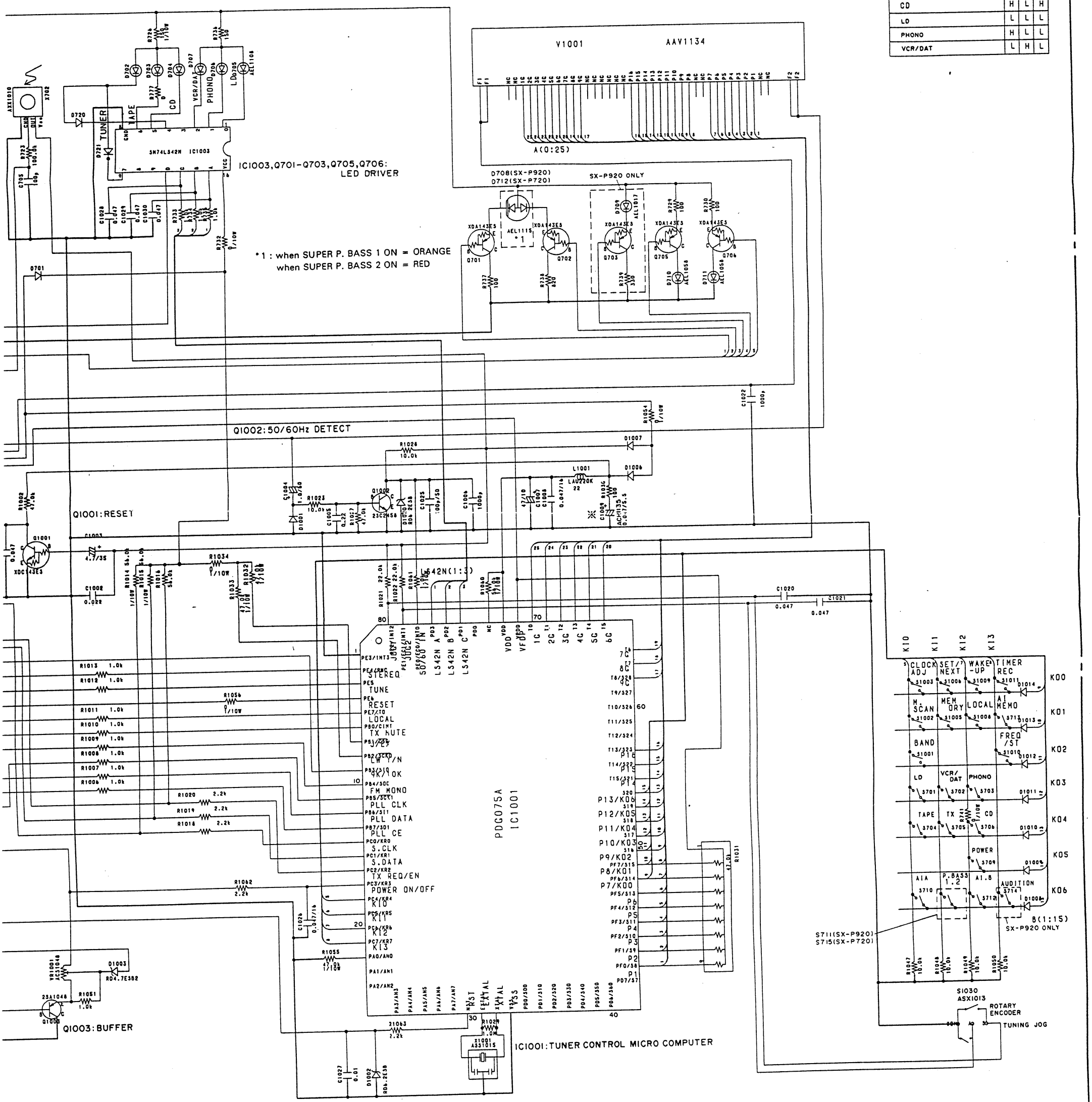

4. PCB PARTS LIST

NOTES:

- *Part without part number cannot be supplied.*
- *Parts marked by "◉" are not always kept in stock. Their delivery time may be longer than usual or they may be unavailable.*
- *The ⚠ mark found on some component parts indicates the importance of the safety factor of the part. Therefore, when replacing, be sure to use parts of identical designation.*
- *When ordering resistors, first convert resistance values into code form as shown in the following examples.*

Ex. 1 When there are 2 effective digits (any digit apart from 0), such as 560 ohm and 47k ohm (tolerance is shown by J = 5%, and K = 10%).

560Ω	*56 × 10¹*	*561*	*RD1/8PM 5 6 1 J*
47kΩ	*47 × 10³*	*473*	*RD1/4PS 4 7 3 J*
0.5Ω	*0R5*		*RN2H 0 R 5 K*
1Ω	*010*		*RS1P 0 1 0 K*

Ex. 2 When there are 3 effective digits (such as in high precision metal film resistors).

5.62kΩ	*562 × 10¹*	*5621*	*RN1/4SR 5 6 2 1 F*

4.1 SX-P920/HE

Mark	No.	Description	Parts No.
LIST OF ASSEMBLIES			
		TUNER ASSEMBLY	AWE1226
◉		MAIN ASSEMBLY	AWZ3719
◉		SUB. POWER ASSEMBLY	AWZ3727
◉		FR. AMP ASSEMBLY	AWZ3734
		MIC ASSEMBLY	
		HEAD. P ASSEMBLY	
		CONNECT ASSEMBLY	
◉		DISPLAY ASSEMBLY	AWZ3705
◉		VR ASSEMBLY	AWZ3708
◉		REGULATOR ASSEMBLY	AWZ4009
TUNER ASSEMBLY (AWE1226)			
SEMICONDUCTORS			
	IC901	PLL IC	LM7001
	IC902	AM/FM IC	LA1265S
	IC903	MPX IC	AN7470P
	Q901	N-FET	2SK246
	Q902	TRANSISTOR	2SC1740SLN
	Q903, 904	TRANSISTOR	RN1203
	Q905-907	TRANSISTOR	RN2201
	Q908	TRANSISTOR	RN1203
	Q909	TRANSISTOR	2SC2668
	Q910-913	TRANSISTOR	2SC2458
	Q914	TRANSISTOR	2SA1048
	D901	DIODE	1SV156
	D902	DIODE	HSS104-02
	D903, 904	DIODE	1SS85
	D905-912	DIODE	HSS104-02
COILS			
	F903	CERAMIC FILTER	ATF-119
	F904	CERAMIC FILTER	ATF1042
	F905	CERAMIC FILTER	ATF-107
	F906	FILTER	ATF1088
	L901, 903	AXIAL INDUCTOR	LAU2R2M
	L904	AXIAL INDUCTOR	LAU010M
	L905	AXIAL INDUCTOR	LAU2R2M
	L907	COIL	ATE-079
	L908	AXIAL INDUCTOR	LAU2R2M
CAPACITORS			
	C901	ELECTR. CAPACITOR	CEAS330M16
	C902	CERAMIC CAPACITOR	CKDYF102Z50
	C903	CERAMIC CAPACITOR	CKPUYB101K50
	C904	CERAMIC CAPACITOR	CKPUYB102K50
	C905	AUDIO FILM CAPACITOR	CFTXA103J50
	C906	AUDIO FILM CAPACITOR	CFTXA224J50
	C907	CERAMIC CAPACITOR	CKPUYB102K50
	C910	CERAMIC CAPACITOR	CKPUYB101K50
	C911	AXIAL CERAMIC CAPACITOR	CKPUYF103Z25
	C912	CERAMIC CAPACITOR	CCDCH150J50
	C913	CERAMIC CAPACITOR	CKDYF223Z50
	C914	CERAMIC CAPACITOR	CCDCH150J50
	C915	CERAMIC CAPACITOR	CKDYF223Z50
	C916	AXIAL CERAMIC CAPACITOR	CKPUYF103Z25
	C919, 922	CERAMIC CAPACITOR	CKDYF223Z50
	C923	AXIAL CERAMIC CAPACITOR	CKPUYF223Z25
	C924	ELECTR. CAPACITOR	CEAS470M10
	C925	AXIAL CERAMIC CAPACITOR	CKPUYF103Z25
	C926	ELECTR. CAPACITOR	CEAS330M16
	C927	CERAMIC CAPACITOR	CCDSL470J50
	C928	ELECTR. CAPACITOR	CEAS470M10
	C929	AXIAL CERAMIC CAPACITOR	CKPUYF103Z25
	C930	ELECTR. CAPACITOR	CEAS330M16
	C931	AXIAL CERAMIC CAPACITOR	CKPUYF223Z25
	C932-935	CERAMIC CAPACITOR	CKDYF223Z50
	C936	ELECTR. CAPACITOR	CEAS4R7M50
	C937	CERAMIC CAPACITOR	CKDYF223Z50
	C938	ELECTR. CAPACITOR	CEAS010M50
	C939	CERAMIC CAPACITOR	CCDSL271J50
	C940	CERAMIC CAPACITOR	CKDYB222K50
	C941	CERAMIC CAPACITOR	CKDYF473Z50
	C942	ELECTR. CAPACITOR	CEAS2R2M50
	C943	ELECTR. CAPACITOR	CEAS470M10
	C944	ELECTR. CAPACITOR	CEAS0R1M50
	C945	ELECTR. CAPACITOR	CEANP2R2M50
	C946	ELECTR. CAPACITOR	CEAS470M25
	C947	CERAMIC CAPACITOR	CKDYF473Z50
	C948	CAPACITOR (470p)	ACE1039
	C949	ELECTROLYTIC CAPACIT	CEAS1R5M50
	C950	ELECTR. CAPACITOR	CEAS3R3M50
	C951	ELECTR. CAPACITOR	CEAS470M10
	C952	CERAMIC CAPACITOR	CKDYB122K50
	C953	CERAMIC CAPACITOR	CKDYB122K50
	C954	ELECTR. CAPACITOR	CEAS0R1M50
	C955	ELECTR. CAPACITOR	CEASR22M50
	C956	CERAMIC CAPACITOR	CKDYB122K50
	C957, 958	ELECTR. CAPACITOR	CEAS2R2M50
	C959	AXIAL CERAMIC CAPACITOR	CKPUYF223Z25
	C960	ELECTR. CAPACITOR	CEAS0R1M50
	C961, 962	CERAMIC CAPACITOR	CKDYB272K50
	C963	ELECTR. CAPACITOR	CEAS2R2M50
	C964	CERAMIC CAPACITOR	CKPUYB101K50
	C965	CERAMIC CAPACITOR	CKPUYB102K50
	C968	CERAMIC CAPACITOR	CCDSL101J50
RESISTORS			
	VR901	VR (10k)	ACP1043
	VR902	VR (22k)	ACP1044
	VR903	VR (4.7k)	ACP1042
		Other resistors	RD1/8PM□□□J
OTHERS			
	X901	CRYSTAL RESONATOR (7.2MHz)	ASS1042
	X902	CERAMIC RESONATOR (450kHz)	ATF1027
		ANTENNA TERMINAL 4-P	AKA1010
		AM RF TUNING BLOCK	AXX1012
		AM RF TUNING BLOCK	AXX1013
		2 Serial F. E. MODULE ASSEMBLY	AXQ1002

NOTE :
The 2 serial F. E. module assembly (AXQ1002) will be replaced upon periodical servicing. Therefore, individual parts in the assembly are not specified for service.

Mark	No.	Description	Parts No.
◉ **MAIN ASSEMBLY (AWZ3719)**			
SEMICONDUCTORS			
	IC1001	OP-AMP IC	NJM4558M-D
	IC401	E-VR IC	M5222L
	IC402-405	OP-AMP IC	NJM4558M-D
	IC51	REGULATOR IC	NJM78M56FAS
	IC701	SYSTEM CONTROL MICROCOMPUTER	PD5170B
	Q1001	TRANSISTOR	XDC143ES
	Q1002	TRANSISTOR	2SC2458
	Q151	TRANSISTOR	2SA1048
	Q152	TRANSISTOR	2SC2458
	Q153-155	TRANSISTOR	2SC2458
	Q158	TRANSISTOR	2SC2458
	Q161	TRANSISTOR	XDC143ES
	Q401, 405	TRANSISTOR	2SC2458
	Q51-54	TRANSISTOR	2SC2458
	D1003-1006	DIODE	1SS252
	D101	DIODE	D3SBA20
	D102-107	DIODE	1SR139-400
	D151	DIODE	1SR139-400
	D152, 153	DIODE	1SS252
	D154, 155	ZENER DIODE	RD11ESB
	D3001	DIODE	1SS252
	D401, 402	DIODE	1SS252
	D405	ZENER DIODE	RD6.8ESB2
	D51	ZENER DIODE	RD10ESB2
	D52	ZENER DIODE	RD16ESB1
	D53	ZENER DIODE	RD6.2ESB
	D54	ZENER DIODE	RD16ESB1
	D55-58	DIODE	1SR139-400
	D59	ZENER DIODE	RD6.2ESB
	D60-64	DIODE	1SR139-400
	D701	DIODE	1SS252
	D702, 709	ZENER DIODE	RD6.2ESB2
RELAY			
	RY151	RELAY	ASR1035
COILS			
	L251, 252	COIL	ATH-133
	L701	AXIAL INDUCTOR	LAU220K
CAPACITORS			
	C103, 104	ELECTROLYTIC CAPACIT (5600p/50V)	ACH1145
	C105, 106	ELECTR. CAPACITOR	CEAS102M16
	C111, 112	CERAMIC CAPACITOR	CKCYF103Z50
	C113	ELECTR. CAPACITOR	CEAS222M25
	C151	ELECTR. CAPACITOR	CEAS330M25
	C152	ELECTR. CAPACITOR	CEAS221M16
	C153	ELECTR. CAPACITOR	CEAS100M50
	C154	ELECTR. CAPACITOR	CEAS221M16
	C2027	MYLAR FILM CAPACITOR	CQMA104K250
	C251		
	C300		
	C401,		
	C403		
	C404		
	C405		
	C408		
	C409		
	C410		
	C411		
	C412		
	C413		
	C414		
	C51		
	C52		
	C54		
	C55		
	C57		
	C701		
	C702		
	C703		
	C704		
	C705-C901,		
RESISTOR			
	R1007		
	R101,		
	R1011		
	R1012		
	R1013		
	R151		
	R158		
	R163,		
	R251,		
	R52		
	R53		
	R54		

www.manualscenter.com

No.	Description	Parts No.
936	ELECTR. CAPACITOR	CEAS4R7M50
937	CERAMIC CAPACITOR	CKDYF223Z50
938	ELECTR. CAPACITOR	CEAS010M50
939	CERAMIC CAPACITOR	CCDSL271J50
940	CERAMIC CAPACITOR	CKDYB222K50
941	CERAMIC CAPACITOR	CKDYF473Z50
942	ELECTR. CAPACITOR	CEAS2R2M50
943	ELECTR. CAPACITOR	CEAS470M10
944	ELECTR. CAPACITOR	CEAS0R1M50
945	ELECTR. CAPACITOR	CEANP2R2M50
946	ELECTR. CAPACITOR	CEAS470M25
947	CERAMIC CAPACITOR	CKDYF473Z50
948	CAPACITOR (470p)	ACE1039
949	ELECTROLYTIC CAPACIT	CEAS1R5M50
950	ELECTR. CAPACITOR	CEAS3R3M50
951	ELECTR. CAPACITOR	CEAS470M10
952	CERAMIC CAPACITOR	CKDYB122K50
953	CERAMIC CAPACITOR	CKDYB122K50
954	ELECTR. CAPACITOR	CEAS0R1M50
955	ELECTR. CAPACITOR	CEASR22M50
956	CERAMIC CAPACITOR	CKDYB122K50
957, 958	ELECTR. CAPACITOR	CEAS2R2M50
959	AXIAL CERAMIC CAPACITOR	CKPUYF223Z25
960	ELECTR. CAPACITOR	CEAS0R1M50
961, 962	CERAMIC CAPACITOR	CKDYB272K50
963	ELECTR. CAPACITOR	CEAS2R2M50
964	CERAMIC CAPACITOR	CKPUYB101K50
965	CERAMIC CAPacitor	CKPUYB102K50
968	CERAMIC CAPACITOR	CCDSL101J50
ORS		
R901	VR (10k)	ACP1043
R902	VR (22k)	ACP1044
R903	VR (4.7k)	ACP1042
	Other resistors	RD1/8PM□□□J
S		
01	CRYSTAL RESONATOR (7.2MHz)	ASS1042
02	CERAMIC RESONATOR (450kHz)	ATF1027
	ANTENNA TERMINAL 4-P	AKA1010
	AM RF TUNING BLOCK	AXX1012
	AM RF TUNING BLOCK	AXX1013
	2 Serial F. E. MODULE ASSEMBLY	AXQ1002

erial F. E. module assembly (AXQ1002) will be upon periodical servicing. Therefore, individual the assembly are not specified for service.

Mark	No.	Description	Parts No.
◉ MAIN ASSEMBLY (AWZ3719)			
SEMICONDUCTORS			
	IC1001	OP-AMP IC	NJM4558M-D
	IC401	E-VR IC	M5222L
	IC402-405	OP-AMP IC	NJM4558M-D
	IC51	REGULATOR IC	NJM78M56FAS
	IC701	SYSTEM CONTROL MICROCOMPUTER	PD5170B
	Q1001	TRANSISTOR	XDC143ES
	Q1002	TRANSISTOR	2SC2458
	Q151	TRANSISTOR	2SA1048
	Q152	TRANSISTOR	2SC2458
	Q153-155	TRANSISTOR	2SC2458
	Q158	TRANSISTOR	2SC2458
	Q161	TRANSISTOR	XDC143ES
	Q401, 405	TRANSISTOR	2SC2458
	Q51-54	TRANSISTOR	2SC2458
	D1003-1006	DIODE	1SS252
	D101	DIODE	D3SBA20
	D102-107	DIODE	1SR139-400
	D151	DIODE	1SR139-400
	D152, 153	DIODE	1SS252
	D154, 155	ZENER DIODE	RD11ESB
	D3001	DIODE	1SS252
	D401, 402	DIODE	1SS252
	D405	ZENER DIODE	RD6.8ESB2
	D51	ZENER DIODE	RD10ESB2
	D52	ZENER DIODE	RD16ESB1
	D53	ZENER DIODE	RD6.2ESB
	D54	ZENER DIODE	RD16ESB1
	D55-58	DIODE	1SR139-400
	D59	ZENER DIODE	RD6.2ESB
	D60-64	DIODE	1SR139-400
	D701	DIODE	1SS252
	D702, 709	ZENER DIODE	RD6.2ESB2
RELAY			
	RY151	RELAY	ASR1035
COILS			
	L251, 252	COIL	ATH-133
	L701	AXIAL INDUCTOR	LAU220K
CAPACITORS			
	C103, 104	ELECTROLYTIC CAPACIT (5600p/50V)	ACH1145
	C105, 106	ELECTR. CAPACITOR	CEAS102M16
	C111, 112	CERAMIC CAPACITOR	CKCYF103Z50
	C113	ELECTR. CAPACITOR	CEAS222M25
	C151	ELECTR. CAPACITOR	CEAS330M25
	C152	ELECTR. CAPACITOR	CEAS221M16
	C153	ELECTR. CAPACITOR	CEAS100M50
	C154	ELECTR. CAPACITOR	CEAS221M16
	C2027	MYLAR FILM CAPACITOR	CQMA104K250

Mark	No.	Description	Parts No.
	C251	ELECTROLYTIC CAPACIT	CEANP4R7M100
	C3001	ELECTR. CAPACITOR	CEAS471M10
	C401, 402	ELECTR. CAPACITOR	CEAS010M50
	C403	CERAMIC CAPACITOR	CKSQYF104Z50
	C404	CERAMIC CAPACITOR	CKSQYB333K50
	C405	ELECTR. CAPACITOR	CEAS2R2M50
	C408	ELECTR. CAPACITOR	CEAS010M50
	C409	CERAMIC CAPACITOR	CKSQYB333K50
	C410	ELECTR. CAPACITOR	CEAS2R2M50
	C411	ELECTR. CAPACITOR	CEASR68M50
	C412	ELECTR. CAPACITOR	CEAS2R2M50
	C413	CERAMIC CAPACITOR	CKSQYB183K50
	C414	CERAMIC CAPACITOR	CKSQYF683Z50
	C51	ELECTROLYTIC CAPACIT	CEAS222M25
	C52	ELECTR. CAPACITOR	CEAS221M50
	C54	ELECTROLYTIC CAPACIT	CEHAQ470M16
	C55	ELECTROLYTIC CAPACIT	CEHAQ470M50
	C57	ELECTROLYTIC CAPACIT	CEHAQ470M16
	C701	CERAMIC CAPACITOR	CKSQYF473Z50
	C702	ELECTR. CAPACITOR	CEAS470M16
	C703	CERAMIC CAPACITOR	CKSQYF473Z50
	C704	CERAMIC CAPACITOR	CKDYF473Z50
	C705-708	CERAMIC CAPACITOR	CKSQYF473Z50
	C901, 902	CERAMIC CAPACITOR	CKSQYF104Z50
RESISTORS			
	R1007	METAL FILM RESISTER	RN1/4PC1001F
	R101, 102	METAL OXIDE RESISTOR	RS2LMFR22J
	R1011	METAL FILM RESISTER	RN1/4PC5601F
	R1012	METAL FILM RESISTER	RN1/4PC6801F
	R1013	METAL FILM RESISTER	RN1/4PC2702F
	R151	CARBON FILM RESISTOR	RD1/2PM182J
	R158	CARBON FILM RESISTOR	RD1/8PM392J
	R163, 164	METAL OXIDE RESISTOR	RS2LMF331J
	R251, 252	CARBON FILM RESISTOR	RD1/4PMFL100J
	R52	CARBON FILM RESISTOR	RD1/8PM562J
	R53	CARBON FILM RESISTOR	RD1/8PM102J
	R54	METAL OXIDE RESISTOR	RS3LMF821J
		Other resistors	RS1/10S□□□J

Mark	No.	Description	Parts No.
OTHERS			
		SPEAKER TERMINAL 4-P	AKE-109
	CN	PIN JACK 2P (REAR SPEAKERS)	AKB1185
	CN1	SOCKET (15P)	AKP1090
	CN15	CONNECTOR (4P)	KPC4
	CN2	SOCKET (15P)	AKP1092
	CN28	30P SOCKET	AKP1094
	TH1001	THERMISTOR	NTH2218F
	X701	CERAMIC RESONATOR (4MHz)	ASS1025
◉ SUB. POWER ASSEMBLY (AWZ3727)			
RELAY			
	RY51	RELAY	ASR1027
COIL & TRANSFORMER			
	L51	FILTER	ATF-151
	T51	POWER TRANSFORMER	ATT1174
CAPACITORS			
	C58, 59	CKA (0.01/AC400V)	ACG1003
RESISTOR			
	R60	METAL OXIDE RESISTOR	RS2LMF680J
◉ FR. AMP ASSEMBLY (AWZ3734)			
SEMICONDUCTOR			
	IC201	AUDIO IC	STK4180-2G
CAPACITORS			
	C201, 202	ELECTR. CAPACITOR	CEASR33M50
	C203, 204	CERAMIC CAPACITOR	CKCYB471K50
	C205-208	ELECTR. CAPACITOR	CEAS101M50
	C209, 210	ELECTR. CAPACITOR	CEAS100M50
	C211-214	CERAMIC CAPACITOR	CKCYF473Z50
RESISTORS			
	R201, 202	CARBON FILM RESISTOR	RD1/8PM102J
	R203, 204	CARBON FILM RESISTOR	RD1/8PM563J
	R209, 210	CARBON FILM RESISTOR	RD1/4PMFL101J
		Other resistors	RD1/4PM□□□J

Mark No.	Description	Parts No.
MIC ASSEMBLY		
SEMICONDUCTOR		
IC501	OP-AMP IC	NJM4558M-D
CAPACITORS		
C501	CERAMIC CAPACITOR	CKSQYB681K50
C502	ELECTR. CAPACITOR	CEJA010M50
C503	CERAMIC CAPACITOR	CKSQYB471K50
C504, 505	ELECTROLYTIC CAPACIT	CEJA100M25
C506, 507	CERAMIC CAPACITOR	CKSQYF473Z50
RESISTORS		
VR501	VARIABLE RESISTOR (10k)	ACS1074
	Other resistors	RS1/10S□□□J
OTHERS		
	JACK (MIC)	AKN1009
HEAD. P ASSEMBLY		
RESISTORS		
R557, 558	METAL OXIDE RESISTOR	RS2LMF331J
OTHERS		
CN551	JACK (HEAD PHONE)	AKN1028
CONNECT ASSEMBLY		
SEMICONDUCTORS		
IC104	IC PROTECTOR	ICP-N75
IC105, 106	IC PROTECTOR	ICP-N50
IC107-109	IC PROTECTOR	ICP-N75
◉ DISPLAY ASSEMBLY (AWZ3705)		
SEMICONDUCTORS		
IC1001	CONTROL MICROCOMPUTER	PDG075A
IC1003	LOGIC IC	SN74LS42NP
Q1001	TRANSISTOR	XDC143ES
Q1002	TRANSISTOR	2SC2458
Q1003	TRANSISTOR	2SA1048
Q701-703	TRANSISTOR	XDA143ES
Q705, 706	TRANSISTOR	XDA143ES
D1001	DIODE	1SS252
D1002	ZENER DIODE	RD6.2ESB
D1003	ZENER DIODE	RD4.7ESB2
D1006-1014	DIODE	1SS252
D1020	ZENER DIODE	RD6.2ESB
D701	DIODE	1SS252
D702-707	LED (RED)	AEL1108
D708	LED(RED, AMBER)	AEL1115
D709	LED (RED)	AEL1017
D710, 711	LED (LIGHT GREEN)	AEL1058
D720, 721	DIODE	1SS252
SWITCHES		
S1001-1003	SWITCH (BAND, M. SCAN, CLOCK ADJ.)	ASG1029
S1005, 1006	SWITCH (MEMORY, SET)	ASG1029
S1008-1011	SWITCH (LOCAL, WAKE UP, FREQ/STATION, REC)	ASG1029
S1030	ROTARY ENCODER (TUNING JOG)	ASX1013
S701-706	SWITCH (LD, VCR/DAT, PHONO, TAPE, TUNER, CD)	ASG1029
S709-714	SWITCH (POWER STANDBY/ON, AI. A, SUPER P. BASS, AI. B, AI. MEMORY, AUDITION)	ASG1029
COIL		
L1001	AXIAL INDUCTOR	LAU220K
CAPACITORS		
C1001	CERAMIC CAPACITOR	CKDYF473Z50
C1002	CERAMIC CAPACITOR	CKDYF223Z50
C1003	ELECTR. CAPACITOR	CEAS4R7M50
C1004	ELECTR. CAPACITOR	CEAS010M50
C1005	AUDIO FILM CAPACITOR	CFTXA224J50
C1006	CERAMIC CAPACITOR	CKDYB102K50
C1007	ELECTR. CAPACITOR	CEJA470M10
C1008	AXIAL CERAMIC CAPACITOR	CKPUYF473Z16
C1009	CAPACITOR (0.047/5.5)	ACH1135
C1020, 1021	CERAMIC CAPACITOR	CKSQYF473Z50
C1022	CERAMIC CAPACITOR	CKPUYB102K50
C1025	CERAMIC CAPACITOR	CKPUYB101K50
C1026	AXIAL CERAMIC CAPACITOR	CKPUYF473Z16
C1027	CERAMIC CAPACITOR	CKSQYB103K50
C1028-1030	CERAMIC CAPACITOR	CKSQYF473Z50
C1031	AXIAL CERAMIC CAPACITOR	CKPUYF223Z25
C705	CERAMIC CAPACITOR	CKPUYB101K50
RESISTORS		
VR1001	VARIABLE (10k)	ACS1048
R1014, 1015	CHIP RESISTOR	RS1/10S563J
R1031	RESISTOR ARRAY	RA8473J
R1032, 1033	CHIP RESISTOR	RS1/10S473J

www.manualscenter.com

Mark No.	Description	Parts No.
R1034, 1054	CHIP RESISTOR	RS1/10S000J
R1055	CHIP RESISTOR	RS1/10S473J
R1056	CHIP RESISTOR	RS1/10S000J
R1060	CHIP RESISTOR	RS1/10S563J
R1061	CHIP RESISTOR	RS1/10S102J
R726	CHIP RESISTOR	RS1/10S151J
R732	CHIP RESISTOR	RS1/10S000J
R741, 777	CHIP RESISTOR	RS1/10S000J
	Other resistors	RD1/8PM□□□J

OTHERS

CN27	30P SOCKET	AKP1095
	REMOTE RECEIVER UNIT	AXX1010
V1001	FL TUBE	AAV1134
X1001	CRYSTAL RESONATOR (8MHz)	ASS1015

◉ VR ASSEMBLY (AWZ3708)

SEMICONDUCTORS

IC301	OP-AMP IC	NJM4558M-D
IC302	MECHANISM DRIVER IC	TA7291S
Q301, 302	TRANSISTOR	2SC2878
Q303	TRANSISTOR	RN2203

CAPACITORS

C301-304	ELECTR. CAPACITOR	CEAS2R2M50
C305	AXIAL CERAMIC CAPACITOR	CKPUYF223Z25
C311, 312	CERAMIC CAPACITOR	CKSQYF473Z50
C321	ELECTR. CAPACITOR	CEAS101M16
C323	CERAMIC CAPACITOR	CKDYX104M25

RESISTORS

VR301	VARIABLE RESISTOR (100k×2, 50k×1)	ACX1064
R301-303	CHIP RESISTOR	RS1/10S472J
R305, 306	CHIP RESISTOR	RS1/10S102J
R307, 308	CHIP RESISTOR	RS1/10S104J
	Other resistors	RD1/8PM□□□J

Mark No.	Description	Parts No.

◉ REGULATOR ASSEMBLY (AWZ4009)

SEMICONDUCTORS

IC101	REGULATOR IC	NJM78M05FAS
IC102	REGULATOR IC	NJM79M05FA
IC103, 104	REGULATOR IC	MC7812CT

CAPACITORS

C108	ELECTR. CAPACITOR	CEAS220M16
C109	ELECTROLYTIC CAPACIT	CEJA220M16
C110, 111	ELECTR. CAPACITOR	CEAS220M16

4.2 SX-P720/HE

LIST OF ASSEMBLIES

Mark	No.	Description	Parts No.
		TUNER ASSEMBLY	AWE1226
◉		MAIN ASSEMBLY	AWZ3714
◉		SUB. POWER ASSEMBLY	AWZ3722
◉		FR. AMP ASSEMBLY	AWZ3730
		HEAD. P ASSEMBLY	
		CONNECT ASSEMBLY	
◉		DISPLAY ASSEMBLY	AWZ3701
◉		VR ASSEMBLY	AWZ3708
◉		REGULATOR ASSEMBLY	AWZ4009

TUNER ASSEMBLY (AWE1226)

The TUNER assembly of SX-P720 is the same as that of SX-P920.
Refer to page 34.

◉ MAIN ASSEMBLY (AWZ3714)

SEMICONDUCTORS

Mark	No.	Description	Parts No.
	IC1001	OP-AMP IC	NJM4558M-D
	IC401	E-VR IC	M5222L
	IC402-405	OP-AMP IC	NJM4558M-D
	IC51	REGULATOR IC	NJM78M56FAS
	IC701	SYSTEM CONTROL MICROCOMPUTER	PD5170B
	Q1001	TRANSISTOR	XDC143ES
	Q1002	TRANSISTOR	2SC2458
	Q151	TRANSISTOR	2SA1048
	Q152-155	TRANSISTOR	2SC2458
	Q158	TRANSISTOR	2SC2458
	Q161	TRANSISTOR	XDC143ES
	Q401, 405	TRANSISTOR	2SC2458
	Q51-54	TRANSISTOR	2SC2458
	D1003-1006	DIODE	1SS252
	D101	DIODE	D3SBA20
	D102-107	DIODE	1SR139-400
	D151	DIODE	1SR139-400
	D152, 153	DIODE	1SS252
	D154, 155	ZENER DIODE	RD11ESB
	D3001	DIODE	1SS252
	D401, 402	DIODE	1SS252
	D405	ZENER DIODE	RD6.8ESB2
	D51	ZENER DIODE	RD10ESB2
	D52, 54	ZENER DIODE	RD16ESB1
	D60-64	DIODE	1SR139-400
	D701	DIODE	1SS252
	D702, 709	ZENER DIODE	RD6.2ESB2

Mark	No.	Description	Parts No.
	RELAY		
	RY151	RELAY	ASR1035
	COILS		
	L251, 252	COIL	ATH-133
	L701	AXIAL INDUCTOR	LAU220K
	CAPACITORS		
	C103, 104	ELECTROLYTIC CAPACIT (3300/50V)	ACH1017
	C105, 106	ELECTR. CAPACITOR	CEAS102M16
	C111, 112	CERAMIC CAPACITOR	CKCYF103Z50
	C113	ELECTR. CAPACITOR	CEAS222M25
	C151	ELECTR. CAPACITOR	CEAS330M25
	C152	ELECTR. CAPACITOR	CEAS221M16
	C153	ELECTR. CAPACITOR	CEAS100M50
	C154	ELECTR. CAPACITOR	CEAS221M16
	C2027	MYLAR FILM CAPACITOR	CQMA104K250
	C251	ELECTROLYTIC CAPACIT	CEANP4R7M100
	C3001	ELECTR. CAPACITOR	CEAS471M10
	C401, 402	ELECTR. CAPACITOR	CEAS010M50
	C403	CERAMIC CAPACITOR	CKSQYF104Z50
	C404	CERAMIC CAPACITOR	CKSQYB333K50
	C405	ELECTR. CAPACITOR	CEAS2R2M50
	C408	ELECTR. CAPACITOR	CEAS010M50
	C409	CERAMIC CAPACITOR	CKSQYB333K50
	C410	ELECTR. CAPACITOR	CEAS2R2M50
	C411	ELECTR. CAPACITOR	CEASR68M50
	C412	ELECTR. CAPACITOR	CEAS2R2M50
	C413	CERAMIC CAPACITOR	CKSQYB183K50
	C414	CERAMIC CAPACITOR	CKSQYF683Z50
	C51	ELECTROLYTIC CAPACIT	CEAS222M25
	C52	ELECTR. CAPACITOR	CEAS221M50
	C54	ELECTROLYTIC CAPACIT	CEHAQ470M16
	C55	ELECTROLYTIC CAPACIT	CEHAQ470M50
	C57	ELECTROLYTIC CAPACIT	CEHAQ470M16
	C701	CERAMIC CAPACITOR	CKSQYF473Z50
	C702	ELECTR. CAPACITOR	CEAS470M16
	C703	CERAMIC CAPACITOR	CKSQYF473Z50
	C704	CERAMIC CAPACITOR	CKDYF473Z50
	C705-708	CERAMIC CAPACITOR	CKSQYF473Z50
	C901, 902	CERAMIC CAPACITOR	CKSQYF104Z50
	RESISTORS		
	R1007	METAL FILM RESISTER	RN1/4PC1001F
	R101, 102	METAL OXIDE RESISTOR	RS2LMFR22J

www.manualscenter.com

Mark No.	Description	Parts No.
R1011	METAL FILM RESISTER	RN1/4PC5601F
R1012	METAL FILM RESISTER	RN1/4PC6801F
R1013	METAL FILM RESISTER	RN1/4PC2702F
R151	CARBON FILM RESISTOR	RD1/2PM182J
R158	CARBON FILM RESISTOR	RD1/8PM392J
R163	METAL OXIDE RESISTOR	RS2LMF221J
R164	METAL OXIDE RESISTOR	RS2LMF331J
R251, 252	CARBON FILM RESISTOR	RD1/4PMFL100J
R52	CARBON FILM RESISTOR	RD1/8PM562J
R53	CARBON FILM RESISTOR	RD1/8PM102J
R54	METAL OXIDE RESISTOR	RS3LMF821J
	Other resistors	RS1/10S□□□J
OTHERS		
	SPEAKER TERMINAL 4-P	AKE-109
CN	PIN JACK 2P (REAR SPEAKERS)	AKB1185
CN1	SOCKET (15P)	AKP1090
CN2	SOCKET (15P)	AKP1092
CN28	30P SOCKET	AKP1094
TH1001	THERMISTOR	NTH2218F
X701	CERAMIC RESONATOR (4MHz)	ASS1025

◉ SUB. POWER ASSEMBLY (AWZ3722)

SEMICONDUCTORS		
D53	ZENER DIODE	RD6.2ESB
D55-58	DIODE	1SR139-400
D59	ZENER DIODE	RD6.2ESB
RELAY		
RY51	RELAY	ASR1027
COIL & TRANSFORMER		
L51	FILTER	ATF-151
T51	POWER TRANSFORMER	ATT1174
CAPACITORS		
C58, 59	CKA (0.01/AC400V)	ACG1003
RESISTOR		
R60	METAL OXIDE RESISTOR	RS2LMF680J

◉ FR. AMP ASSEMBLY (AWZ3730)

SEMICONDUCTOR		
IC201	AUDIO IC	STK4160-2G
CAPACITORS		
C201, 202	ELECTROLYTIC CAPACIT	CEASR15M50
C203, 204	CERAMIC CAPACITOR	CKCYB471K50
C205-208	ELECTR. CAPACITOR	CEAS101M50
C209, 210	ELECTR. CAPACITOR	CEAS100M50
C211-214	CERAMIC CAPACITOR	CKCYF473Z50
RESISTORS		
R201, 202	CARBON FILM RESISTOR	RD1/8PM102J
R203, 204	CARBON FILM RESISTOR	RD1/8PM563J
R209, 210	CARBON FILM RESISTOR	RD1/4PMFL101J
	Other resistors	RD1/4PM□□□J

HEAD. P ASSEMBLY

The HEAD. P assembly of SX-P720 is the same as that of SX-P920.
Refer to page 37.

CONNECT ASSEMBLY

The CONNECT assembly of SX-P720 is the same as that of SX-P920.
Refer to page 37.

◉ DISPLAY ASSEMBLY (AWZ3701)

SEMICONDUCTORS		
IC1001	CONTROL MICROCOMPUTER	PDG075A
IC1003	LOGIC IC	SN74LS42NP
Q1001	TRANSISTOR	XDC143ES
Q1002	TRANSISTOR	2SC2458
Q1003	TRANSISTOR	2SA1048
Q701, 702	TRANSISTOR	XDA143ES
Q705, 706	TRANSISTOR	XDA143ES
D1001	DIODE	1SS252
D1002	ZENER DIODE	RD6.2ESB
D1003	ZENER DIODE	RD4.7ESB2
D1006-1014	DIODE	1SS252
D1020	ZENER DIODE	RD6.2ESB

Mark No.	Description	Parts No.
D701	DIODE	1SS252
D702-707	LED (RED)	AEL1108
D710, 711	LED (LIGHT GREEN)	AEL1058
D712	LED (RED, AMBER)	AEL1115
D720, 721	DIODE	1SS252
SWITCHES		
S1001-1003	SWITCH (BAND, M. SCAN, CLOCK ADJ.)	ASG1029
S1005, 1006	SWITCH (MEMORY, SET)	ASG1029
S1008-1011	SWITCH (LOCAL, WAKE UP, FREQ/STATION, REC)	ASG1029
S1030	ROTARY ENCODER (TUNING JOG)	ASX1013
S701-706	SWITCH (LD, VCR/DAT, PHONO, TAPE, TUNER, CD)	ASG1029
S709, 710	SWITCH (POWER STANDBY/ON, AI. A)	ASG1029
S712, 713	SWITCH (AI. B, AI, MEMORY)	ASG1029
S715	SWITCH (SUPER P. BASS)	ASG1029
COIL		
L1001	AXIAL INDUCTOR	LAU220K
CAPACITORS		
C1001	CERAMIC CAPACITOR	CKDYF473Z50
C1002	CERAMIC CAPACITOR	CKDYF223Z50
C1003	ELECTR. CAPACITOR	CEAS4R7M50
C1004	ELECTR. CAPACITOR	CEAS010M50
C1005	AUDIO FILM CAPACITOR	CFTXA224J50
C1006	CERAMIC CAPACITOR	CKDYB102K50
C1007	ELECTR. CAPACITOR	CEJA470M10
C1008	AXIAL CERAMIC CAPACITOR	CKPUYF473Z16
C1009	CAPACITOR (0.047/5.5)	ACH1135
C1020, 1021	CERAMIC CAPACITOR	CKSQYF473Z50
C1022	CERAMIC CAPACITOR	CKPUYB102K50
C1025	CERAMIC CAPACITOR	CKPUYB101K50
C1026	AXIAL CERAMIC CAPACITOR	CKPUYF473Z16
C1027	CERAMIC CAPACITOR	CKSQYB103K50
C1028-1030	CERAMIC CAPACITOR	CKSQYF473Z50
C1031	AXIAL CERAMIC CAPACITOR	CKPUYF223Z25
C705	CERAMIC CAPACITOR	CKPUYB101K50
RESISTORS		
VR1001	VARIABLE (10k)	ACS1048
R1014, 1015	CHIP RESISTOR	RS1/10S563J
R1031	RESISTOR ARRAY	RA8S473J
R1032, 1033	CHIP RESISTOR	RS1/10S473J
R1034, 1054	CHIP RESISTOR	RS1/10S000J
R1055	CHIP RESISTOR	RS1/10S473J
R1056	CHIP RESISTOR	RS1/10S000J
R1060	CHIP RESISTOR	RS1/10S563J
R1061	CHIP RESISTOR	RS1/10S102J
R726	CHIP RESISTOR	RS1/10S151J
R732, 741	CHIP RESISTOR	RS1/10S000J
R777	CHIP RESISTOR	RS1/10S000J
	Other resistors	RD1/8PM□□□J
OTHERS		
CN27	30P SOCKET	AKP1095
	REMOTE RECEIVER UNIT	AXX1010
V1001	FL TUBE	AAV1134
X1001	CRYSTAL RESONATOR (8MHz)	ASS1015

◉ VR ASSEMBLY (AWZ3708)

The VR assembly of SX-P720 is the same as that of SX-P920.
Refer to page 38.

◉ REGULATOR ASSEMBLY (AWZ4009)

The REGULATOR assembly of SX-P720 is the same as that of SX-P920.
Refer to page 38.

www.manualscenter.com

5. ADJUSTMENTS

5.1 ADJUSTMENT OF THE FM TUNER SECTION

- Set the mode selector to FM BAND.
- Connect the wiring as shown in Fig. 5−1.

Step No.	Adjustment title	FM SG (1kHz±75kHz dev.)		Reception frequency display	Adjustment location	Specifications
		Frequency (MHz)	Level (dBμV)			
1	Center adjustment	83	80	83.0MHz	L907	Adjust so that the DC voltage between the TP901 (Vref) and TP902 (T−meter) becomes 0V±50mV.
2	VCO adjustment	Non modulation	80	83.0MHz	VR903	Adjust so that the output of the TP905 (VCO) becomes 76kHz±0.5kHz.
3	TUNED IND. Lighting level	83 *1 (Stereo modulation)	18 (±3dB)	83.0MHz	VR902	Adjust so that the indicators of TUNED, STEREO IND. start to light up.

Note :
Perform steps 1 and 3 when the F. E. module assembly is replaced.
Confirm VCO (step 2) and adjust if improper.
*1 Stereo modulation : Main 1kHz L+R ±68.25Hz dev.
Pilot 19kHz ±6.75kHz dev.

5.2 ADJUSTMENT OF MW TUNER SECTION

- Set the mode selector to MW BAND.
- Connect the wiring as shown in Fig. 5−2.

Step No.	Adjustment title	AM SG (400Hz 30% Mod.)		Reception frequency display	Adjustment location	Specifications
		Frequency (kHz)	Level (dBμV/m)			
1	Tracking adjustment *4	603 *1	Feeble input	603kHz *1	AM RF Tuning block antenna coil	Adjust so that the DC voltage between the TP904 (S-meter) and GND becomes at maximum level.
		1395 *3		1395kHz *3	TC901	
2	IFT adjustment *4	603 *1		603kHz *1	F904	
3	TUNED IND. Lighting level	999 *2	55 (±5dB)	999kHz *2	VR901	Adjust so that the indicators of TUNED IND. start to light up.

Note 1 :
Frequencies indicated in the above table are for the area using 9kHz step (SD : 9kHz, HE, HB, HEWZI)
For the area using 10kHz step (SD : 10kHz, KUC), frequencies should be as follows :
**1 : 600kHz*
**2 : 1000kHz*
**3 : 1400kHz*
Note 2 :
*Adjustment marked with " *4 " is only for HEWZI.*

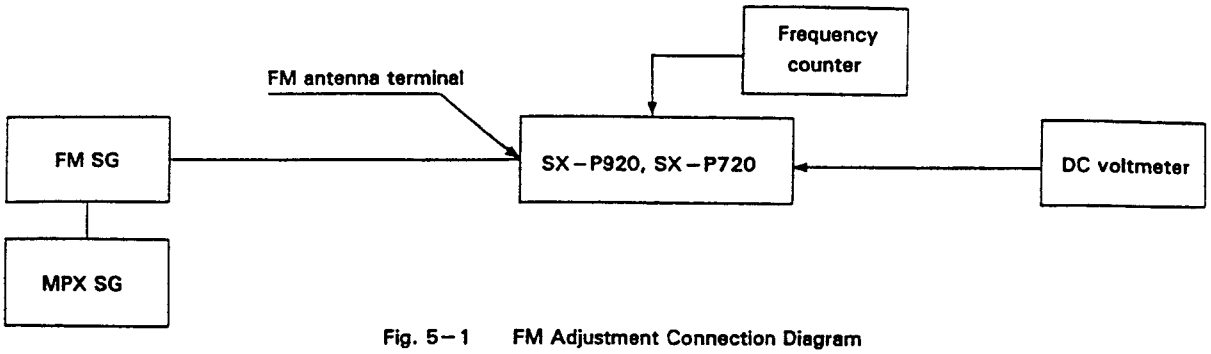

Fig. 5-1 FM Adjustment Connection Diagram

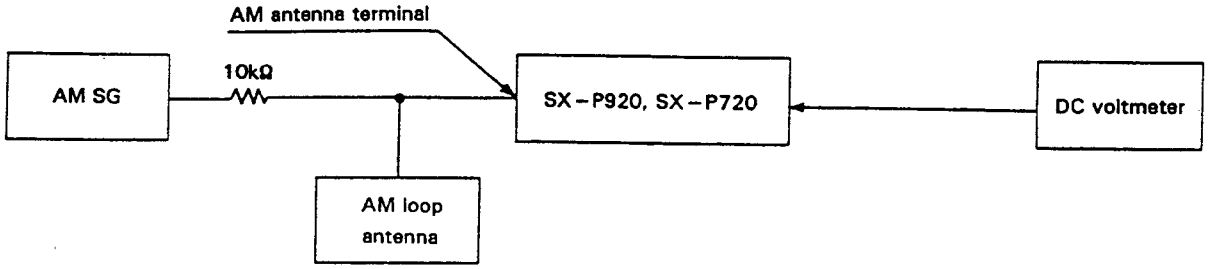

Fig. 5-2 MW Adjustment Connection Diagram

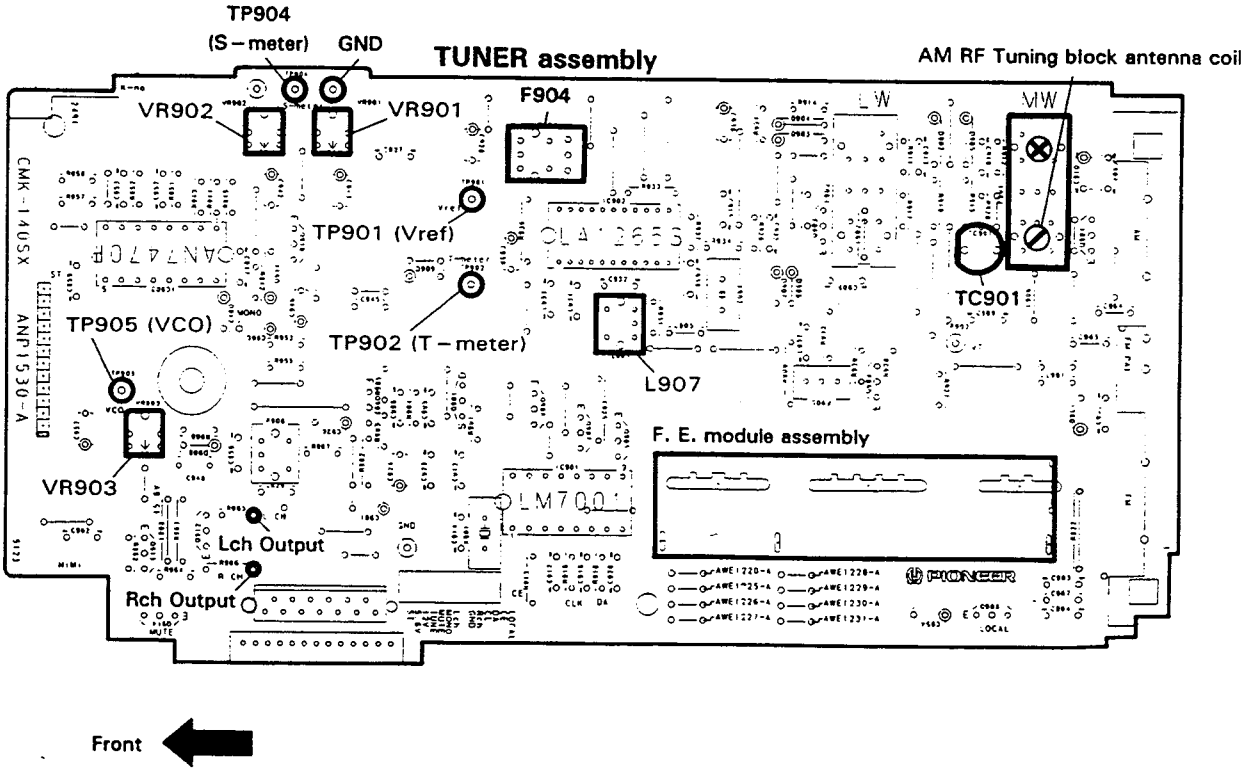

Fig. 5-3 Adjustment Points

www.manualscenter.com

6. IC INFORMATION

■ PDG075A (IC1001) : TUNER CONTROL MICRO-COMPUTER

● Pin Function

No.	Pin Name	I/O	Description	ACT
1	–	I	Switching Destination SX-P920, SX-P720 : L	
2	STEREO	I	$\overline{\text{STEREO}}$ Signal Input	L
3	TUNE	I	$\overline{\text{TUNED}}$ Signal Input	L
4	RESET	O	AMP MICRO-COMPUTER Reset Output	L
5	LOCAL	O	LOCAL Output	
6	TX MUTE	O	TUNER MUTE Output	
7	J/EX	I	Japan (H) / Export (L) Input	
8	LW Y/N	I	LW (H) / no LW (L) Input	
9	9k/10k	I	Switchig Channel Step Frequency 10 (H) / 9 (L) kHz Input	
10	FM MONO	O	FM MONO Output	
11	PLL CLK	O	PLL CLK Output (LM7001)	
12	PLL DATA	O	PLL DATA Output (LM7001)	
13	PLL CE	O	PLL CE Output (LM7001)	
14	S. CLK	I	System bus CLK Input	
15	S. DATA	I/O	System bus DATA Input/Output	
16	TX REQ/EN	O	System bus REQ Output	
		I	System bus ENABLE Input	
17	POWER ON/OFF	I	POWER IN ON (H) / OFF (L)	
18	KI0	I	Key Scan Input	
19	KI1	I	Key Scan Input	
20	KI2	I	Key Scan Input	
21	KI3	I	Key Scan Input	
22	–	I	Switching model type SX-P920, SX-P720 : L	
23	–	I	Not Used	
24	–	I	Not Used	
25	–	I	Not Used	

No.	Pin Name	I/O	Description	ACT
26	–	I	Not Used	
27	–	I	Not Used	
28	–	I	Not Used	
29	–	I	Not Used	
30	RST	I/O	RESET Input	L
31	EXTAL	I	Connected to ceramic oscillator (8MHz).	
32	XTAL	O		
33	Vss	GND	Connected to GND	
34	–	DP	Not Used	
35	–	DP	Not Used	
36	–	DP	Not Used	
37	–	DP	Not Used	
38	–	DP	Not Used	
39	–	DP	Not Used	
40	–	DP	Not Used	
41	–	DP	Not Used	
42	P1	DP	Segment Output	
43	P2	DP	Segment Output	
44	P3	DP	Segment Output	
45	P4	DP	Segment Output	
46	P5	DP	Segment Output	
47	P6	DP	Segment Output	
48	P7/KO0	DP	Segment Output/Key Scan Output	
49	P8/KO1	DP	Segment Output/Key Scan Output	
50	P9/KO2	DP	Segment Output/Key Scan Output	
51	P10/KO3	DP	Segment Output/Key Scan Output	
52	P11/KO4	DP	Segment Output/Key Scan Output	
53	P12/KO5	DP	Segment Output/Key Scan Output	
54	P13/KO6	DP	Segment Output/Key Scan Output	
55	P14	DP	Segment Output	

No.	Pin Name	I/O	Description	ACT
56	P15	DP	Segment Output	
57	P16	DP	Segment Output	
58	–	DP	Not Used	
59	–	DP	Not Used	
60	–	DP	Not Used	
61	–	DP	Not Used	
62	9G	DP	FL Grid Output (9G)	
63	8G	DP	FL Grid Output (8G)	
64	7G	DP	FL Grid Output (7G)	
65	6G	DP	FL Grid Output (6G)	
66	5G	DP	FL Grid Output (5G)	
67	4G	DP	FL Grid Output (4G)	
68	3G	DP	FL Grid Output (3G)	
69	2G	DP	FL Grid Output (2G)	
70	1G	DP	FL Grid Output (1G)	
71	VFDP	–	−30V FDP load power Input	
72	VDD	–	+5V Power Suplly Input	
73	–	–	Connected to Vdd.	
74	–	O	Not Used	
75	LS42N C	O	FUNCTION LED DRIVE IC (SN74LS42N) Control (C)	
76	LS42N B	O	FUNCTION LED DRIVE IC (SN74LS42N) Control (B)	
77	LS42N A	O	FUNCTION LED DRIVE IC (SN74LS42N) Control (A)	
78	50/60 IN	I	AC Input (50/60Hz)	
79	JOG2	I	JOG 2 Input	
80	JOG1	I	JOG 1 Input	

NOTE :

I : CMOS Input
O : CMOS Output
N : Nch Open Drain Output
P : Pch Open Drain Output
UN : Nch Open Drain Output with Pull-up Resistor
DP : Pch Open Drain Output with Pull-down Resistor
UI : CMOS Input with Pull-up Resistor
DI : CMOS Input with Pull-down Resistor

www.manualscenter.com

■ PD5170B (IC701) : AMPLIFIER CONTROL MICRO-COMPUTER

● Pin Function

No.	Pin Name	Description	I/O
1	+5V	+5V Power supply	
2	GND	GND	
3	VOL REF	A/D Reference Voltage Input	I
4	A. REC OUT MUTE	REC OUT Audio Output MUTE ON/OFF	O
5	N. C	Not Used	
6	4052A		O
7	4052B		O
8	4052INH		O
9	$\overline{\text{LINE MUTE}}$	LINE MUTE $\overline{\text{ON}}$/OFF	O
10	P. BASS 1	SUPER P. BASS1 ON/$\overline{\text{OFF}}$	O
11	P. BASS 2	SUPER P. BASS2 ON/$\overline{\text{OFF}}$	O
12	VOL. POSI	MAIN VOL Position	I
13	VOL. DOWN	VOL UP/DOWN (TA 7291S) Control	O
14	VOL. UP		O
15	R. VOL. ST	Not Used	O
16	R. VOL. CLK		O
17	R. VOL. DATA		O
18	E/R TUNER	System bus TUNER Enable / Request	I/O
19	E/R DAT	System bus DAT Enable / Request	I/O
20	E/R CT	System bus TAPE Enable / Request	I/O
21	E/R CD	System bus CD Enable / Request	I/O
22	E/R GEQ	System bus GEQ Enable / Request	I/O

	Pin 14	Pin 13
UP	H	L
DOWN	L	H
STOP	L	L

No.	Pin Name	Description	I/O
23	SD	System bus DATA	I/O
24	SC	System bus CLOCK	O
25	N.C	Not Used	I
26	$\overline{\text{RMT IN}}$	Remocon Signal Input Port	I
27	GND	GND	
28	$\overline{\text{RESET}}$	RESET PULSE Terminal	I
29	X IN	Connected to Ceramic resonator (4MHz).	
30	X OUT		
31	N. C	Not Used	
32	GND	GND	
33	Switching Destination		I
34			I
35			I
36		Not Used	I
37			I
38			I
39			I
40			I
41			O
42			O
43			O
44	FAN ERR	FAN ERR Terminal	I
45		Not Used	O
46			O
47			O
48	AD01. COTROL	AUDITION CONTROL	O
49		Not used	O

	Pin 33	Pin 34	Pin 35
SX-P720	H	L	H
SX-P920	L	H	H

No.	Pin Name	Description	I/O
50		Not Used	O
51			O
52	LED AI. B	LED Control	O
53	LED AUDITION		O
54		Not Used	O
55	LED P-BASS2	LED Control	O
56	LED P-BASS1		O
57	LED AI. A		O
58	PHONE IN/OUT	Not Used	I
59		Not Used	O
60			O
61			O
62	RELAY A	Speaker Relay Port	O
63	POWER IND	Power Indicator Port	O
64	POWER RY	Power ON/OFF Relay Port	O

- When POWER is OFF, POWER RY RELAY A, LINE MUTE will be output at the "L" level, and A. REC. OUT MUTE will be output at the "H" level. Other I/O ports will be specified to input, and the output port will be ouput at the "L" level.

www.manualscenter.com

7. DISASSEMBLY

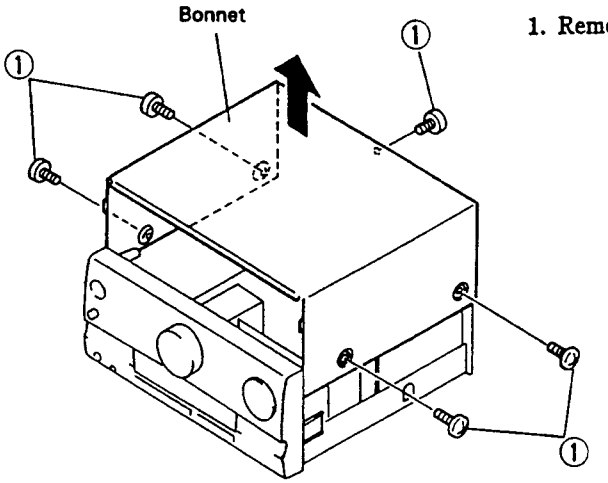

Fig. 1

1. Remove the Bonnet case. (Screw ① × 5)

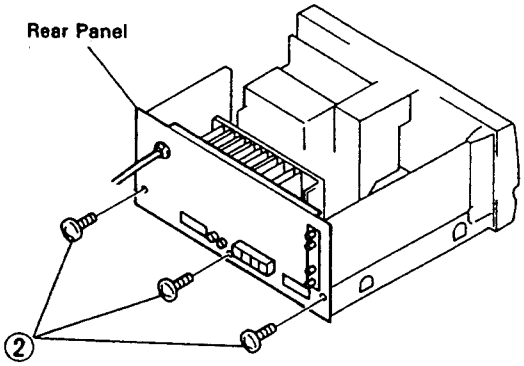

Fig. 2

2. Remove the three screws ② from the rear panel. (Screw ② × 3)

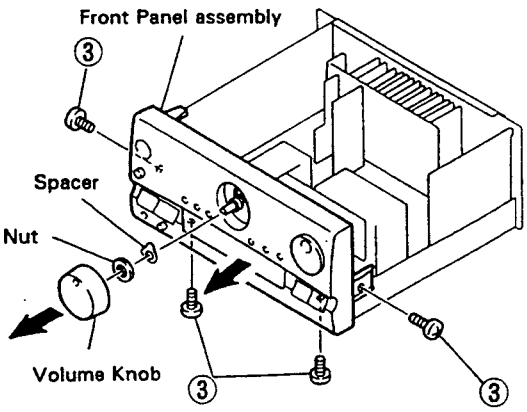

Fig. 3

3. Remove the Volume knob, nut, spacer in sequence.

4. Remove the four screws ③ from the front panel assembly.
   Remove the front panel assembly.

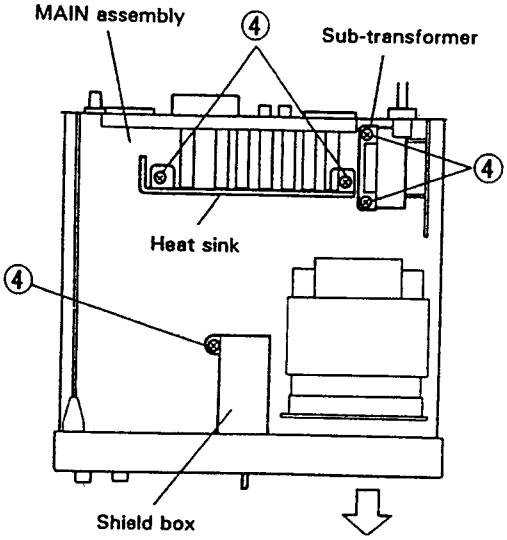

Fig. 4

5. Remove the five screws ④ from the MAIN assembly.
   - Heat sink × 2
   - Sub-transformer × 2
   - Shield box × 1

6. Remove the shield box.

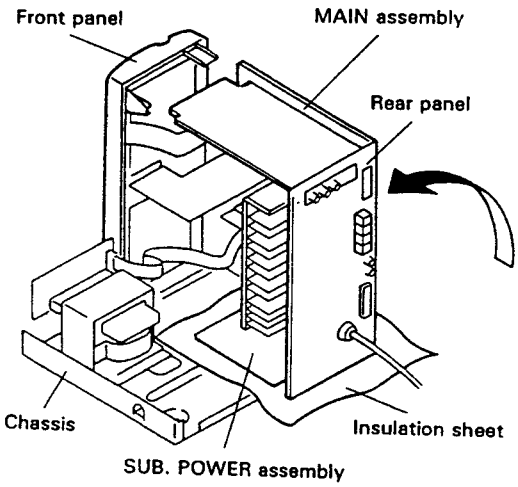

Fig. 5

7. Lift the front panel assembly and the rear panel. Remove the MAIN assembly from the chassis, and stand it by placing the SUB. POWER assembly at the bottom. Insert the insulation sheet into the space between the SUB. POWER assembly and the chassis.

www.manualscenter.com

8. FOR SX – P920/HB, HEWZI AND SX – P720/HB, HEWZI TYPES

NOTES:

- *Part without part number cannot be supplied.*
- *The ⚠ mark found on some component parts indicates the importance of the safety factor of the part. Therefore, when replacing, be sure to use parts of identical designation.*
- *Parts marked by "◉" are not always kept in stock. Their delivery time may be longer than usual or they may be unavailable.*

8.1 CONTRAST OF MISCELLANEOUS PARTS (FOR SX – P920/HB AND HEWZI TYPES)

SX – P920/HB, HEWZI and SX – P920/HE have the same construction except for the following :

Mark	Symbol & Description	Part No.			Remarks
		SX – P920/ HE type	SX – P920/ HB type	SX – P920/ HEWZI type	
◉	MAIN assembly	AWZ3719	AWZ3719	AWZ3720	
◉	SUB. POWER assembly	AWZ3727	AWZ3727	AWZ3723	
◉	FR. AMP assembly	AWZ3734	AWZ3734	AWZ3735	
	HEAD. P assembly	Non supply	Non supply	Non supply	*1
◉	DISPLAY assembly	AWZ3705	AWZ3705	AWZ3706	
◉	VR assembly	AWZ3708	AWZ3708	AWZ3709	
	TUNER Assembly	AWE1226	AWE1226	AWE1225	
⚠	AC Power cord	ADG1019	ADG1084	ADG1012	
	Operating instructions (English, French, German, Italian)	ARC1306	.....	.....	
	Operating instructions (English, French)	ARE1211	ARE1211	.....	
	Operating instructions (German, Italian)	ARC1305	.....	ARC1305	

*1 : The HEAD. P assemblies of HE and HB types are the same.

◉ MAIN ASSEMBLY (AWZ3720)

MAIN assembly (AWZ3720) and MAIN assembly (AWZ3719) have the same construction except for the following :

Mark	Symbol & Description	Part No.		Remarks
		AWZ3719	AWZ3720	
	L251, 252	ATH – 133	ATH – 059	
	L2001, L2002	.....	ATH – 059	
	C111	CKCYF103Z50	CKCYB103K50	
	C704	CKDYF473Z50	CKCYF473Z50	
	C2007 – C2009, C2011	.....	CKCYB103K50	
	C2012, C2013	.....	CCSQCH470J50	
	C2018	.....	CQMA473K250	
	C2019	.....	CKSQYB103K50	
	C2020, C2021	.....	CCSQCH101J50	
	C2022, C2023	.....	CKSQYB473K50	
	R251, R252	RD1/4PMFL100J	RD1/4PMFL101J	
	R2003	RS1/10S000J	.....	

◉ FR. AMP ASSEMBLY (AWZ3735)

FR. AMP assembly (AWZ3735) and FR. AMP assembly (AWZ3734) have the same construction except for the following :

Mark	Symbol & Description	Part No.		Remarks
		AWZ3734	AWZ3735	
	C2024, C2025	.....	CCSQCH101J50	

HEAD. P ASSEMBLY (HEWZI type)

HEAD. P assembly (HEWZI type) and HEAD. P assembly (HE type) have the same construction except for the following :

Mark	Symbol & Description	Part No.		Remarks
		HE type	HEWZI type	
	C2501, C2502	.....	CKSQYB473K50	

◉ DISPLAY ASSEMBLY (AWZ3706)

DISPLAY assembly (AWZ3706) and DISPLAY assembly (AWZ3705) have the same construction except for the following :

Mark	Symbol & Description	Part No.		Remarks
		AWZ3705	AWZ3706	
	C1001	CKDYF473Z50	CKCYF473Z50	
	C1002	CKDYF223Z50	CKCYF223Z50	
	C1006	CKDYB102K50	CKCYB102K50	
	R1025	.....	RS1/10S473J	
	R1033	RS1/10S473J	.....	

◉ VR ASSEMBLY (AWZ3709)

VR assembly (AWZ3709) and VR assembly (AWZ3708) have the same construction except for the following :

Mark	Symbol & Description	Part No.		Remarks
		AWZ3708	AWZ3709	
	C323	CKDYX104M25	CKCYX104M25	
	C2305, C2306	.....	CCSQCH101J50	
	C2307, C2308	.....	CCSQCH220J50	

www.manualscenter.com

◉ SUB. POWER ASSEMBLY (AWZ3723)

SUB. POWER assembly (AWZ3723) and SUB. POWER assembly (AWZ3727) have the same construction except for the following :

Mark	Symbol & Description	Part No.		Remarks
		AWZ3727	AWZ3723	
	C2026	.....	CQMA473K250	

TUNER ASSEMBLY (AWE1225)

TUNER assembly (AWE1225) and TUNER assembly (AWE1226) have the same construction except for the following :

Mark	Symbol & Description	Part No.		Remarks
		AWE1226	AWE1225	
	Q903, Q904	RN1203	.....	
	Q906	RN2201	.....	
	D902, D905–D907	HSS104–02	.....	
	D903, D904	1SS85	.....	
	L906	.....	LAU330K	
	TC901	.....	ACM–018	
	C908	.....	CKDYF223Z50	
	C909	.....	CKDYF103Z50	
	C913, C915	CKDYF223Z50	.....	
	C919	CKDYF223Z50	CKDYF473Z50	
	C922	CKDYF223Z50	CKPUYF223Z50	
	C952, C953	CKDYB122K50	CKDYB102K50	
	C961, C962	CKDYB272K50	CKDYB392K50	
	C968	CCDSL101J50	CCDCH101J50	
	C969	.....	CCDCH270J50	
	R911	RD1/8PM104J	.....	
	R914, R915, R919	RD1/8PM681J	.....	
	R917	RD1/8PM102J	.....	
	R920	RD1/8PM103J	RD1/8PM472J	
	R921	RD1/8PM392J	.....	
	R922	.....	RD1/8PM680J	
	R924	RD1/8PM331J	RD1/8PM561J	
	R925	.....	RD1/8PM221J	
	R955	RD1/8PM152J	RD1/8PM122J	
	R959, R960	RD1/8PM392J	RD1/8PM682J	
	Antenna terminal 4–P	AKA1010	.....	
	Antenna terminal 2–P	.....	AKA1012	
	2 Serial F. E. module assembly	AXQ1002	.....	
	4 Serial F. E. module assembly	.....	AXQ1004	
	AM RF Tuning block	AXX1012	.....	
	AM RF Tuning block	AXX1013	.....	
	AM RF Tuning block	.....	AXX1014	

8.2 CONTRAST OF MISCELLANEOUS PARTS (FOR SX-P720/HB AND HEWZI TYPES)

SX-P720/HB, HEWZI and SX-P720/HE have the same construction except for the following :

Mark	Symbol & Description	Part No.			Remarks
		SX-P720/ HE type	SX-P720/ HB type	SX-P720/ HEWZI type	
◉	MAIN assembly	AWZ3714	AWZ3714	AWZ3715	
◉	SUB. POWER assembly	AWZ3722	AWZ3722	AWZ3723	
◉	FR. AMP assembly	AWZ3730	AWZ3730	AWZ3731	
	HEAD. P assembly	Non supply	Non supply	Non supply	*1
◉	DISPLAY assembly	AWZ3701	AWZ3701	AWZ3702	
◉	VR assembly	AWZ3708	AWZ3708	AWZ3709	*2
	TUNER Assembly	AWE1226	AWE1226	AWE1225	*3
⚠	AC Power cord	ADG1019	ADG1084	ADG1012	
	Operating instructions (English, French, German, Italian)	ARC1306	.....	.....	
	Operating instructions (English, French)	ARE1211	ARE1211	.....	
	Operating instructions (German, Italian)	ARC1305	.....	ARC1305	

*1 : The HEAD. P assemblies of SX-P720/HE and HB types are the same as that of SX-P920/HE and HB types. The HEAD. P assembly of SX-P720/HEWZI type is the same as that of SX-P920/HEWZI types. Refer to page 55, "8.1 CONTRAST OF MISCELLANEOUS PARTS (FOR SX-P920/HB AND HEWZI TYPES)".

*2 : The VR assemblies of SX-P720/HE and HB types are the same as that of SX-P920/HE and HB types. The VR assembly of SX-P720/HEWZI type is the same as that of SX-P920/HEWZI type. Refer to page 55, "8.1 CONTRAST OF MISCELLANEOUS PARTS (FOR SX-P920/HB AND HEWZI TYPES)".

*3 : The TUNER assemblies of SX-P720/HE and HB types are the same as that of SX-P920/HE and HB types. The TUNER assembly of SX-P720/HEWZI type is the same as that of SX-P920/HEWZI type. Refer to page 56, "8.1 CONTRAST OF MISCELLANEOUS PARTS (FOR SX-P920/HB AND HEWZI TYPES)".

◉ MAIN ASSEMBLY (AWZ3715)

MAIN assembly (AWZ3715) and MAIN assembly (AWZ3714) have the same construction except for the following :

Mark	Symbol & Description	Part No.		Remarks
		AWZ3714	AWZ3715	
	L251, 252	ATH-133	ATH-059	
	L2001, L2002	.....	ATH-059	
	C704	CKDYF473Z50	CKCYF473Z50	
	C1023, C2012	.....	CCSQCH470J50	
	C2007-C2009, C2011	.....	CKCYB103K50	
	C2018	.....	CQMA473K250	
	C2019	.....	CKSQYB103K50	
	C2020, C2021, C2024, C2025	.....	CCSQCH101J50	
	C2022, C2023	.....	CKSQYB473K50	
	R251, R252	RD1/4PMFL100J	RD1/4PMFL101J	
	R2001, R2002	.....	RS1/10S000J	

www.manualscenter.com

◉ SUB. POWER ASSEMBLY (AWZ3723)

SUB. POWER assembly (AWZ3723) and SUB. POWER assembly (AWZ3722) have the same construction except for the following :

Mark	Symbol & Description	Part No.		Remarks
		AWZ3722	AWZ3723	
	C2026	.....	CQMA473K250	

◉ FR. AMP ASSEMBLY (AWZ3731)

FR. AMP assembly (AWZ3731) and FR. AMP assembly (AWZ3730) have the same construction except for the following :

Mark	Symbol & Description	Part No.		Remarks
		AWZ3730	AWZ3731	
	C2024, C2025	.....	CCSQCH101J50	

◉ DISPLAY ASSEMBLY (AWZ3702)

DISPLAY assembly (AWZ3702) and DISPLAY assembly (AWZ3701) have the same construction except for the following :

Mark	Symbol & Description	Part No.		Remarks
		AWZ3701	AWZ3702	
	C1001	CKDYF473Z50	CKCYF473Z50	
	C1002	CKDYF223Z50	CKCYF223Z50	
	C1006	CKDYB102K50	CKCYB102K50	
	R1025	.....	RS1/10S473J	
	R1033	RS1/10S473J	.....	

8.3 SCHEMATIC DIAGRAMS AND PCB CONNECTION DIAGRAMS (SX-P920/HEWZI AND SX-P720/HEWZI TYPES)

8.3.1 Over All Schematic Diagram

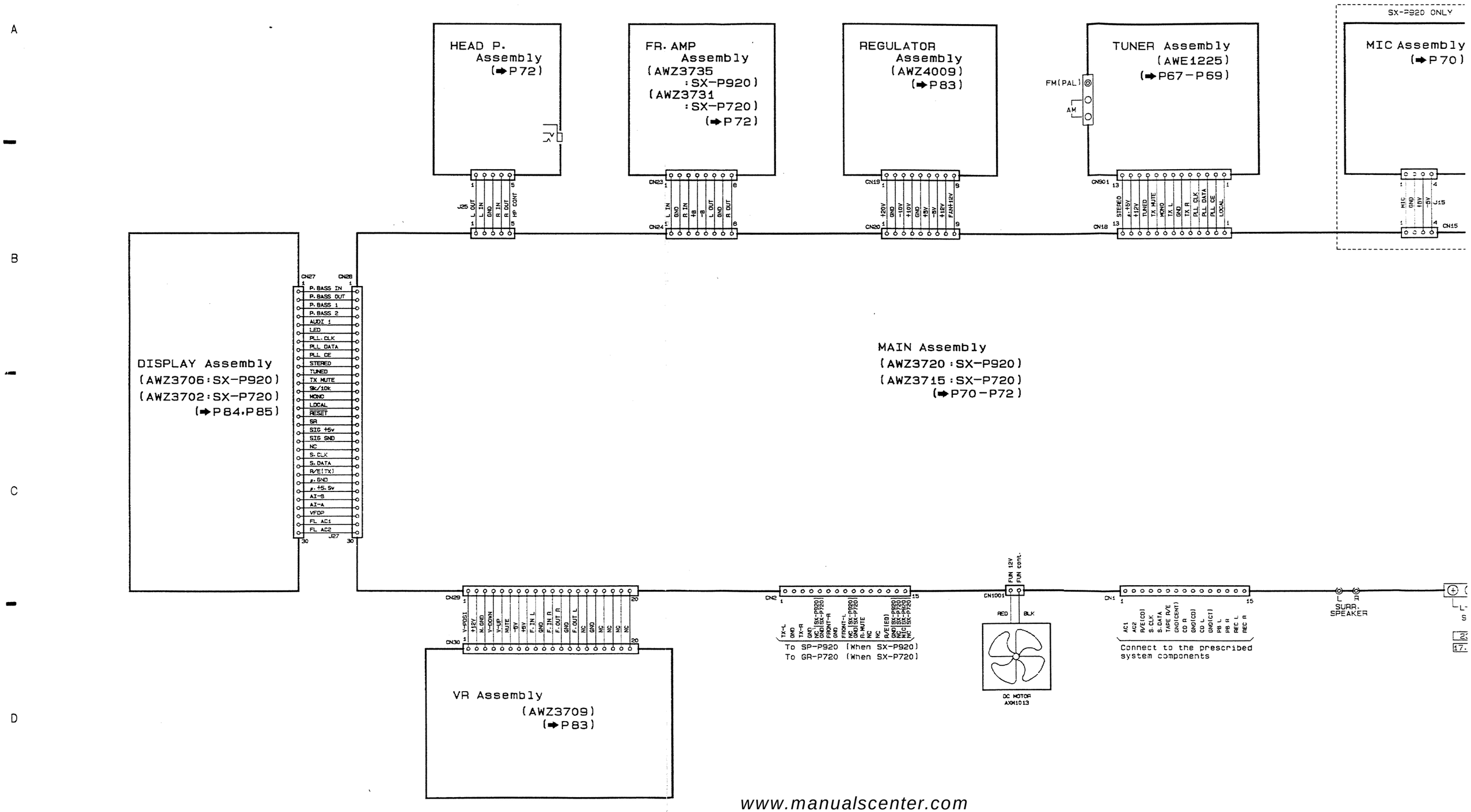

www.manualscenter.com

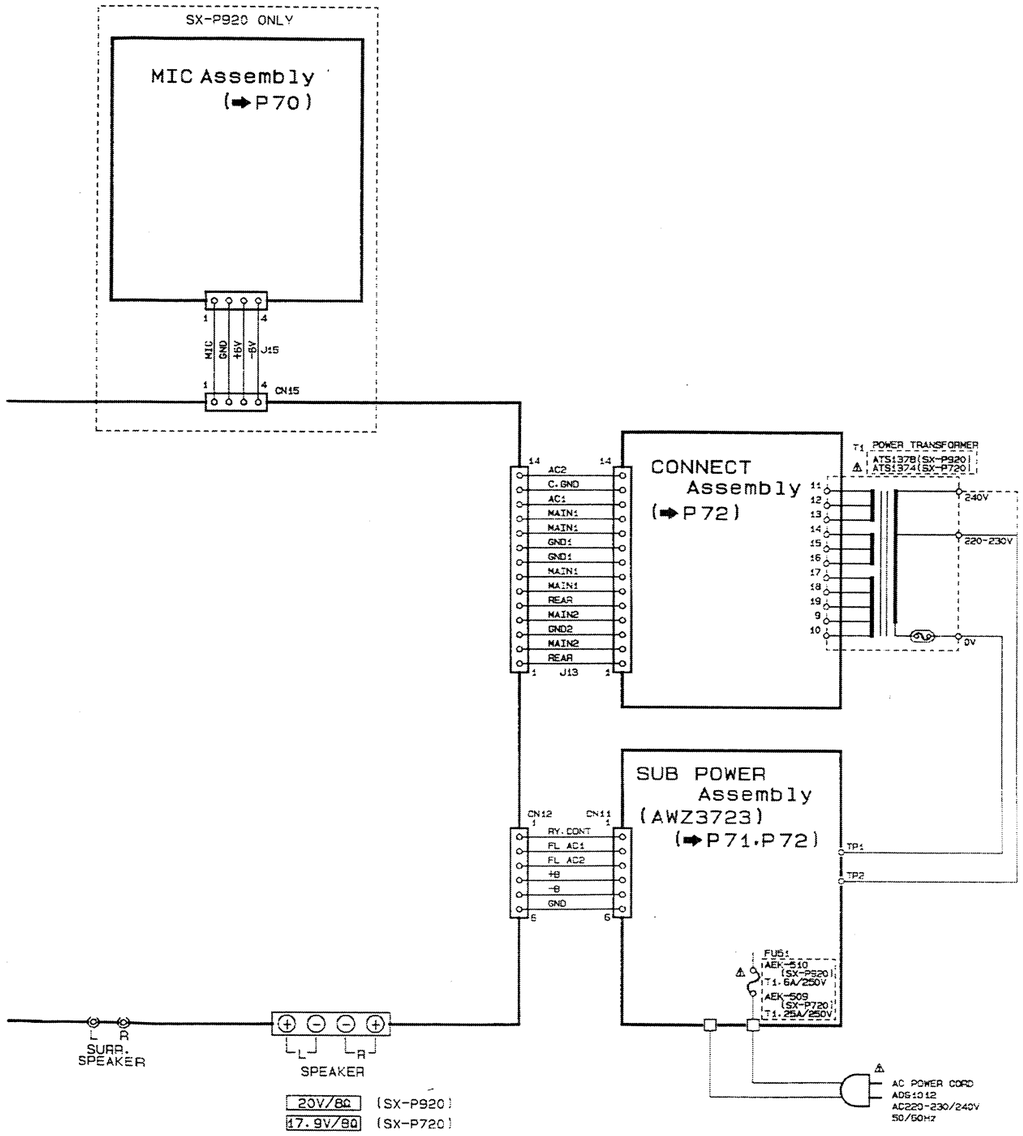

1. RESISTORS:
Indicated in Ω, ¼W, ⅛W, ±5% tolerance unless otherwise noted k : kΩ, M : MΩ, (F) : ±1%, (G) : ±2%, (K) : ±10% (M) : ±20% tolerance

2. CAPACITORS:
Indicated in capacity (μF)/voltage (V) unless otherwise noted p : pF
Indication without voltage is 50V except electrolytic capacitor.

3. VOLTAGE, CURRENT:
: Signal voltage at (SX-P920 : 50W + 50W, SX-P720 : 40W + 40W, 8Ω) output (1kHz)
: DC voltage (V) at no input signal
[a] and [b] in the circuit diagram describe the following :
a = SX-P920
b = SX-P720
None = SX-P920 and SX-P720
Value in ( ) is DC voltage at rated power.
mA : DC current at no input signal
mV : Signal voltage at FM 1kHz ±75kHz

4. OTHERS:
➡ : Signal route.
: Adjusting point
The ⚠ mark found on some component parts indicates the importance of the safety factor of the part. Therefore, when replacing, be sure to use parts of identical designation.
marked capacitors and resistors have parts numbers.
▼ (RED) : TEST POINT
This is the basic schematic diagram, but the actual circuit may vary due to improvements in design.

5. SWITCHES (The underline indicates the switch position)

DISPLAY Assembly

S701	LD
S702	VCR/DAT
S703	PHONO
S704	TAPE
S705	TUNER
S706	CD
S709	POWER STANDBY/ON
S710	AI. A
S711	SUPER P. BASS (SX-P920 ONLY)
S712	AI. B
S713	AI. MEMORY
S714	AUDITION (SX-P920 ONLY)
S715	SUPER P. BASS (SX-P720 ONLY)
S1001	BAND
S1002	M. SCAN
S1003	CLOCK ADJ
S1005	MEMORY
S1006	SET
S1008	LOCAL
S1009	WAKE UP
S1010	FREQ/STATION
S1011	REC
S1030	TUNING JOG

www.manualscenter.com

This P. C. B. connection diagram is viewed from the foil side.

8.3.2 TUNER assembly

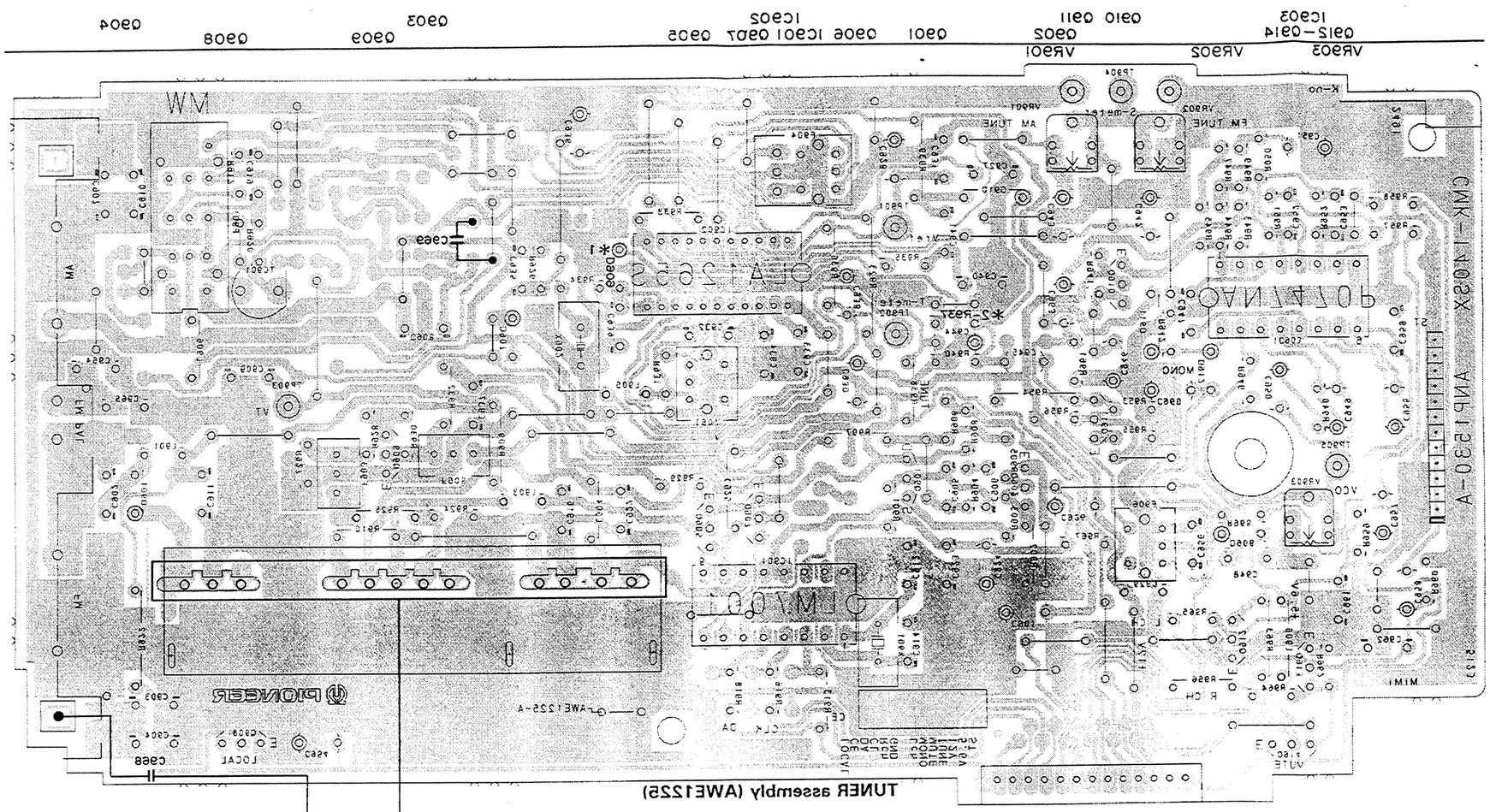

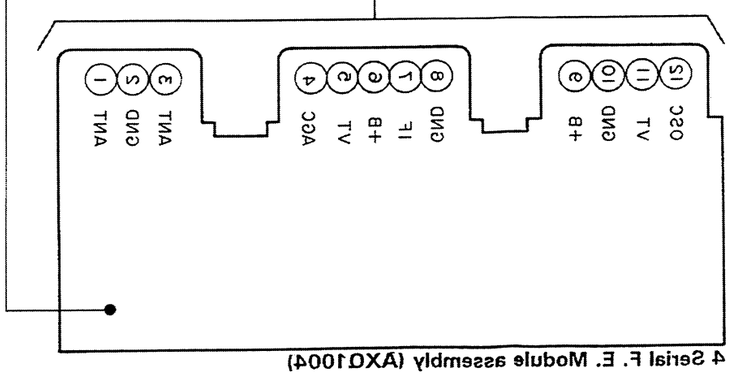

4 Serial F. E. Module assembly (AXD1004)

www.manualscenter.com

NOTE :
*1 is indicated as R937 on the P. C. Board.
*2 is indicated as D909 on the P. C. Board.

This P. C. B connection diagram is viewed from the parts mounted side.

www.manualscenter.com

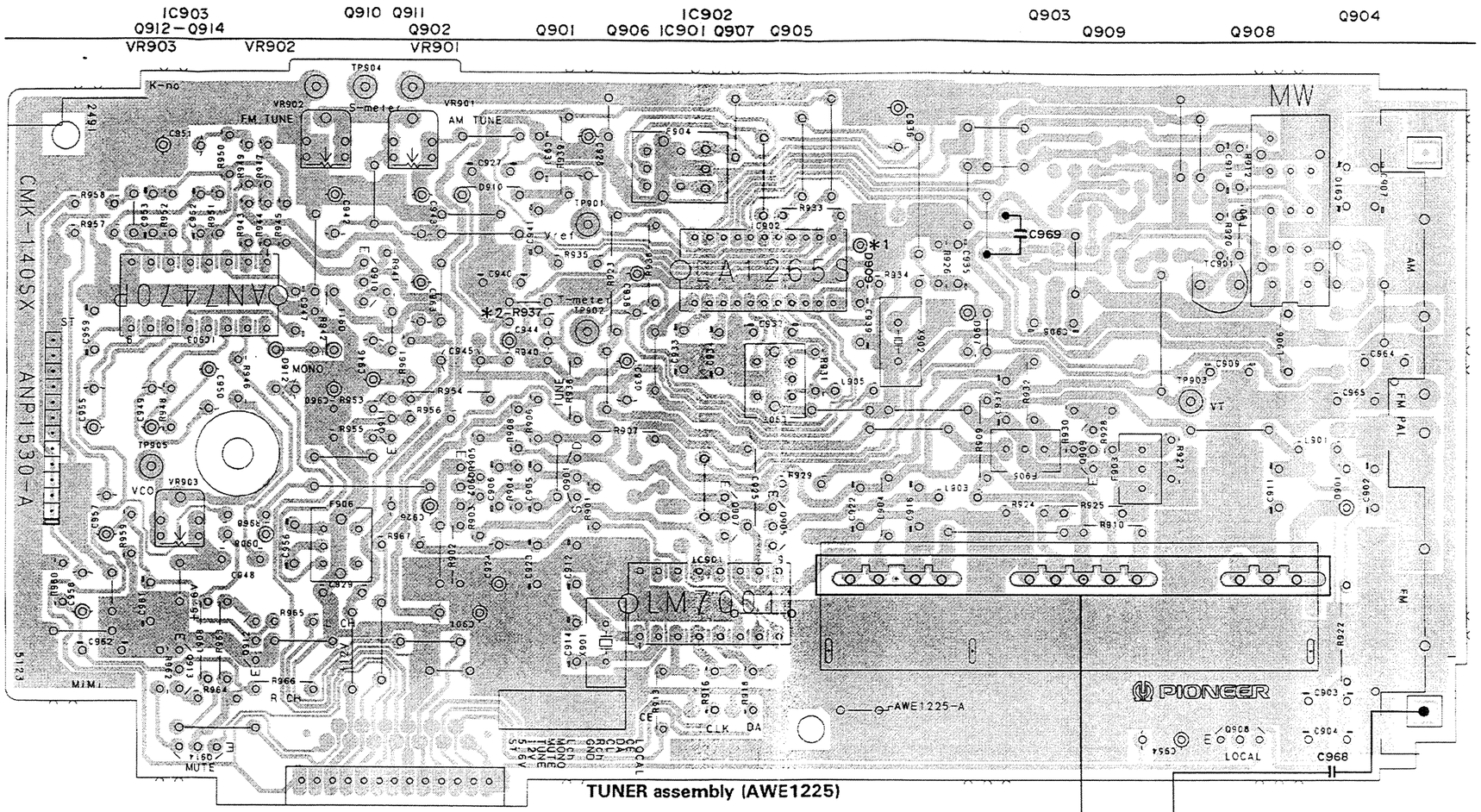

TUNER assembly (AWE1225)

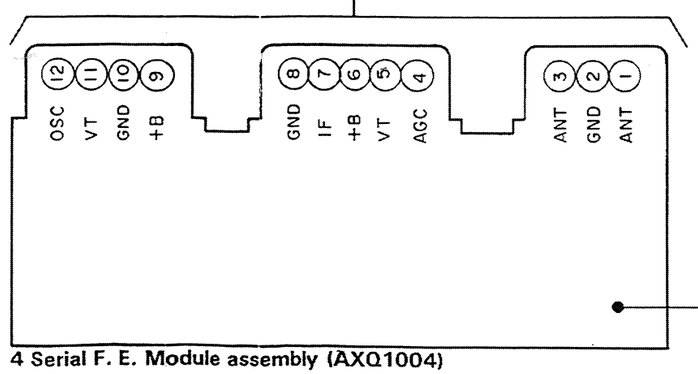

4 Serial F. E. Module assembly (AXQ1004)

NOTE

1. This P.C.B connection diagram is viewed from the parts mounted side.
2. The parts which have been mounted on the board can be replaced with those shown with the corresponding mating symbols listed in the following Table.

P.C.B. pattern diagram indication	Corresponding part symbol	Part Name
Q504 E C B	E C B or E C B	Transistor
Q215 C C C	E C B or E C B	Radiator type transistor
D203	D203	Diode
R237	R237	Resistor
C513	+	Capacitor (Polarized)
C516		Capacitor (Non-polarized)

Others

P.C.B. pattern diagram indication	Part Name
IC	IC
S	Switch
RY	Relay
L	Coil
F	Filter
VR	Variable resistor or Semi-fixed resistor

3. The capacitor terminal marked with ⊖ (double circles) shows negative terminal.
4. The diode terminal marked with ⊖ (double circles) shows cathode side.
5. The transistor terminal to which E is affixed shows the emitter.

NOTE :
**1 is indicated as R937 on the P. C. Board.*
**2 is indicated as D909 on the P. C. Board.*

IC901 LM7001

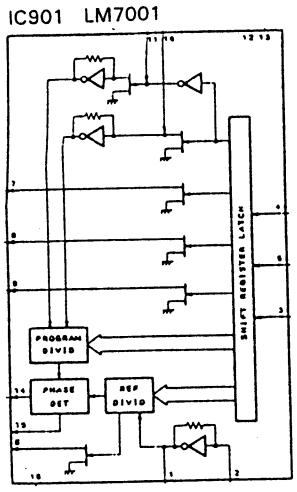

IC901 (LM7001)

Pin No.	Voltage	Pin No.	Voltage
1	1.1	9	0.46
2	1.5	10	0 (1.7 when AM)
3	0	11	2.7
4	0	12	5.0
5	0	13	5.0
6	0	14	0.7
7	—	15	—
8	0	16	0

IC902 LA1265S

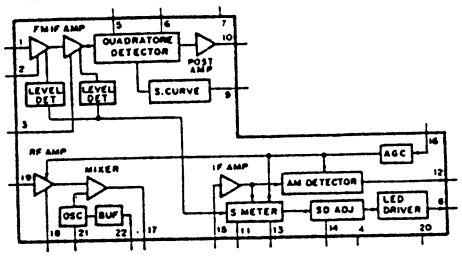

IC902 (LA1265S)

Pin No.	Voltage	Pin No.	Voltage	Pin No.	Voltag
1	2.3	10	2.8	17	0
2	2.3	11	1.5		12.0 (whe
3	2.3	12	1.5	18	0
4	0	13	1.4 (when MAX)		2.0 (wher
5	12.0	14	1.4 (when MAX)	19	0
6	12.0		0 (when AM)		2.0 (wher
7	12.0	15	2.3	20	3.8
8	0 (T)		1.1 (when AM)	21	3.8
	5.1 (D)	16	1.4	22	2.8
9	3.8				1.5 (wher

NOTE :
(T) when TUNE IND. is ON, (D) when TUNE IND. is OFF.

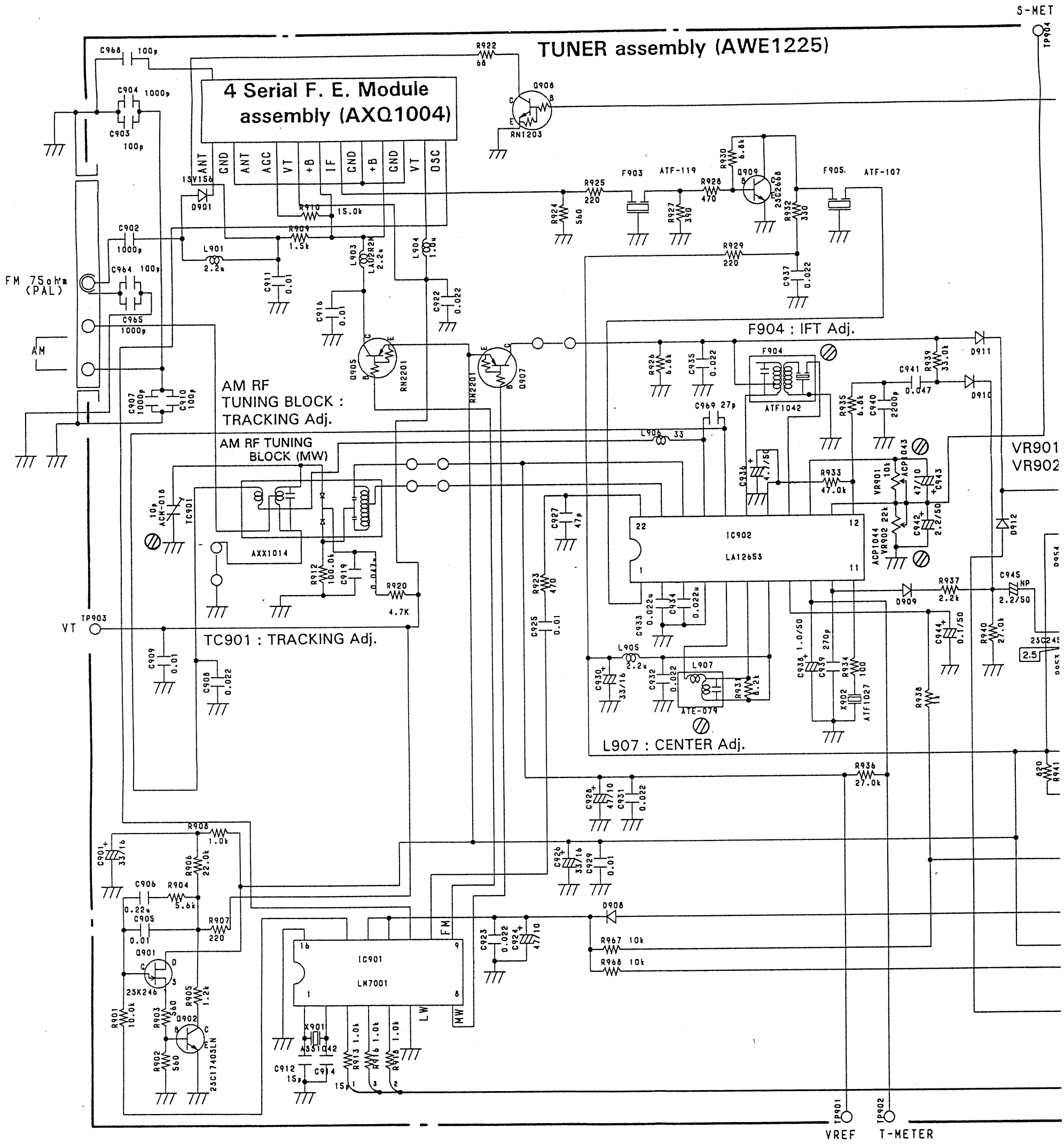

NOTE :
The TUNER assemblies of SX-P920 and SX-P720 types are the same.

www.manualscenter.com

Pin No.	Voltage	Pin No.	Voltage
10	2.8	17	0
11	1.5		12.0 (when AM)
12	1.5	18	0
13	1.4 (when MAX)		2.0 (when AM)
14	1.4 (when MAX)	19	0
	0 (when AM)		2.0 (when AM)
15	2.3	20	3.8
	1.1 (when AM)	21	3.8
16	1.4	22	2.8
			1.5 (when AM)

I, (D) when TUNE IND. is OFF.

IC903 AN7470P

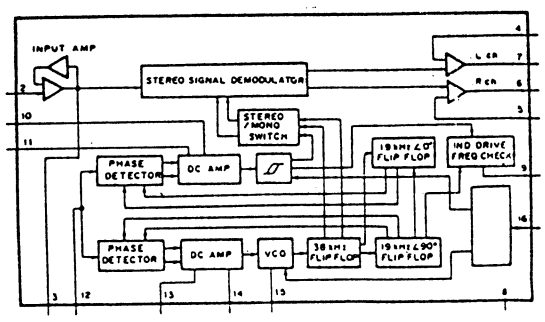

IC903 (AN7470P)

Pin No.	Voltage	Pin No.	Voltage	Pin No.	Voltage
1	11.2	9	4.9	15	3.2
2	2.6		0.6 (when STEREO)	16	0
3	6.1				11.4 (when AM)
4	8.9	10	2.6		
5	8.9	11	2.6		4.0 (when MONO)
6	3.9	12	2.6		
7	3.9	13			
8	0	14	2.6		

S-METER

TP904

VCO

TP905

ATF-107

VR903 : VCO Adj.

VR901 : MW TUNED IND. Adj.

VR902 : FM TUNED IND. Adj.

IC903 AN7470P

F906 ATF1088

Q911 2SC2458

Q910 2SC2458

Q912 2SC2458

Q913 2SC2458

Q914 2SA1048

ATF1027

L908 2.2u

CN901

LOCAL
PLL CE
PLL DA
PLL CL
Rch
GND
Lch
MONO
MUTE
TUNE
+12V
+5.6V
STEREO

To MAIN Assembly CN18 (To page 70)

OUTPUT LEV
1V

PLL(1:3)

TP902

T-METER

www.manualscenter.com

8.3.3 MAIN assembly, SUB. POWER assembly, FR. AMP assembly, MIC assembly, HEAD. P assembly AND CONNECT assembly

www.manualscenter.com

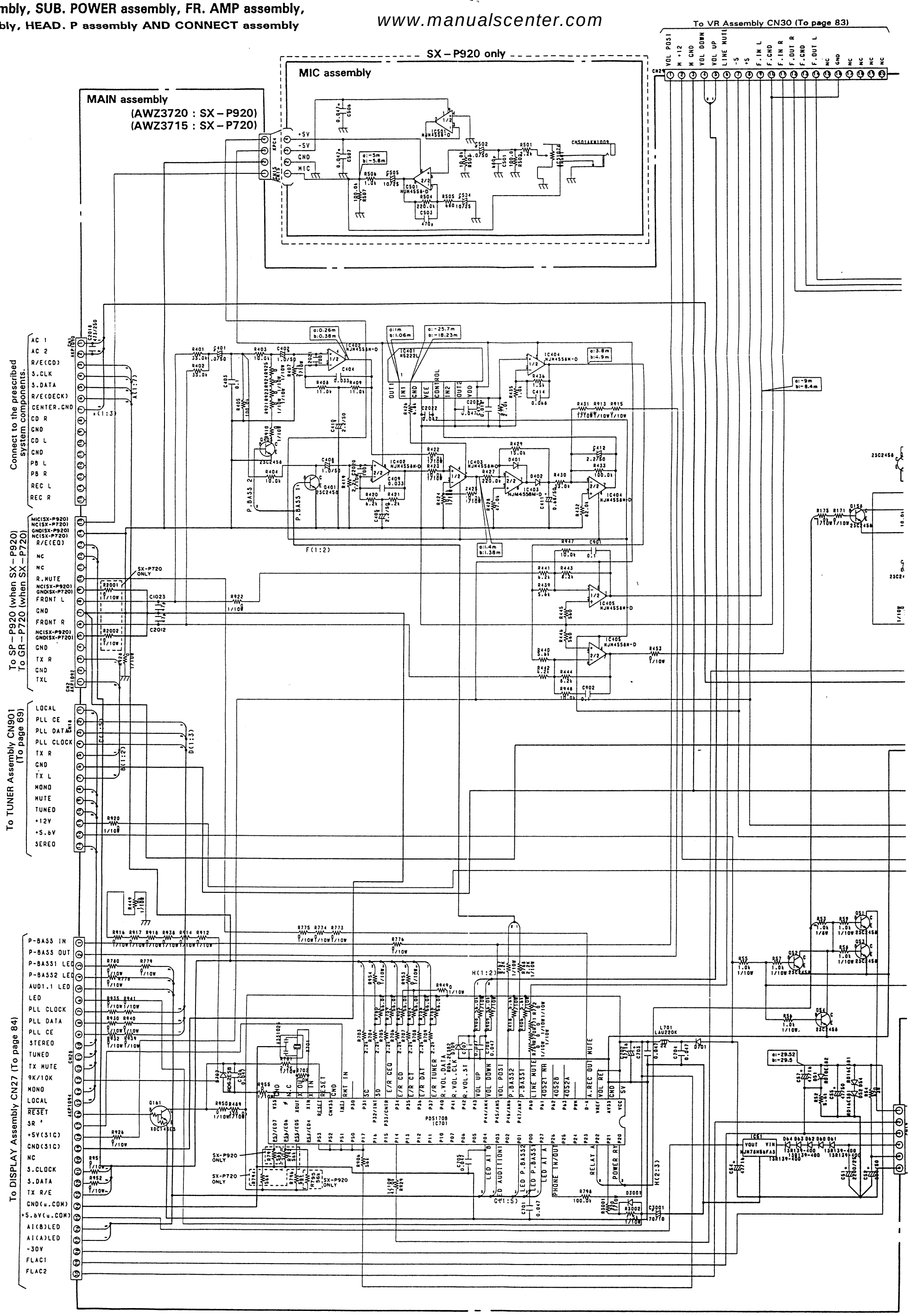

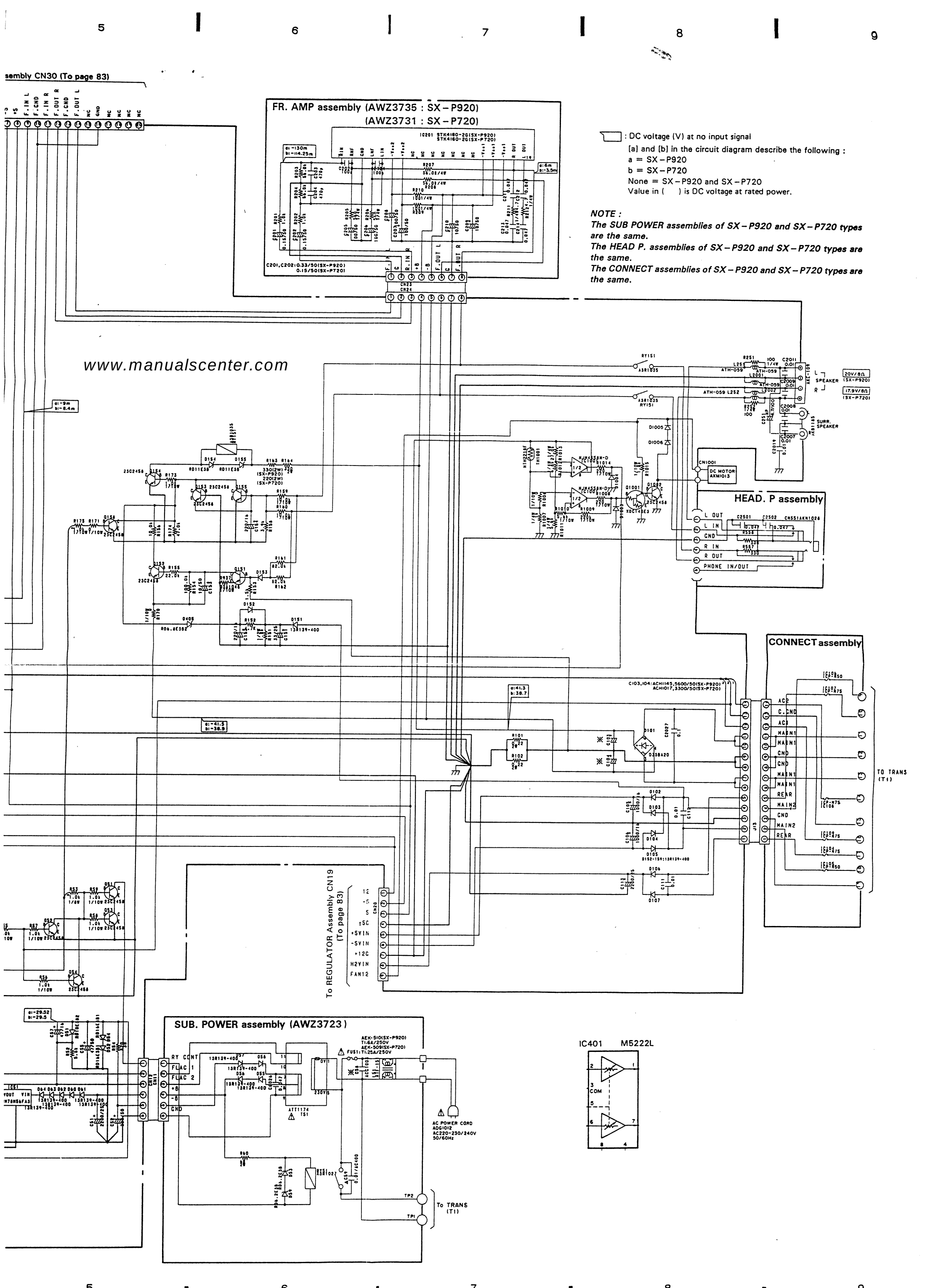
sembly CN30 (To page 83)
FR. AMP assembly (AWZ3735 : SX – P920)
(AWZ3731 : SX – P720)
: DC voltage (V) at no input signal
[a] and [b] in the circuit diagram describe the following :
a = SX – P920
b = SX – P720
None = SX – P920 and SX – P720
Value in ( ) is DC voltage at rated power.
NOTE :
The SUB POWER assemblies of SX – P920 and SX – P720 types are the same.
The HEAD P. assemblies of SX – P920 and SX – P720 types are the same.
The CONNECT assemblies of SX – P920 and SX – P720 types are the same.
www.manualscenter.com
HEAD. P assembly
CONNECT assembly
To REGULATOR Assembly CN19
(To page 83)
SUB. POWER assembly (AWZ3723)
IC401 M5222L
TO TRANS (T1)
To TRANS (T1)
SPEAKER
SURR. SPEAKER
DC MOTOR AXM1013
AC POWER CORD ADG1012 AC220-230/240V 50/60Hz

www.manualscenter.com

MAIN assembly (AWZ3720 : SX – P920)
(AWZ3715 : SX – P720)

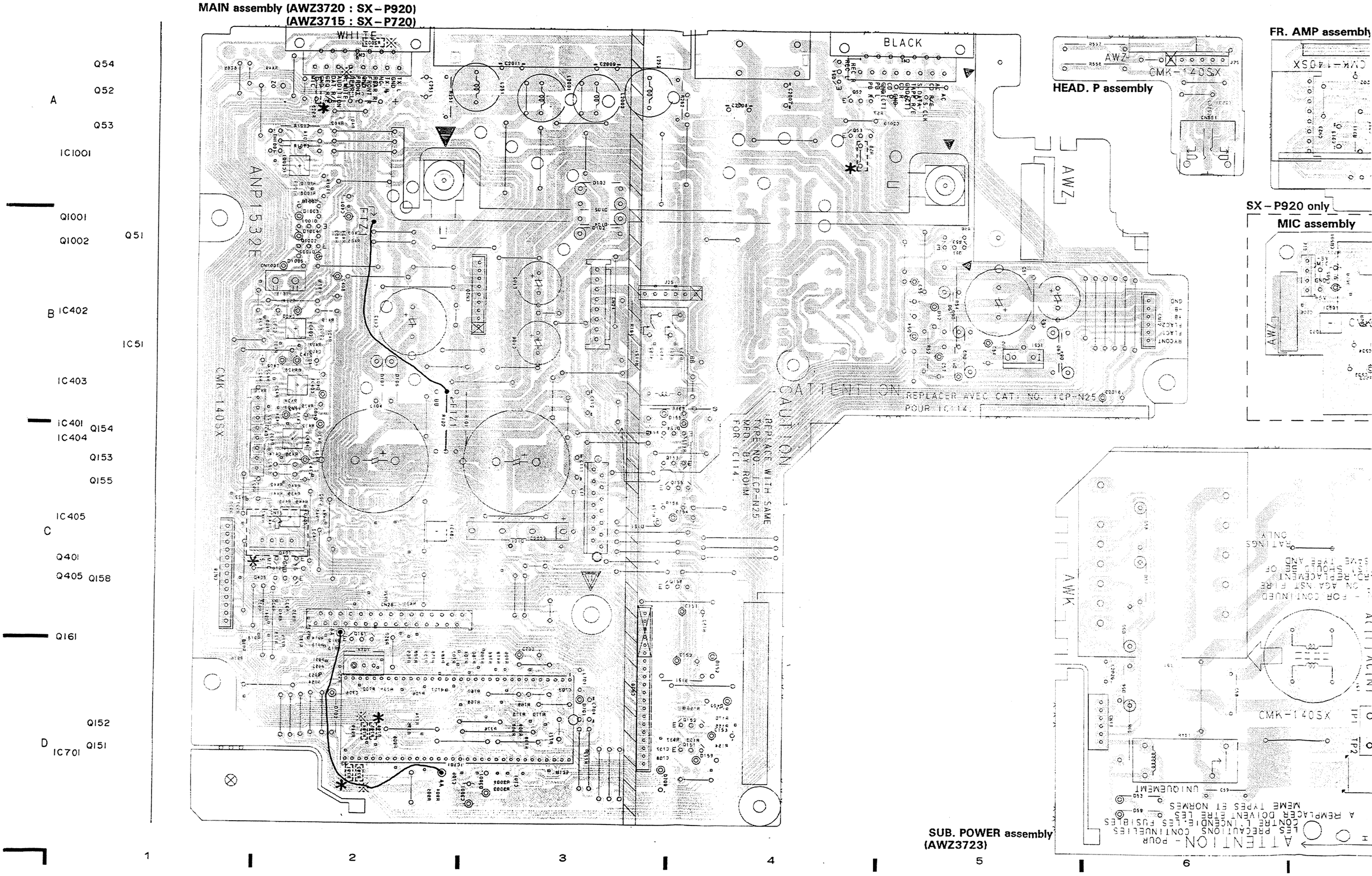

www.manualscenter.com

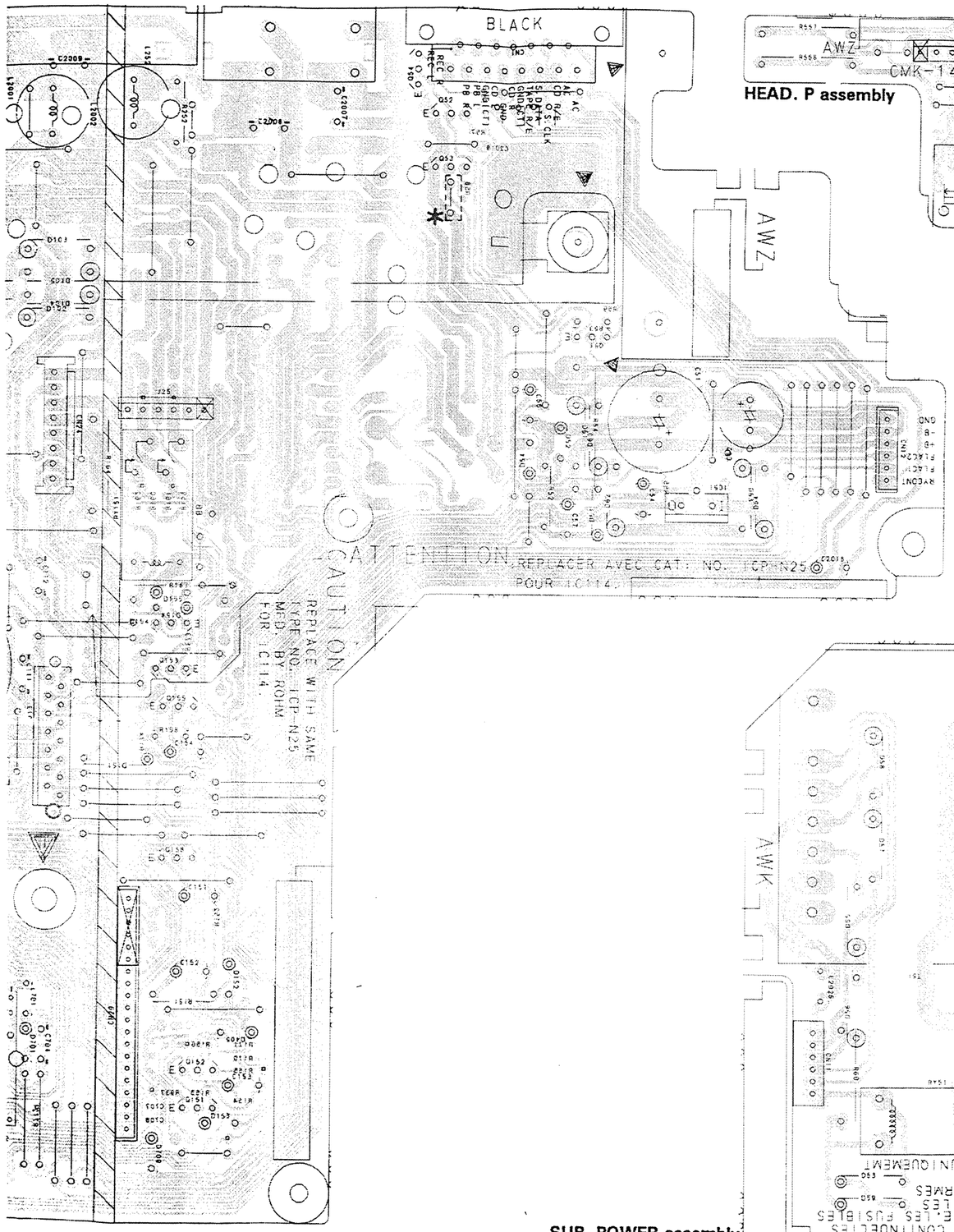

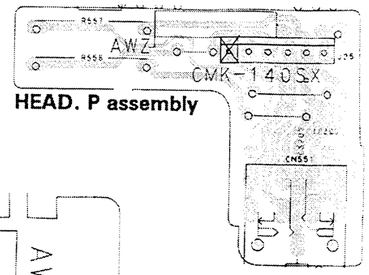

HEAD. P assembly

FR. AMP assembly (AWZ3735 : SX – P920) (AWZ3731 : SX – P720)

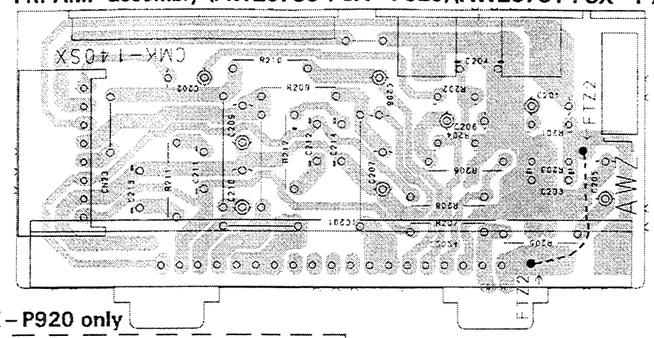

SX – P920 only

MIC assembly

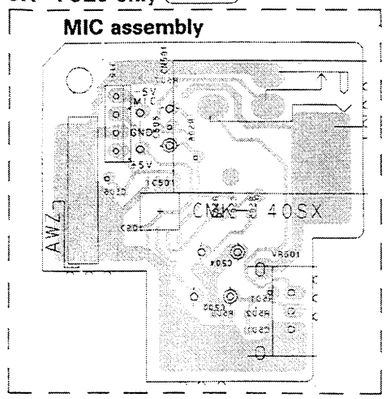

CONNECT assembly

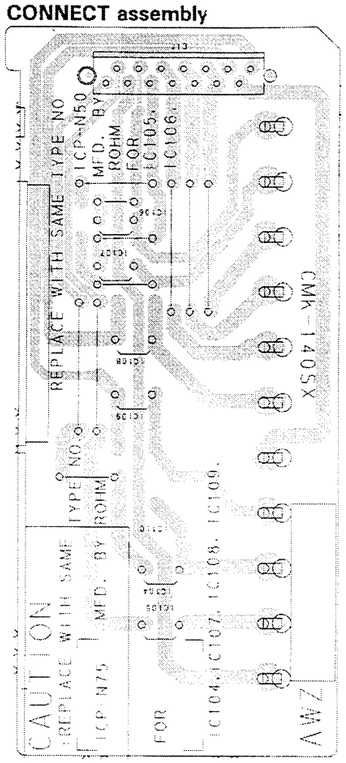

NOTE
1. This P.C.B connection diagram is viewed from the parts mounted side.
2. The parts which have been mounted on the board can be replaced with those shown with the corresponding wiring symbols listed in the following Table.

P.C.B. pattern diagram indication	Corresponding part symbol	Part Name
Q504 (E C B)	Q504 (E C B) or Q504 (E C B)	Transistor
Q215	Q215	Radiator type transistor
D203	D203	Diode
R237	R237	Resistor
C513	C513	Capacitor (Polarity)
C518	C518	Capacitor (Non-polarity)

Others

P.C.B. pattern diagram indication	Part Name
IC	IC
S	Switch
RY	Relay
L	Coil
F	Filter
VR	Variable resistor or Semi-fixed resistor

3. The capacitor terminal marked with ⊖ (double circles) shows negative terminal.
4. The diode terminal marked with ⊖ (double circles) shows cathode side.
5. The transistor terminal to which E is affixed shows the emitter.

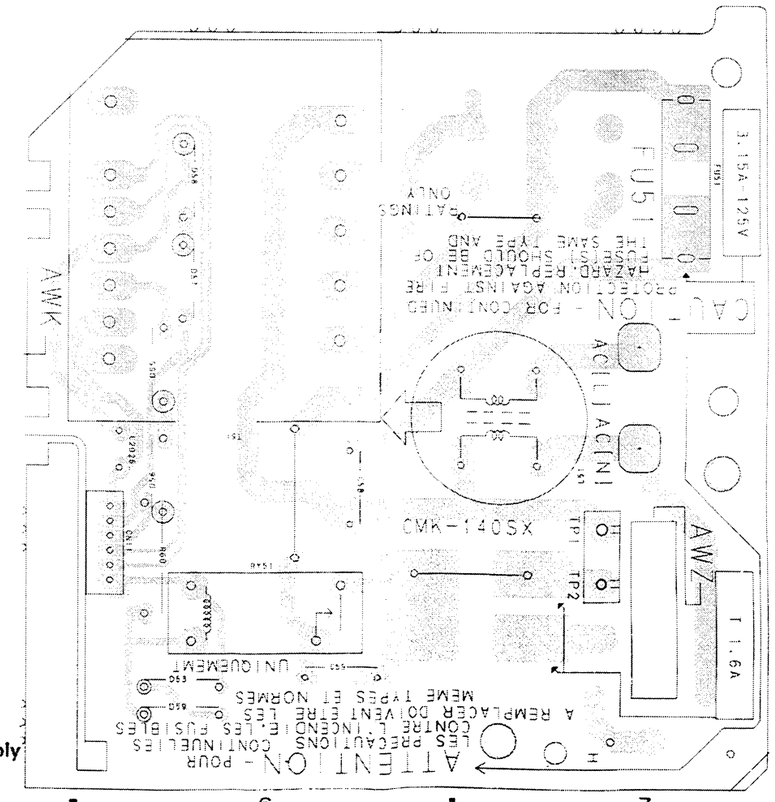

SUB. POWER assembly (AWZ3723)

* SX – P920 ONLY
※ SX – P720 ONLY

This P. C. B connection diagram is viewed from the parts mounted side.

www.manualscenter.com

SX-P920/HEW2I, SX-P720/HEW2I

FR. AMP assembly (AWZ2735 : SX-P920) (AWZ2731 : SX-P720)

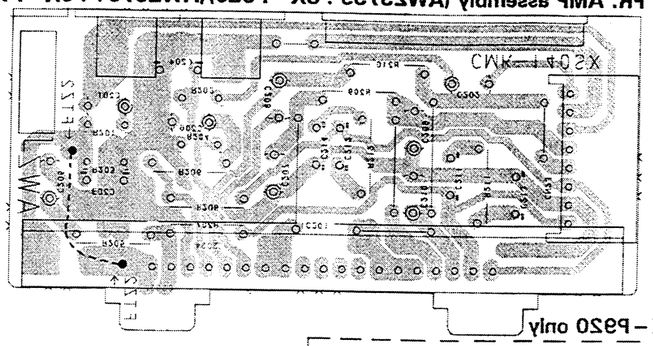

HEAD. P assembly

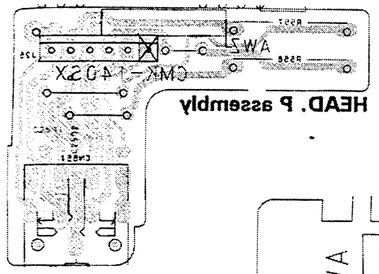

SX-P920 only

MIC assembly

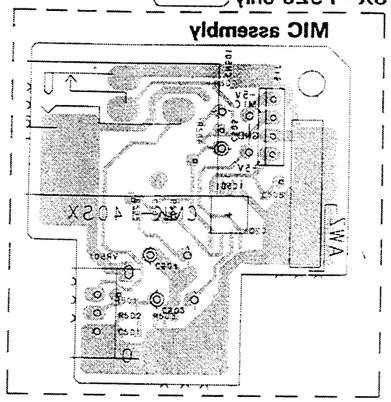

CONNECT assembly

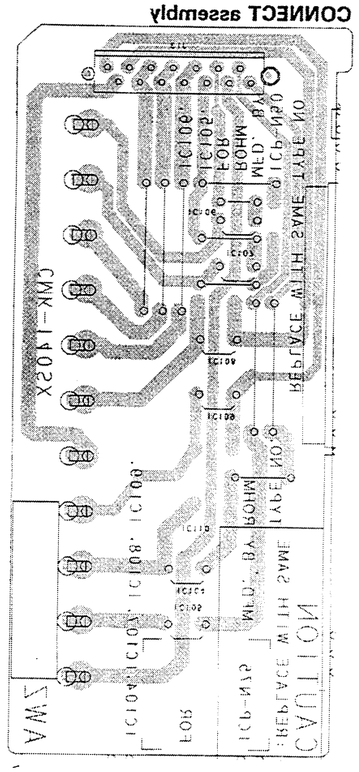

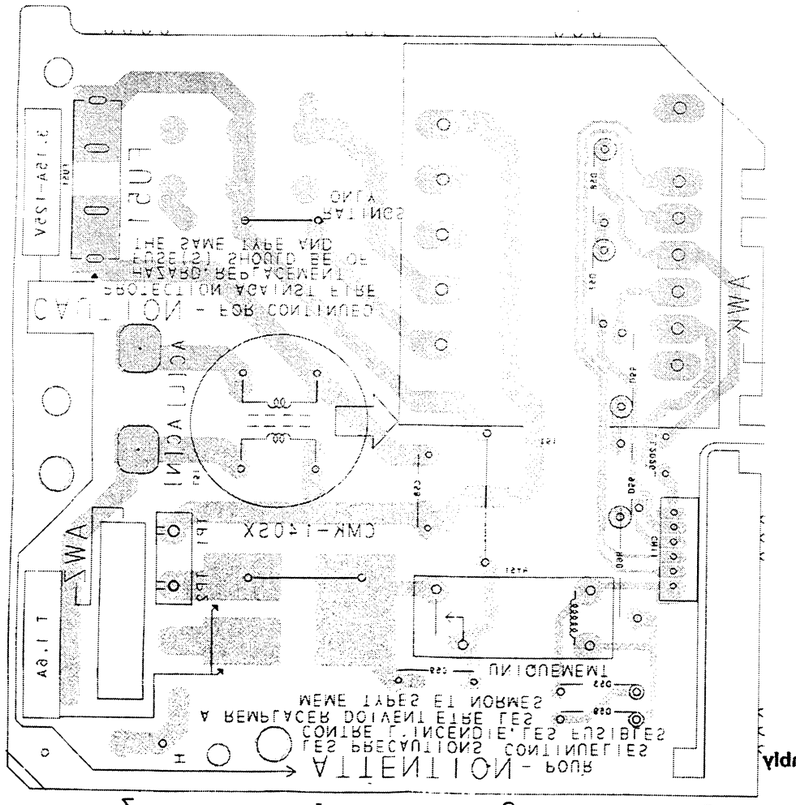

SUB. POWER assembly (AWZ2723)

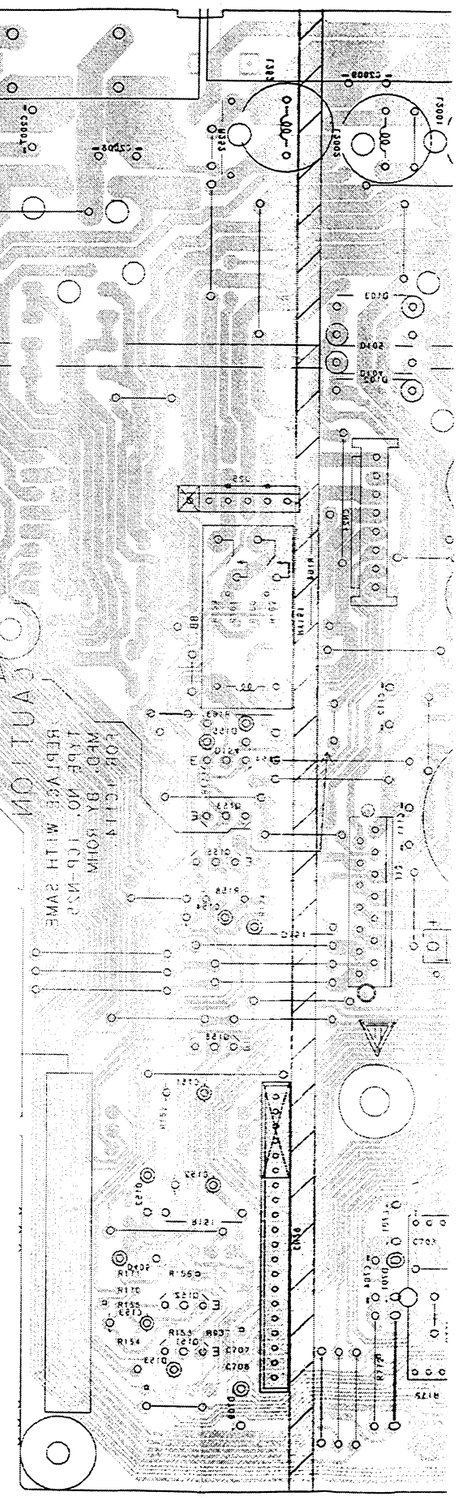

* SX-P920 ONLY
※ SX-P720 ONLY

This P. C. B. connection diagram is viewed from the foil side.

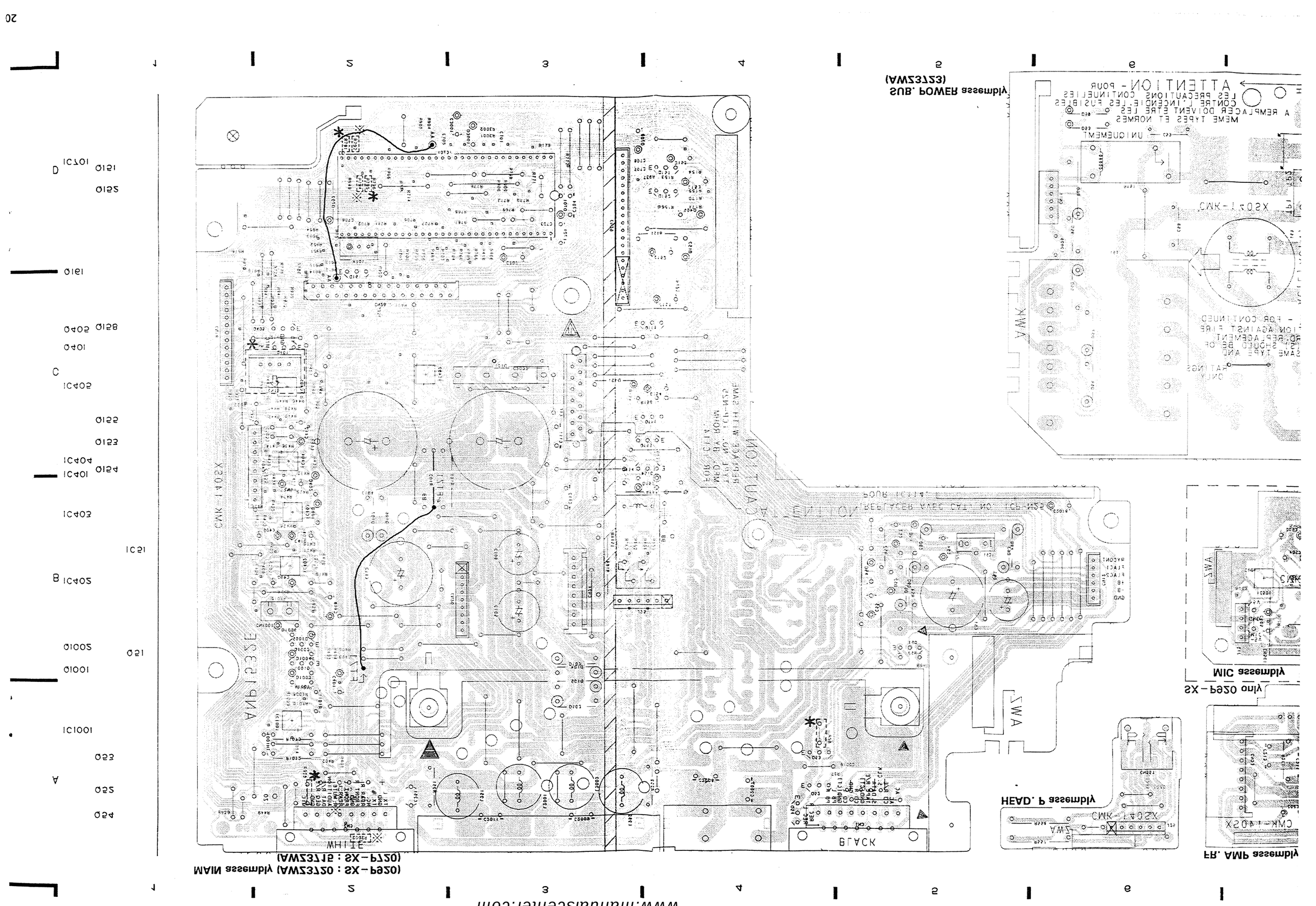

www.manualscenter.com

MAIN assembly (AWZ3720 : SX-P920)
(AWZ3715 : SX-P720)

FR. AMP assembly

HEAD. P assembly

SX-P920 only

MIC assembly

SUB. POWER assembly
(AWZ3723)

8.3.4 DISPLAY assembly, VR assembly AND REGULATOR assembly

This P.C.B. connection diagram is viewed from the foil side.

* SX-P920 ONLY
※ SX-P720 ONLY

www.manualscenter.com

VR assembly
(AWZ2709)

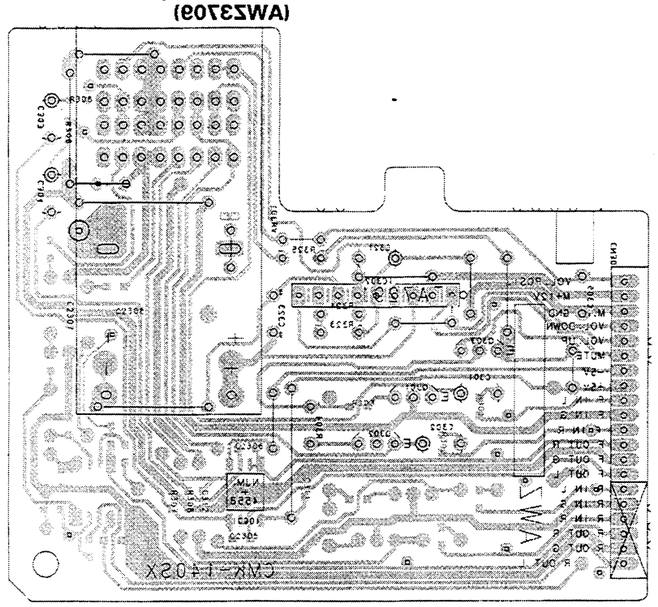

REGULATOR assembly
(AWZ4009)

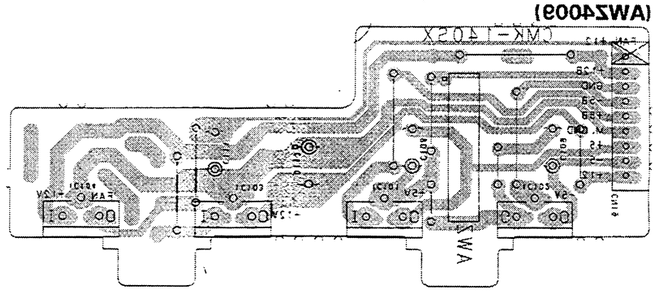

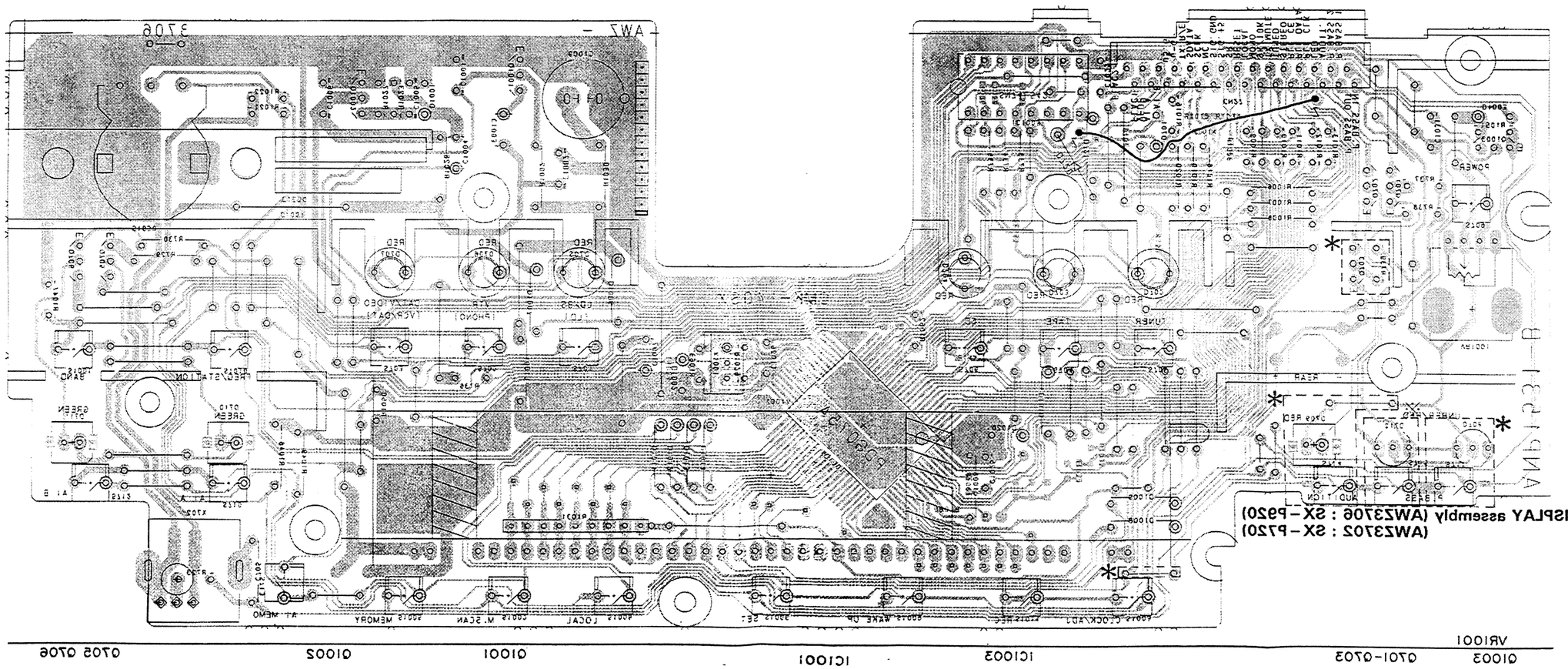

DISPLAY assembly (AWZ2706 : SX-P920)
(AWZ2702 : SX-P720)

SX-P920/HEWZI, SX-P720/HEWZI

This P. C. B connection diagram is viewed from the parts mounted side.

NOTE

1. This P.C.B connection diagram is viewed from the parts mounted side.
2. The parts which have been mounted on the board can be replaced with those shown with the corresponding wiring symbols listed in the following Table.

P.C.B. pattern diagram indication	Corresponding part symbol	Part Name
Q504 E C B	E C B or E C B	Transistor
Q215	or	Radiator type transistor
D203	D203	Diode
R237	R237	Resistor
C513		Capacitor (Polarity)
C518		Capacitor (Non-polarity)

Others

P.C.G. pattern diagram indication	Part Name
IC	IC
S	Switch
RY	Relay
L	Coil
F	Filter
VR	Variable resistor or Semi-fixed resistor

3. The capacitor terminal marked with (double circles) shows negative terminal.
4. The diode terminal marked with (double circles) shows cathode side
5. The transistor terminal to which E is affixed shows the emitter.

✱ SX−P920 ONLY
※ SX−P720 ONLY

www.manualscenter.com

VR assembly (AWZ3709)

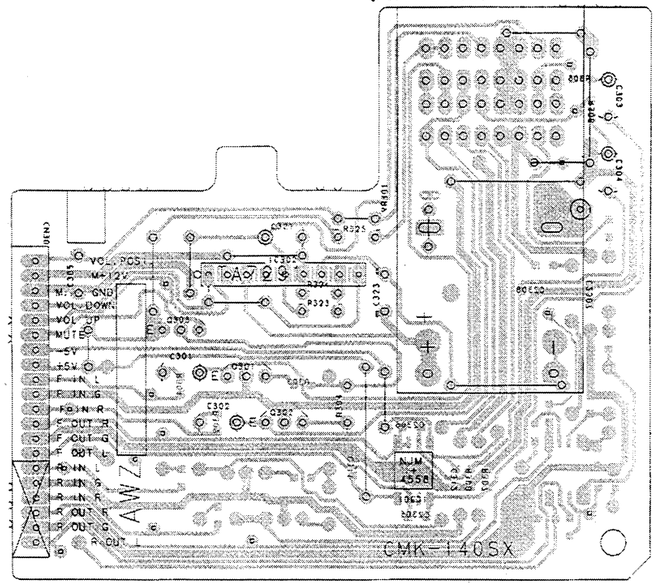

REGULATOR assembly (AWZ4009)

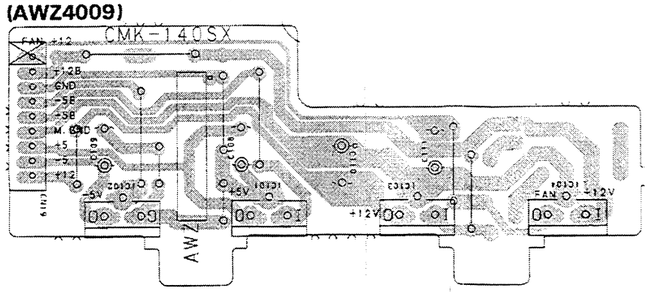

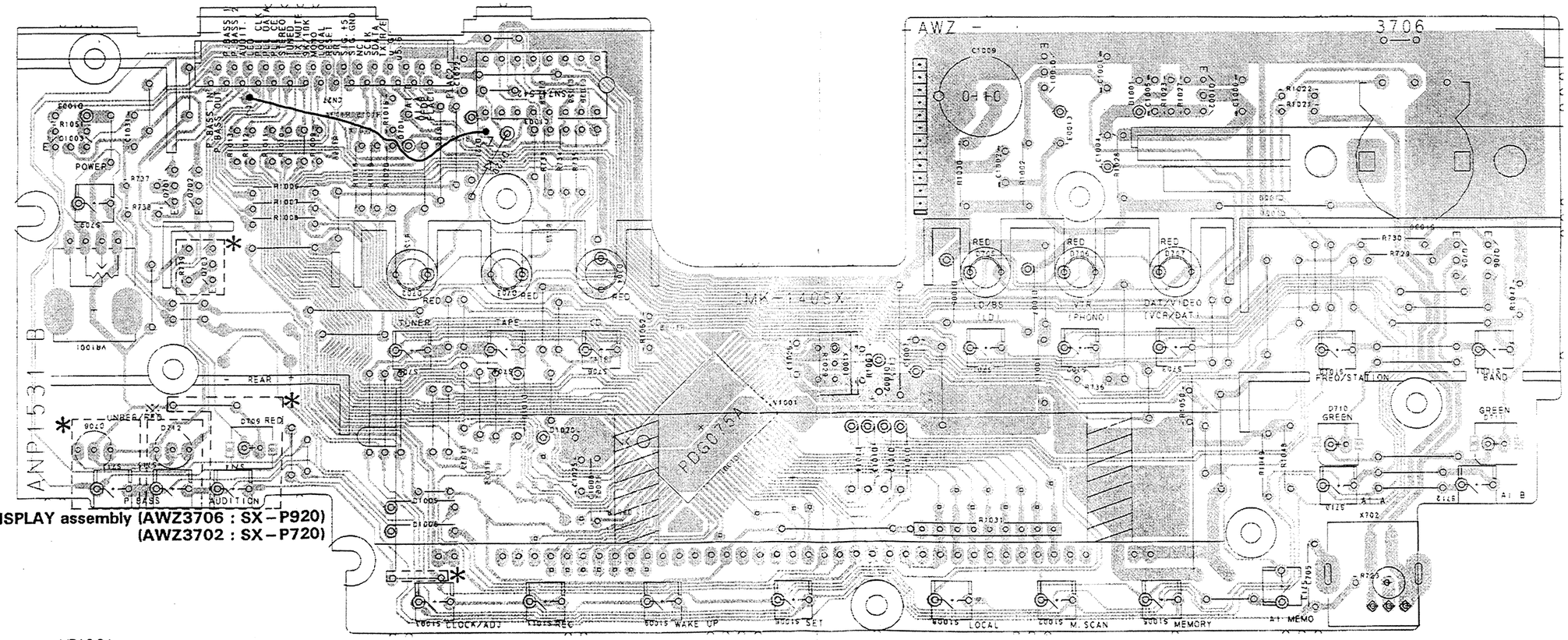

DISPLAY assembly (AWZ3706 : SX−P920)
(AWZ3702 : SX−P720)

VR1001
Q1003 Q701-Q703 IC1003 IC1001 Q1001 Q1002 Q705 Q706

REGULATOR assembly (AWZ4009)

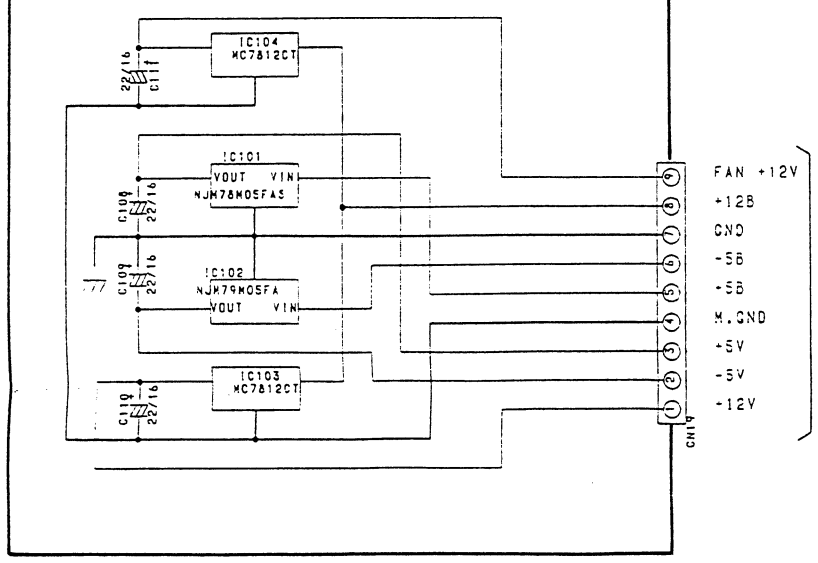

To MAIN Assembly CN20
(To page 72)

VR assembly (AWZ3709)

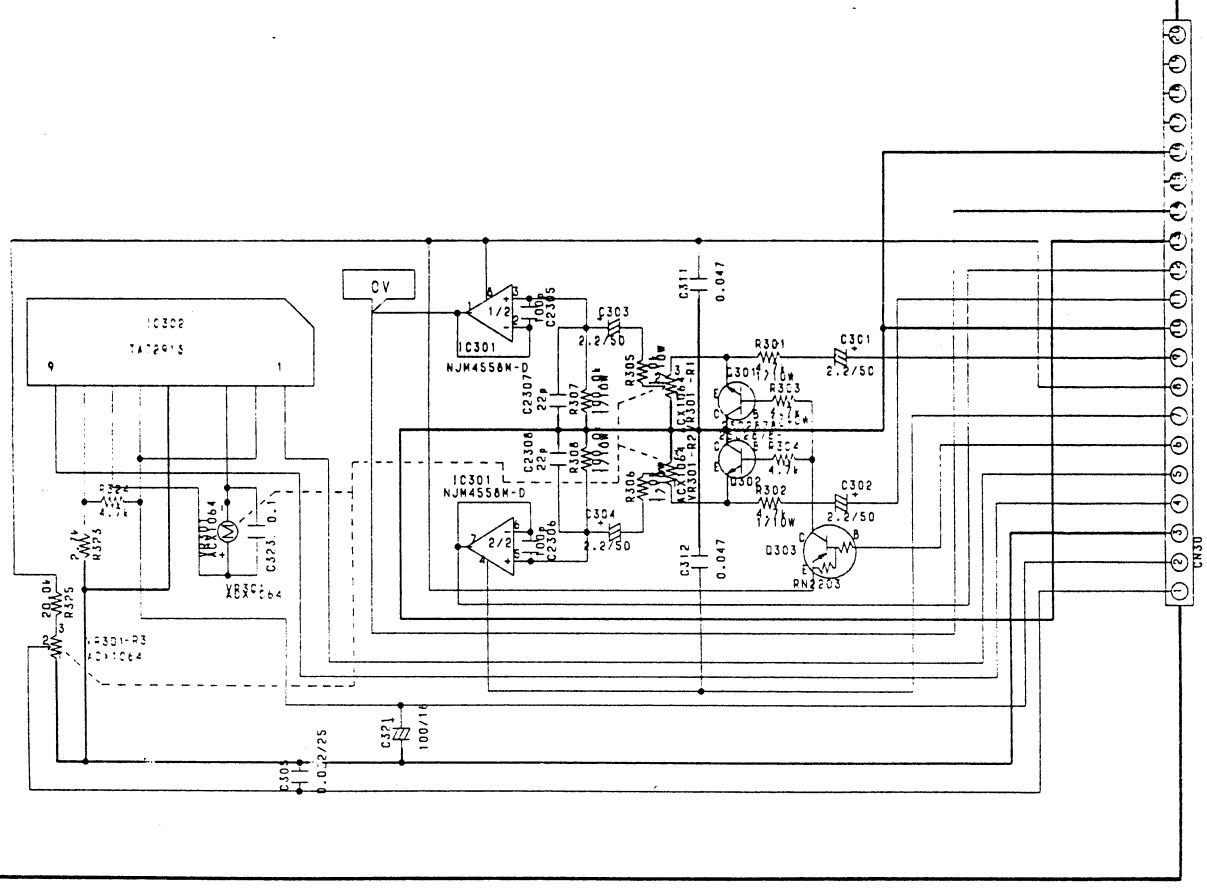

To MAIN Assembly CN29
(To page 71)

IC302 TA7291S

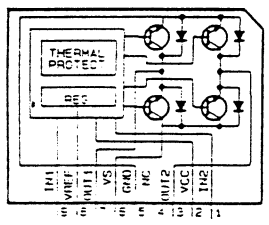

DISPLAY assembly (AWZ3706 : SX-
(AWZ3702 : SX-

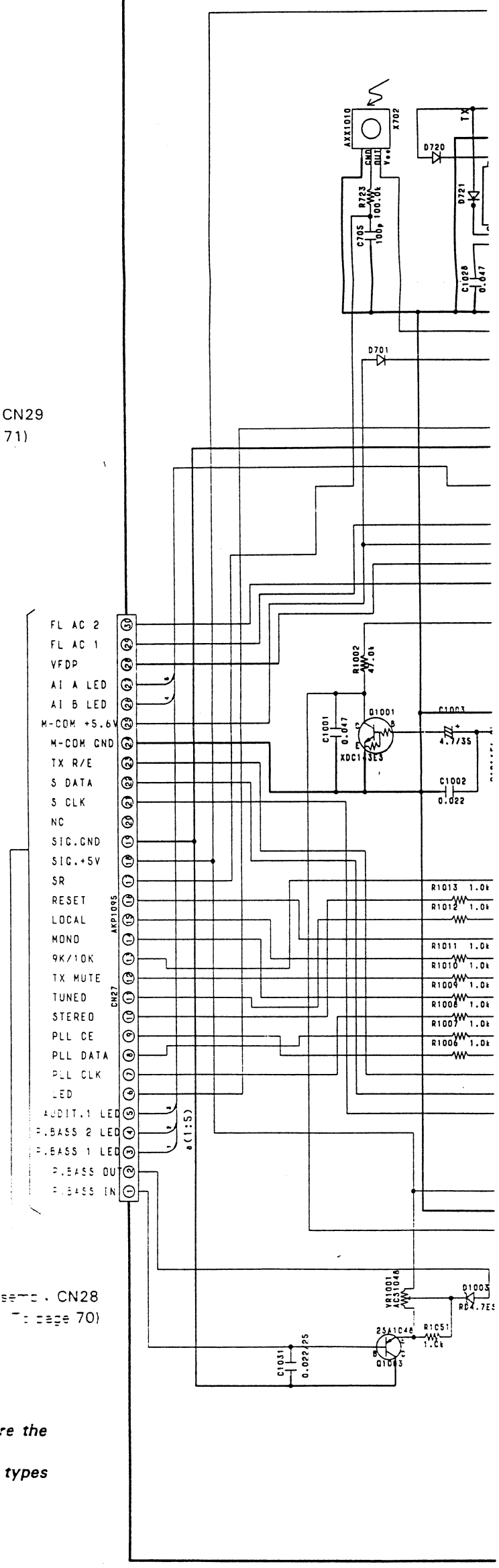

To MAIN Assembly CN28
(To page 70)

NOTE :
The VR assemblies of SX-P920 and SX-P720 types are the same.
The REGULATOR assemblies of SX-P920 and SX-P720 types are the same.

www.manualscenter.com

bly (AWZ3706 : SX – P920)
(AWZ3702 : SX – P720)

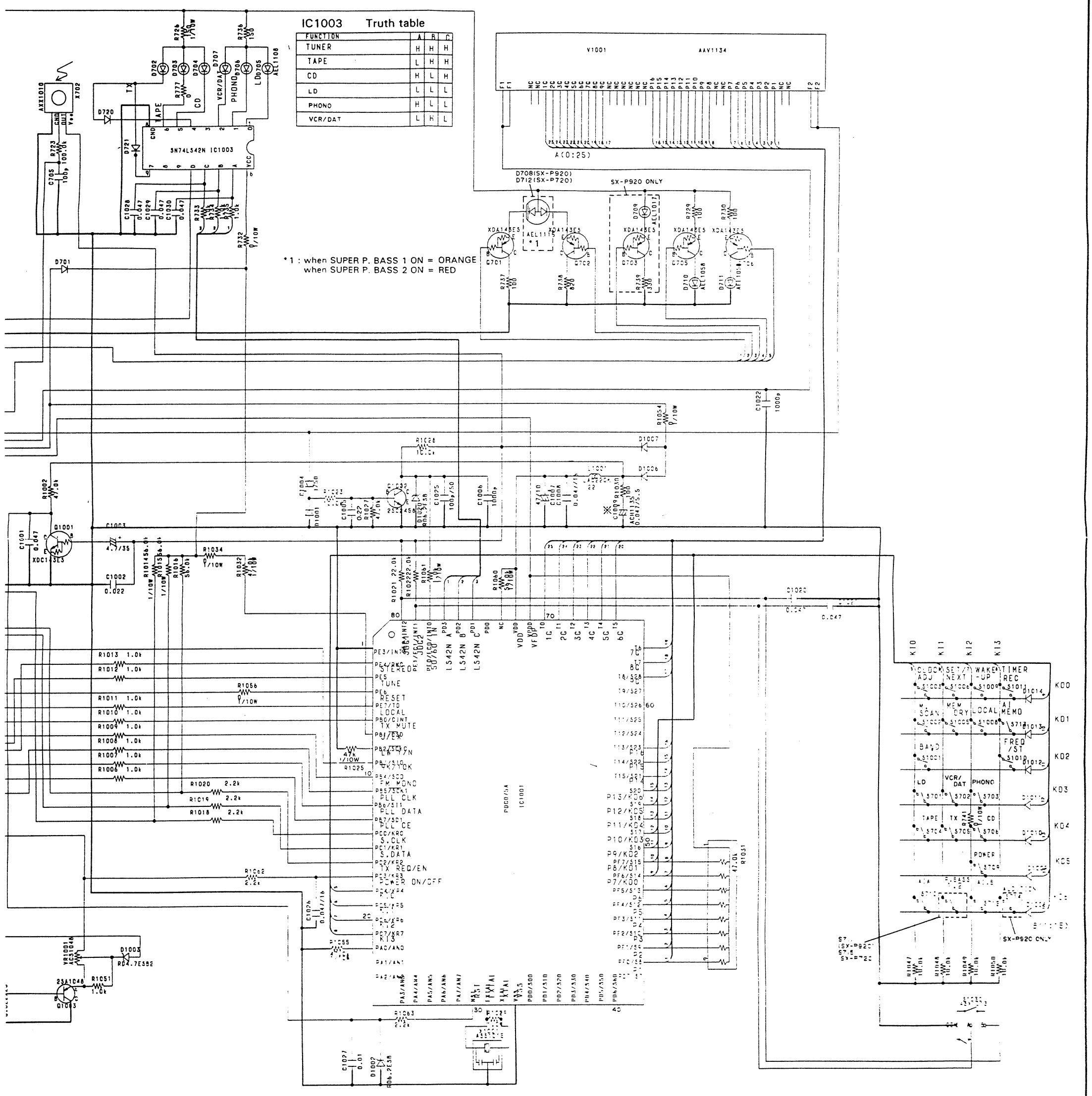

www.manualscenter.com

www.manualscenter.com

9 PANEL FACILITIES

9.1 REAR PANEL FACILITIES

STEREO RECEIVER : SX-P920/SX-P720

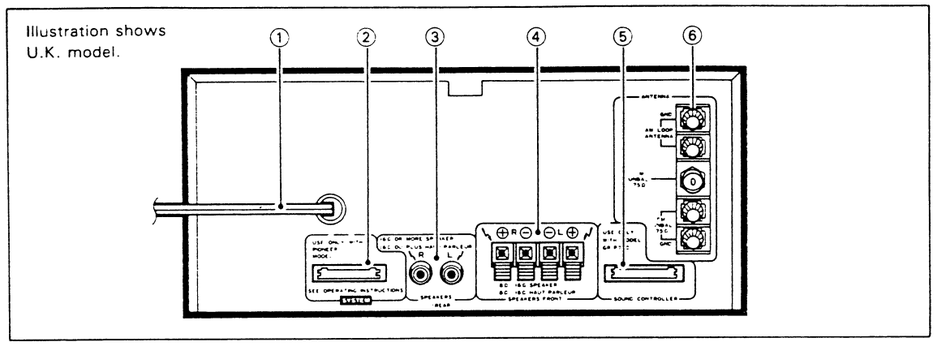

① **Power cord**
Connect this to the AC wall socket.

② **SYSTEM jack**
Connect the system cable here.

③ **SPEAKERS (REAR) jack**
Connect the surround speaker systems.

NOTE:
Connect a speaker system with a nominal impedance of 16Ω or more.

④ **SPEAKERS (FRONT) terminals**
L: Connect the left speaker system as seen from the listening position.
R: Connect the right speaker system as seen from the listening position.

NOTE:
Connect a speaker system with a nominal impedance ranging from 8Ω to 16Ω.

⑤ **SOUND PROCESSOR jack SX-P920**
SOUND CONTROLLER jack SX-P720
Connect the SOUND FIELD PROCESSOR (or SOUND IMAGE CONTROLLER) system cable here.

⑥ **FM/AM ANTENNA terminals**
Antennas must be connected to these terminals: otherwise station reception is not possible. See page 11 for details on ANTENNA CONNECTIONS.

9.2 FRONT PANEL FACILITIES

STEREO RECEIVER : SX-P920

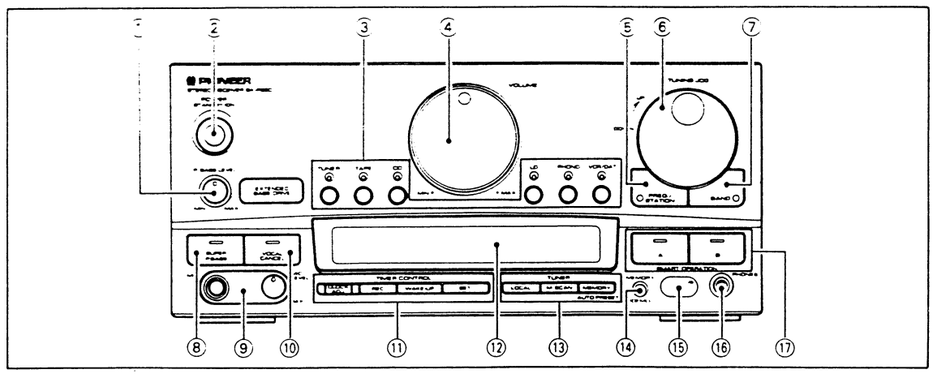

STEREO RECEIVER : SX-P720

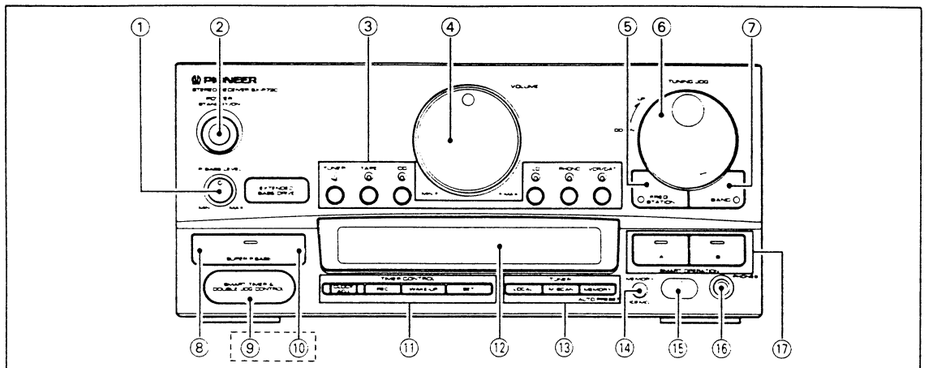

• Multi-voltage models include the ⑨ and ⑩ shown on the SX-P920.

① **P.BASS LEVEL control**
P.BASS stands for Proper Bass Active Supply System, and refers to the built-in system for emphasizing low sound ranges.
This unit is equipped with the Super P.BASS to allow you to select two kinds of bass reproduction, depending on the kind of music source and your own preference. This knob can be used to adjust the super P.BASS level when the SUPER P.BASS button is set to ON.

② **POWER STANDBY/ON switch**
This is the switch for electric power.
ON: When set to the ON position, power is supplied and the unit becomes operational.
STANDBY: When set to the STANDBY position, the main power flow is cut and the unit is no longer fully operational. A minute flow of power feeds the unit to maintain operation readiness.
The receiver section display indicates only the time.

③ **Input selectors**
(TUNER, TAPE, CD, LD, PHONO, VCR/DAT)

④ **VOLUME control**

⑤ **FREQ./STATION button**
Use to select the display mode (frequency mode or station mode).
- **Frequency mode:** Display indicates the frequency of the tuned station, and the current time.
- **Station mode:** Display indicates the frequency of the tuned station together with the recorded station number assigned to that station.

⑥ **TUNING JOG control**
Use to set the time and tune the receiver's reception frequency.

⑦ **BAND button**
Use to select FM or AM bands.

⑧ **SUPER P.BASS button**
Use this button to select from among the two types of super P.BASS effect desired, then use the P.BASS level control to adjust the level as desired.

⑨ **MIC (microphone) jack and MIC LEVEL (microphone level) control [on SX-P920 and SX-P720 (multi-voltage model) only]**

⑩ **VOCAL CANCEL button [on SX-P920 and SX-P720 (multi-voltage model) only]**
Set to ON to use the vocal cancel function.

⑪ **TIMER CONTROL buttons**
(CLOCK ADJ., REC, WAKE-UP, SET)
Use these buttons to set the current clock time and the timer for timed recording and playback.

⑫ **Display**

⑬ **TUNER buttons**
- **LOCAL button:** Set to ON when receiving very nearby stations (the strong signals may otherwise produce high levels of static).
- **M.SCAN (memory scan) button:** Automatically scans (for about five seconds each) each of the stations stored in the station memory.
- **MEMORY button:** Use to save broadcasting stations in the station memory.

⑭ **MEMORY (DEMO) button**
Use in conjunction with the SMART operation memory. If this button is pressed when the unit's power is STANDBY, the DEMO mode will be selected; the power will turn on and the unit's various features will be displayed.

⑮ **Remote sensor window**

⑯ **Headphone jack (PHONES)**

⑰ **SMART OPERATION A/B buttons**
These buttons are used with the SMART operation mode function to store your favorite listening modes, thus allowing you to select them at a single touch.

10. SPE

10.1 SX-

STEREO RE
Amplifier Sec
<For Multi-v
Continuously
per channel,
17,000 Hertz
monic distort

• Measured p
sion's Trac
Claims for

Continuous po
U.K., Europ

Continuous po
U.K., Europ

Multi-voltag
Music power (
U.K., Europ
Multi-voltag
Peak music po
(Multi-voltage
Total harmonic
1 kHz, 25 W,

Electrical Sec
Power requiren
U.K. models
European m
Multi-voltag

Power consum
U.K. models
European m
Multi-voltag
External dimen

10
Weight .....
•• Measured

STEREO RECEIVER : SX-P720

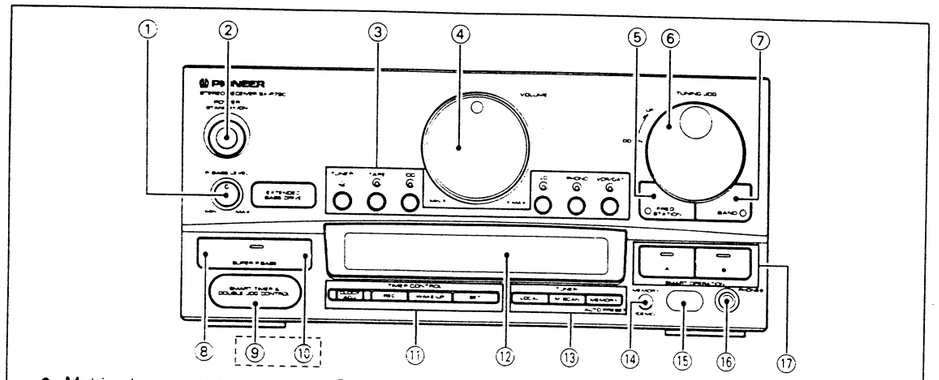

• Multi-voltage models include the ⑨ and ⑩ shown on the SX-P920.

① P.BASS LEVEL control

P.BASS stands for Proper Bass Active Supply System, and refers to the built-in system for emphasizing low sound ranges.

This unit is equipped with the Super P.BASS to allow you to select two kinds of bass reproduction, depending on the kind of music source and your own preference. This knob can be used to adjust the super P.BASS level when the SUPER P.BASS button is set to ON.

② POWER STANDBY/ON switch

This is the switch for electric power.

ON: When set to the ON position, power is supplied and the unit becomes operational.

STANDBY: When set to the STANDBY position, the main power flow is cut and the unit is no longer fully operational. A minute flow of power feeds the unit to maintain operation readiness.

The receiver section display indicates only the time.

③ Input selectors (TUNER, TAPE, CD, LD, PHONO, VCR/DAT)

④ VOLUME control

⑤ FREQ./STATION button

Use to select the display mode (frequency mode or station mode).

- **Frequency mode:** Display indicates the frequency of the tuned station, and the current time.
- **Station mode:** Display indicates the frequency of the tuned station together with the recorded station number assigned to that station.

⑥ TUNING JOG control

Use to set the time and tune the receiver's reception frequency.

⑦ BAND button

Use to select FM or AM bands.

⑧ SUPER P.BASS button

Use this button to select from among the two types of super P.BASS effect desired, then use the P.BASS level control to adjust the level as desired.

⑨ MIC (microphone) jack and MIC LEVEL (microphone level) control [on SX-P920 and SX-P720 (multi-voltage model) only]

⑩ VOCAL CANCEL button [on SX-P920 and SX-P720 (multi-voltage model) only]

Set to ON to use the vocal cancel function.

⑪ TIMER CONTROL buttons (CLOCK ADJ., REC, WAKE-UP, SET)

Use these buttons to set the current clock time and the timer for timed recording and playback.

⑫ Display

⑬ TUNER buttons

- **LOCAL button:** Set to ON when receiving very nearby stations (the strong signals may otherwise produce high levels of static).
- **M.SCAN (memory scan) button:** Automatically scans (for about five seconds each) each of the stations stored in the station memory.
- **MEMORY button:** Use to save broadcasting stations in the station memory.

⑭ MEMORY (DEMO) button

Use in conjunction with the SMART operation memory. If this button is pressed when the unit's power is STANDBY, the DEMO mode will be selected; the power will turn on and the unit's various features will be displayed.

⑮ Remote sensor window

⑯ Headphone jack (PHONES)

⑰ SMART OPERATION A/B buttons

These buttons are used with the SMART operation mode function to store your favorite listening modes, thus allowing you to select them at a single touch.

10. SPECIFICATIONS

10.1 SX-P920

STEREO RECEIVER: SX-P920

Amplifier Section

<For Multi-voltage models>

Continuously Average Power Output is 50 Watts* per channel, min., at 8 ohms from 40 Hertz to 17,000 Hertz, with no more than 0.9% total harmonic distortion

* Measured pursuant to the Federal Trade Commission's Trade Regulation rules on Power Output Claims for Amplifiers

Continuous power output (DIN)
U.K., European models ..... 50 W + 50 W (1 kHz, T.H.D 1%, 8 ohms)
Continuous power output (RMS)
U.K., European models ..... 60 W + 60 W (1 kHz, T.H.D 5%, 8 ohms)
Multi-voltage models ..... 70 W + 70 W
Music power (DIN) (1 kHz, T.H.D 1%, 8 ohms)
U.K., European models ..... 85 W + 85 W
Multi-voltage models ..... 95 W + 95 W
Peak music power
(Multi-voltage models only) ..... 465 W
Total harmonic distortion,
1 kHz, 25 W, 8 ohms 0.2%**

Electrical Section, Other

Power requirements
U.K. models ..... AC 240 V, 50/60 Hz
European models ..... AC 220-230 V, 50/60 Hz
Multi-voltage models ..... AC 110/120–127/220/240 V (switchable), 50/60 Hz
Power consumption
U.K. models ..... 300 W
European models ..... 290 W
Multi-voltage models ..... 325 W
External dimensions .....
260 (W) × 117 (H) × 262 (D) mm
10-1/4 (W) × 4-5/8 (H) × 10-5/16 (D) in
Weight ..... 5.4 kg (11 lb 15 oz.)

** Measured with audio spectrum analyzer.

FM Tuner Section

Reception frequency range ..... 87.5–108.0 MHz
Usable Sensitivity ..... MONO: 12.8 dBf, IHF (1.2 μV/75 ohms)
Sensitivity (DIN)
MONO (S/N 26 dB) ..... 1 μV/75 ohms
STEREO (S/N 46 dB) ..... 50 μV/75 ohms
Signal-to-Noise Ratio
(IHF, 85 dBf Input) ..... MONO: 77 dB
Signal-to-Noise Ratio (DIN) ..... MONO: 66 dB
STEREO: 60 dB
Distortion ..... STEREO: 0.5%, 1 kHz
Antenna input ..... 75 ohms unbalanced

AM (MW) Tuner Section

Frequency range (For U.K., European and multi-voltage models) ..... 531 kHz to 1,602 kHz
(For U.S., Canadian and multi-voltage models) ..... 530 kHz to 1,700 kHz
Sensitivity (IHF, Loop antenna) ..... 350 μV/m
Antenna ..... Loop Antenna

LW Tuner Section
(For LW equipped models only)

Frequency range ..... 153 kHz to 281 kHz
Sensitivity (IHF, Loop Antenna) ..... 1,500 μV/m
Antenna ..... Loop Antenna

10.2 SX-P720

STEREO RECEIVER: SX-P720

Amplifier Section

<For U.S., Canadian and Multi-voltage models>
Continuously Average Power Output is 40 Watts* per channel, min., at 8 ohms from 40 Hertz to 20,000 Hertz, with no more than 0.9% total harmonic distortion

> * Measured pursuant to the Federal Trade Commission's Trade Regulation rules on Power Output Claims for Amplifiers

Continuous power output (DIN)
U.K., European models ..... 40 W +40 W
(1 kHz, T.H.D 1%, 8 ohms)
Continuous power output (RMS)
U.K., European models ..... 50 W +50 W
(1 kHz, T.H.D 5%, 8 ohms)
U.S., Canadian and
Multi-voltage models ..... 57 W +57 W
Music power (DIN) (1 kHz, T.H.D 1%, 8 ohms)
U.K., European models ..... 65 W +65 W
Multi-voltage models ..... 75 W +75 W
Peak music power
(Multi-voltage models only) ..... 375 W
Total harmonic distortion,
1 kHz, 20 W, 8 ohms 0.2%**

Electrical Section, Other

Power requirements
U.K. models ..... AC 240 V, 50/60 Hz
European models ..... AC 220-230 V, 50/60 Hz
U.S., Canadian models ..... AC 120 V, 60 Hz
Multi-voltage models ..... AC 110/120–127/
220/240 V (switchable), 50/60 Hz
Power consumption
U.K. models ..... 250 W
European models ..... 240 W
U.S., Canadian models ..... 125 W
Multi-voltage models..... 265 W
External dimensions .....
260 (W) × 117 (H) × 262 (D) mm
10-1/4 (W) × 4-5/8 (H) × 10-5/16 (D) in
Weight ..... 5.2 kg (11 lb 7 oz.)

** Measured with audio spectrum analyzer.

FM Tuner Section

Reception frequency range ..... 87.5–108.0 MHz
Usable Sensitivity ..... MONO: 12.8 dBf, IHF
(1.2 μV/75 ohms)
Sensitivity (DIN)
MONO (S/N 26 dB) ..... 1 μV/75 ohms
STEREO (S/N 46 dB) ..... 50 μV/75 ohms
Signal-to-Noise Ratio
(IHF, 85 dBf Input) ..... MONO: 77 dB
Signal-to-Noise Ratio (DIN) ..... MONO: 66 dB
STEREO: 60 dB
Distortion ..... STEREO: 0.5%, 1 kHz
Antenna input ..... 75 ohms unbalanced

AM (MW) Tuner Section

Frequency range (For U.K., European and multi-voltage models) ..... 531 kHz to 1,602 kHz
(For U.S., Canadian and
multi-voltage models) ..... 530 kHz to 1,700 kHz
Sensitivity (IHF, Loop antenna) ..... 350 μV/m
Antenna ..... Loop Antenna

LW Tuner Section
(For LW equipped models only)

Frequency range ..... 153 kHz to 281 kHz
Sensitivity (IHF, Loop Antenna) ..... 1,500 μV/m
Antenna ..... Loop Antenna

www.manualscenter.com