HCD-H701

SERVICE MANUAL

Canadian Model
AEP Model
UK Model
E Model
Australian Model

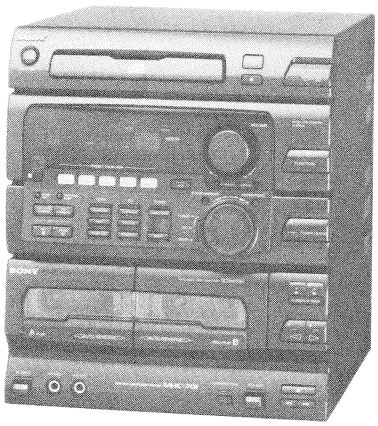

HCD-H701 is the CD player and stereo deck receiver in FH-G70/ MHC-701/MHC-S300.

Dolby noise reduction manufactured under license from Dolby Laboratories Licensing Corporation.
"DOLBY" and the double-D symbol DD are trademarks of Dolby Laboratories Licensing Corporation.

CD SECTION	Model Name Using Similar Mechanism	HCD-H801
	CD Mechanism Type	CDM28-5BD19
	Base Unit Type	BU-5BD19
TAPE DECK SECTION	Model Name Using Similar Mechanism	HCD-H801
	Tape Transport Mechanism Type	TCM-220WR2

SPECIFICATIONS

CD player section

System: Compact disc digital audio system
Laser: Semiconductor laser
Wavelength: 780 – 790 nm
Frequency response: 2 Hz – 20 kHz

Tuner section

FM stereo, FM/AM superheterodyne tuner

FM tuner section

Tuning range
EXCEPT CIS, EE model: 87.5 – 108.0 MHz
CIS, EE model: 65.0 – 74.0 MHz
87.5 – 108.0 MHz
Aerial: FM lead aerial
Aerial terminals: 75 ohm unbalanced
Intermediate frequency: 10.7 MHz

AM tuner section

Tuning range
CND model: AM 530 – 1,710 kHz
AEP, UK, CIS, EE model: MW 531 – 1,602 kHz
LW 153 – 279 kHz
G model: AM 531 – 1,602 kHz
IT model: AM 522 – 1,611 kHz
AUS model: MW 531 – 1,602 kHz
SW 5.95 – 17.9 MHz
E, EA, MX, MY, SP, HK, AR model:
MW 531 – 1,602 kHz (at 9 kHz step)
MW 530 – 1,710 kHz (at 10 kHz step)
SW 5.95 – 17.9 MHz
Aerial: AM loop aerial
External aerial terminals
Intermediate frequency: 450 kHz

Tape player section

Recording system: 4-track 2-channel stereo
Frequency response
(DOLBY NR OFF)
40 – 13,000 Hz (±3 dB), using Sony TYPE I cassette
40 – 14,000 Hz (±3 dB), using Sony TYPE II cassette
Wow and flutter: 0.1% WRMS ±0.3% (DIN)

Amplifier section

Peak music power output: 600 W
Continuous RMS power output: 45 W + 45 W (6 ohms at 1 kHz, 5% THD)
Inputs
MIX MIC: Sensitivity 1 mV, impedance 600 ohms
AUX IN: Sensitivity 450 mV, impedance 47 kilohms
Outputs
PHONES (phone jack): accept headphones of 8 ohms or more.
SPEAKER: accept impedance of 6 to 16 ohms.

— Continued on next page —

MINI Hi-Fi COMPONENT SYSTEM

SONY®

MICROFILM

www.manualscenter.com

Supplied accessories
AM loop aerial (1)
Remote (1)
Sony SUM-3 (NS) batteries (2)
FM lead aerial (1)
Speaker cables (2)

General
Power requirement
CND model: 120 V AC, 50/60 Hz
AEP, CIS, EE, G, IT model: 220-230 V AC, 50/60 Hz
UK model: 240 V AC, 50 Hz
AUS model: 220-240 V AC, 50 Hz
Other model: 110-120 V/220-240 V AC, 50/60 Hz
Adjusting with the voltage selector
Power consumption
CND, AEP, UK, G, IT, EE, CIS model: 100W
E, EA, MY, SP, MX, AR, HK, AUS model: 125 W

Dimensions	Approx. 280 × 325 × 335 mm (w/h/d) incl. projecting parts and controls
Mass	Approx. 7.6 kg

Design and specifications are subject to change without notice.

- Abbreviation

CND:	Canadian	SP:	Singapore
MX:	Mexican	AR:	Argentine
EE:	East European	HK:	Hong Kong
G:	German	MY:	Malaysia
IT:	Italian	AUS:	Australian
EA:	Saudi Arabia		

NOTE:
- AE1, UK1: Tuner sections FM IF AMP become transistor.
- AE2, UK2: Tuner sections FM IF AMP become IC.
- E2: Tuner sections SW BAND do not exist.
- E3: Tuner sections SW BAND exist.

Laser component in this product is capable of emitting radiation exceeding the limit for Class 1.

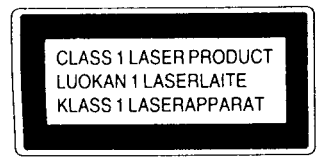

This appliance is classified as a CLASS 1 LASER product. The CLASS 1 LASER PRODUCT MARKING is located on the rear exterior.

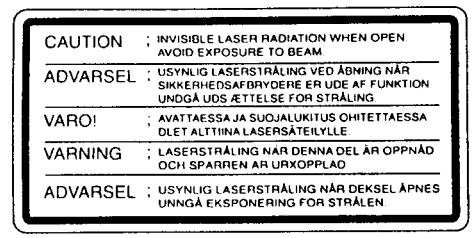

This caution label is located inside the unit.

CAUTION

Use of controls or adjustments or performance of procedures other than those specified herein may result in hazardous radiation exposure.

SAFETY-RELATED COMPONENT WARNING!!

COMPONENTS IDENTIFIED BY MARK ⚠ OR DOTTED LINE WITH MARK ⚠ ON THE SCHEMATIC DIAGRAMS AND IN THE PARTS LIST ARE CRITICAL TO SAFE OPERATION. REPLACE THESE COMPONENTS WITH SONY PARTS WHOSE PART NUMBERS APPEAR AS SHOWN IN THIS MANUAL OR IN SUPPLEMENTS PUBLISHED BY SONY.

ATTENTION AU COMPOSANT AYANT RAPPORT À LA SÉCURITÉ!

LES COMPOSANTS IDENTIFIÉS PAR UNE MARQUE ⚠ SUR LES DIAGRAMMES SCHÉMATIQUES ET LA LISTE DES PIÈCES SONT CRITIQUES POUR LA SÉCURITÉ DE FONCTIONNEMENT. NE REMPLACER CES COMPOSANTS QUE PAR DES PIÈCES SONY DONT LES NUMÉROS SONT DONNÉS DANS CE MANUEL OU DANS LES SUPPLÉMENTS PUBLIÉS PAR SONY.

TABLE OF CONTENTS

Section	Title	Page
	Specifications	1
	Model Identification	3
	Servicing Note	4
1.	**GENERAL**	
	Index to Parts and Controls	4
2.	**DISASSEMBLY**	6
3.	**MECHANICAL ADJUSTMENTS**	9
4.	**ELECTRICAL ADJUSTMENTS**	
	Deck Section	9
	Tuner Section	12
	CD Section	13
5.	**DIAGRAMS**	
5-1.	CD Section Block Diagram	15
5-2.	Other Section Block Diagram	17
5-3.	Main Section Printed Wiring Boards	22
5-4.	Main Section Schematic Diagram	27
5-5.	Main Board Printed Wiring Board and Schematic Diagram (CND, E, EA, AR, HK, MX, MY, SP, AUS)	32
5-6.	CD Section Schematic Diagram	34
5-7.	CD Section Printed Wiring Board	37
5-8.	Polar Board Printed Wiring Board and Schematic Diagram	41
5-9.	Tape Section Printed Wiring Boards	43
5-10.	Tape Section Schematic Diagram	45
5-11.	Panel Section Schematic Diagram	48
5-12.	Panel Section Printed Wiring Boards	51
5-13.	IC Pin Function	59
6.	**EXPLODED VIEWS**	63
7.	**ELECTRICAL PARTS LIST**	71

MODEL IDENTIFICATION

– Specification Label –

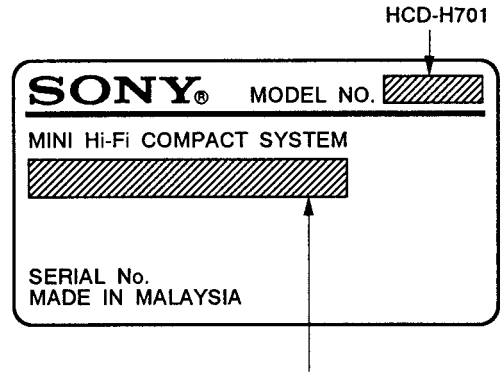

CND model: AC 120 V 50/60 Hz 100 W
MX model: AC 120 V 50/60 Hz 125 W
AEP, CIS, EE, G, IT model:
AC 220 – 230 V 50/60 Hz 100 W
UK model: AC 240 V 50 Hz 100 W
E, EA, SP, AR, HK model:
AC 110 – 120/220 – 240 V 50/60 Hz 125 W
MY, AUS model: AC 220 – 240 V 50 Hz 125 W

- Abbreviation

CND:	Canadian	SP:	Singapore
MX:	Mexican	AR:	Argentine
EE:	East European	HK:	Hong Kong
G:	German	MY:	Malaysia
IT:	Italian	AUS:	Australian
EA:	Saudi Arabia		

www.manualscenter.com

SERVICING NOTE

NOTES ON HANDLING THE OPTICAL PICK-UP BLOCK OR BASE UNIT

The laser diode in the optical pick-up block may suffer electrostatic breakdown because of the potential difference generated by the charged electrostatic load, etc. on clothing and the human body.
During repair, pay attention to electrostatic breakdown and also use the procedure in the printed matter which is included in the repair parts.
The flexible board is easily damaged and should be handled with care.

NOTES ON LASER DIODE EMISSION CHECK

The laser beam on this model is concentrated so as to be focused on the disc reflective surface by the objective lens in the optical pick-up block. Therefore, when checking the laser diode emission, observe from more than 30 cm away from the objective lens.

LASER DIODE AND FOCUS SEARCH OPERATION CHECK

1. Make POWER switch on with no disc inserted and disc table closed.
2. Confirm that the following operation is performed while observing the objective lems.

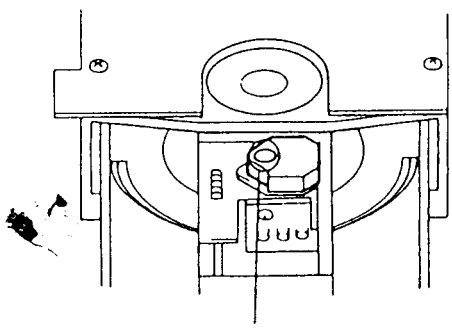

❶ Confirm that laser beam is spread.
❷ UP and downmotion of the objective lens. (3 times)

SECTION 1
GENERAL

Index to Parts and Controls

Refer to the pages indicated in parentheses for how to use the controls.
Controls with an asterisk have indicators on themselves.

Front Panel

CD player

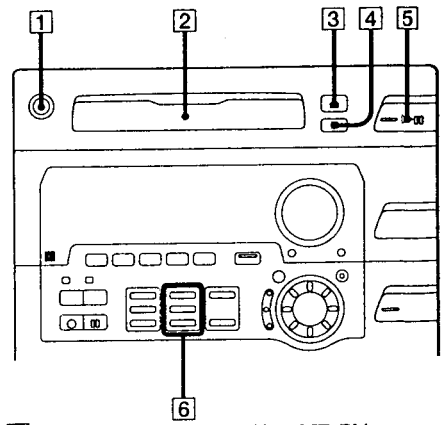

1 SYSTEM POWER ON/STAND BY switch (7)
2 CD tray (7)
3 ≜ OPEN / CLOSE button (7)
4 ■ (stop) button (7)
5 ▷II (play and pause) button* (7)
6 CD operating buttons
CONTINUE button (8)
SHUFFLE button (8)
PROGRAM button (8)

Tuner/Amplifier

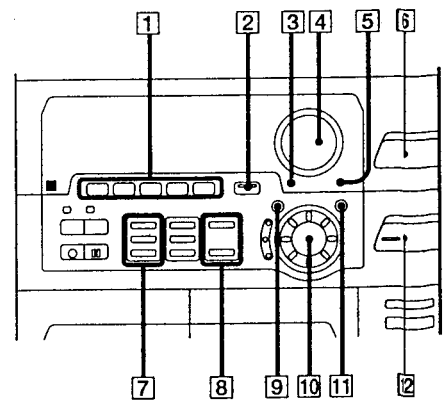

1 Preset equalizer setting buttons* (17)
2 DBFB button (17)
3 CLOCK SET button (6)
4 VOLUME control (17,18)
5 DISPLAY button (6,7)
6 FUNCTION button (8,14,16,20)

This section is extracted from instruction manual.

→ continued

7 Timer operating buttons
- TIMER SET button (18)
- DAILY button (18)
- TIMER REC button (19)

8 Tuner operating buttons
- TUNING MODE button (10,19)
- MONO button (10)

9 TUNER MEMORY button (11)
10 Jog dial (6,7,10,14,18)
11 ENTER/NEXT button* (6,11,18)
12 TUNER/BAND button* (10,15,19)

Tape player

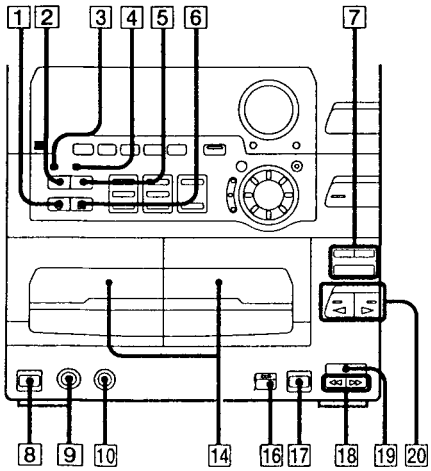

1 ● REC button* (13)
2 HIGH SPEED DUBBING button (16)
3 DOLBY NR button (12)
4 DIRECTION MODE button (12)
5 CD SYNCHRO button (13)
6 ❚❚ PAUSE button* (12)
7 DECK A/DECK B button and A/B lamps (12)
8 ⏏ EJECT button (for deck A) (12)
9 PHONES jack (17)
10 MIX MIC
14 Tape compartments (12)
16 KARAOKE PON/MPX button (20)
17 ⏏ EJECT button (for deck B) (12)
18 ►► (fast rightward) (12)
◄◄ (fast leftward) buttons (12)
19 ■ (stop play) button (12)
20 ▷ (front side play)* (12)
◁ (reverse side play) buttons* (12)

Rear panel

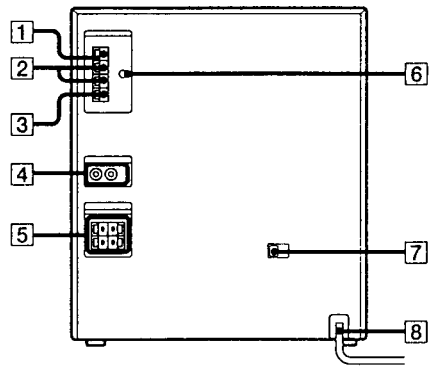

1 FM 75Ω terminal (4)
2 ⏚ earth terminals (4)
3 AM terminal (4)
4 AUX IN jacks (20)
5 SPEAKER connectors (4)
6 ⏚ ground terminal (4)
7 VOLTAGE SELECTOR (4)*
8 Mains lead (5)

* for E, EA, SP, AR, HK models

Display window

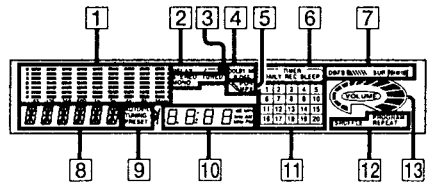

1 Spectrum analyzer (17)
2 Tape direction indications (12)
3 Tuner indications (10)
4 DOLBY NR indication (12)
5 Karaoke indication (20)
6 TIMER/DAILY/REC/ SLEEP indication (18,19)
7 DBFB/SUR indications (17)
8 Function indication (8,14,16,20)
9 AUTO/TUNING/PRESET/STEP indications (10,11,19)
10 Frequency/time indication (6,10)
11 Music calendar (7)
12 CD play mode indications (8,9)
13 VOLUME indication (17)

Remote (RM-S33)

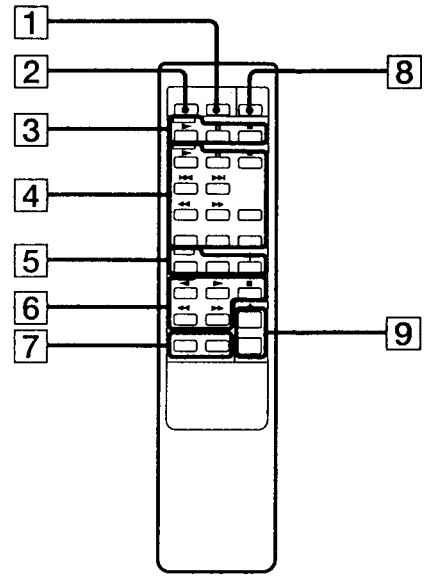

1 SLEEP button (18)
2 FUNCTION button (8,14,16,20)
3 MD operating buttons
- ► (play) button
- ❚❚ (pause) button
- ■ (stop play) button

4 CD operating buttons
- ► (play) button (7)
- ❚❚ (pause) button (7)
- ■ (stop play) button (7)
- ⏮/⏭ (AMS) buttons(7)
- ◄◄/►► (fast forward/fast reverse) buttons (7)
- REPEAT button (9)
- EDIT button (14)
- CHECK button (8,14)
- CLEAR button (8)

5 Tuner operating buttons
- BAND button (10,15,19)
- PRESET (+/–) buttons (11)

6 Tape operating buttons
- ◄/► buttons (12)
- ■ button (12)
- ◄◄/►► buttons (12)

7 TAPE A/B buttons (12)
8 SYSTEM POWER button (7)
9 VOL(+/–) buttons (17,18)

SECTION 2
DISASSEMBLY

Note: Follow the disassembly procedure in the numerical order given.

CASE

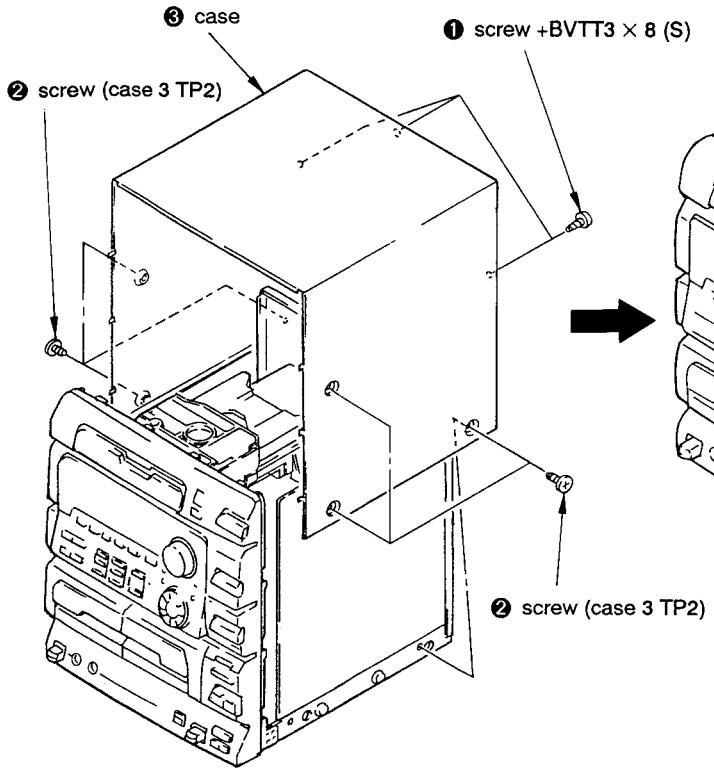

MAIN BOARD

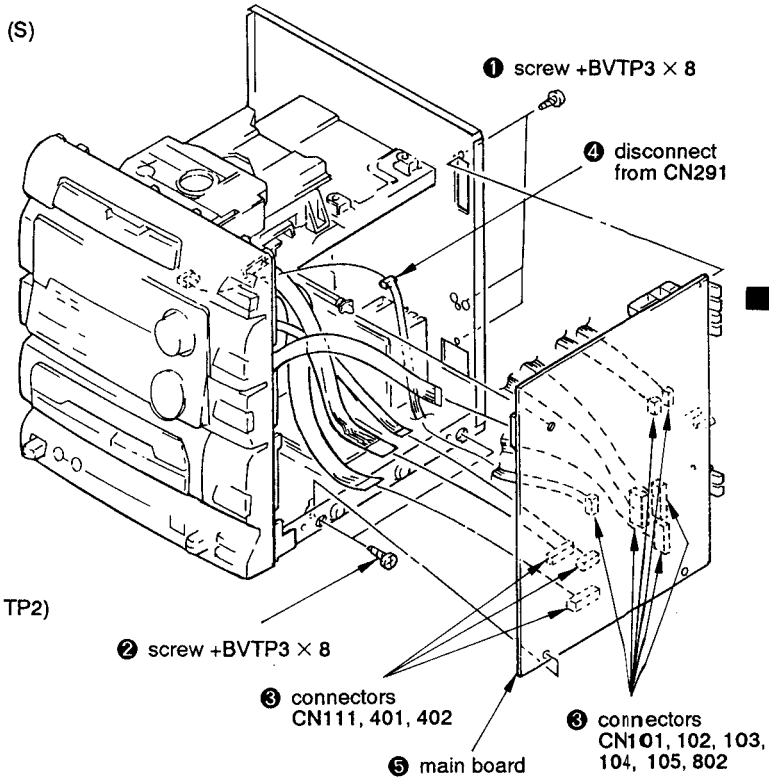

POWER BOARD

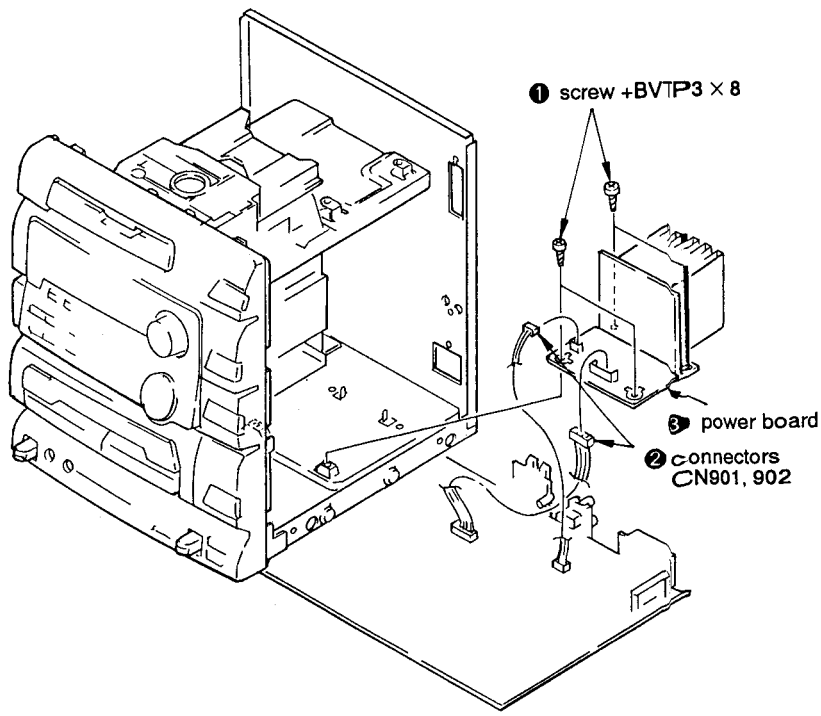

www.manualscenter.com

CD MECHANISM DECK (CDM28-5BD19)

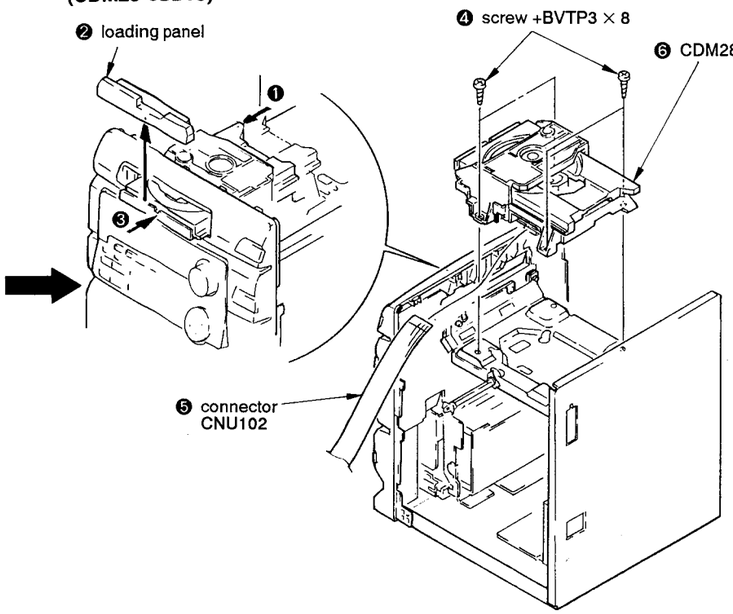

• How to open the disc tray when power switch turns off.

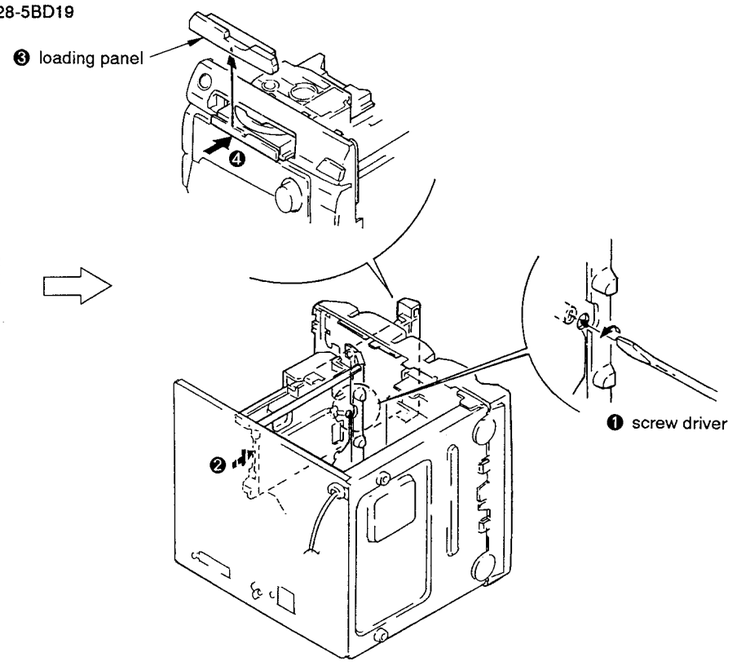

TC MECHANISM DECK (TCM-220WR2), HP BOARD, TC SW BOARD, KARAOKE SW BOARD

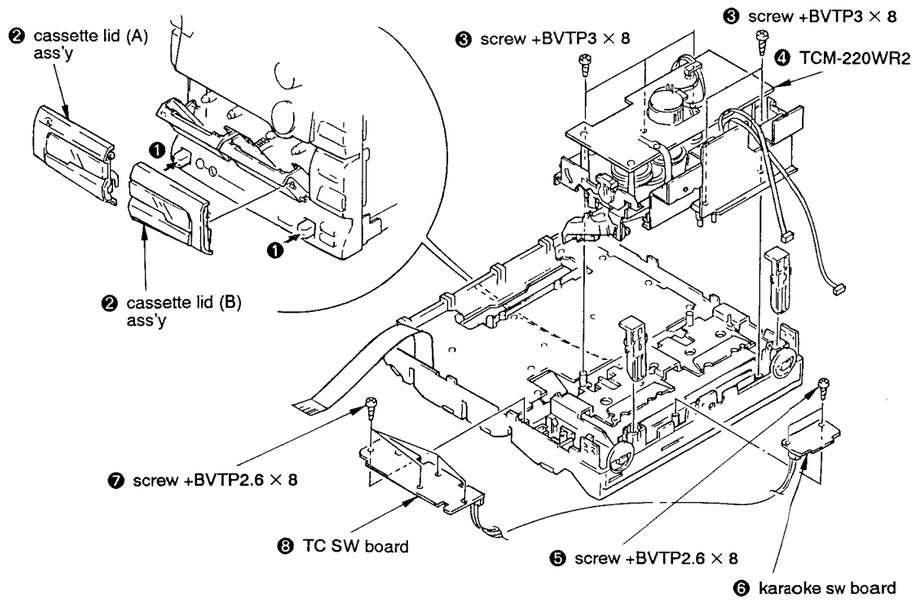

CHASSIS (CDM), POWER TRANSFORMER

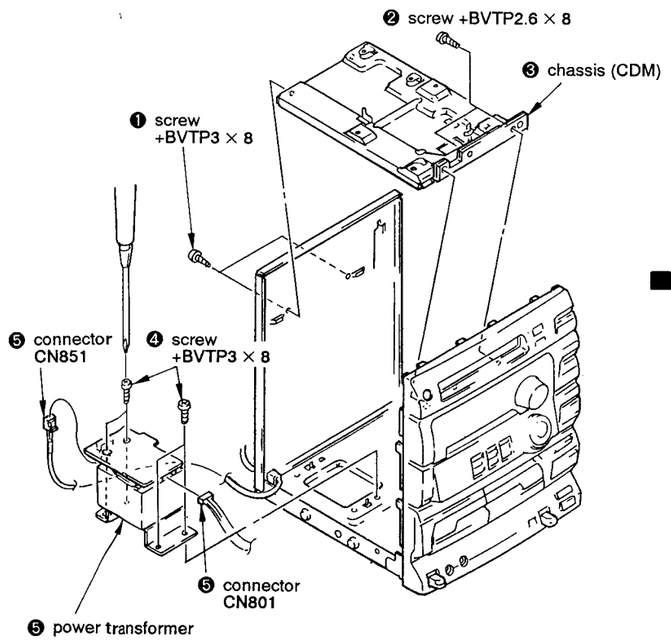

CHASSIS

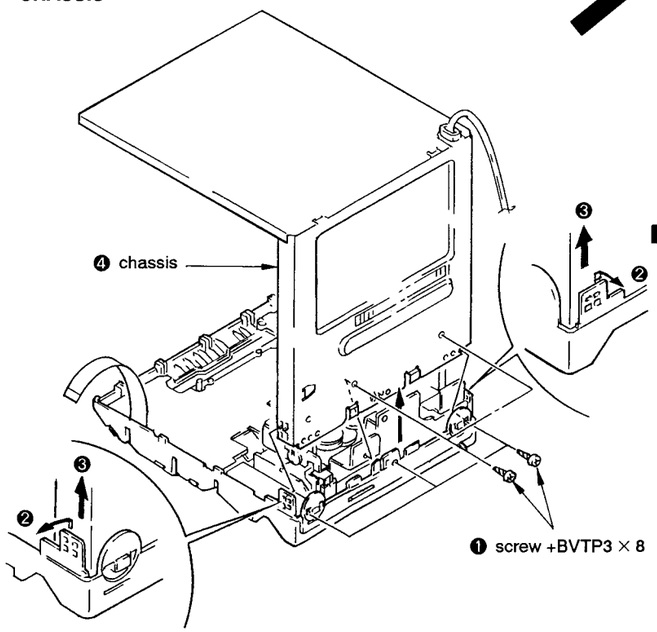

PANEL BOARD

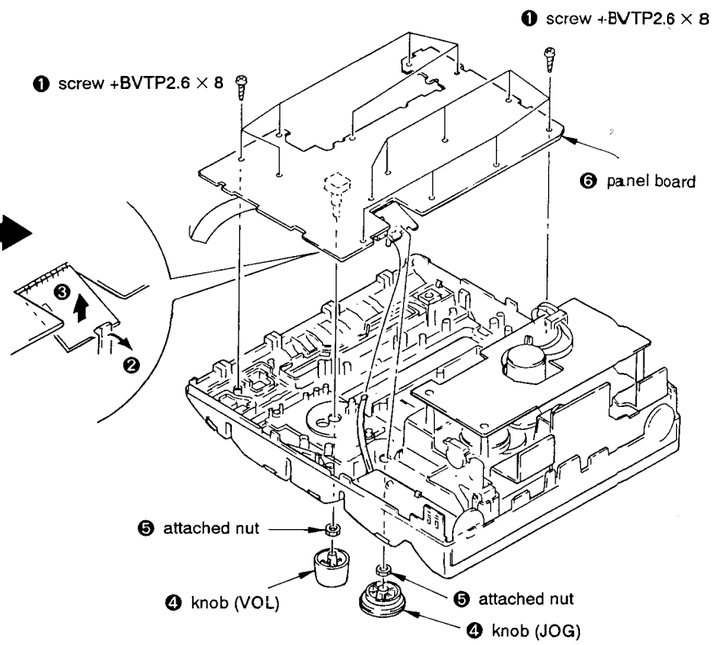

SECTION 3
MECHANICAL ADJUSTMENTS

PRECAUTION

1. Clean the following parts with a denatured-alcohol-moistened swab :
   record/playback head pinch roller
   erase head rubber belts
   capstan idlers
2. Demagnetize the record/playback head with a head demagnetizer.
3. Do not use a magnetized screwdriver for the adjustments.
4. After the adjustments, apply suitable locking compound to the parts adjusted.
5. The adjustments should be performed with the rated power supply voltage unless otherwise noted.

• Torque Measurement

Mode	Torque Meter	Meter Reading
Forward	CQ-102C	36 to 61g•cm (0.50 – 0.84 oz•inch)
Forward Back Tension	CQ-102C	2 to 6g•cm (0.026 – 0.082 oz•inch)
Reverse	CQ-102RC	36 to 61g•cm (0.50 – 0.84 oz•inch)
Reverse Back Tension	CQ-102RC	2 to 6g•cm (0.026 – 0.082 oz•inch)
FF, REW	CQ-201B	61 to 143g•cm (0.85 – 1.98 oz•inch)

• Tape Tension Measurement

Mode	Tension Meter	Meter Reading
Forward	CQ-403A	more than 1kg (35.2 oz)
Reverse	CQ-403R	more than 1kg (35.2 oz)

SECTION 4
ELECTRICAL ADJUSTMENTS

DECK SECTION

1. The adjustment should be performed in the publication. (Be sure to make playback adjustment at first.)
2. The adjustment and measurement should be performed for both L-CH and R-CH.
   - Switch position
     DOLBY NR switch : OFF
     FUNCTION button : CD
3. Deck section electrical adjustments are made in test mode by pressing TUNER/BAND, DISPLAY, and JAZZ at the same time.
4. Input point and output level measurement point.

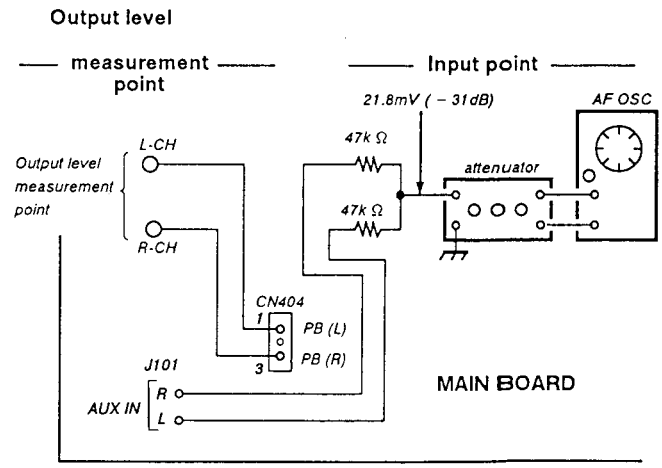

• Test Tape

Tape	Contents	Use
P-4-A100	10kHz, – 10dB	Head Azimuth Adjustment
P-4-L300	315Hz, 0dB	Level Adjustment
WS-48B	3kHz, 0dB	Tape Speed Adjustment

0 dB=0.775V

Record/Playback Head Azimuth Adjustment

DECK A **DECD B**

Procedure :

1. Forward Playback mode
   Reverse Playback mode

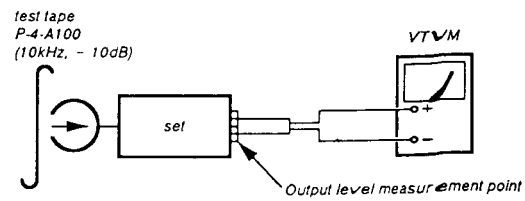

2. Turn the adjustment screw for the maximum output levels.If these levels do not match,turn the adjustment screw until both of output levels match together within 1dB.

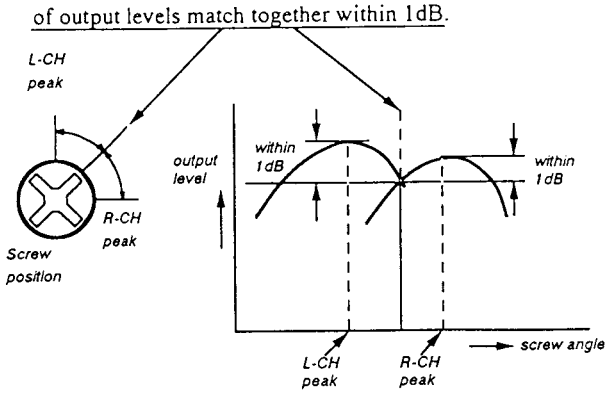

3. Playback Mode

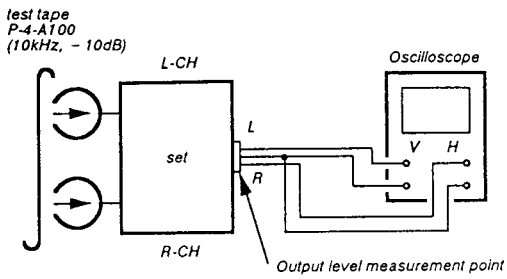

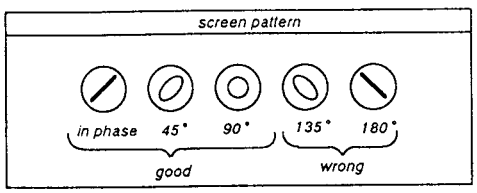

4. Change the review playback mode and repeat the steps 1 to 3.
5. After the adjustment, lock the adjustment screw with suitable locking compound.

Adjustment Location :

– record/playback head (Deck A and B)

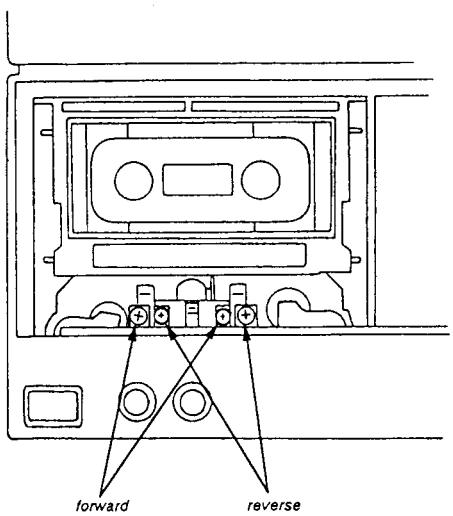

Tape Speed Adjustment DECK A DECK B

Procedure :

- Perform high speed adjustment before normal speed adjustment.

  Mode : Playback

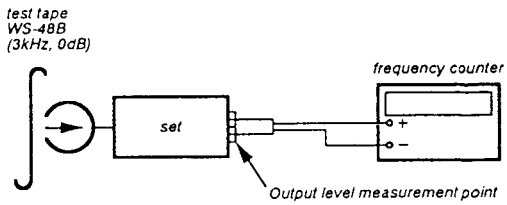

Speed	Deck	Adjustment	Frequency counter
※ High	A	RV652	5,970 to 6,030Hz
	B	RV652	
Normal	A	RV651	2,985 to 3,015Hz
	B	RV651	

∗ Continue to press HIGH SPEED DUBBING switch (S3019) in playback mode : High speed playback.

Frequency difference between the begining and the end of the tape should be within ± 3%.
Frequency difference between deck A and deck B the biginning of the tape should be within 1.5%.

Adjustment Location : AUDIO board.

Playback Level Adjustment DECK A DECK B

Procedure :

Mode : Playback

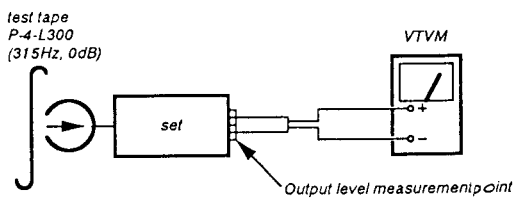

Deck A is RV311(L-CH) and RV411(R-CH), deck B is RV301 (L-CH) and RV401 (R-CH) so that adjustment within adjustment level as follows.

Adjustment Level :

LINE OUT level : – 7.9 ± 0.5dB (0.29 to 0.33V)
Level Difference between Channels : within 0.5dB

Confirm the DOLBY OUT level does not change in playback mode while changing the mode from playback to stop several times.

Adjustment Location : AUDIO board.

Record Bias Adjustment DECK B

Procedure :

1. Record mode

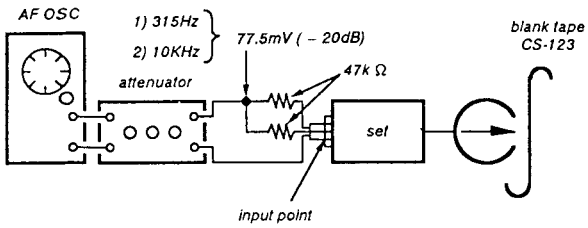

2. Playback mode

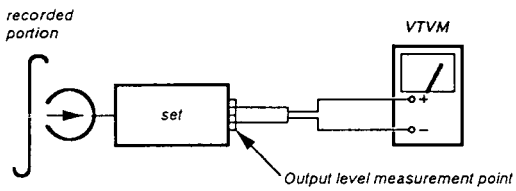

3. Confirm playback the signal recorded in step 1 become adjustment level as follows.
4. If these levels do not adjustment level, adjustment the RV341 (L-CH) and RV441 (R-CH) to repeat step 1 and 4.

Adjustment level : Playback output of 315Hz to playback output of 10kHz : – 0.5dB to 0.5dB.

Adjustment Location : AUDIO board.

Record Level Adjustment DECK B

FUNCTION button : CD

Procedure :

1. Record mode

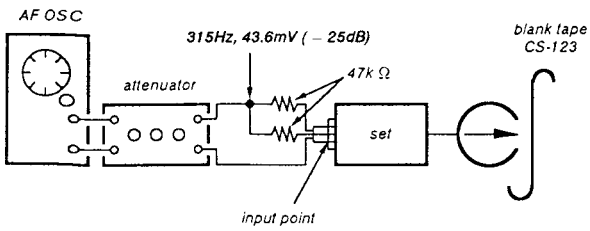

2. Playback mode

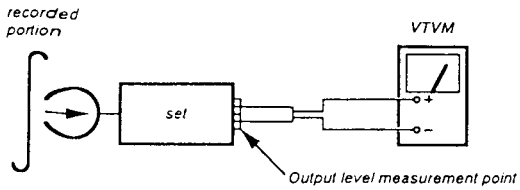

3. Confirm playback the signal recorded in step become adjustment level as follows.
4. If these levels do not adjustment level, adjustment the RV401 (L-CH) and RV451 (R-CH) to repeat step 1 and 4.

Adjustment Level :
DOLBY OUT level : – 25dB ± 0.5dB (41.1 to 46.1mV)

Adjustment Location : MAIN board

【AUDIO BOARD】 – Component side –

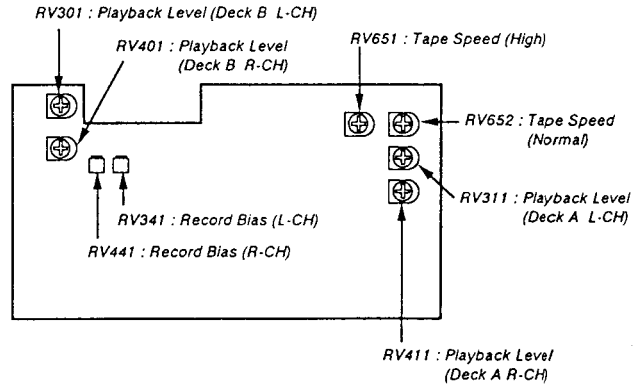

【MAIN BOARD】 – Component side –

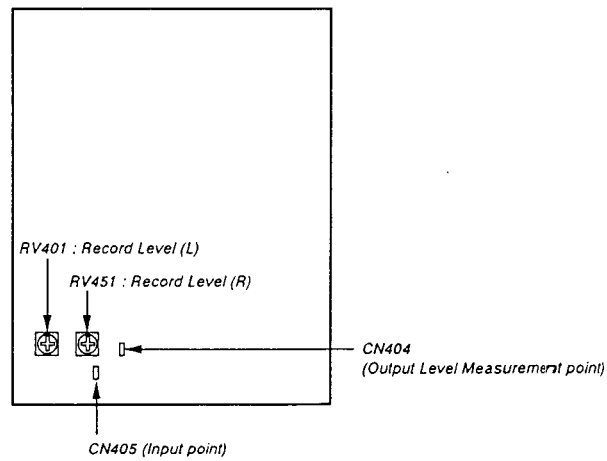

www.manualscenter.com

TUNER SECTION

Note. 1 : The adjustment should be performed in the publication. (AM → FM → SW)

Note. 2 : As a front-end (FE1) is difficult to repair if faulty, replace it with new one.

AM Section Adjustment

Setting :

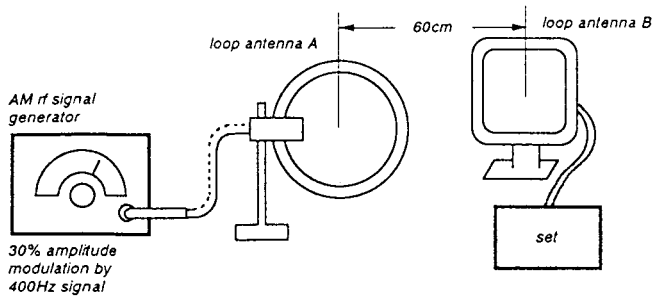

FM Section Adjustment

Setting :

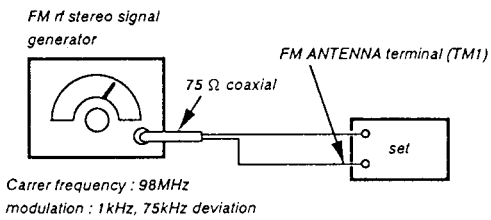

AM Tuned Indication Lighting Level Adjustment

Band : MW

Procedure :

1. Set loop antenna A so that the loop antenna B input level becomes 0.56mV (55dB μ).
2. Tune the set to 999kHz.
3. Adjust RV41 so that the TUNED light up.
4. Confirm that the TUNED light off with AM RF SG output level set at 0dBμ .
5. Confirm the FM tuned indication lighting level and adjust if necessary.

Adjustment Location : Main board

FM Tuned Indication Lighting Level Adjustment

Band : FM

Procedure :

1. Supply a 22.4μV (27dBμ) 98MHz signal from the ANTNNA terminal.
2. Tune the set to 98MHz.
3. Adjust RV42 so that the TUNED light up.
4. Confirm that the TUNED light off with FM RF signal generator output level set at 16dBμ .

Adjustment Location : Main board

SW OSC Voltage Adjustment

Band : SW

(E3, Saudi Arabia, Hong Kong, Malaysia, Singapore model)

Procedure :

1. Connecct the VOM to JW376 (OSC)
2. Tune the set to 5.95MHz.
3. Adjust T2 for 1.0 to 1.1V reading on the VOM.
4. Tune the set to 17.90MHz.
5. Adjust CV2 for 8.4 to 8.6V reading on the VOM.

SW Tracking Adjustment

Band : SW

Procedure :

1. Connect the VOM to speaker terminal. (TB101)
2. Adjust for a maximum reading on VOM.

Signal generator and set frequency	Adjustment part
7.0 MHZ	T1
17.0 MHZ	CV1

Adjustment Location : Main board

[MAIN BOARD] – Component side –

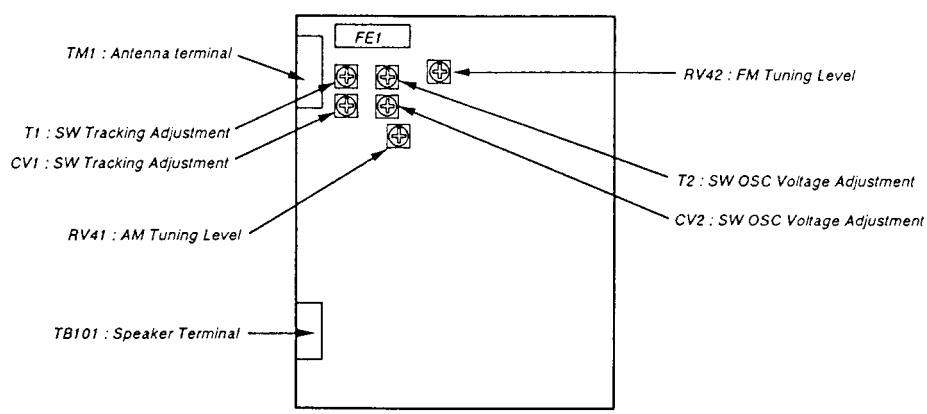

FM POLAR Adjustment (CIS model only)

Setting :
BAND switch : FM

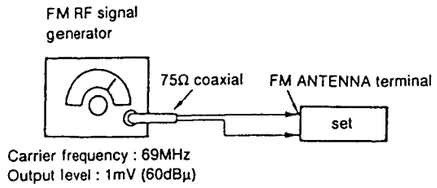

1. Connect the frequency counter to the TP1702 and adjust the RV1702 for a frequency of 31.25kHz ± 50Hz.
2. Connect the VTVM to the TP1701, receive the signal of 69MHz ± 1kHz (1kHz dev.) and adjust the reading of the VTVM to 0dB.
3. Set the modulation frequency of the FM RF signal generator to 31.25kHz (10kHz dev.) and adjust the L1701 so that the reading of the VTVM is 0dB.
4. Adjust the RV1701 so that the reading of the VTVM to 14dB.
5. Check that the separation between Pins 13 and 11 of the CN1701 is more than 18dB.

Adjustment Location : POLAR board

[POLAR BOARD]
(COMPONENT SIDE)

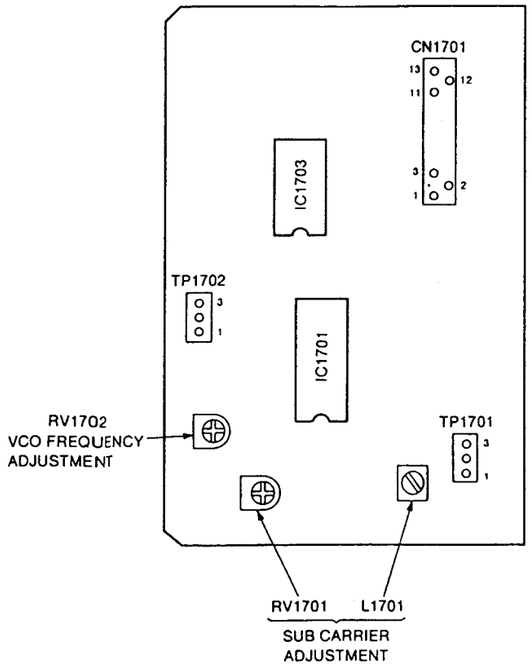

CD SECTION

Note :
1. CD Block basically constructed to operate without adjustment. Therefore, check each item in order given.
2. Use YEDS-18 disc (3-702-101-01) unless otherwise indicated.
3. Use the oscilloscope with more than 10M Ω impedance.
4. Clean an object lens by an applicator with neutral detergent when the signal level is low than specified value with the following checks.

Focus Bias Adjustment
This adjustment is to be done when the optical block is replaced.

Adjustment procedure :

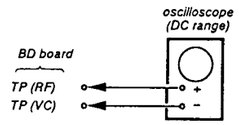

1. Connect oscilloscope to test point TP (VC) and TP (RF) on main board.
2. Turned power switch ON. (Stop mode)
3. Put disc (YEDS-18) in and press the ▶ button.
4. Press the DISPLAY/ENTER button. (Tracking servo ON)
5. Adjust RV101 so that the oscilloscope waveform is as shown in the figure below (eye pattern).
   A good eye pattern means that the diamond shape (◇) in the center of the waveform can be clearly distinguished.
6. Release test mode after adjustment is completed.

- RF signal reference waveform (eye pattern)

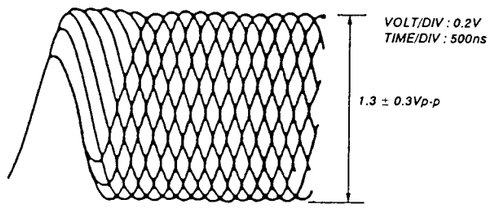

When observing the eye pattern, set the oscilloscope for AC range and raise vertical sensitivity.

S-Curve Check

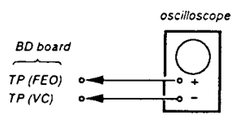

Procedure :
1. Connect oscilloscope to test point TP (FEO) and BD board.
2. Connect between test point TP (FOK) and GND by lead wire.
3. Turned Power switch on.
4. Put disc (YEDS-18) in and turned Power switch on again and actuate the focus search. (actuate the focus search when disc table is moving in and out.)
5. Check the oscilloscope waveform (S-curve) is symmetrical between A and B. And confirm peak to peak level within 3.8 ± 1.1Vp-p.

S-curve waveform

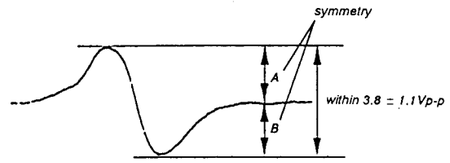

6. After check, remove the lead wire connected in step 2.

Note :
- Try to measure several times to make sure that the ratio of A : B or B : A is more than 10 : 7.
- Take sweep time as long as possible and light up the brightness to obtain best waveform.

RF Level Check

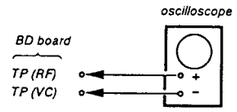

Procedure :
1. Connect oscilloscope to test point TP (RF) on BD board.
2. Turned Power switch on.
3. Put disc (YEDS-18) in and playback.
4. Confirm that oscilloscope waveform is clear and check RF signal level is correct or not.

Note :
Clear RF signal waveform means that the shape " ◇ " can be clearly distinguished at the center of the waveform.

RF signal waveform

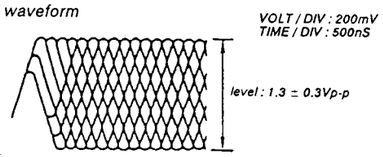

E-F Balance Check

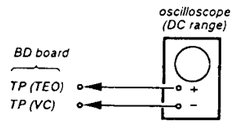

Procedure :
1. **Ground main board IC101 pin ⑯ with the lead wire.**
2. Connect oscilloscope to test point TP (TEO) on BD board.
3. Turned Power switch on.
4. Put disc (YEDS-18) in and playback.
5. Confirm that the osilloscope waveform is symmetrical on the top and bottom in relation to 0V, and check this level.

Traverse waveform

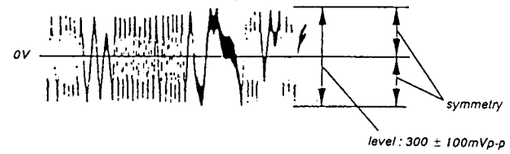

6. Remove the lead wire connected in step 1.

Focus/Tracking Gain
This gain has a margin, so even if it is slightly off. There is no problem.
Therefore, do not perform, this adjustment.
Please note that it should be fixed to mechanical center position when you moved and do not know original position.

Adjustment Location :

[BD BOARD] – Component side –

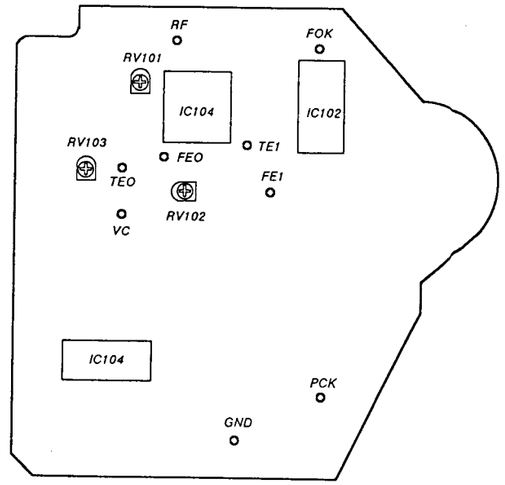

www.manualscenter.com

SECTION 5
DIAGRAMS

5-1. CD SECTION BLOCK DIAGRAM

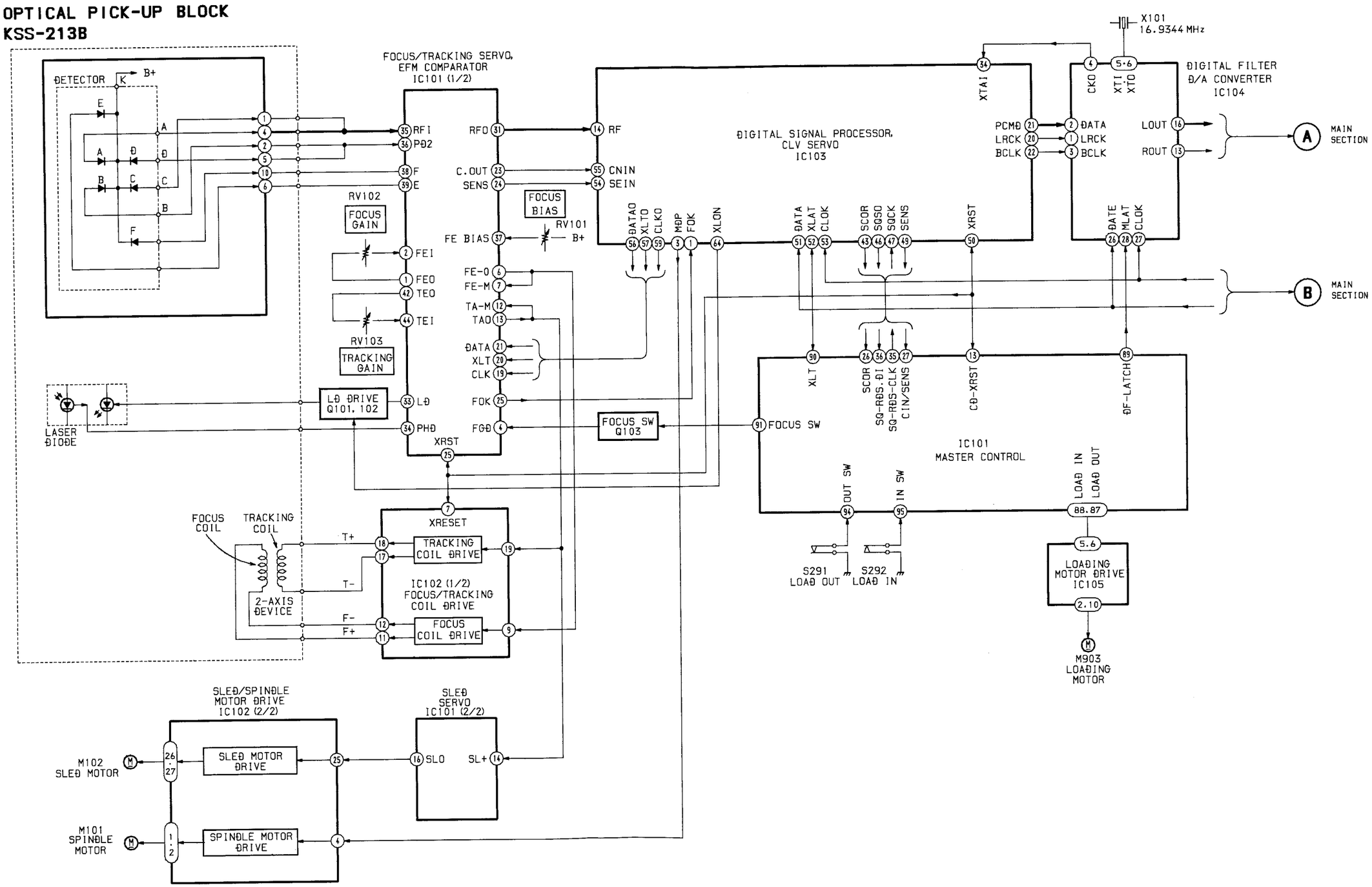

www.manualscenter.com

5-2. OTHER SECTION BLOCK DIAGRAM

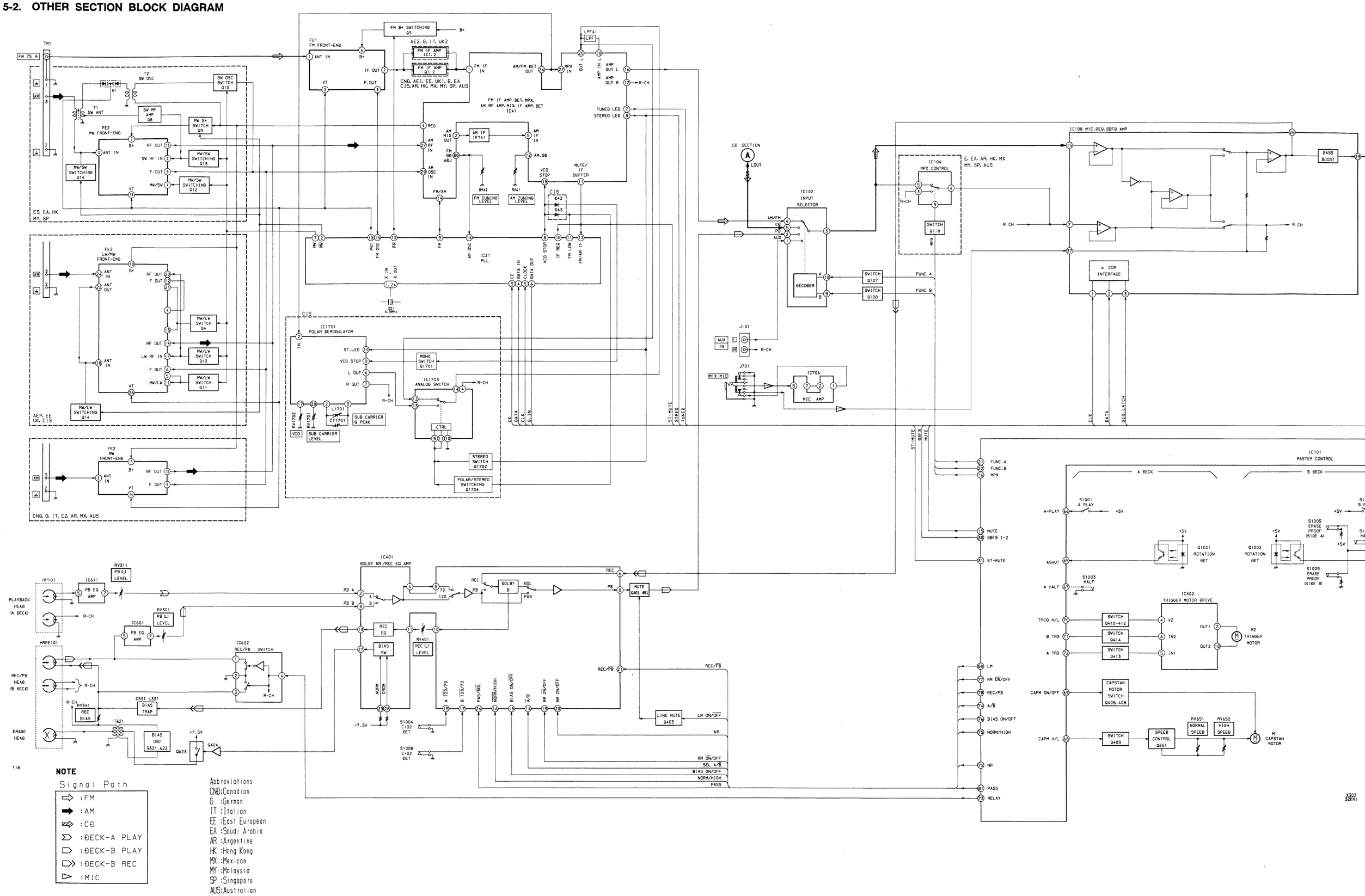

www.manualscenter.com

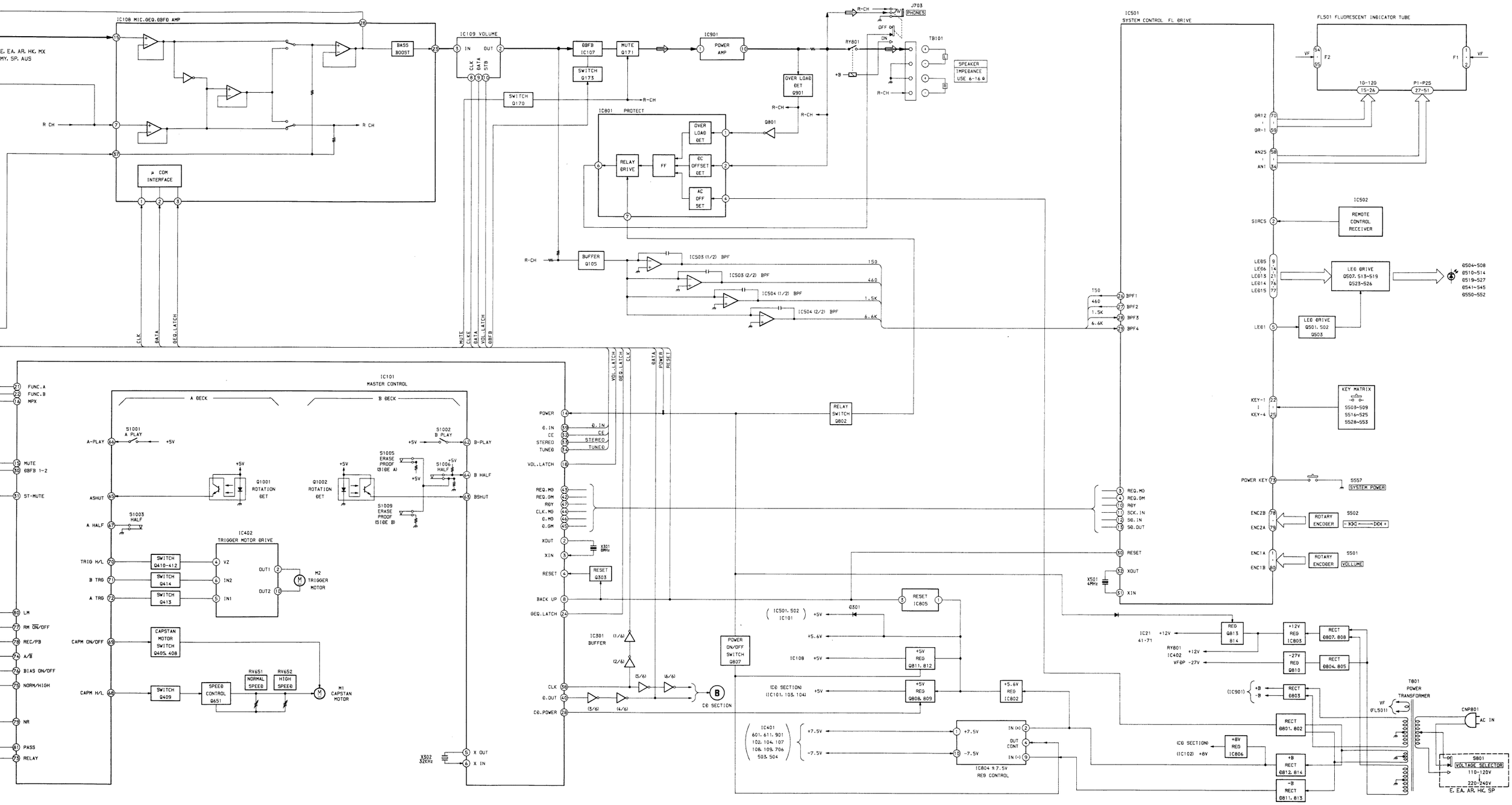

www.manualscenter.com

5-3. MAIN SECTION PRINTED WIRING BOARDS

• See page 39 for Semiconductor Lead Layouts.

• Circuit Boards Location

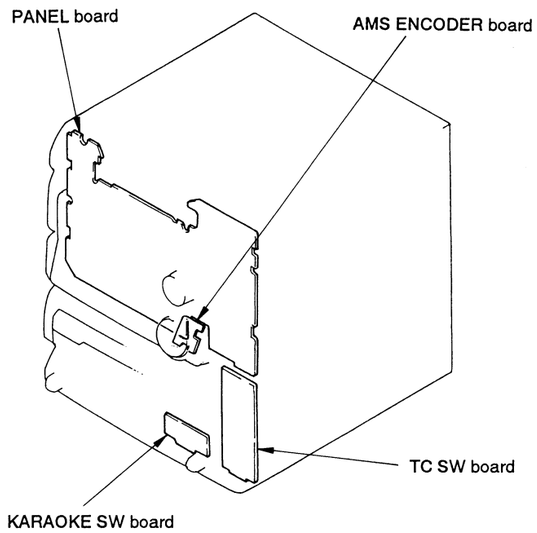

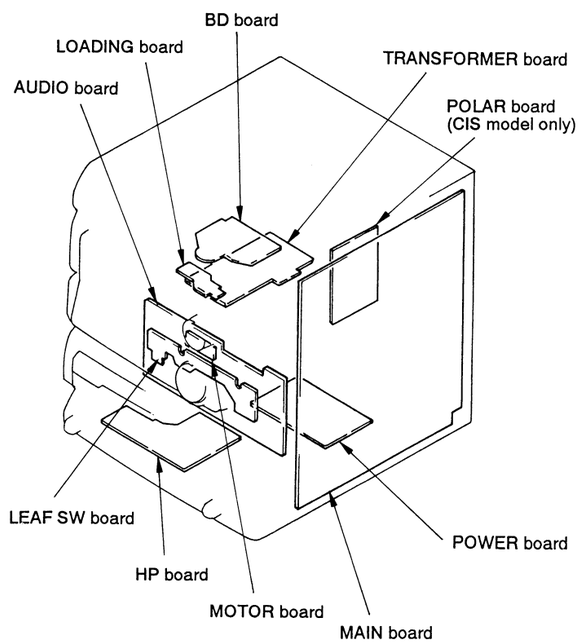

• Semiconductor Location

Ref. No.	Location	Ref. No.	Location
D21	A-13	IC706	B-5
D41	E-12	IC801	H-13
D42	C-11	IC802	K-13
D43	C-11	IC803	J-13
D101	G-11	IC804	L-14
D102	E-14	IC805	G-10
D103	G-15	IC806	L-16
D104	H-10	IC901	C-21
D105	H-10		
D106	H-9	Q1	C-14
D107	F-14	Q2	C-14
D301	F-10	Q3	B-15
D302	G-10	Q11	C-14
D304	G-10	Q12	B-15
D401	J-11	Q13	B-16
D801	I-13	Q14	C-16
D802	I-13	Q105	E-16
D803	I-15	Q107	G-12
D804	K-16	Q108	H-12
D805	K-16	Q110	F-12
D806	K-16	Q170	F-9
D807	J-14	Q171	E-14
D808	J-14	Q172	D-14
D809	H-14	Q173	F-15
D910	H-14	Q174	F-15
D811	J-14	Q303	G-9
D812	J-13	Q401	L-11
D813	J-14	Q403	J-11
D814	J-14	Q404	L-11
D815	G-10	Q405	J-10
D819	F-10	Q406	J-10
D823	K-13	Q407	J-10
D824	K-13	Q408	J-9
D901	B-20	Q409	J-9
D902	A-22	Q410	J-10
D903	B-23	Q411	J-10
D951	B-22	Q412	J-9
		Q413	J-9
IC1	B-14	Q414	J-10
IC2	B-14	Q451	L-10
IC21	B-12	Q801	H-13
IC41	D-12	Q802	I-12
IC101	G-9	Q807	L-13
IC102	G-12	Q808	J-13
IC104	F-12	Q809	J-13
IC105	F-11	Q810	L-16
IC107	E-15	Q811	K-12
IC108	G-14	Q812	K-12
IC109	E-16	Q813	I-13
IC301	D-9	Q814	I-13
IC401	K-8	Q901	C-20
IC402	J-11	Q951	B-23

Note:

- ○——— : parts extracted from the component side.
- ▒▒▒▒ : Pattern on the side which is seen.
- Abbreviation
  - CND : Canadian
  - G : German
  - IT : Italian
  - AUS : Australian
  - EA : Saudi Arabia
  - EE : East European
  - MX : Mexican
  - HK : Hong Kong
  - SP : Singapore
  - MY : Malaysia
  - AR : Argentine

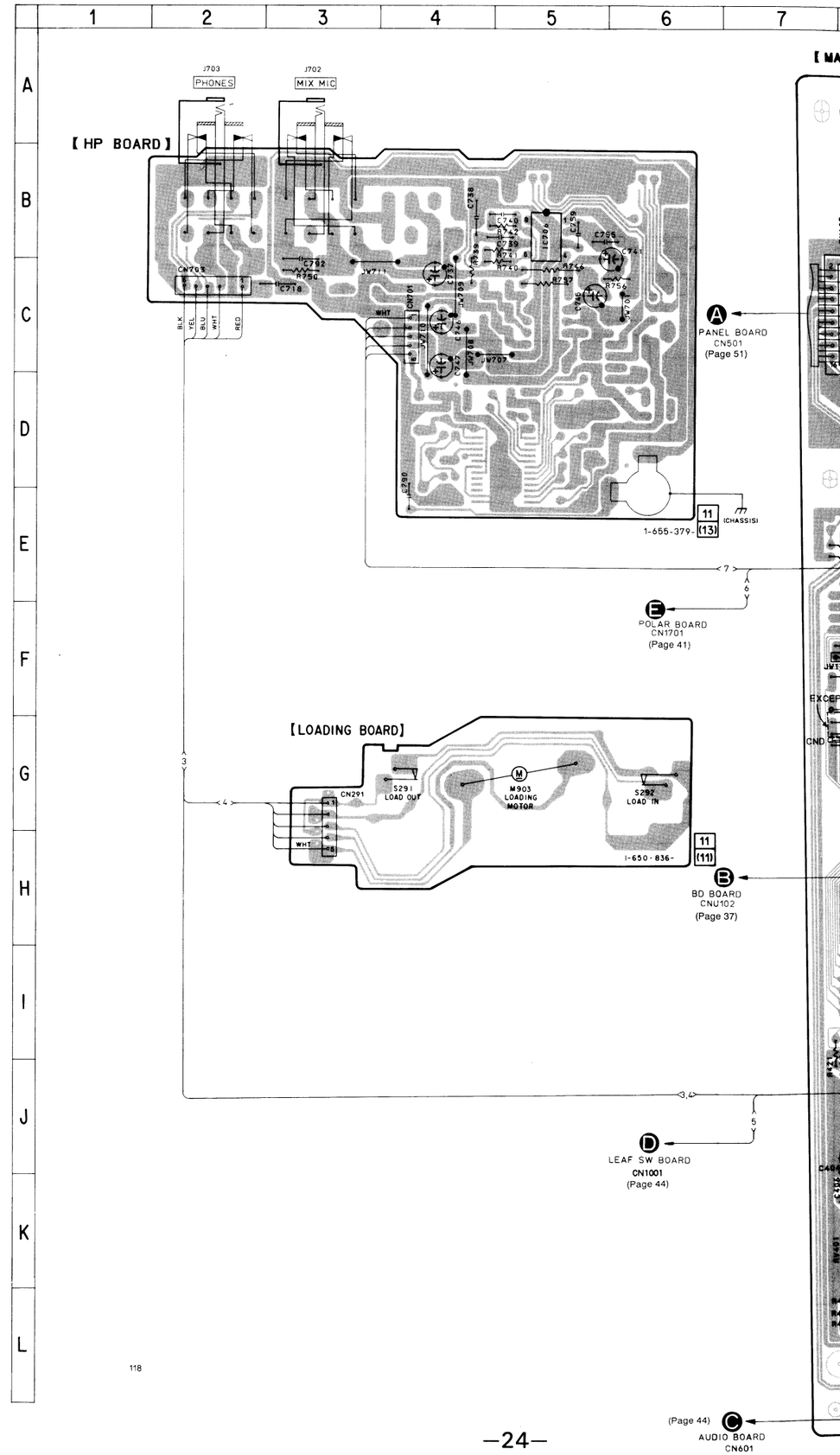

www.manualscenter.com

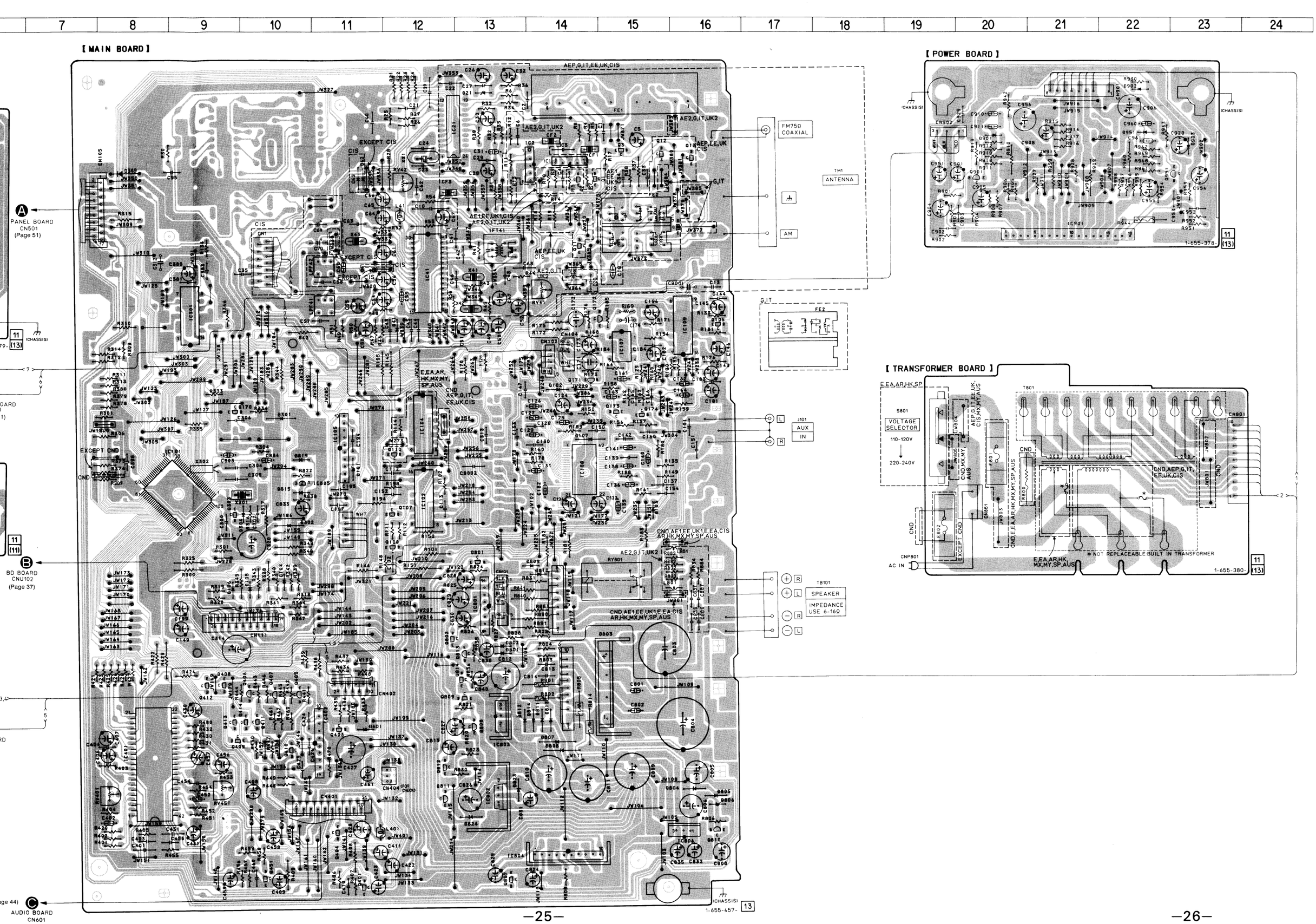

www.manualscenter.com

www.manualscenter.com

- **Waveforms**

⑬ IC101 ② 3.4 Vp-p 4 MHz

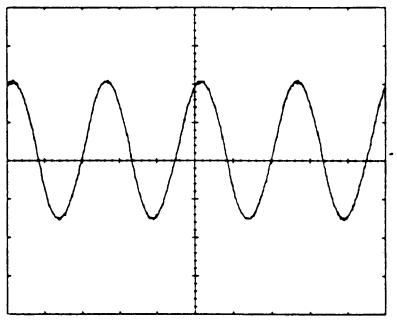

⑭ IC101 ⑤ 4 Vp-p 32.8 MHz

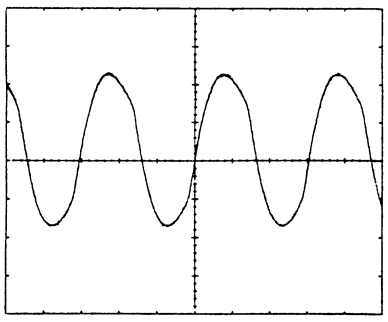

⑮ IC21 ① 2.5 Vp-p 4.5 MHz

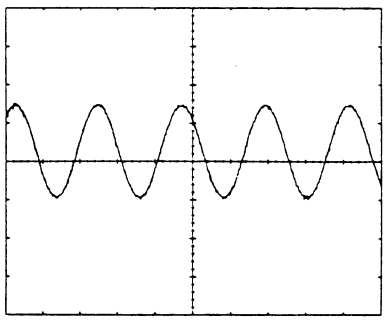

Note:

- All capacitors are in μF unless otherwise noted. pF: μμF 50 WV or less are not indicated except for electrolytics and tantalums.
- All resistors are in Ω and ¼ W or less unless otherwise specified.
- ▭ : nonflammable resistor.
- ⚠ : fusible resistor.

Note:	Note:
The components identified by mark ⚠ or dotted line with mark ⚠ are critical for safety. Replace only with part number specified.	Les composants identifiés par une marque ⚠ sont critiques pour la sécurité. Ne les remplacer que par une pièce portant le numéro spécifié.

- ▬▬ : B + Line.
- ▬ ▬ : B − Line.
- ▭ : adjustment for repair.
- Voltage and waveforms are dc with respect to ground under no-signal (detuned) conditions.
  no mark : FM
  ( ) : MW
  < > : PLAY (DECK A)
  [ ] : REC (DECK B)
- Voltages are taken with a VOM (Input impedance 10 MΩ). Voltage variations may be noted due to normal production tolerances.
- Waveforms are taken with a oscilloscope. Voltage variations may be noted due to normal production tolerances.
- Circled numbers refer to waveforms.
- Signal path.
  ⇨ : FM
  ➡ : MW
  ▷ : PB (DECK A)
  ▷▷ : REC (DECK B)
  ▷ : PB (DECK B)
  ⇨ : CD
  ▷ : MIC
- Abbreviation
  CND : Canadian
  G : German
  IT : Italian
  AUS : Australian
  EA : Saudi Arabia
  EE : East European
  MX : Mexican
  HK : Hong Kong
  SP : Singapore
  MY : Malaysia
  AR : Argentine

5-4. MAIN SECTION SCHEMATIC DIAGRAM

• See pages 54 to 58 for IC Block Diagrams.

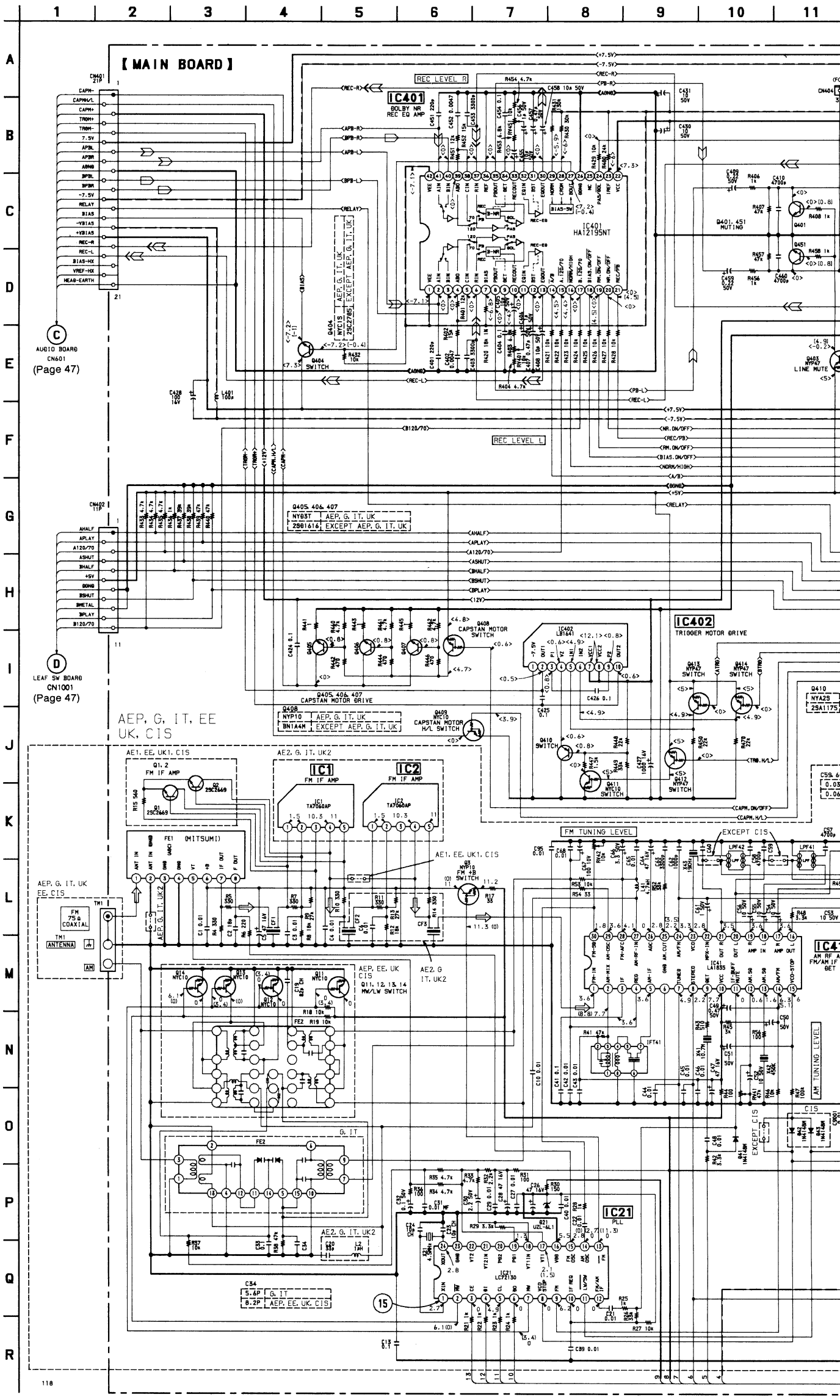

www.manualscenter.com

lagrams.

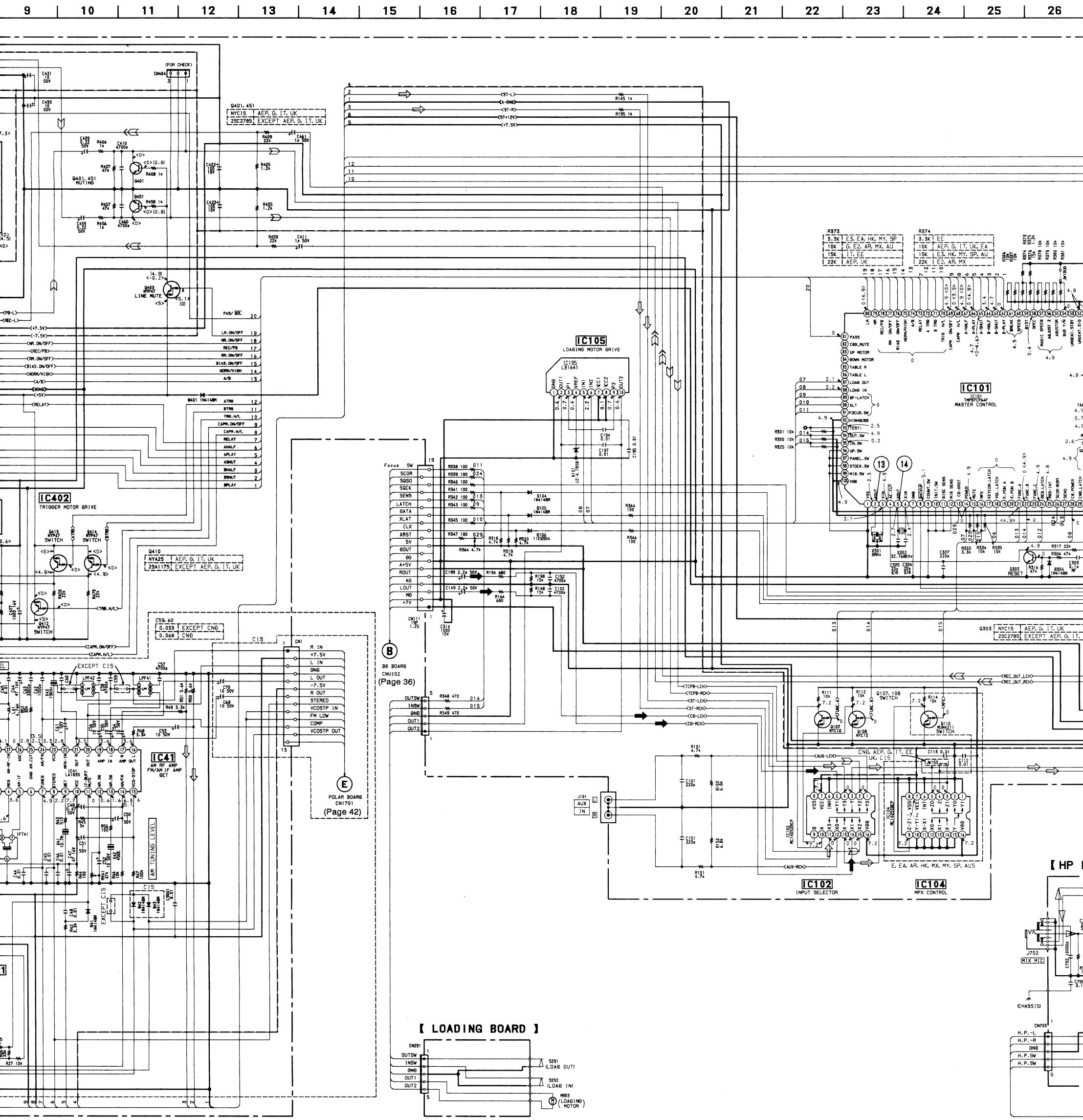

www.manualscenter.com

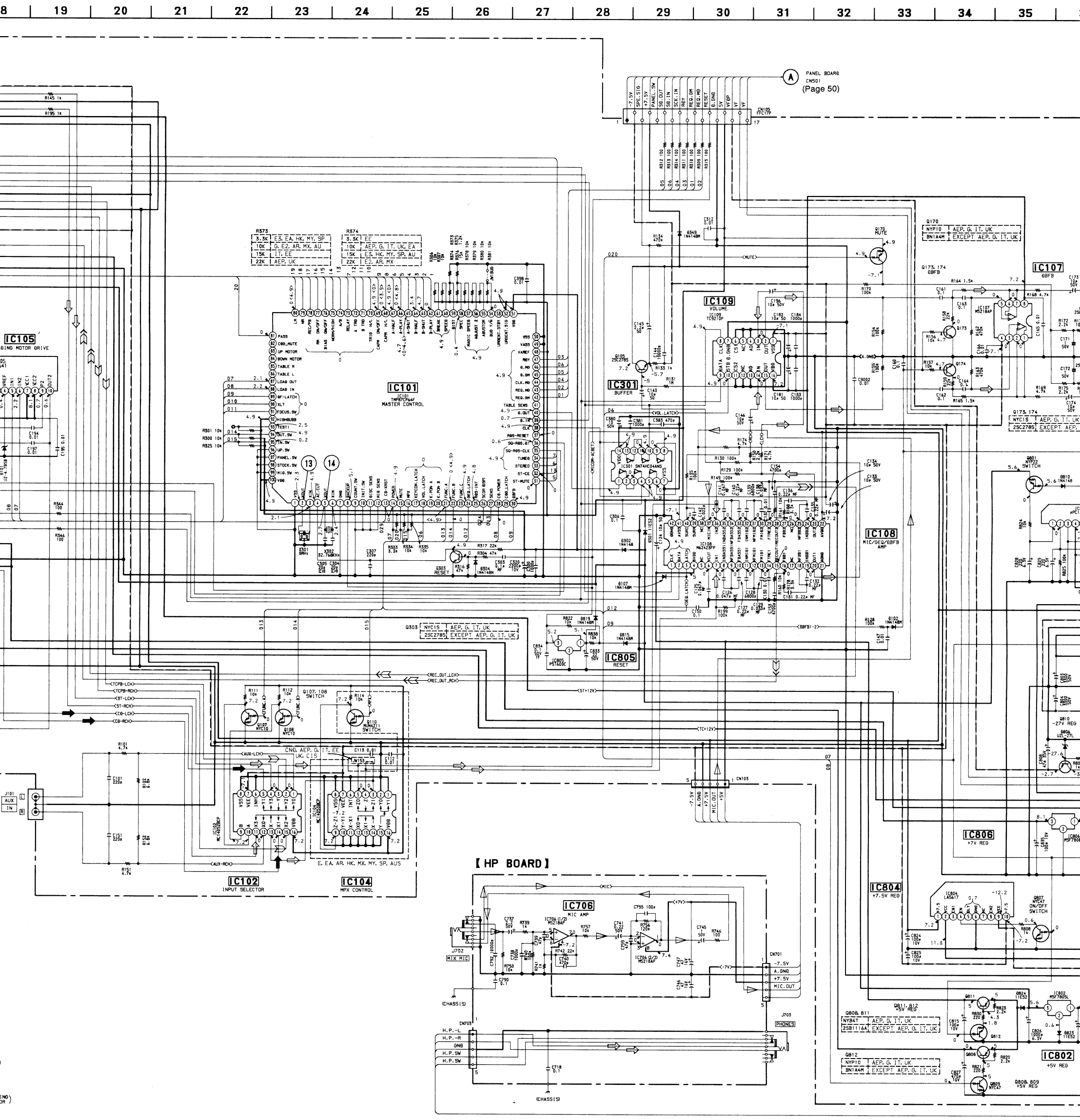

www.manualscenter.com

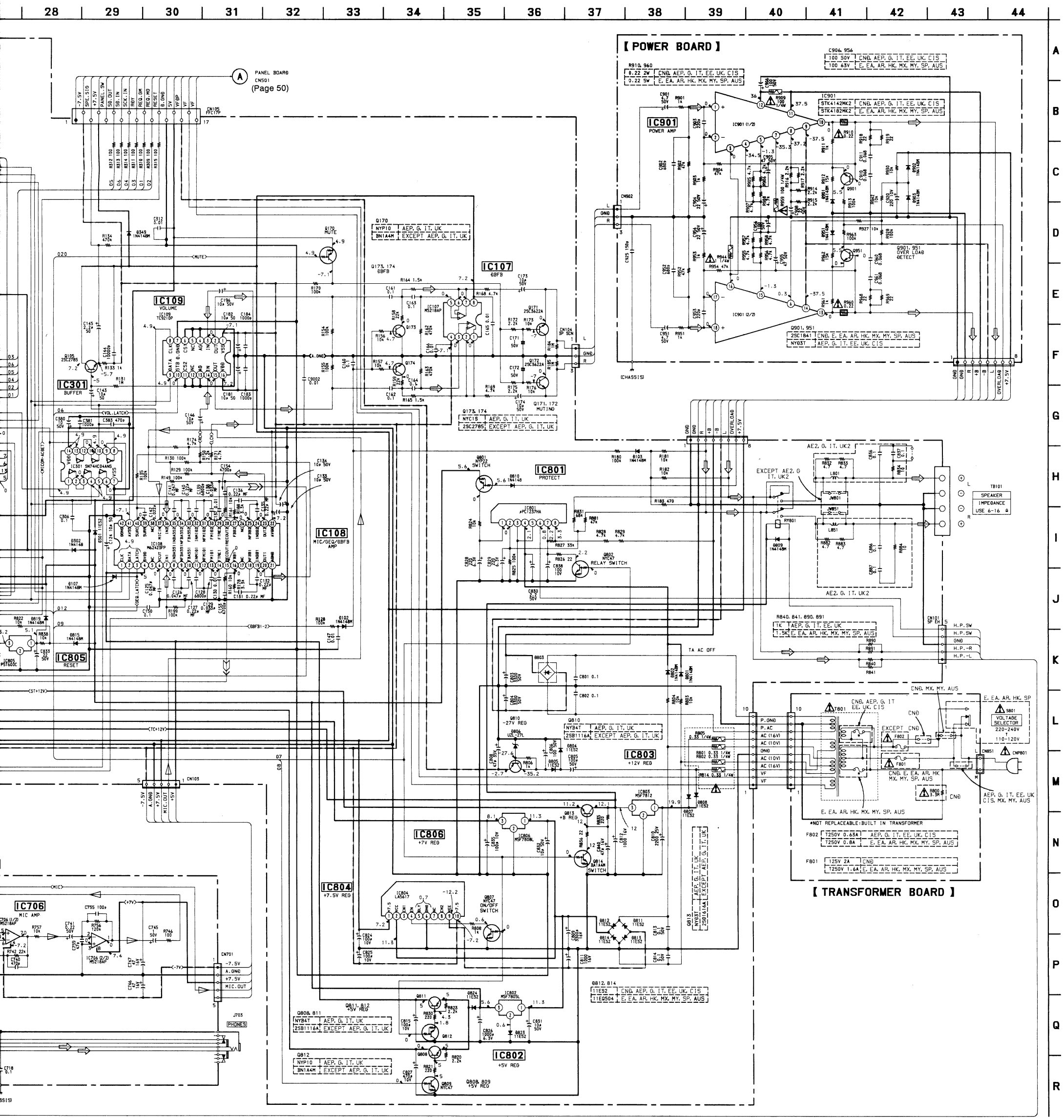

5-5. MAIN BOARD PRINTED WIRING BOARD AND SCHEMATIC DIAGRAM (CND, E, EA, AR, HK, MX, MY, SP, AUS)

- See pages 54 to 58 for IC Block Diagrams and page 39 for Semiconductor Lead Layouts.

- **Semiconductor Location**

Ref. No.	Location
D1	C-4
D21	A-2
IC21	B-1
Q1	B-3
Q2	B-3
Q3	B-4
Q8	C-5
Q9	D-3
Q10	D-3
Q12	B-4
Q13	B-5

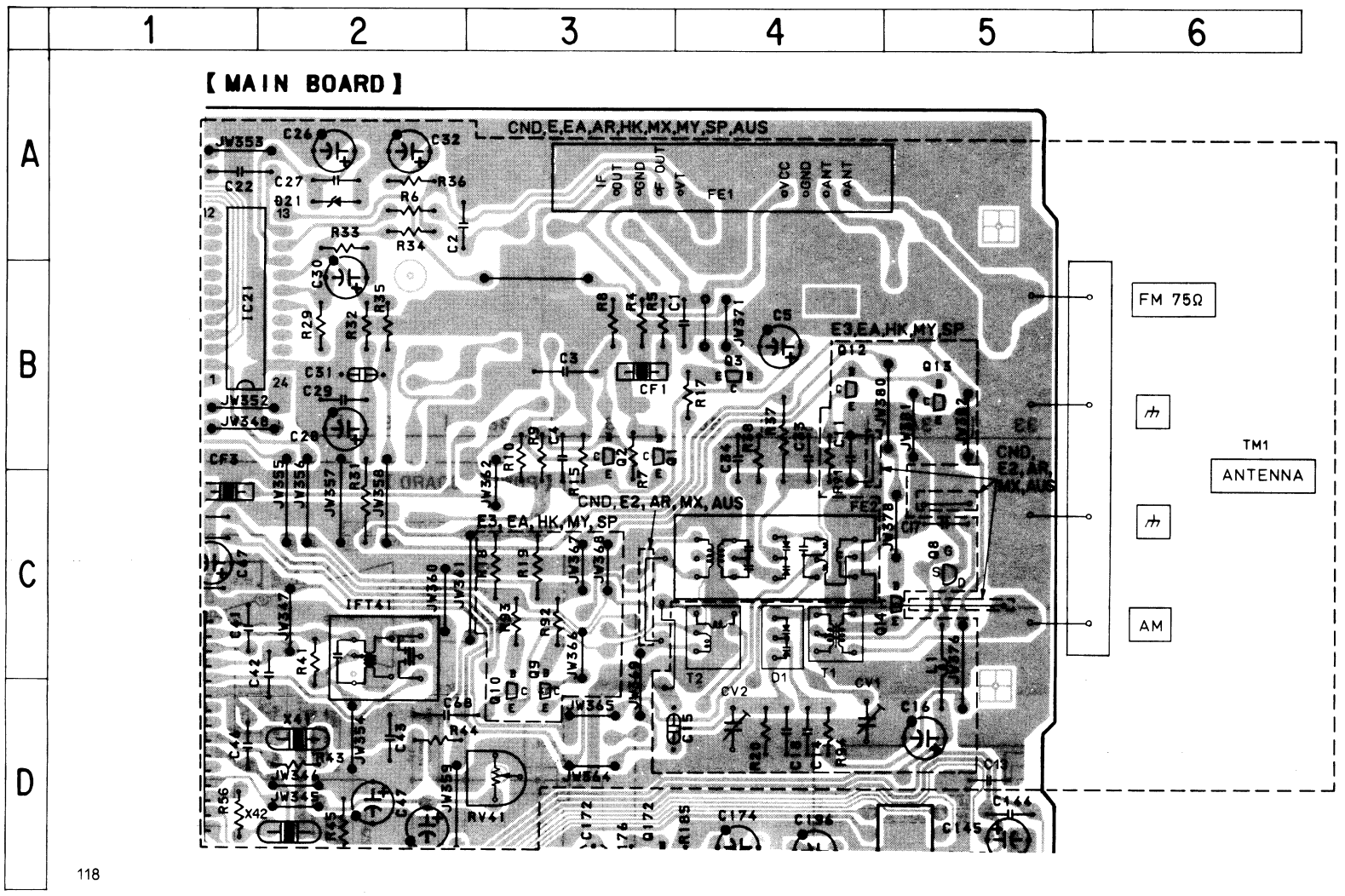

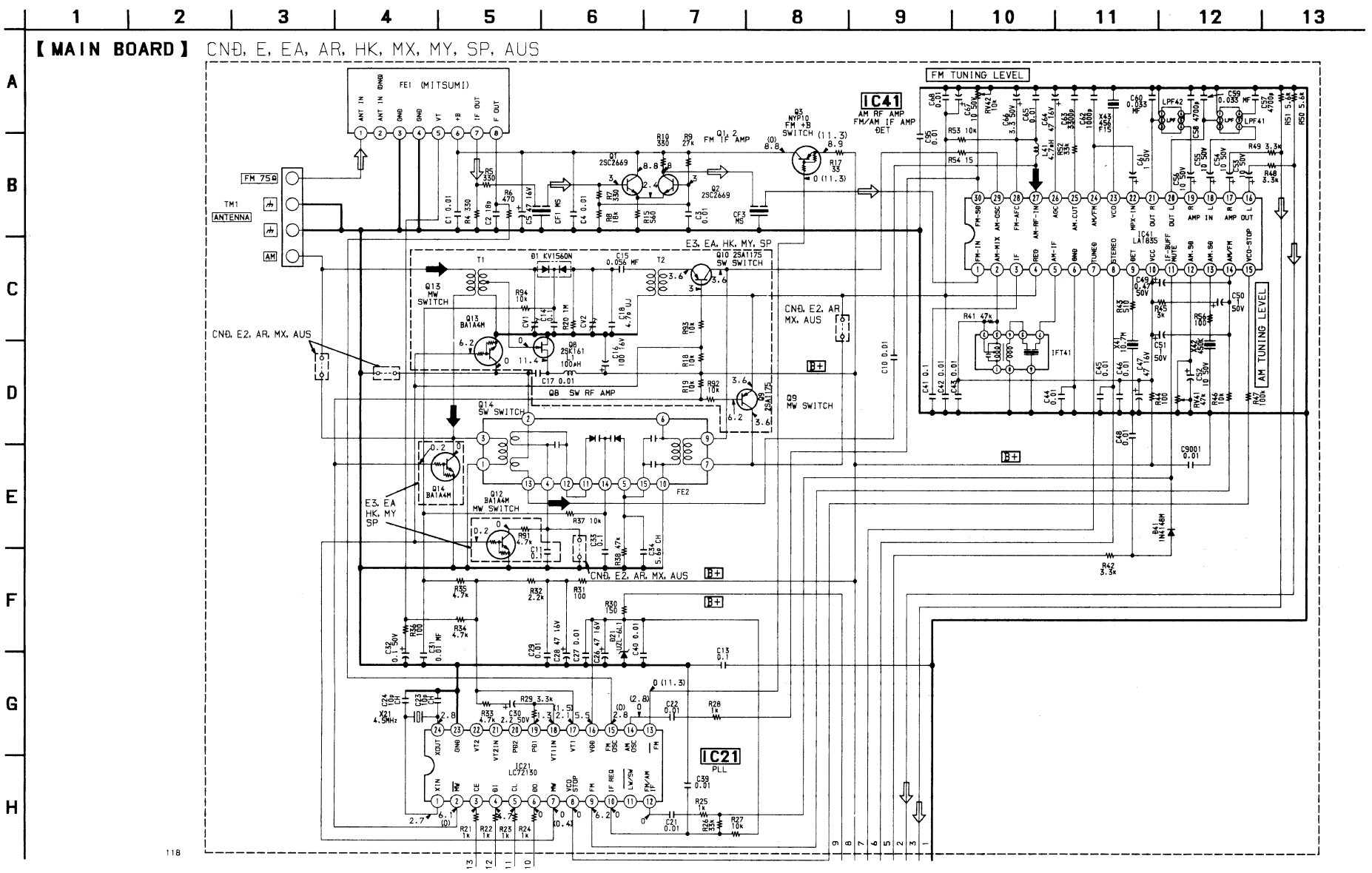

Note on Schematic Diagram:

- All capacitors are in μF unless otherwise noted. pF: μμF 50 WV or less are not indicated except for electrolytics and tantalums.
- All resistors are in Ω and ¼ W or less unless otherwise specified.
- B+ : B + Line.
- ▭ : adjustment for repair.
- Voltage is dc with respect to ground under no-signal (detuned) conditions.
  no mark : FM
  ( ) : MW
- Voltages are taken with a VOM (Input impedance 10 MΩ).
  Voltage variations may be noted due to normal production tolerances.
- Signal path.
  ⇨ : FM
  ➡ : MW
- Abbreviation
  CND : Canadian
  AUS : Australian
  EA : Saudi Arabia
  AR : Argentine
  HK : Hong Kong
  MX : Mexican
  MY : Malaysia
  SP : Singapore

Note on Printed Wiring Board:

- ○——— : parts extracted from the component side.
- ▒ : Pattern on the side which is seen.

www.manualscenter.com

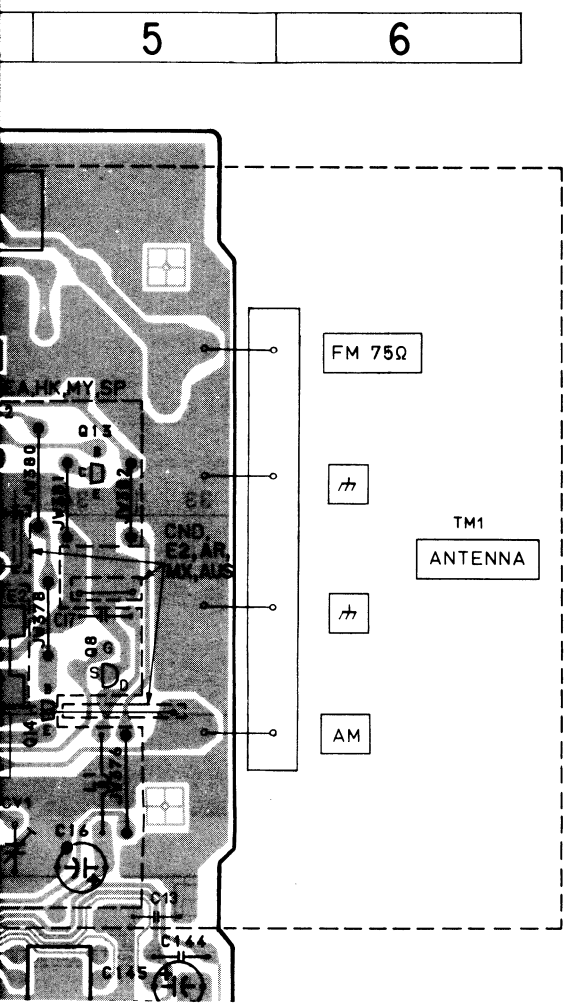

5-6. CD SECTION SCHEMATIC DIAGRAM

- See pages 54 to 58 for IC Block Diagrams.

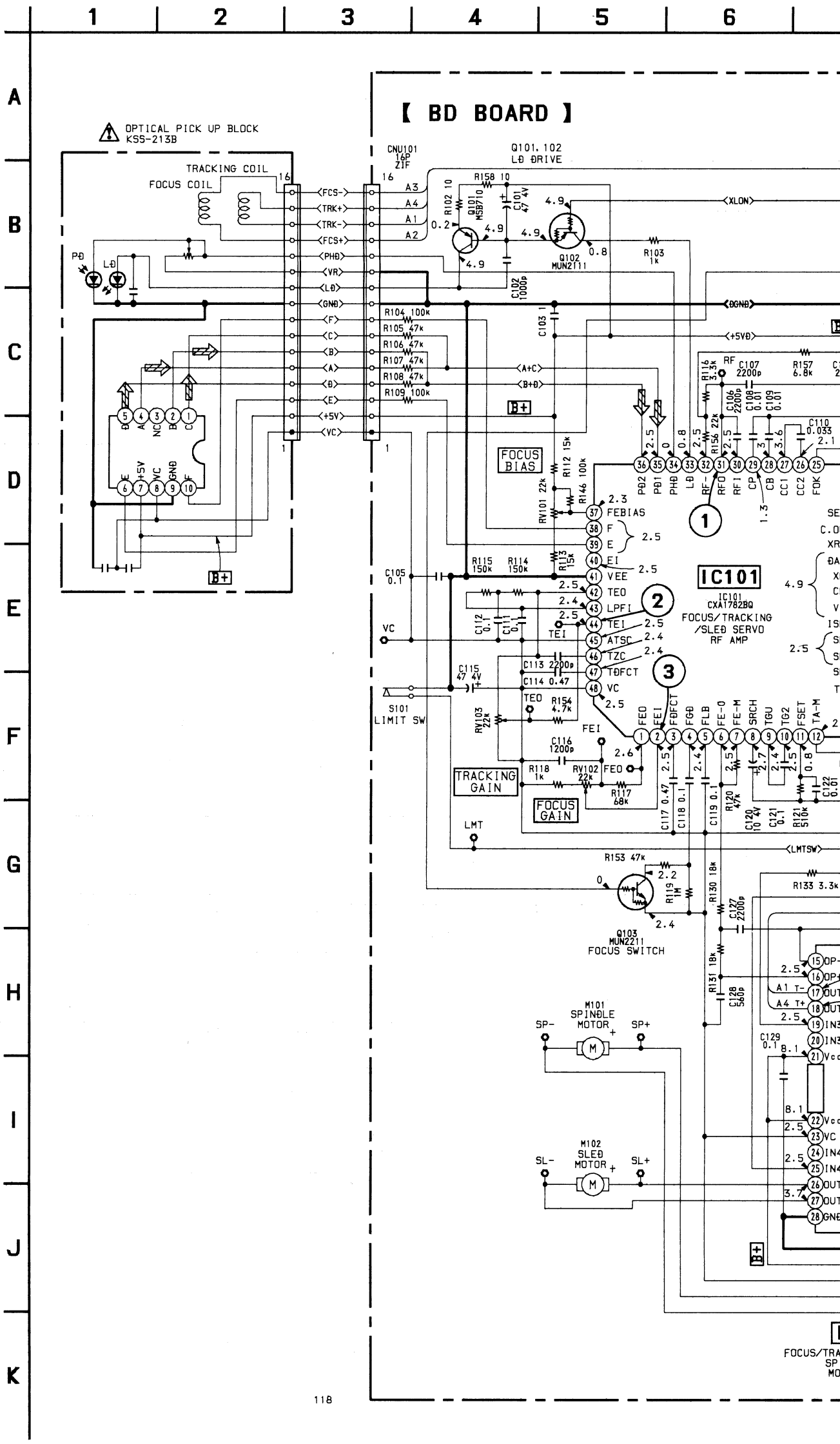

www.manualscenter.com

N SCHEMATIC DIAGRAM
58 for IC Block Diagrams.

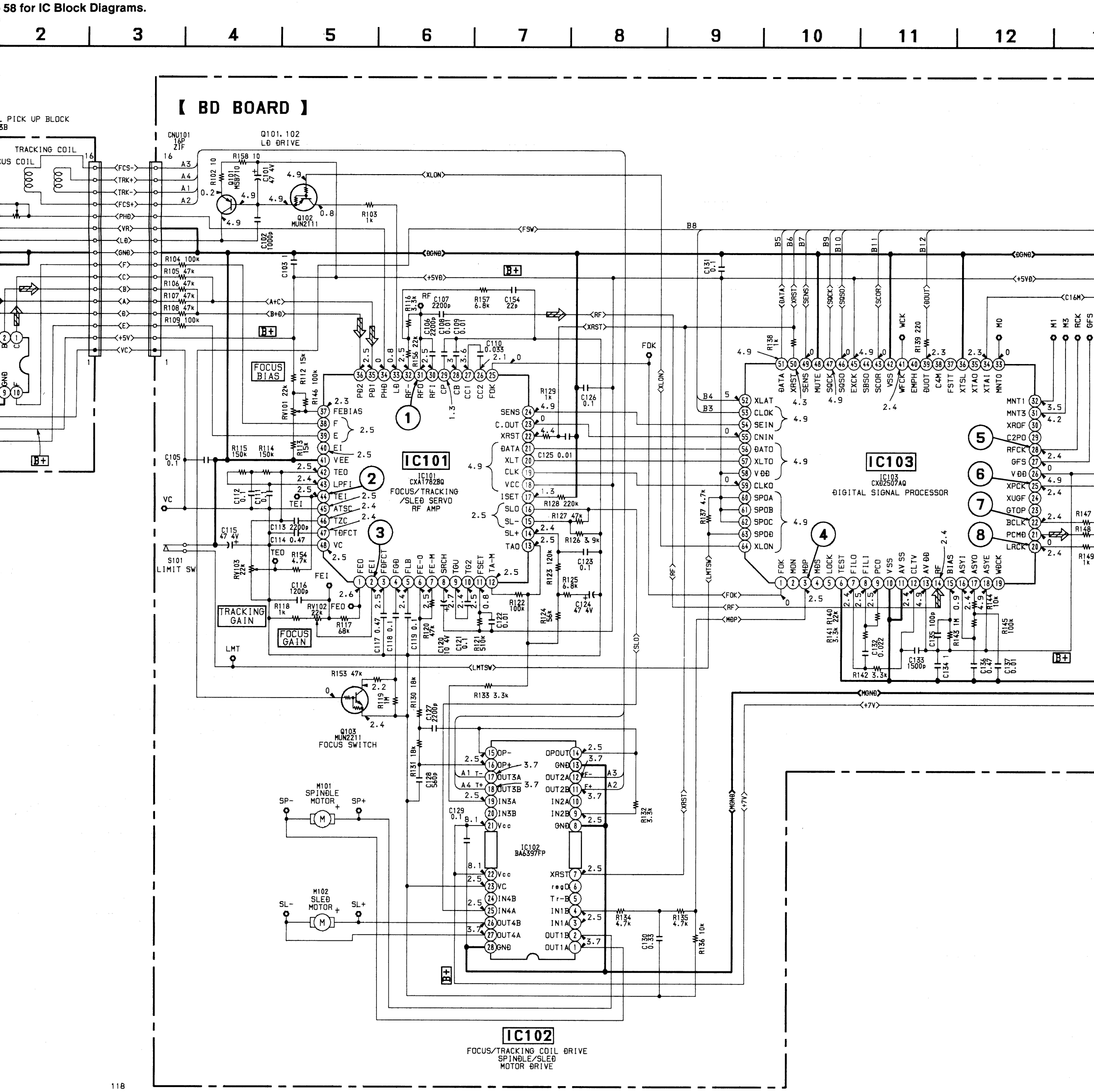

118

www.manualscenter.com

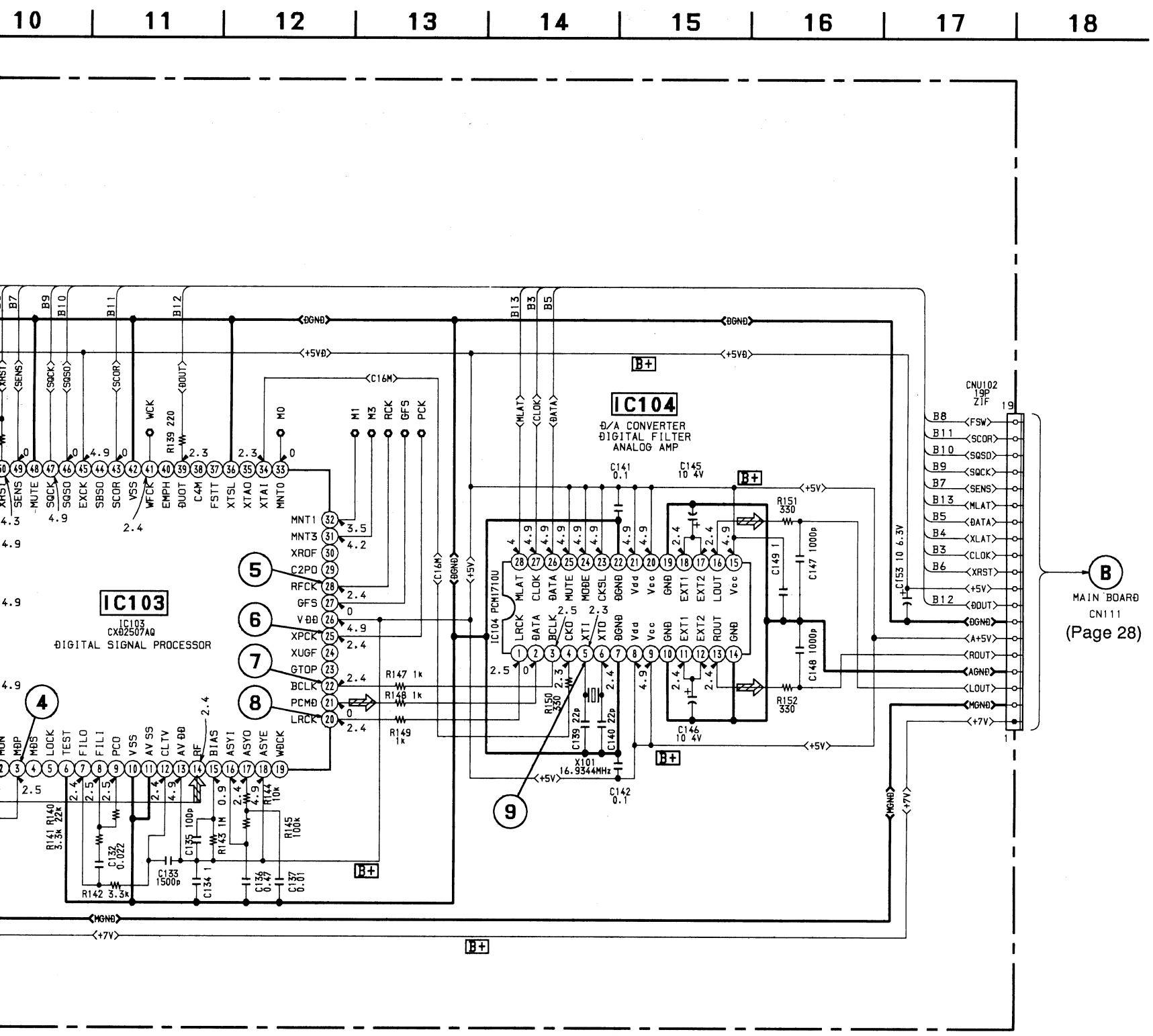

Note:

- All capacitors are in μF unless otherwise noted. pF: μμF 50 WV or less are not indicated except for electrolytics and tantalums.
- All resistors are in Ω and ¼ W or less unless otherwise specified.

Note:	Note:
The components identified by mark ⚠ or dotted line with mark ⚠ are critical for safety. Replace only with part number specified.	Les composants identifiés par une marque ⚠ sont critiques pour la sécurité. Ne les remplacer que par une pièce portant le numéro spécifié.

- [B+] : B + Line.
- [ ] : adjustment for repair.
- Voltage and waveforms are dc with respect to ground under no-signal (detuned) conditions.
  no mark : STOP (CD)
- Voltages are taken with a VOM (Input impedance 10 MΩ).
  Voltage variations may be noted due to normal production tolerances.
- Waveforms are taken with a oscilloscope.
  Voltage variations may be noted due to normal production tolerances.
- Circled numbers refer to waveforms.
- Signal path.
  ⇨ : CD

www.manualscenter.com

5-7. CD SECTION PRINTED WIRING BOARD

• See page 22 for Circuit Boards Location and page 39 for Semiconductor Lead Layouts.

[BD BOARD] (SIDE A)

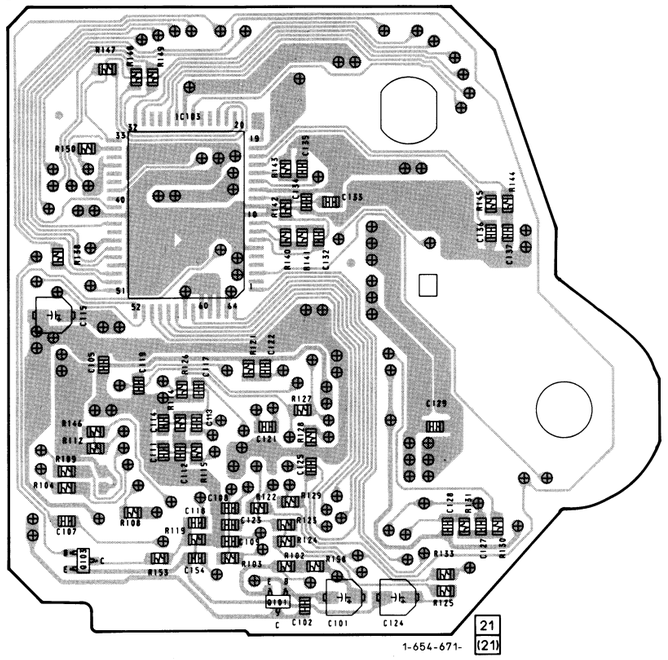

[BD BOARD] (SIDE B)

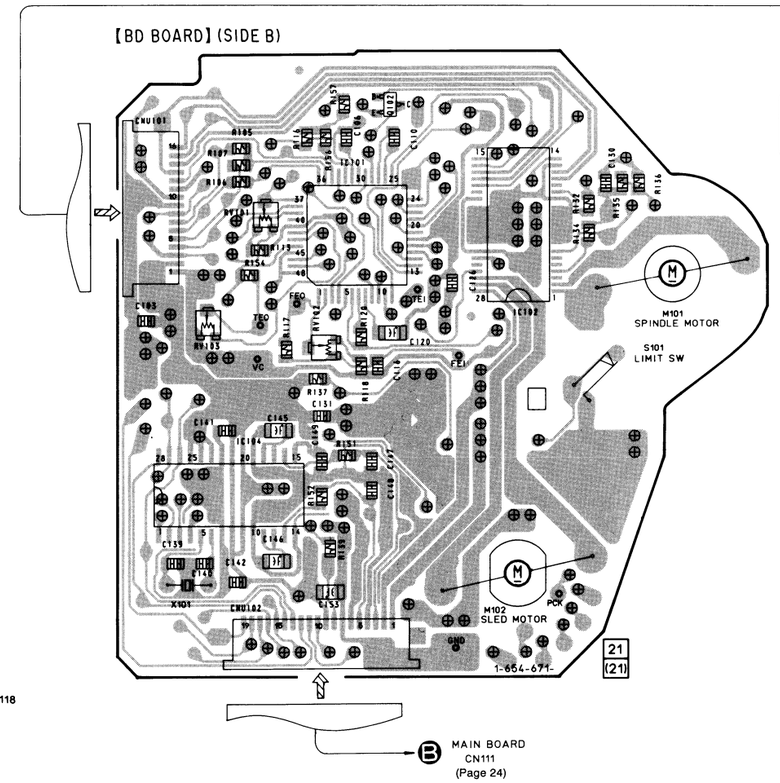

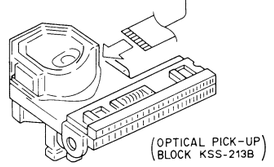

• **Semiconductor Location**

Ref. No.	Location
IC101	H-3
IC102	H-4
IC103	C-3
IC104	J-2
Q101	E-3
Q102	G-3
Q103	E-2

• **Waveforms**

❶ IC101 ㉛ 1.4 Vp-p

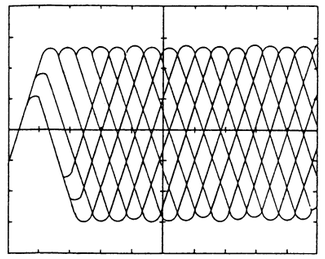

❷ IC101 ㊹ 8 mVp-p 0.2 ms/DIV

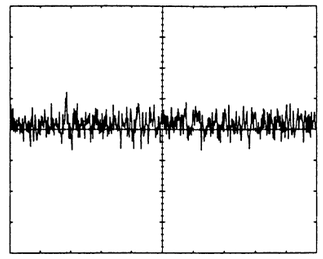

❸ IC101 ② 20 mVp-p 0.2 ms/DIV

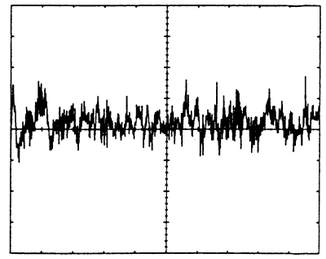

❹ IC103 ③ 2.4 Vp-p 7.5 μsec

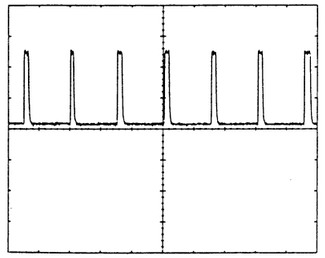

❺ IC103 ㉘ 5.1 Vp-p 137 μsec

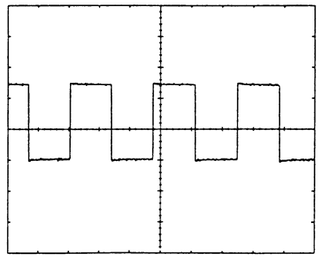

❻ IC103 ㉕ 5.1 Vp-p 232.7 nsec

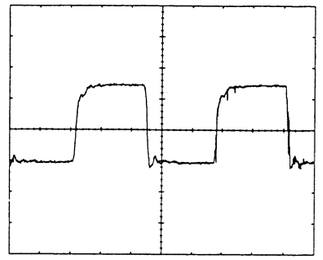

❼ IC103 ㉒ 5.1 Vp-p 472.7 nsec

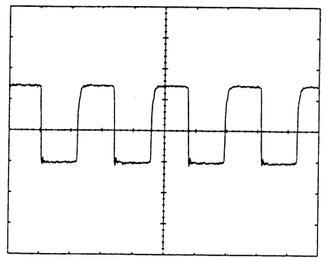

❽ IC103 ⑳ 5.1 Vp-p 23 μsec

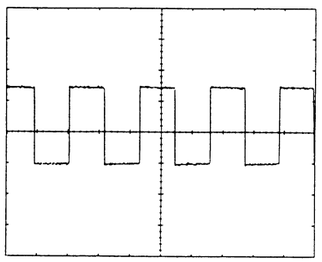

❾ IC104 ⑤ 3 Vp-p 16.9344 MHz

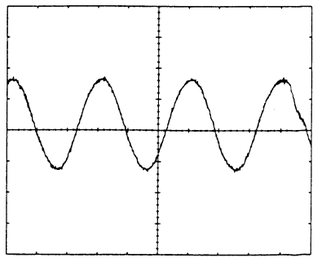

Note:

- ○——— : parts extracted from the component side.
- ⊕ : Through hole.
- ▒ : Pattern on the side which is seen.

(The other layers' patterns are not indicated.)

www.manualscenter.com

• Semiconductor Lead Layouts

BA6397FP

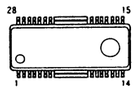

CXA1782BQ

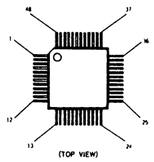

CXD2507AQ

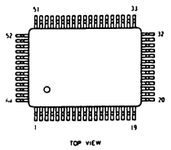

CXP82612

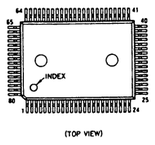

GP1U57XB

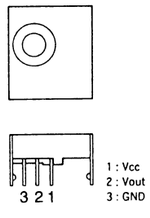

LA5617

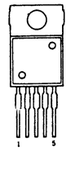

LB1641

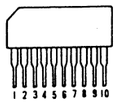

M5F7808
TA7805S
TA7812S

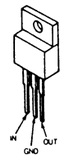

PST600C

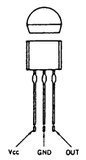

STK4142MK2
STK4182MK2

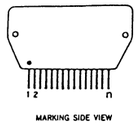

TA7060AP

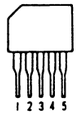

TMP87CP64F

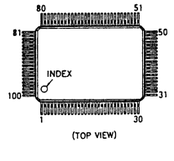

μPC1237HA

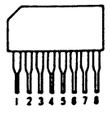

μPC1330HA

11EQS04
11ES2-NTA2B
HZS27-2L
HZS6A1L

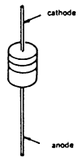

1N4148M
UZP-5.6BC
UZ-4.7BSB

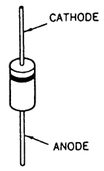

KV1560N

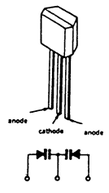

NJL5165K-A

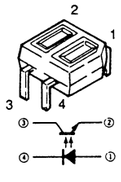

RBA-402-SL

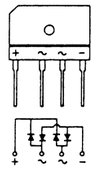

2SA1175-HFE
2SC2785-HFE

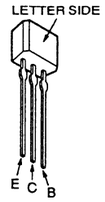

2SB1116A-L
2SB1116-K
2SC1841-PAFAEA
2SC2001-LK
2SD1387
2SD1616A-K
2SD1616-K
DTA144ES

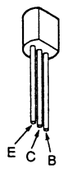

2SC2669-OY
2SC3622A-LK
DTA114ES
DTA124ES
DTC114ES
DTC144ES
UN4111

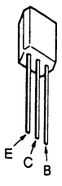

2SK161-YGR

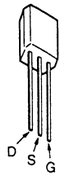

SEL2210R
SEL2410E-C
TLO124

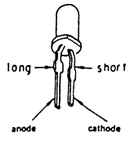

SEL2910A

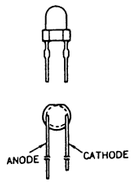

SEL2910D

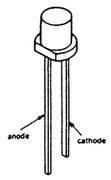

SEL5221S

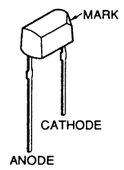

SEL5421E-TH8F

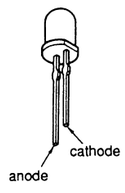

SEL5920A
SML59420C

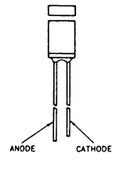

www.manualscenter.com

5-8. POLAR BOARD PRINTED WIRING BOARD AND SCHEMATIC DIAGRAM

- See page 22 for Circuit Boards Location and See pages 54 to 58 for IC Block Diagrams.

- **Semiconductor Location**

Ref. No.	Location
D1701	C-1
D1703	E-2
D1704	C-3
D1705	E-2
IC1701	B-2
IC1703	D-2
Q1701	C-3
Q1702	C-1
Q1704	E-2

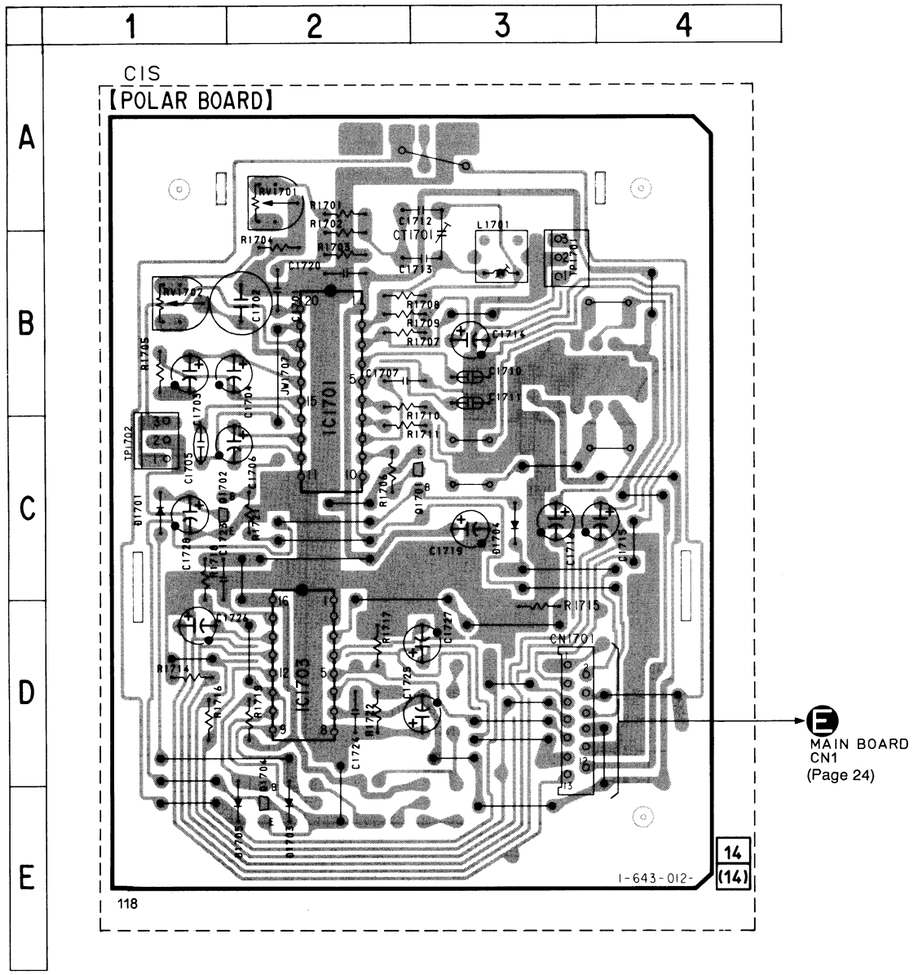

Note on Printed Wiring Board:

- ○——— : parts extracted from the component side.
- ▒▒▒ : Pattern on the side which is seen.

Note on Schematic Diagram:

- All capacitors are in μF unless otherwise noted. pF: μμF 50 WV or less are not indicated except for electrolytics and tantalums.
- All resistors are in Ω and ¼ W or less unless otherwise specified.
- B+ : B + Line.
- B− : B − Line.
- ▭ : adjustment for repair.
- Voltage is dc with respect to ground under no-signal (detuned) conditions.
  no mark : FM
- Voltages are taken with a VOM (Input impedance 10 MΩ).
  Voltage variations may be noted due to normal production tolerances.
- Signal path.
  ⇨ : FM

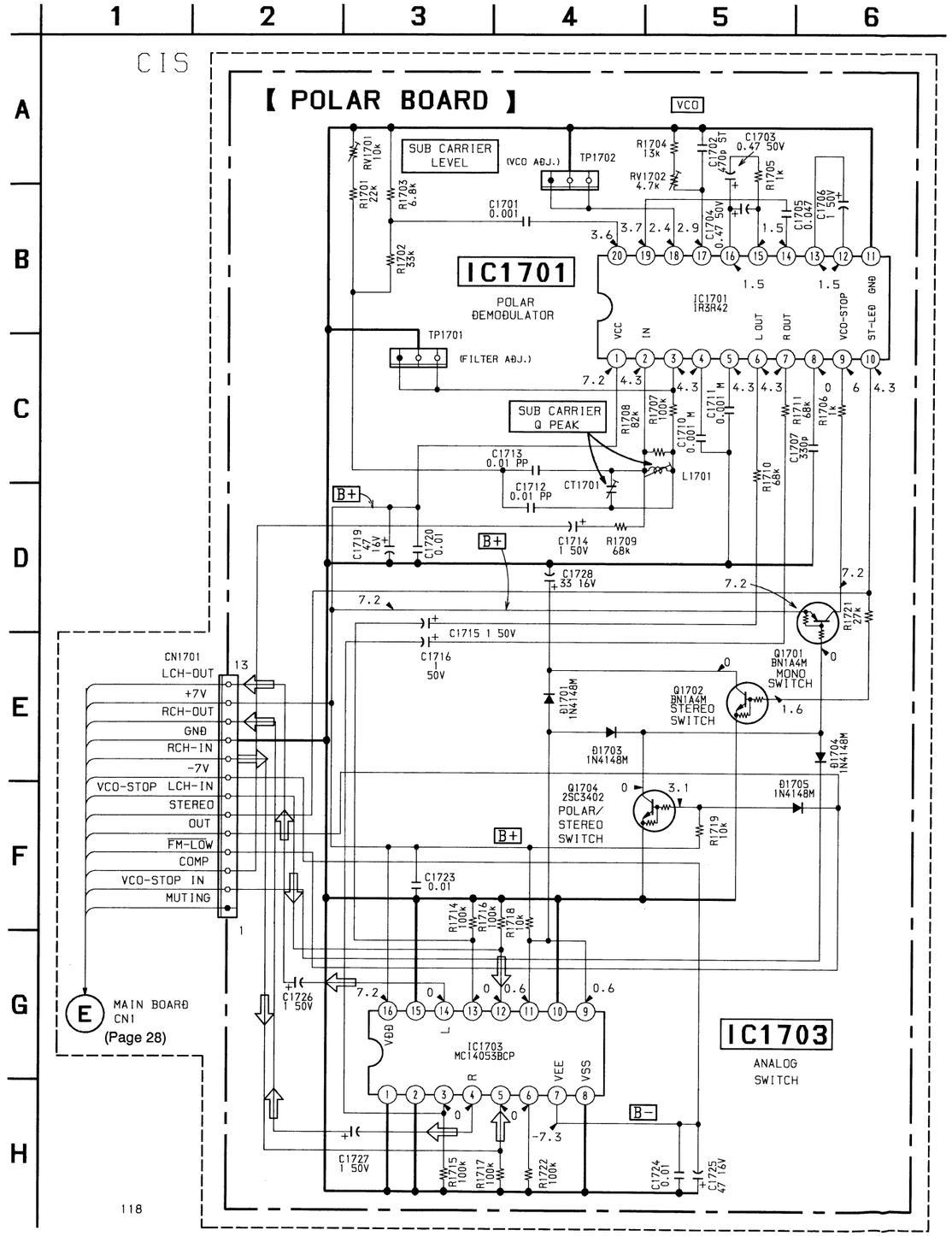

www.manualscenter.com

5-9. TAPE SECTION PRINTED WIRING BOARDS

- See page 22 for Circuit Boards Location and page 39 for Semiconductor Lead Layouts.

- **Semiconductor Location**

Ref. No.	Location
IC601	H-3
IC602	G-4
IC611	H-9
Q621	H-6
Q622	H-6
Q623	H-5
Q651	F-9
Q1001	B-2
Q1002	B-6

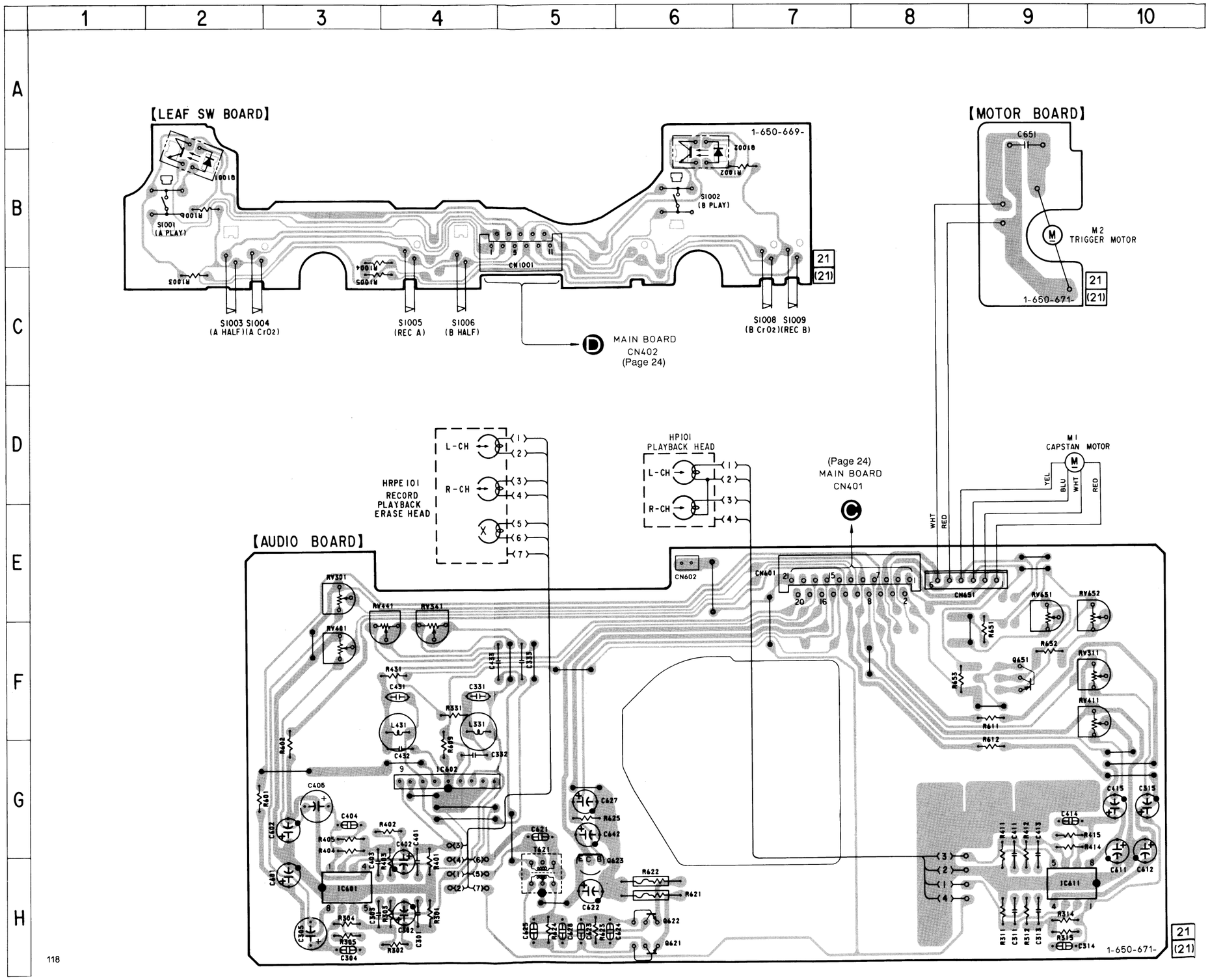

Note:

- ○——— : parts extracted from the component side.
- ▒▒▒ : Pattern on the side which is seen.

5-10. TAPE SECTION SCHEMATIC DIAGRAM

- See pages 54 to 58 for IC Block Diagrams.

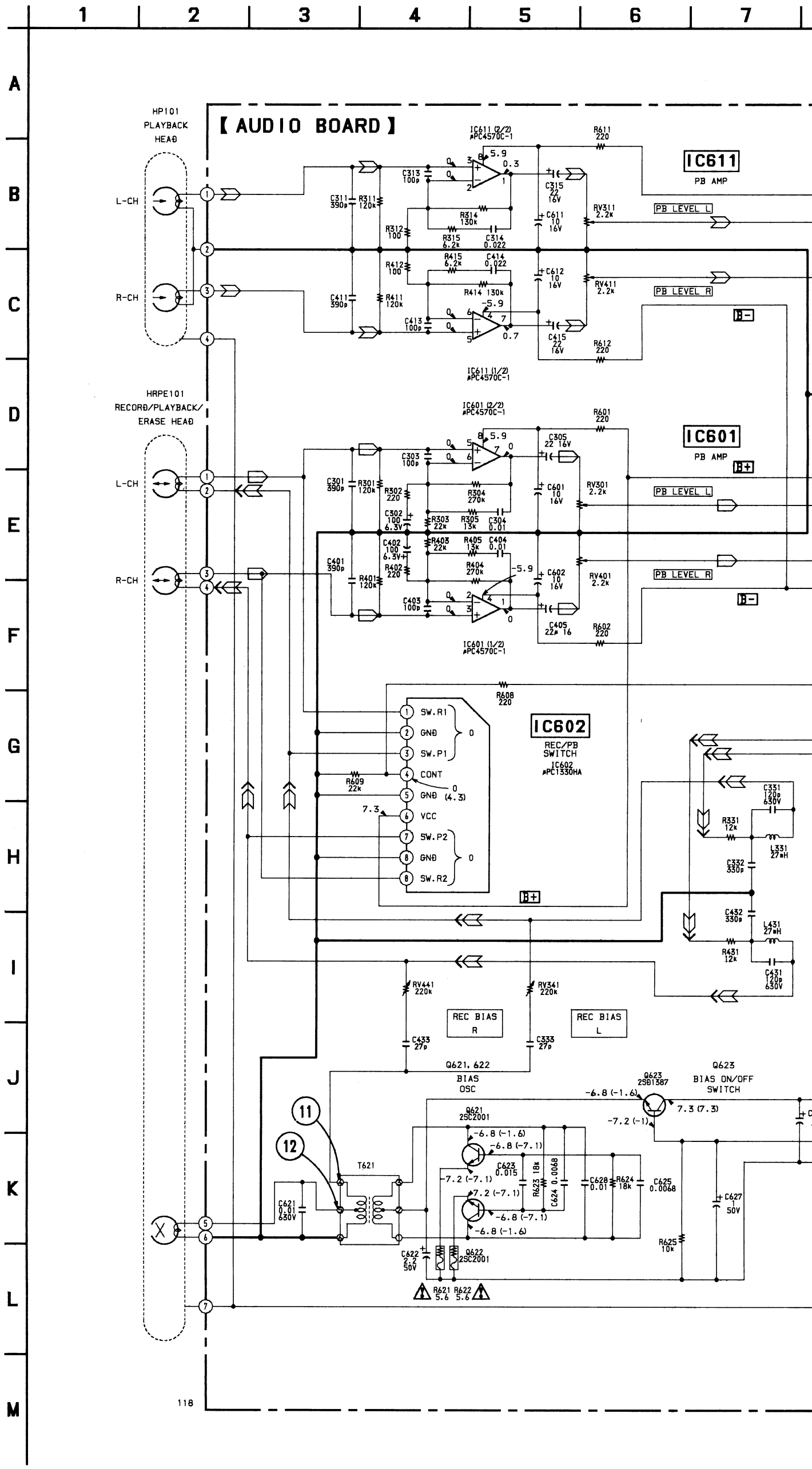

• Waveforms

⑪ T601 141 Vp-p 88.1 kHz

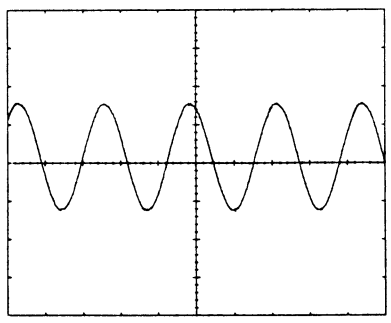

⑫ T621 39.2 Vp-p 88.1 kHz

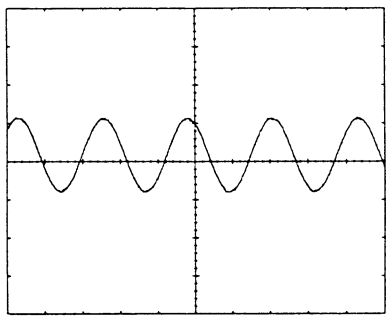

Note:

- All capacitors are in μF unless otherwise noted. pF: μμF 50 WV or less are not indicated except for electrolytics and tantalums.
- All resistors are in Ω and ¼ W or less unless otherwise specified.
- ⊸⊷ : fusible resistor.

Note:	Note:
The components identified by mark ⚠ or dotted line with mark ⚠ are critical for safety. Replace only with part number specified.	Les composants identifiés par une marque ⚠ sont critiques pour la sécurité. Ne les remplacer que par une pièce portant le numéro spécifié.

- B+ : B + Line.
- B− : B − Line.
- ▭ : adjustment for repair.
- Voltage and waveforms are dc with respect to ground under no-signal (detuned) conditions.
  no mark : PLAY (TC)
  ( ) : REC
- Voltages are taken with a VOM (Input impedance 10 MΩ). Voltage variations may be noted due to normal production tolerances.
- Waveforms are taken with a oscilloscope. Voltage variations may be noted due to normal production tolerances.
- Circled numbers refer to waveforms.
- Signal path.
  ▷ : PB (DECK A)
  ▷▷ : REC (DECK B)
  ▷ : PB (DECK B)

www.manualscenter.com

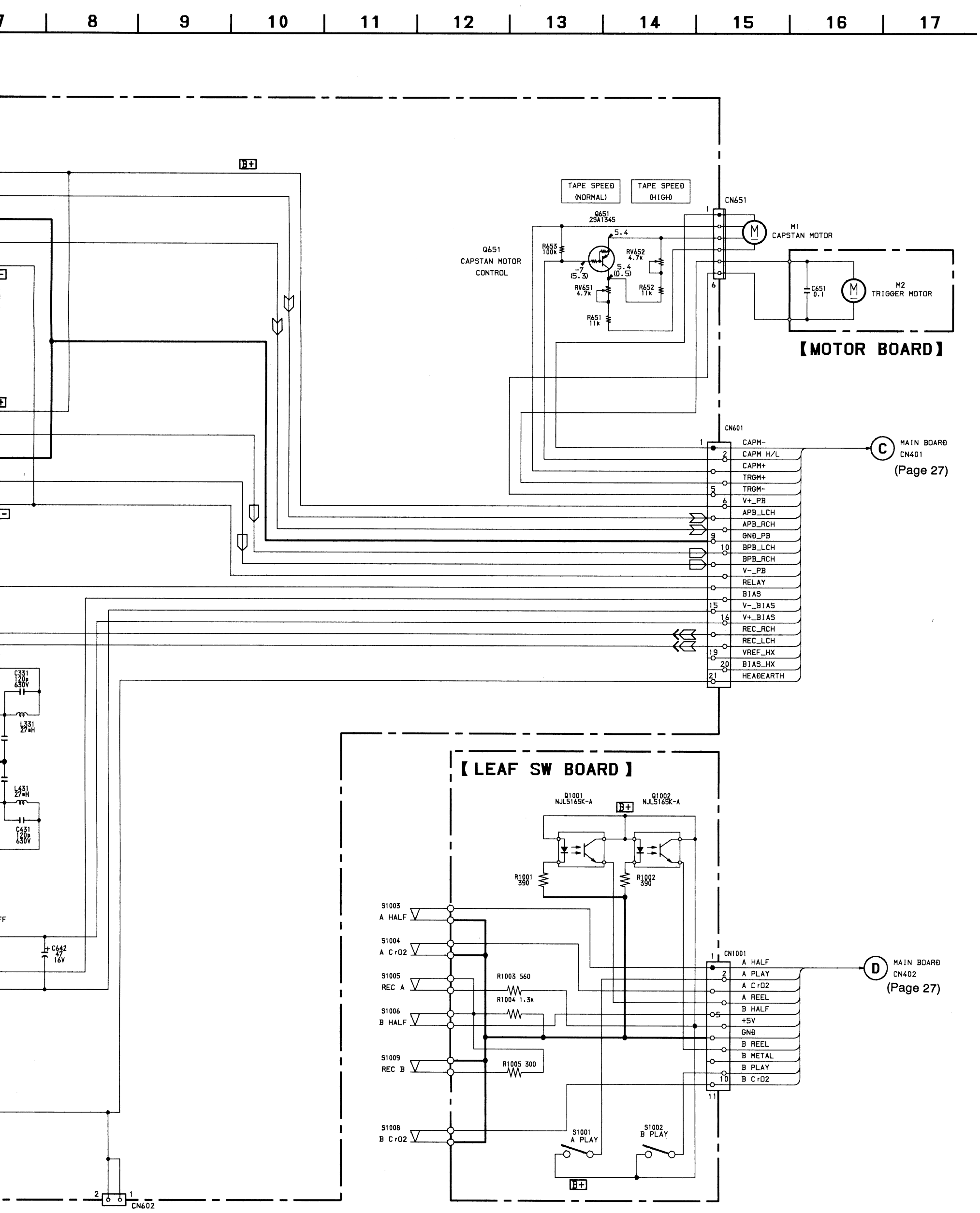

www.manualscenter.com

5-11. PANEL SECTION SCHEMATIC DIAGRAM

- See pages 54 to 58 for IC Block Diagrams.

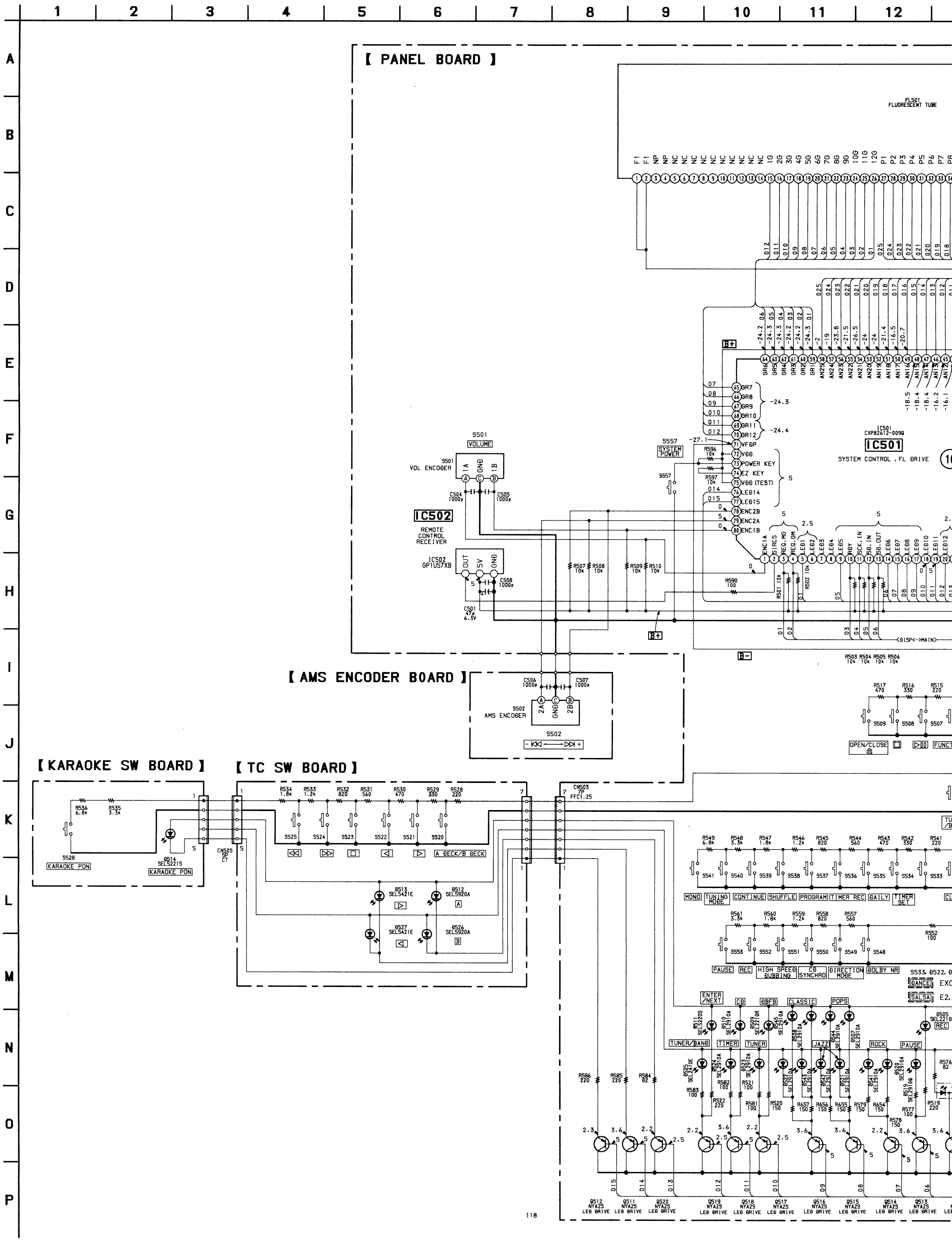

www.manualscenter.com

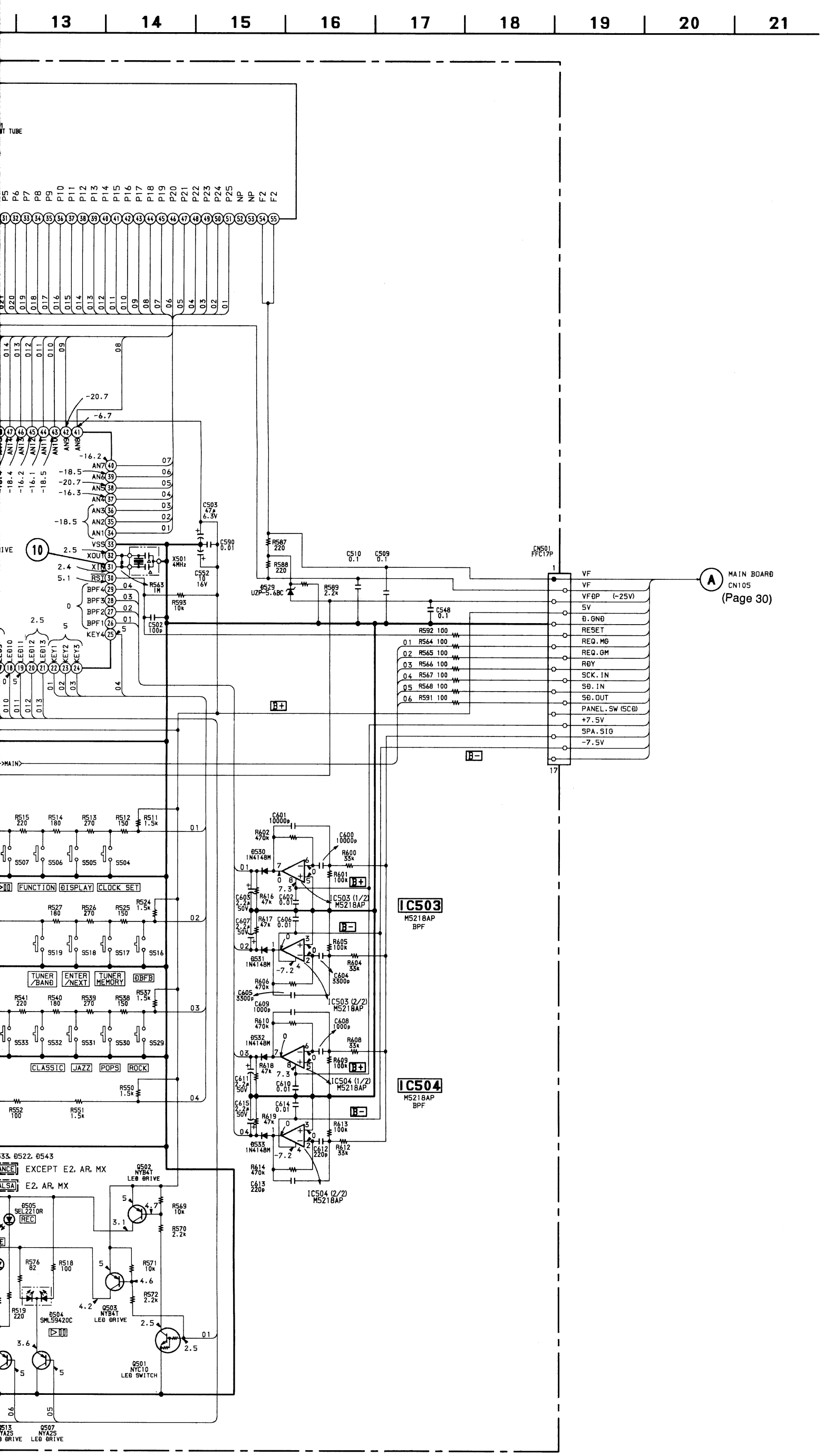

• **Waveform**

⑩ IC501 ㉛ 3.4 Vp-p 4 MHz

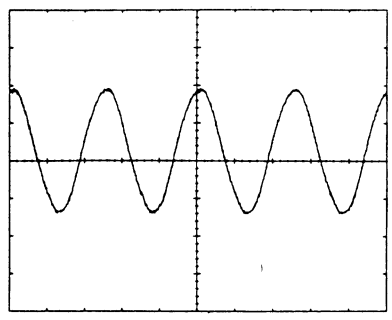

Note:

- All capacitors are in μF unless otherwise noted. pF: μμF 50 WV or less are not indicated except for electrolytics and tantalums.
- All resistors are in Ω and ¼ W or less unless otherwise specified.
- △ : internal component.
- B+ : B + Line.
- B− : B − Line.
- Voltage and waveforms are dc with respect to ground under no-signal (detuned) conditions.
  no mark : FM
- Voltages are taken with a VOM (Input impedance 10 MΩ).
  Voltage variations may be noted due to normal production tolerances.
- Waveforms are taken with a oscilloscope.
  Voltage variations may be noted due to normal production tolerances.
- Circled numbers refer to waveforms.
- Abbreviation
  AR : Argentine
  MX : Mexican

www.manualscenter.com

5-12. PANEL SECTION PRINTED WIRING BOARDS

- See page 22 for Circuit Boards Location and page 39 for Semiconductor Lead Layouts.

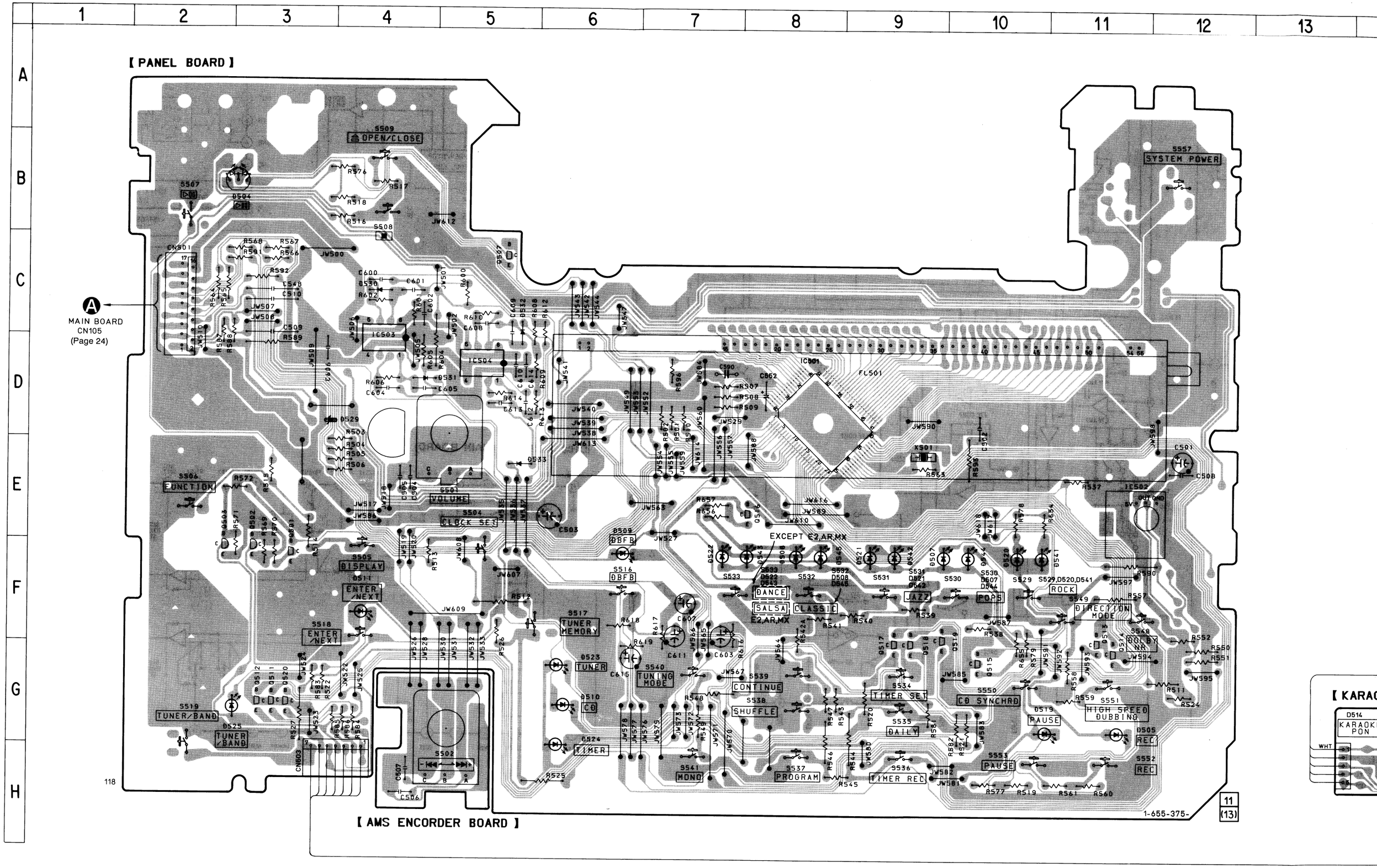

www.manualscenter.com

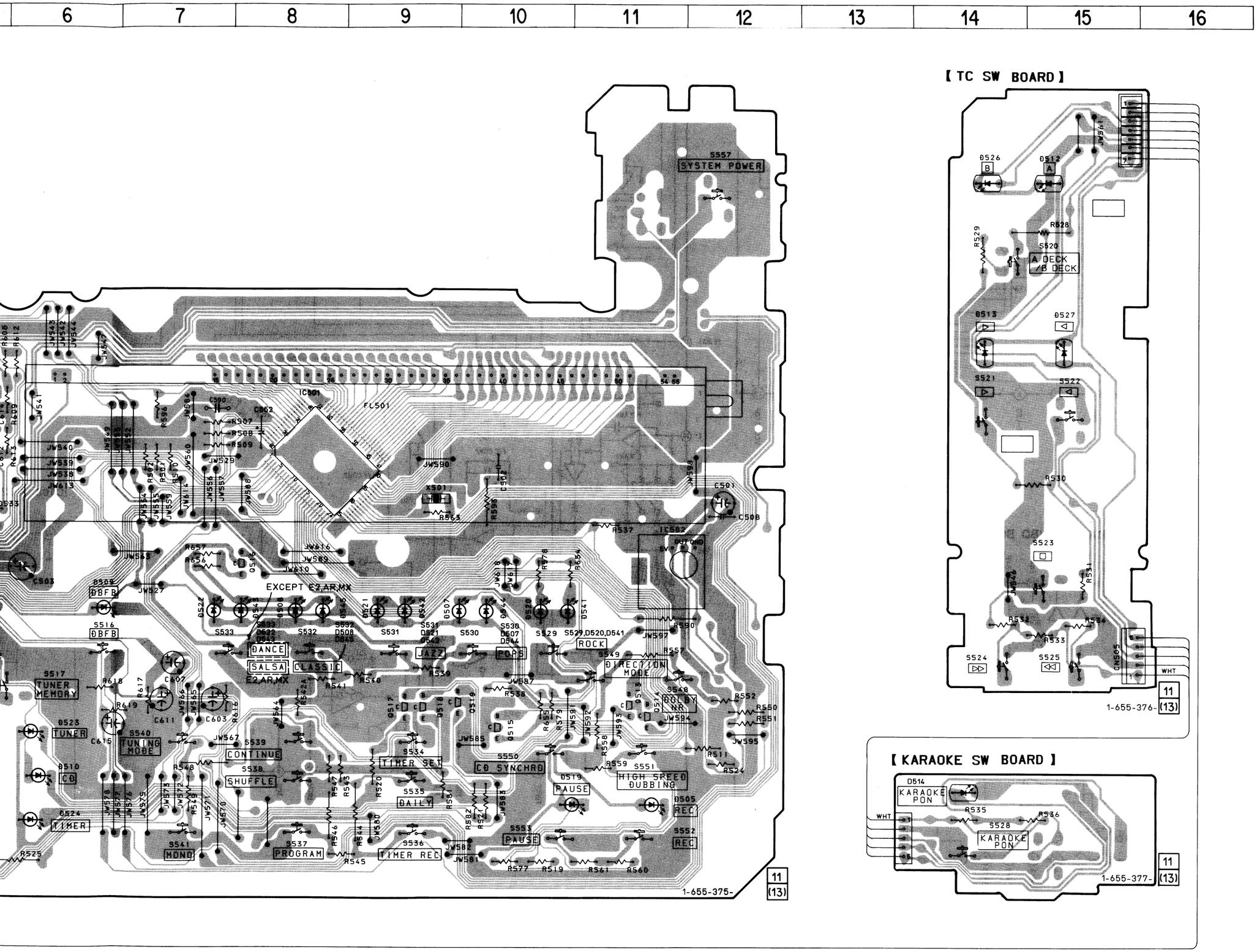

- **Semiconductor Location**

Ref. No.	Location
D504	B-3
D505	G-11
D507	F-9
D508	F-8
D509	F-6
D510	G-6
D511	F-4
D512	B-15
D513	C-14
D514	G-14
D519	G-10
D520	F-10
D521	F-9
D522	F-7
D523	G-6
D524	G-6
D525	G-3
D526	B-14
D527	C-15
D529	D-3
D530	C-4
D531	D-4
D532	C-5
D533	E-5
D541	F-10
D542	F-9
D543	F-8
D544	F-10
D545	F-8
IC501	D-8
IC502	E-11
IC503	D-4
IC504	D-5
Q501	F-3
Q502	F-3
Q503	F-2
Q507	C-5
Q511	G-3
Q512	G-3
Q513	F-11
Q514	G-11
Q515	G-10
Q516	E-8
Q517	F-9
Q518	F-9
Q519	F-9
Q520	G-3

Note:

- ○——— : parts extracted from the component side.
- ▒▒▒ : Pattern on the side which is seen.
- Abbreviation
  AR : Argentine
  MX : Mexican

www.manualscenter.com

• **IC Block Diagrams**

IC1, 2 TA7060AP (MAIN BOARD)

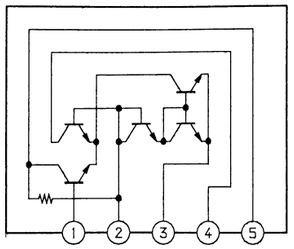

IC41 LA1835 (MAIN BOARD)

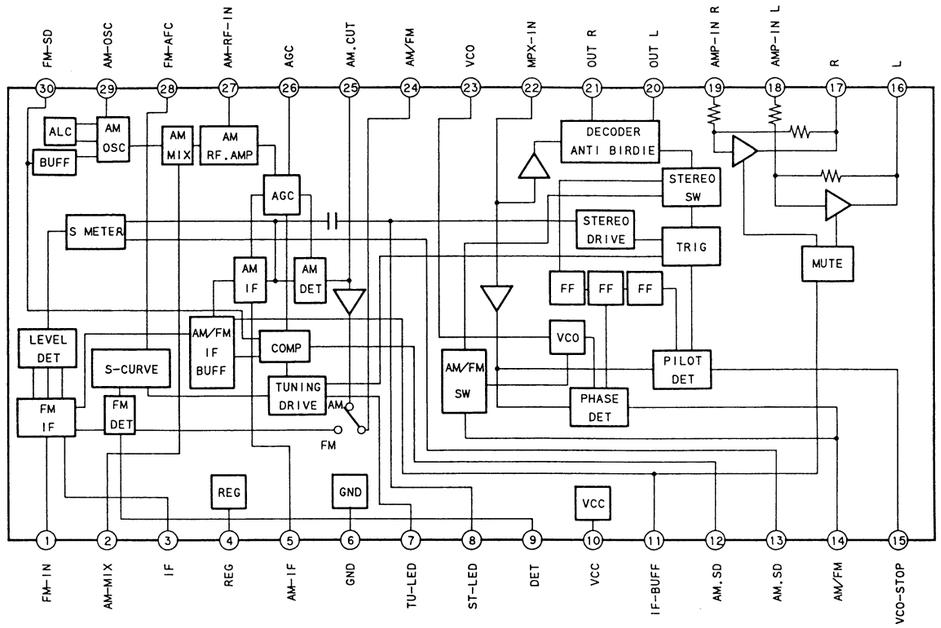

IC101 CXA1782BQ (BD BOARD)

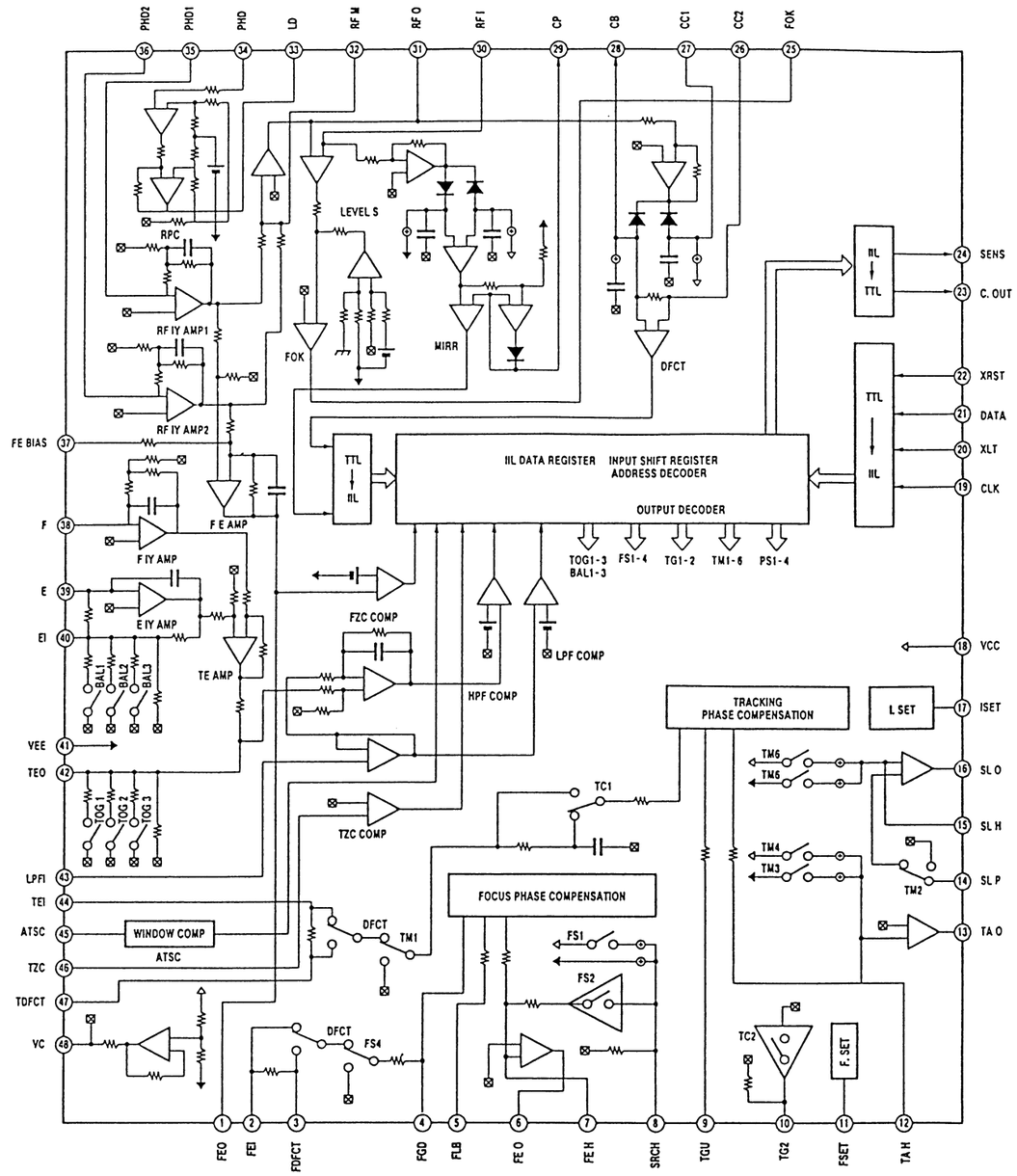

IC105, 402

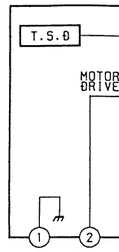

IC108 M624

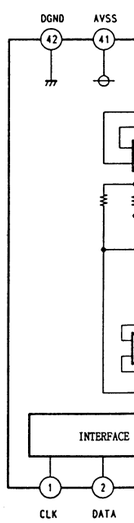

IC21 LC72130 (MAIN BOARD)

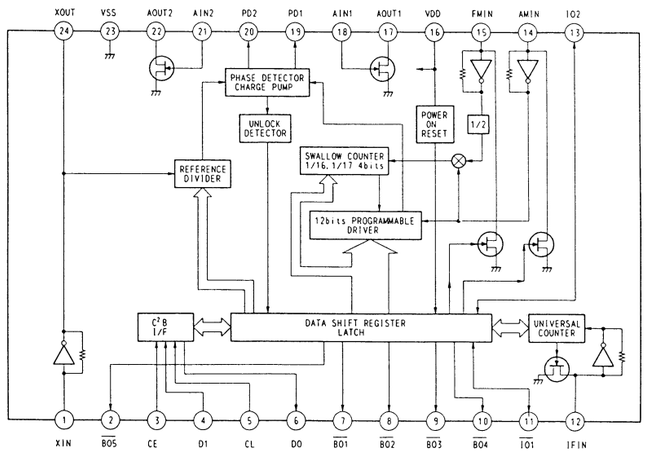

IC102 BA6397FP (BD BOARD)

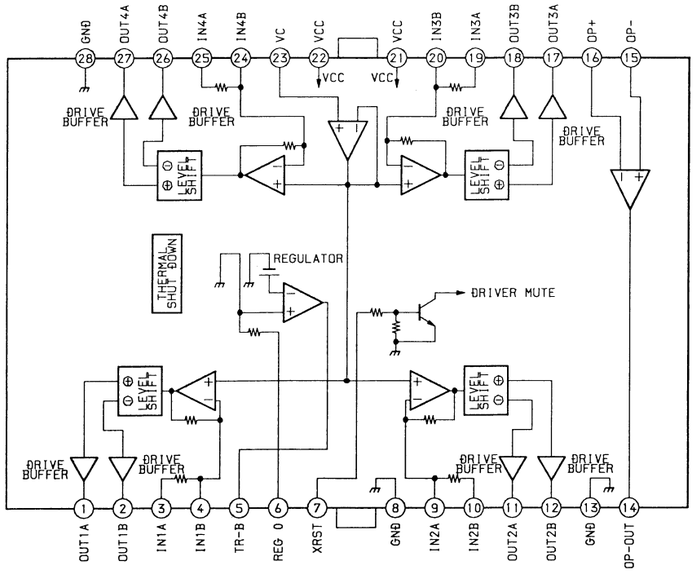

www.manualscenter.com

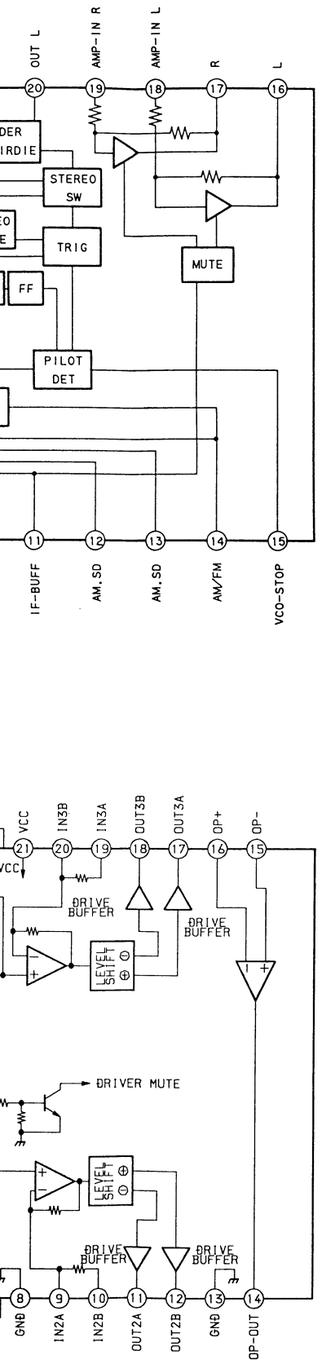

IC101 CXA1782BQ (BD BOARD)

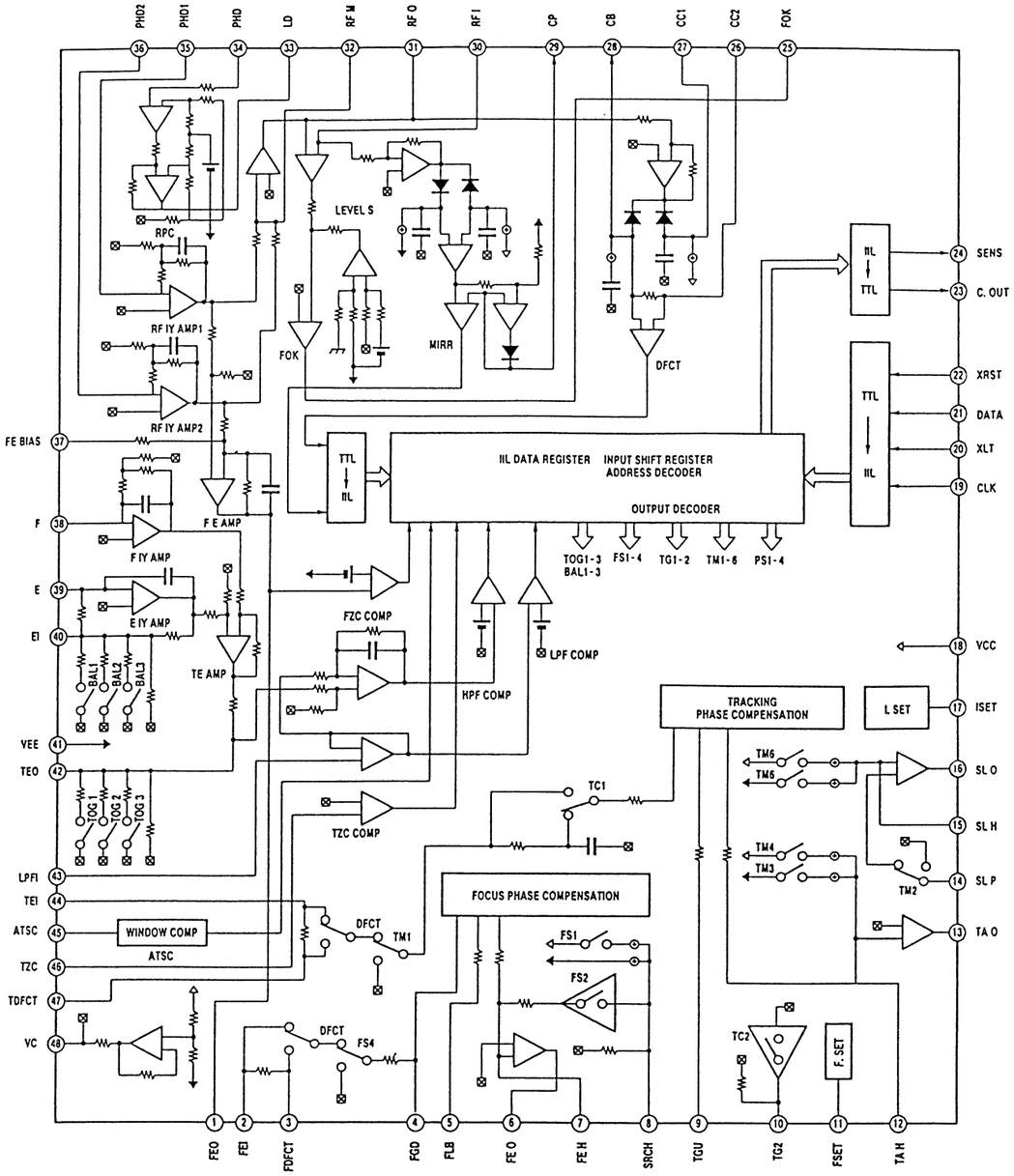

IC105, 402 LB1641 (MAIN BOARD)

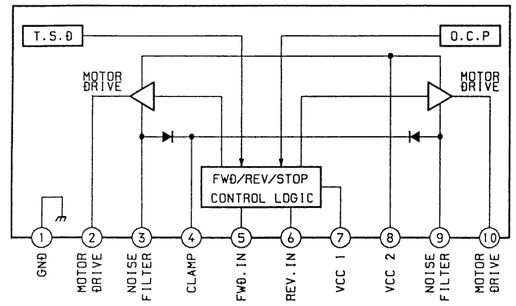

IC109 IC9210P (MAIN BOARD)

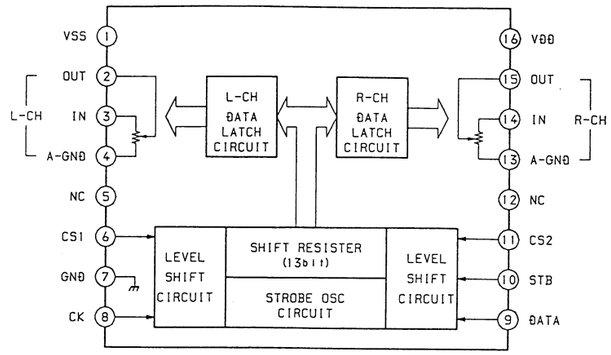

IC108 M62423FP (MAIN BOARD)

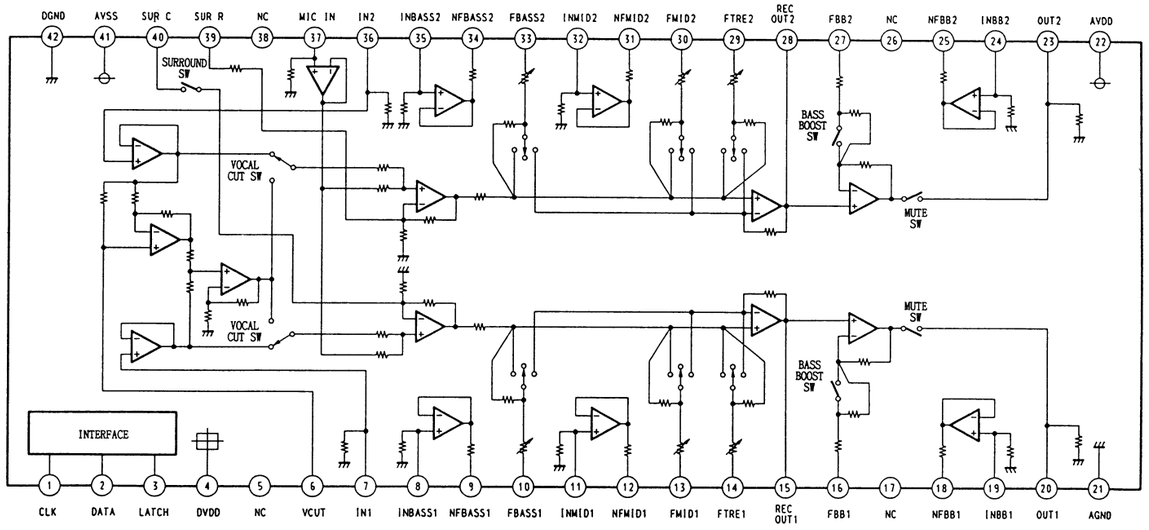

www.manualscenter.com

IC602 μPC1330HA (AUDIO BOARD)

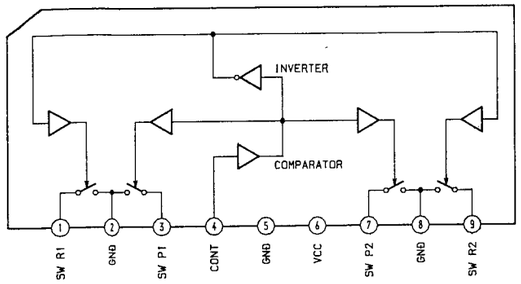

IC801 μPC1237HA (MAIN BOARD)

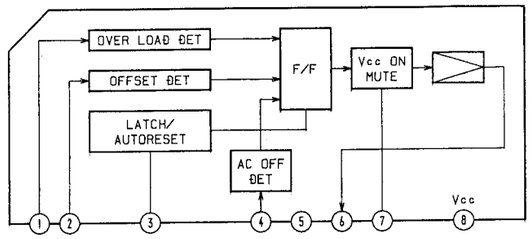

IC804 LA5617 (MAIN BOARD)

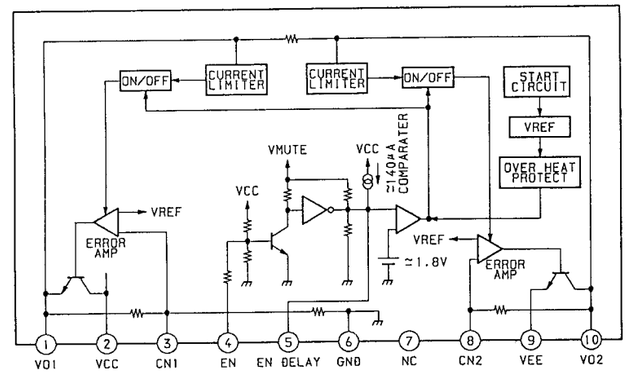

IC701 M65843FP (MAIN BOARD)

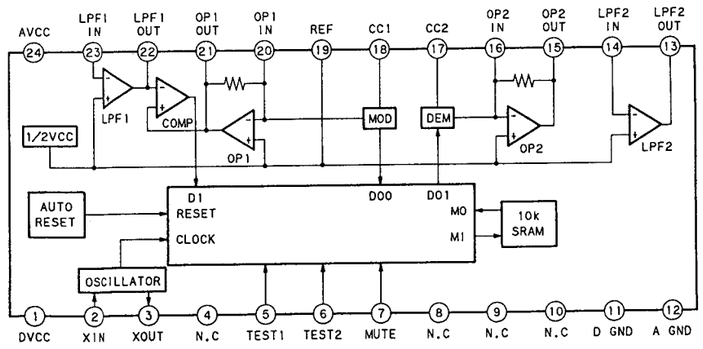

IC1701 IR3R42 (POLAR BOARD)

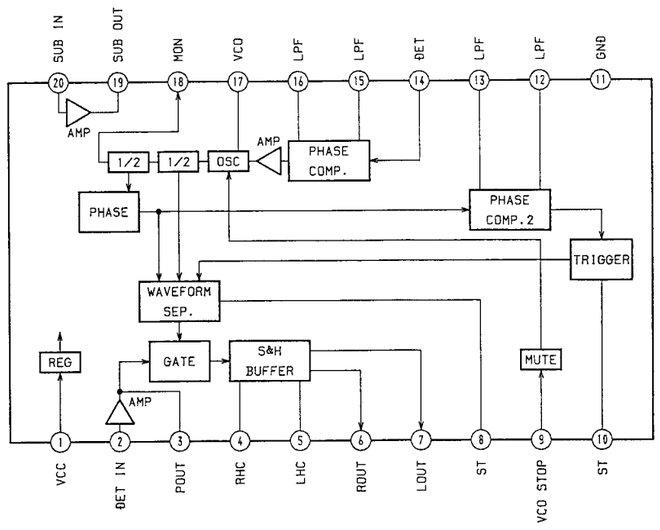

IC1703 MC14053BCP (POLAR BOARD)

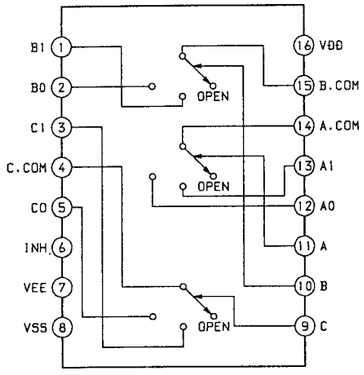

www.manualscenter.com

5-13. IC PIN FUNCTION

• IC101 TMP87CP64F-6254 (Main Board)

Pin No.	Pin Name	I/O	Function
1	VSS	—	GND
2	X OUT	O	System clock (8 MHz)
3	X IN	I	
4	$\overline{\text{AC. CUT}}$	I	Reset signal input
5	X OUT	O	Timer clock (32.768 MHz)
6	X IN	I	
7	GND	—	GND
8	$\overline{\text{BACK UP}}$	I	Backup mode input
9	COUNT SW	—	Not used (GND)
10	INIT SW	—	Not used (GND)
11	DISC SENS	—	Not used (GND)
12	MID SENS	—	Not used (GND)
13	CD XRST	O	CD reset output ("L": RESET)
14	POWER	O	Power on output ("L": ON)
15	MUTE	O	Muting output ("L": MUTE)
16	MPX	O	MPX CONTROL output
17	KEYCON LATCH	—	Not used (Open)
18	VOL LATCH	O	Latch output to volume controller
19	K. PON A	—	Not used (Open)
20	K. PON B	—	Not used (Open)
21	FUNC A	O	Function selector
22	FUNC B	O	
23	FUNC C	O	Not used (Open)
24	GEQ. LATCH	O	Latch output to volume controller (M62423P)
25	RDS. INT	—	Not used (Open)
26	SCOR (DSP)	I	Sub-code sync (SO+SI) detection input from DSP (CXD2507AQ)
27	SENS	I	SENS input from DSP (CXD2507AQ)
28	CD POWER	O	CD power on output ("H": ON)
29	CDG LATCH	—	Not used (Open)
30	D BFB	O	DBFB selector output ("H": DBFB LOW and "L": DBFB HIGH)
31	MUTE	O	TUNER MUTE output
32	CE	O	Chip enable output to TUNER PLL IC (LC72130)
33	STEREO	I	FM stereo identification ("L": Tuning)
34	TUNED	I	FM/AM tuning identification ("L": Tuning)
35	SQ-RDS-CLK	O	Sub-code Q data reading clock output to DSP (CXD2507AQ)
36	SQ-RDS-DI	I	Sub-code Q data input from DSP (CXD2507AQ)
37	RDS-RESET	—	Not used (Open)
38	CLK	O	System clock output
39	D. IN	I	Serial data input from TUNER
40	D. OUT	O	Serial data (common) output
41	TABLE SENS	—	Not used (Open)
42	REQ GM	I	Data TX request input to system controller
43	REQ MG	O	Data TX request output to system controller
44	CLK MG	O	Communication clock output to system controller
45	D. GM	I	Serial data input from system controller
46	D. MG	O	Serial data output to system controller
47	RDY	I/O	READY signal input/output from/to system controller ("L": Ready)
48	VAREF	—	Power supply (+5 V)
49	VASS	—	GND
50	VSS	—	GND

FUNCTION	FUNC A	FUNC B
ST	L	L
CD	L	H
TC	H	L
AUX	H	H

Pin No.	Pin Name	I/O	Function
51	VDD	—	Power supply (+5 V)
52	URGENT. SIG	I	Not used (+5 V)
53	URGENT. STBY	I	Not used (Open)
54	BUG Y/$\overline{\text{N}}$	—	Not used (Connected to GND)
55	ADJUSTOR	—	Not used ("H" status)
56	ADJUST2	—	Not used ("H" status)
57	MAGIC SPEED	—	Not used ("H" status)
58	SPEC	I	Specification identification input
59	DIST	I	Destination identification input
60	SPEED	—	Not used ("H" status)
61	BREAK	—	Not used ("H" status)
62	B-PLAY	I	Deck B PB switch input ("H": PLAY)
63	B-SHUT	I	Deck B reel table signal input
64	B-HALF	I	Input from REC prevention detecting hooks A and B on deck B
65	A-SHUT	I	Deck A reel table signal input
66	A-PLAY	I	Deck A PB switch input ("H": PLAY)
67	A-HALF	I	Deck A half switch input
68	CAPM H/L	O	Capstan motor speed selection ("H": Normal and "L": High speed)
69	CAPM ON/OFF	O	Capstan motor ON/OFF ("L": ON)
70	TRIG H/L	O	Trigger motor control output
71	B TRG	O	
72	A TRG	O	
73	RELAY	O	Control output to REC/PB selector switch (IC602) ("H": REC)
74	A/B	O	Dolby IC PB input deck A/B selector output ("L": A and "H": B)
75	NORM/HIGH	O	Normal/High speed EQ selector output ("H": High speed)
76	BIAS ON/OFF	O	Bias oscillator ON/OFF output ("H": ON)
77	RM ON/OFF	O	REC muting output ("L": MUTE)
78	REC/PB	O	Dolby IC REC/PB selector output ("H": REC)
79	NR	O	Dolby On/OFF output ("H": ON)
80	LM	O	Line muting output ("L": MUTE)
81	PASS	O	Bass amplifier switch output to Dolby IC (IC401)
82	CDG. MUTE	—	Not used (Open)
83	UP MOTOR	—	Not used (Open)
84	DOWN MOTOR	—	Not used (Open)
85	TABLE R	—	Not used (Open)
86	TABLE L	—	Not used (Open)
87	LOAD OUT	O	Loading motor (M903) load-out output
88	LOAD IN	O	Loading motor (M903) load-in output
89	DF-LATCH	O	Latch output to digital filter (PCM1701U)
90	XLT	O	Serial data latch output to DSP (CXD2507AQ)
91	FOCUS SW	O	High frequency gain suppression output to focusing servo controller (CXA1782EQ)
92	HIGH DUBB	—	Not used ("H" status)
93	TEST1	—	Not used ("H" status)
94	OUT SW	I	CD tray OUT detector input ("L": OUT)
95	IN SW	I	CD tray IN detector input ("L": IN)
96	UP SW	—	Not used (GND)
97	PANEL SW	—	Not used (GND)
98	CLOSE SW	—	Not used (GND)
99	OPEN SW	—	Not used (GND)
100	VDD	—	Power supply (+5 V)

- **IC501 CXP82612-0090 (Panel Board)**

Pin No.	Pin Name	I/O	Function
1	ENCIA	I	Volume encoder input
2	SIRCS	I	Infrared remote commander signal input
3	REQ. MG	I	Data TX request input from master controller
4	REQ. GM	O	Data TX request output to master controller
5	LED1	O	LED driver output
6	LED2	—	Not used (Open)
7	LED3	—	Not used (Open)
8	LED4	—	Not used (Open)
9	LED5	O	PLAY and PAUSE LED output
10	RDY	I/O	READY signal input/output from/to master controller ("L": Ready)
11	SCK. IN	I	Clock input for communication to master controller
12	SD. IN	I	Serial data input from master controller
13	SD. OUT	O	Serial data output to master controller
14	LED6	O	REC and PAUSE LED output
15	LED7	O	ROCK LED output
16	LED8	O	POPS and JAZZ LED output
17	LED9	O	CLASSIC and DANCE (SALSA) LED output
18	LED10	O	DBFB and TUNER LED output
19	LED11	O	CD and TIMER LED output
20	LED12	O	ENTER/NEXT and TUNER/BAND LED output
21	LED13	O	A and B LED output
22	KEY1	I	Key input (A/D conversion)
23	KEY2	I	
24	KEY3	I	
25	KEY4	I	
26	BPF1	I	Spectrum analyzer signal input: BPF1 150 Hz; BPF2 460 Hz; BPF3 1.5 kHz; BPF4 6.6 kHz
27	BPF2	I	
28	BPF3	I	
29	BPF4	I	
30	$\overline{RST}$	I	Reset signal input
31	X IN	I	System clock (4 MHz)
32	X OUT	O	
33	VSS	—	GND
34	AN1	O	Driving FL display panel
35	AN2	O	
36	AN3	O	
37	AN4	O	
38	AN5	O	
39	AN6	O	
40	AN7	O	

Pin No.	Pin Name	I/O	Function
41	AN8	O	Driving FL display panel
42	AN9	O	
43	AN10	O	
44	AN11	O	
45	AN12	O	
46	AN13	O	
47	AN14	O	
48	AN15	O	
49	AN16	O	
50	AN17	O	
51	AN18	O	
52	AN19	O	
53	AN20	O	
54	AN21	O	
55	AN22	O	
56	AN23	O	
57	AN24	O	
58	AN25	O	
59	GR1	O	
60	GR2	O	
61	GR3	O	
62	GR4	O	
63	GR5	O	
64	GR6	O	
65	GR7	O	
66	GR8	O	
67	GR9	O	
68	GR10	O	
69	GR11	O	
70	GR12	O	
71	VFDP	—	− 25 V driving power for FL display panel
72	VDD	—	Power supply (+5 V)
73	POWER KEY	I	System power key input
74	EZ KEY	—	Not used (Open)
75	VDD	—	Power supply (+5 V)
76	LED14	O	FWD play and RVS play LED output
77	LED15	O	Karaoke-pon LED input
78	ENC 2B	I	AMS encoder input
79	ENC 2A	I	
80	ENC 1B	I	Volume encoder input

www.manualscenter.com

SECTION 6
EXPLODED VIEWS

NOTE:

- -XX and -X mean standardized parts, so they may have some difference from the original one.
- Color Indication of Appearance Parts
  Example:
  KNOB, BALANCE (WHITE) . . . (RED)
  ↑ Parts Color ↑ Cabinet's Color
- Items marked "*" are not stocked since they are seldom required for routine service. Some delay should be anticipated when ordering these items.
- The mechanical parts with no reference number in the exploded views are not supplied.
- Hardware (# mark) list and accessories and packing materials are given in the last of the electrical parts list.

The components identified by mark ⚠ or dotted line with mark ⚠ are critical for safety.
Replace only with part number specified.

Les composants identifiés par une marque ⚠ sont critiques pour la sécurité.
Ne les remplacer que par une pièce portant le neméro spécifié.

- Abbreviation

CND: Canadian	G: German	AUS: Australian	IT: Italian
EE: East European	SP: Singapore	MY: Malaysia	MX: Mexican
HK: Hong Kong	AR: Argentine	EA: Saudi Arabia	

(1) CASE, POWER SECTION

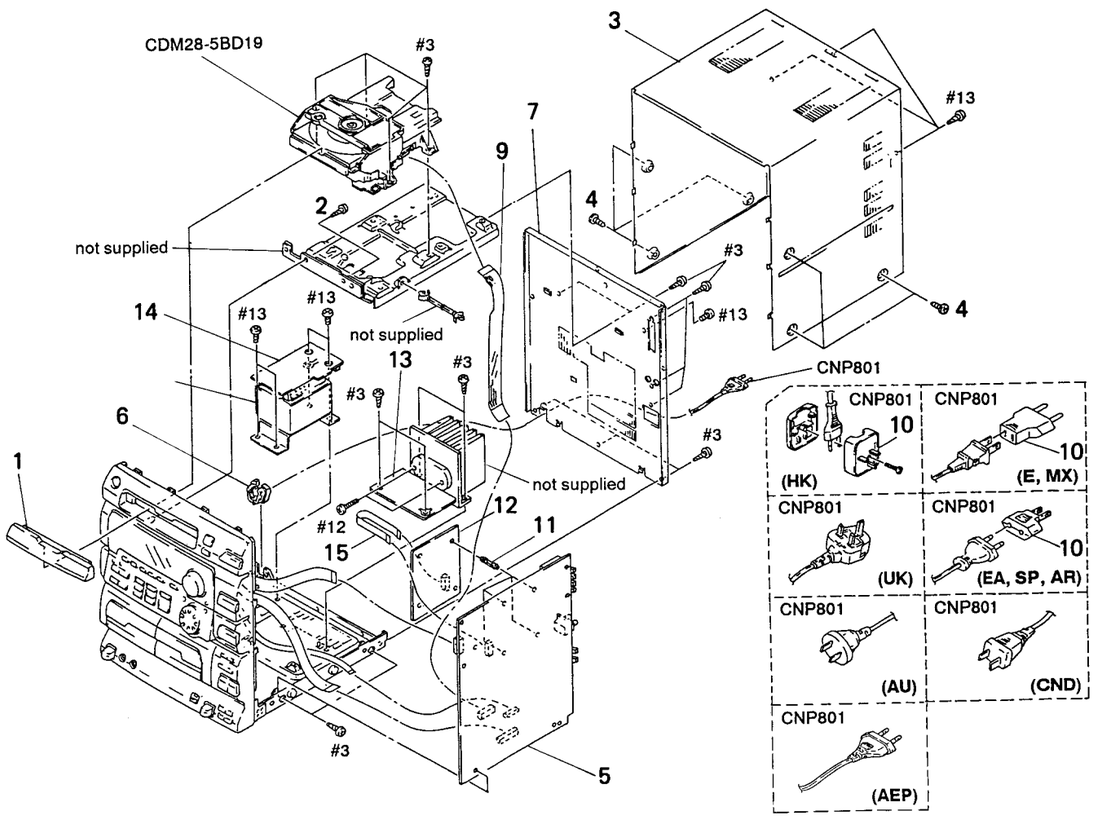

Ref. No.	Part No.	Description	Remark
1	4-971-955-01	PANEL, LOADING	
2	4-951-620-01	SCREW (2.6X8), +BVTP	
3	4-971-899-11	CASE	
4	3-363-099-01	SCREW (CASE 3 TP2)	
* 5	A-4377-366-A	MAIN BOARD, COMPLETE (E2, MX, AR)	
* 5	A-4377-367-A	MAIN BOARD, COMPLETE (E3, MY, SP, HK)	
* 5	A-4377-368-A	MAIN BOARD, COMPLETE (EA)	
* 5	A-4377-369-A	MAIN BOARD, COMPLETE (AUS)	
* 5	A-4377-373-A	MAIN BOARD, COMPLETE (CND)	
* 5	A-4377-383-A	MAIN BOARD, COMPLETE (AE1)	
* 5	A-4377-384-A	MAIN BOARD, COMPLETE (EE)	
* 5	A-4377-385-A	MAIN BOARD, COMPLETE (CIS)	
* 5	A-4377-386-A	MAIN BOARD, COMPLETE (AE2)	
* 5	A-4377-388-A	MAIN BOARD, COMPLETE (IT)	
* 5	A-4377-389-A	MAIN BOARD, COMPLETE (UK2)	
* 5	A-4377-950-A	MAIN BOARD, COMPLETE (UK1)	
* 5	A-4377-387-A	MAIN BOARD, COMPLETE (G)	
* 6	3-703-244-00	BUSHING (2104), CORD (EXCEPT E, MX)	
6	3-703-571-11	BUSHING (S) (4516), CORD (E, MX)	
* 7	4-970-471-01	PANEL, BACK (E)	
* 7	4-970-471-11	PANEL, BACK (EA)	
* 7	4-970-471-21	PANEL, BACK (AUS)	
* 7	4-970-471-31	PANEL, BACK (MX)	
* 7	4-970-471-41	PANEL, BACK (MY)	
* 7	4-970-471-51	PANEL, BACK (SP)	
* 7	4-970-471-61	PANEL, BACK (AR)	
* 7	4-970-471-71	PANEL, BACK (HK)	
* 7	4-970-473-01	PANEL, BACK (AE1)	
* 7	4-970-473-11	PANEL, BACK (AE2, G)	
* 7	4-970-473-21	PANEL, BACK (IT)	
* 7	4-970-473-41	PANEL, BACK (UK2)	
* 7	4-970-473-51	PANEL, BACK (EE)	
* 7	4-970-473-61	PANEL, BACK (CND)	
* 7	4-970-473-71	PANEL, BACK (CIS)	
* 7	4-970-473-81	PANEL, BACK (UK1)	
8	4-949-235-01	HOOK	
9	1-654-751-21	FLEXIBLE BOARD	
⚠10	1-569-007-11	ADAPTER, CONVERSION 2P (E3)	
⚠10	1-569-008-11	ADAPTER, CONVERSION 2P (EA, SP, AR)	
⚠10	1-770-019-11	ADAPTOR, CONVERSION (HK)	
* 11	4-965-065-01	HOLDER, PCB (CIS)	
* 12	A-4377-454-A	POLAR BOARD, COMPLETE (CIS)	
* 13	A-4377-364-A	POWER BOARD, COMPLETE (E, AUS, EA, MX, MY, SP, HK, AR)	
* 13	A-4377-370-A	POWER BOARD, COMPLETE (CND)	
* 13	A-4377-376-A	POWER BOARD, COMPLETE (AE1, EE, CIS)	
* 13	A-4377-377-A	POWER BOARD, COMPLETE (AE2, UK, IT)	
* 13	A-4377-708-A	POWER BOARD, COMPLETE (G)	
* 14	1-655-380-11	TRANSFORMER BOARD	
15	1-590-036-31	WIRE (FLAT TYPE) (13 CORE) (CIS)	
⚠CNP801	1-575-651-11	CORD, POWER (AEP, G, IT, EE, EA, CIS, AR, HK, MY, SP)	
⚠CNP801	1-575-653-11	CORD, POWER (E, MX)	
⚠CNP801	1-690-609-21	CORD, POWER (CND)	
⚠CNP801	1-696-847-11	CORD, POWER (AUS)	
⚠CNP801	1-751-520-21	CORD, POWER (UK)	
⚠T801	1-427-793-12	TRANSFORMER, POWER (E, EA, AR, HK, MX, MY, SP, AUS)	
⚠T801	1-427-801-12	TRANSFORMER, POWER (AEP, G, IT, EE, UK, CIS)	
⚠T801	1-427-813-12	TRANSFORMER, POWER (CND)	

www.manualscenter.com

(2) MECHANISM DECK CHASSIS SECTION

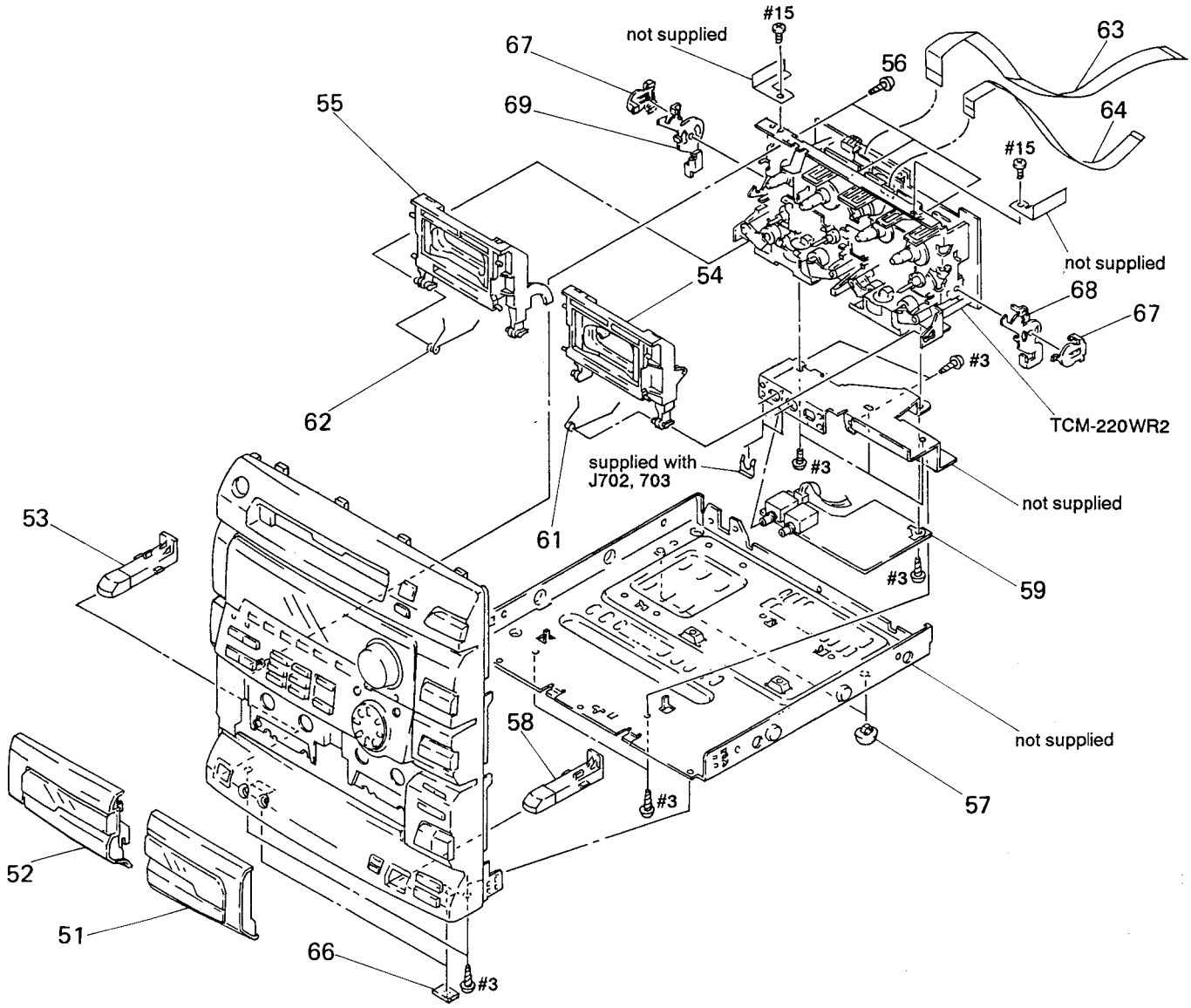

Ref. No.	Part No.	Description	Remark
51	X-4945-668-1	LID (B) ASSY, CASSETTE	
52	X-4945-667-1	LID (A) ASSY, CASSETTE	
53	4-971-956-01	BUTTON (EJ-A)	
54	X-4945-691-1	HOLDER (R) ASSY, CASSETTE	
55	X-4945-690-1	HOLDER (L) ASSY, CASSETTE	
56	4-951-620-01	SCREW (2.6X8), +BVTP	
57	4-965-822-12	FOOT	
58	4-971-957-01	BUTTON (EJ-B)	
* 59	1-655-379-11	HP BOARD	
61	4-959-232-11	SPRING (R), TORSION	
62	4-959-231-11	SPRING (L), TORSION	
63	1-769-689-11	WIRE (FLAT TYPE) (21 CORE)	
64	1-769-688-11	WIRE (FLAT TYPE) (11 CORE)	
66	4-930-336-81	FOOT (FELT)	
67	3-354-957-01	JOINT (LOCK LEVER)	
* 68	4-965-877-11	LEVER (LOCK LEVER R)	
69	3-367-709-21	LEVER (LOCK LEVER L)	

(3) FRONT PANEL SECTION

■ A: AMS ENCODER BOARD

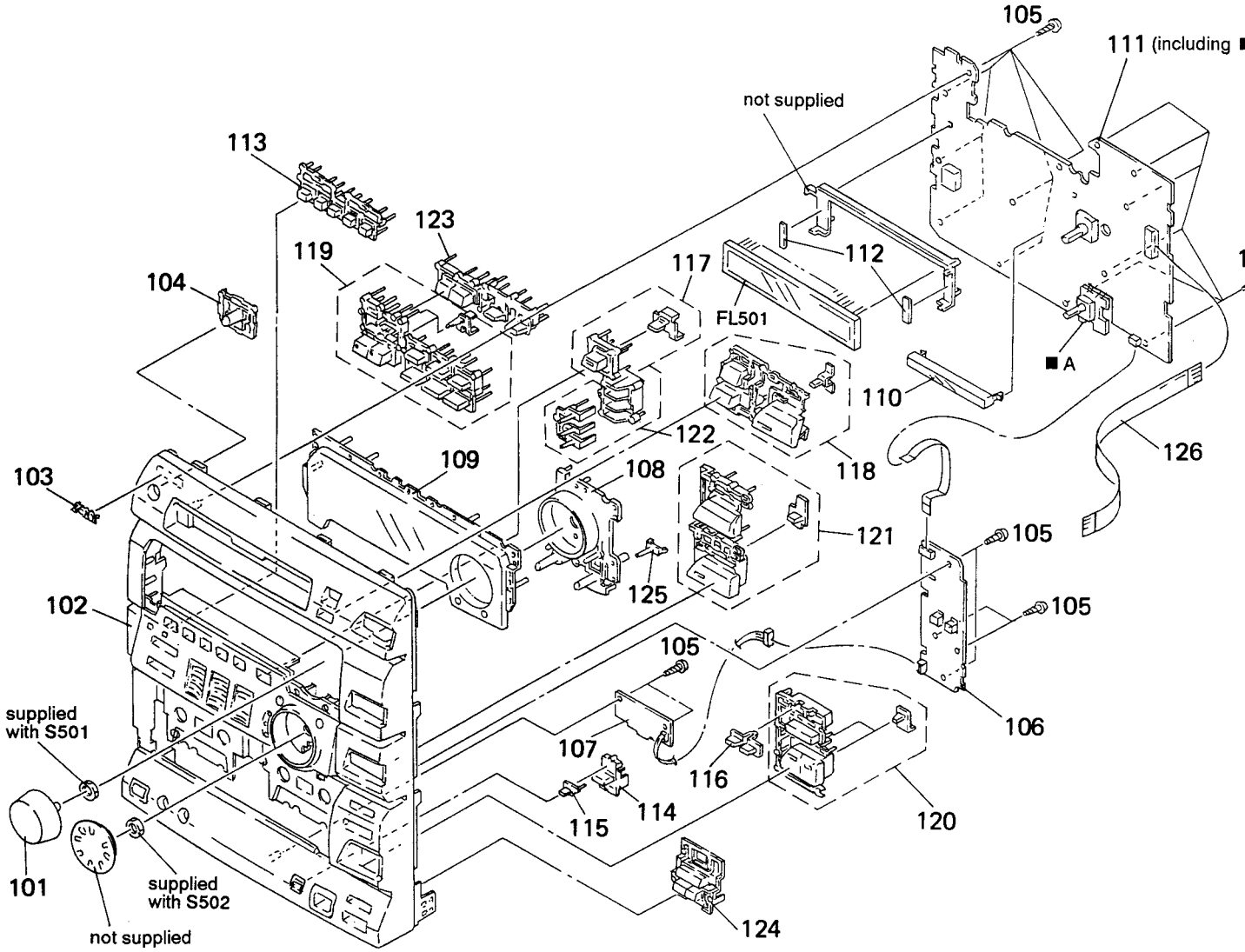

Ref. No.	Part No.	Description	Remark
101	4-970-844-11	KNOB (VOL) (UK1)	
101	4-973-774-01	KNOB (VOL) (EXCEPT UK1)	
102	4-971-958-01	PANEL, FRONT (AEP, UK, G, IT, EE, CIS)	
102	4-971-958-11	PANEL, FRONT (E, AUS, EA, MX, MY, SP, HK, AR)	
102	4-971-958-21	PANEL, FRONT (CND)	
103	4-962-708-11	EMBLEM (4-A), SONY	
104	4-971-913-01	BUTTON (POWER)	
105	4-951-620-01	SCREW (2.6X8), +BVTP	
* 106	1-655-376-11	TC SW BOARD	
* 107	1-655-377-11	KARAOKE SW BOARD	
108	4-970-867-11	BRACKET (VOLUME)	
109	4-970-876-11	WINDOW (FLD), INDICATION	
110	4-970-853-11	HOUSE, LAMP	
* 111	A-4377-374-A	PANEL BOARD, COMPLETE (EXCEPT AE2, UK, IT, G)	
* 111	A-4377-375-A	PANEL BOARD, COMPLETE (AE2, UK, IT)	
* 111	A-4377-707-A	PANEL BOARD, COMPLETE (G)	

Ref. No.	Part No.	Description	Remark
* 112	4-932-810-11	CUSHION (FL)	
113	4-970-865-11	BUTTON (EQ) (EXCEPT E2, MX, AR)	
113	4-970-865-21	BUTTON (EQ) (E2, MX, AR)	
114	4-970-880-11	BUTTON (KARAOKE)	
115	4-970-881-11	INDICATOR (KARAOKE)	
116	4-970-882-11	INDICATOR (A/B)	
117	X-4945-682-1	BUTTON (DBFB) ASSY	
118	X-4945-671-1	BUTTON (CD) ASSY	
119	X-4945-681-1	BUTTON (B) ASSY	
120	X-4945-676-1	BUTTON (TC-PLAY) ASSY	
121	X-4945-672-1	BUTTON (F/T) ASSY	
122	4-970-873-11	INDICATOR (JOG)	
123	4-970-863-11	BUTTON (A)	
124	4-972-642-01	BUTTON (TC-STOP)	
125	4-970-872-11	INDICATOR (E/N)	
126	1-769-690-11	WIRE (FLAT TYPE) (17 CORE)	
FL501	1-517-341-21	INDICATOR TUBE, FLUORESCENT	

www.manualscenter.com

(4) MECHANISM DECK SECTION-1 (TCM-220WR2)

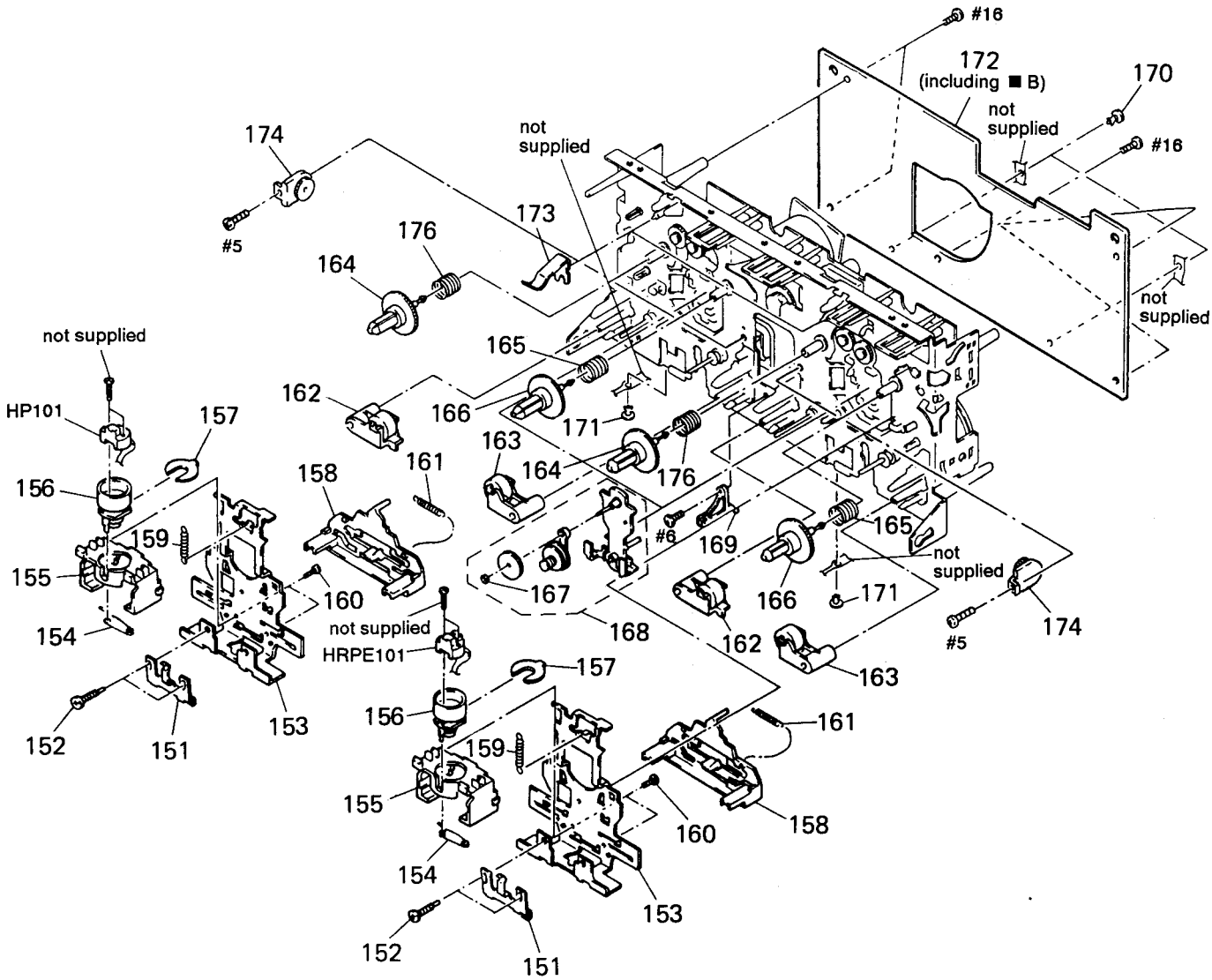

Ref. No.	Part No.	Description	Remark
151	3-908-560-01	SPRING, AZIMUTH ADJUSTMENT	
152	3-908-561-01	SCREW	
* 153	X-3367-584-2	SLIDER (HEAD) ASSY	
154	3-908-556-01	SPRING, HEAD TOGGLE	
155	3-908-558-02	FITTING BLOCK, HEAD	
156	3-908-557-02	ROTARY BLOCK, HEAD	
* 157	3-908-559-01	STOPPER, AZIMUTH	
158	3-908-555-01	SLIDER (REV SLIDER)	
159	3-917-143-01	SPRING, TENSION	
160	3-388-848-01	SCREW (P2X6) (B TIGHT)	
161	3-911-113-01	SPRING, TENSION	
162	X-3367-589-1	PINCH LEVER (REV) ASSY	
163	X-3367-588-1	PINCH LEVER (FWD) ASSY	
164	3-908-613-01	GEAR (S), REEL	

Ref. No.	Part No.	Description	Remark
165	3-917-142-01	SPRING, COMPRESSION	
166	X-3367-594-1	REEL (T) ASSY	
167	3-669-465-01	WASHER (1.5), STOPPER	
168	X-3370-173-1	TU ASSY	
* 169	3-908-611-01	FULCRUM, HOLDER	
170	3-911-116-11	RIVET, PUSH	
171	3-911-116-21	RIVET, PUSH	
* 172	A-2007-253-A	AUDIO BOARD, COMPLETE	
173	3-915-490-01	DETENT, HALF	
174	3-354-963-01	DAMPER	
176	3-917-141-01	SPRING, COMPRESSION	
HP101	1-500-093-11	HEAD, MAGNETIC (PLAYBACK) (DECK-A)	
HRPE101	1-500-094-11	HEAD, MAGNETIC (REC/PB/ERASE) (DECK-B)	

www.manualscenter.com

(5) MECHANISM DECK SECTION-2 (TCM-220WR2)

■ B: MOTOR BOARD

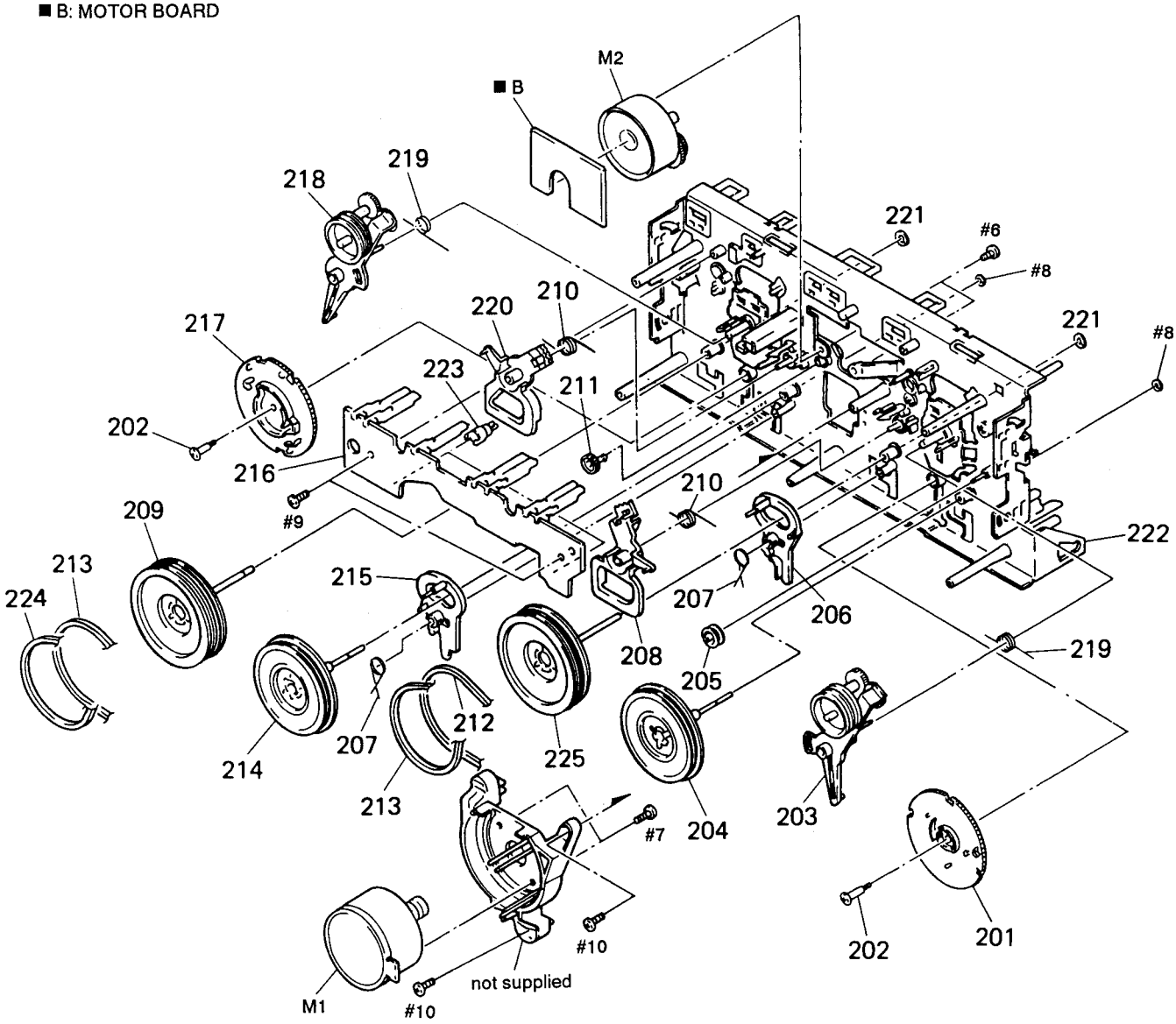

Ref. No.	Part No.	Description	Remark
201	3-908-597-01	CAM (A)	
202	3-908-608-01	SCREW, STEP	
203	X-3367-590-2	ARM (A) ASSY, FR	
204	X-3370-169-1	FLYWHEEL (AR) ASSY	
205	3-908-610-01	PULLEY, TENSION	
206	3-908-599-01	LEVER (REV-A)	
207	3-908-601-01	SPRING (REV LEVER), TORSION	
208	3-908-603-01	LEVER (TRIGGER A)	
209	X-3370-170-1	FLYWHEEL (BF) ASSY	
210	3-908-605-01	SPRING (TRIGGER), TORSION	
211	3-908-609-01	GEAR, TRIGGER	
212	3-913-845-01	BELT (A)	
213	3-913-846-01	BELT (FR)	
214	X-3370-171-1	FLYWHEEL (BR) ASSY	
215	3-908-600-01	LEVER (REV-B)	
* 216	1-650-669-21	LEAF SW BOARD	
217	3-908-598-01	CAM (B)	
218	X-3367-591-2	ARM (B) ASSY, FR	
219	3-911-114-01	SPRING (FR), TORSION	
220	3-908-604-01	LEVER (TRIGGER B)	
221	3-911-115-01	WASHER, STOPPER	
222	X-3367-587-1	CHASSIS ASSY, MECHANICAL	
223	3-381-776-01	HOLDER (LED)	
224	3-917-176-01	BELT (B)	
225	X-3370-172-1	FLYWHEEL (AF) ASSY	
M1	X-3369-110-1	MOTOR ASSY (CAPSTAN)	
M2	X-3369-111-1	MOTOR ASSY (TRIGGER)	

www.manualscenter.com

(6) CD MECHANISM SECTION-1 (CDM28-5BD19)

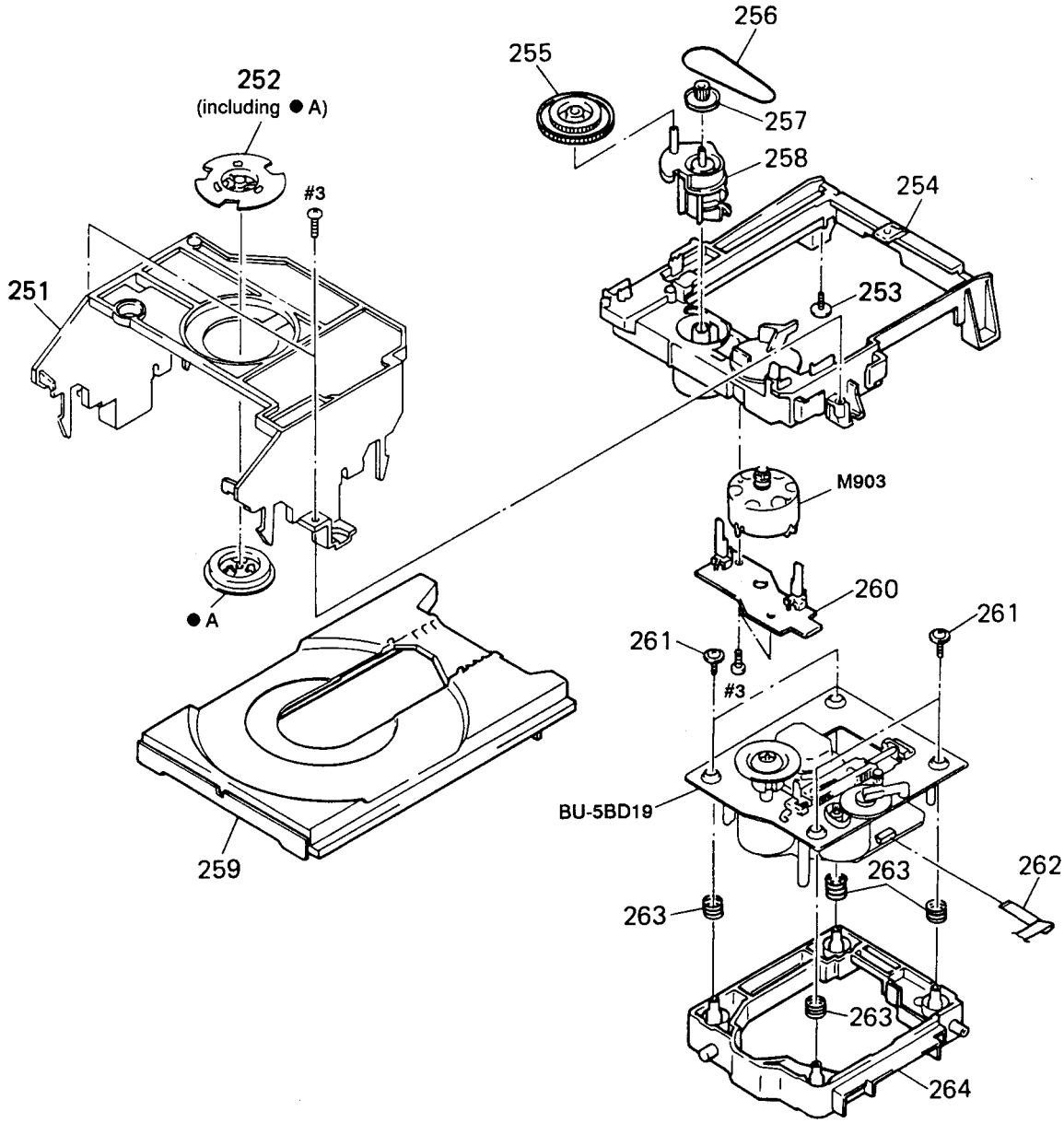

Ref. No.	Part No.	Description	Remark
251	4-960-835-01	HOLDER (M)	
252	1-452-719-11	MAGNET ASSY	
253	4-917-583-21	BRACKET, YOKE	
254	4-960-838-03	BASE (MD)	
255	4-960-842-01	GEAR (P)	
256	4-927-649-01	BELT	
257	4-960-841-01	PULLEY (S)	
* 258	4-960-839-01	CAM	
259	4-960-836-01	TABLE, DISC	
* 260	1-650-836-11	LOADING BOARD	
261	4-933-134-01	SCREW (+PTPWH M2.6X6)	
262	1-751-806-11	WIRE (FLAT TYPE)(5 CORE)	
263	4-959-996-01	SPRING (932), COMPRESSION	
264	4-960-834-01	HOLDER (BU)	
M903	A-4604-363-A	MOTOR (L) ASSY (LOADING)	

(7) CD MECHANISM SECTION-2 (CDM28-5BD19)

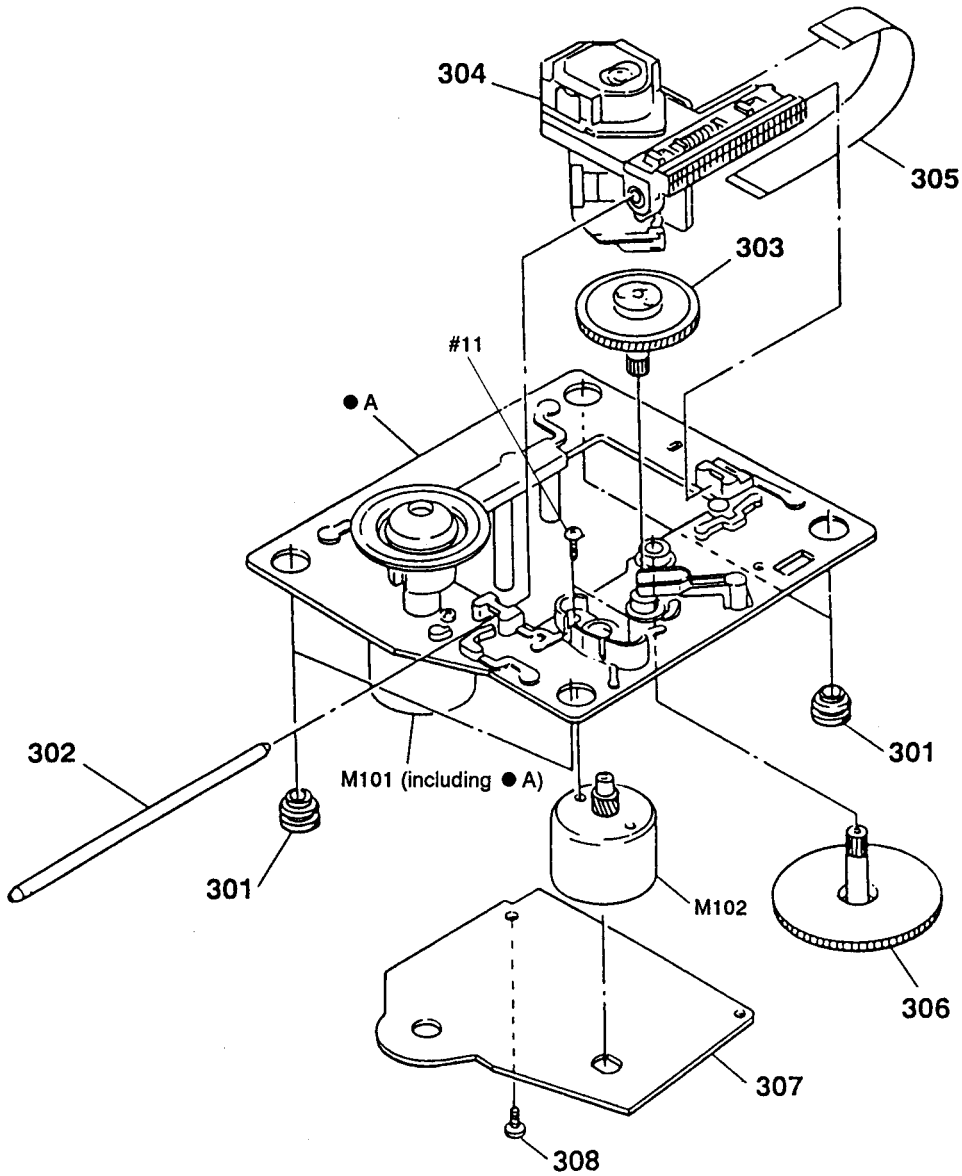

Note:	Note:
The components identified by mark ⚠ or dotted line with mark ⚠ are critical for safety. Replace only with part number specified.	Les composants identifiés par une marque ⚠ sont critiques pour la sécurité. Ne les remplacer que par une pièce portant le neméro spécifié.

Ref. No.	Part No.	Description	Remark
301	4-951-940-01	INSULATOR (BU)	
302	4-917-565-01	SHAFT, SLED	
303	4-917-567-21	GEAR (M)	
⚠304	8-848-376-11	DEVICE, OPTICAL KSS-213B/S-N	
305	1-769-069-11	WIRE (FLAT TYPE) (16 CORE)	
306	4-917-564-01	GEAR (P), FLATNESS	
* 307	A-4673-402-A	BD BOARD, COMPLETE	
308	4-951-620-01	SCREW (2.6X8), +BVTP	
M101	X-4917-523-3	BASE (OUTSERT) ASSY (SPINDLE MOTOR)	
M102	X-4917-504-1	MOTOR ASSY (SLED MOTOR)	

www.manualscenter.com

SECTION 7
ELECTRICAL PARTS LIST

AMS ENCODER **AUDIO**

NOTE:
- Due to standardization, replacements in the parts list may be different from the parts specified in the diagrams or the components used on the set.
- -XX and -X mean standardized parts, so they may have some difference from the original one.
- RESISTORS
  All resistors are in ohms.
  METAL:Metal-film resistor.
  METAL OXIDE: Metal oxide-film resistor.
  F:nonflammable
- Abbreviation
  CND: Canadian G: German AUS: Australian IT: Italian EE: East European SP: Singapore
  MY: Malaysia MX: Mexican HK: Hong Kong AR: Argentin EA: Saudi Arabia

- Items marked "*" are not stocked since they are seldom required for routine service. Some delay should be anticipated when ordering these items.
- SEMICONDUCTORS
  In each case, u:μ, for example:
  uA..: μA.. uPA..: μPA..
  uPB..: μPB.. uPC..: μPC.. uPD..: μPD..
- CAPACITORS
  uF: μF
- COILS
  uH: μH

When indicating parts by reference number, please include the board.

The components identified by mark ⚠ or dotted line with mark ⚠ are critical for safety. Replace only with part number specified.

Les composants identifiés par une marque ⚠ sont critiques pour la sécurité. Ne les remplacer que par une pièce portant le numéro spécifié.

Ref. No.	Part No.	Description			Remark
		AMS ENCODER BOARD			
		**********			
		< CAPACITOR >			
C506	1-162-294-31	CERAMIC	0.001uF	10%	50V
C507	1-162-294-31	CERAMIC	0.001uF	10%	50V
		< ENCODER ROTARY >			
S502	1-467-968-11	ENCODER, ROTARY (- ⏮←→⏭ +)			
**********					
	A-2007-253-A	AUDIO BOARD, COMPLETE			
		**********			
		< CAPACITOR >			
C301	1-162-289-31	CERAMIC	390PF	10%	50V
C302	1-124-443-00	ELECT	100uF	20%	10V
C303	1-162-282-31	CERAMIC	100PF	10%	50V
C304	1-130-483-00	MYLAR	0.01uF	5%	50V
C305	1-124-282-00	ELECT	22uF	20%	16V
C311	1-162-289-31	CERAMIC	390PF	10%	50V
C313	1-162-282-31	CERAMIC	100PF	10%	50V
C314	1-130-487-00	MYLAR	0.022uF	5%	50V
C315	1-124-234-00	ELECT	22uF	20%	16V
C331	1-136-434-11	FILM	120PF	5%	630V
C332	1-162-288-31	CERAMIC	330PF	10%	50V
C333	1-162-209-31	CERAMIC	27PF	5%	50V
C401	1-162-289-31	CERAMIC	390PF	10%	50V
C402	1-124-443-00	ELECT	100uF	20%	10V
C403	1-162-282-31	CERAMIC	100PF	10%	50V
C404	1-130-483-00	MYLAR	0.01uF	5%	50V
C405	1-124-282-00	ELECT	22uF	20%	16V
C411	1-162-289-31	CERAMIC	390PF	10%	50V
C413	1-162-282-31	CERAMIC	100PF	10%	50V
C414	1-130-487-00	MYLAR	0.022uF	5%	50V
C415	1-124-234-00	ELECT	22uF	20%	16V
C431	1-136-434-11	FILM	120PF	5%	630V
C432	1-162-288-31	CERAMIC	330PF	10%	50V
C433	1-162-209-31	CERAMIC	27PF	5%	50V
C601	1-126-157-11	ELECT	10uF	20%	16V
C602	1-126-157-11	ELECT	10uF	20%	16V
C611	1-126-157-11	ELECT	10uF	20%	16V
C612	1-126-157-11	ELECT	10uF	20%	16V
C621	1-136-601-11	FILM	0.01uF	5%	630V
C622	1-124-925-11	ELECT	2.2uF	20%	100V
C623	1-136-155-00	FILM	0.015uF	5%	50V
C624	1-130-481-00	MYLAR	0.0068uF	5%	50V
C625	1-130-481-00	MYLAR	0.0068uF	5%	50V
C627	1-124-903-11	ELECT	1uF	20%	50V
C628	1-136-153-00	FILM	0.01uF	5%	50V
C642	1-124-477-11	ELECT	47uF	20%	25V
C651	1-164-159-11	CERAMIC	0.1uF		50V
		< CONNECTOR >			
* CN601	1-568-864-11	SOCKET, CONNECTOR 21P			
* CN602	1-564-718-11	PIN, CONNECTOR (SMALL TYPE) 2P			
* CN651	1-564-521-11	PLUG, CONNECTOR 6P			
		< IC >			
IC601	8-759-111-44	IC uPC4570C-1			
IC602	8-759-143-54	IC uPC1330HA			
IC611	8-759-111-44	IC uPC4570C-1			
		< COIL >			
L331	1-410-780-11	INDUCTOR	27uH		
L431	1-410-780-11	INDUCTOR	27uH		
		< TRANSISTOR >			
Q621	8-729-142-46	TRANSISTOR 2SC2001-LK			
Q622	8-729-142-46	TRANSISTOR 2SC2001-LK			
Q623	8-729-801-93	TRANSISTOR 2SD1387			
Q651	8-729-900-65	TRANSISTOR DTA144ES			
		< RESISTOR >			
R301	1-247-881-00	CARBON	120K	5%	1/4W
R302	1-249-409-11	CARBON	220	5%	1/4W
R303	1-249-433-11	CARBON	22K	5%	1/4W
R304	1-247-889-00	CARBON	270K	5%	1/4W
R305	1-247-858-11	CARBON	13K	5%	1/4W
R311	1-247-881-00	CARBON	120K	5%	1/4W

AUDIO **BD**

Ref. No.	Part No.	Description			Remark
R312	1-247-807-31	CARBON	100	5%	1/4W
R314	1-247-882-11	CARBON	130K	5%	1/4W
R315	1-247-850-11	CARBON	6.2K	5%	1/4W
R331	1-249-430-11	CARBON	12K	5%	1/4W
R401	1-247-881-00	CARBON	120K	5%	1/4W
R402	1-249-409-11	CARBON	220	5%	1/4W
R403	1-249-433-11	CARBON	22K	5%	1/4W
R404	1-247-889-00	CARBON	270K	5%	1/4W
R405	1-247-858-11	CARBON	13K	5%	1/4W
R411	1-247-881-00	CARBON	120K	5%	1/4W
R412	1-247-807-31	CARBON	100	5%	1/4W
R414	1-247-882-11	CARBON	130K	5%	1/4W
R415	1-247-850-11	CARBON	6.2K	5%	1/4W
R431	1-249-430-11	CARBON	12K	5%	1/4W
R601	1-249-409-11	CARBON	220	5%	1/4W
R602	1-249-409-11	CARBON	220	5%	1/4W
R608	1-249-409-11	CARBON	220	5%	1/4W
R609	1-249-433-11	CARBON	22K	5%	1/4W
R611	1-249-409-11	CARBON	220	5%	1/4W
R612	1-249-409-11	CARBON	220	5%	1/4W
⚠R621	1-212-851-00	FUSIBLE	5.6	5%	1/4W
⚠R622	1-212-851-00	FUSIBLE	5.6	5%	1/4W
R623	1-249-432-11	CARBON	18K	5%	1/4W
R624	1-249-432-11	CARBON	18K	5%	1/4W
R625	1-249-429-11	CARBON	10K	5%	1/4W
R651	1-247-856-00	CARBON	11K	5%	1/4W
R652	1-247-856-00	CARBON	11K	5%	1/4W
R653	1-249-441-11	CARBON	100K	5%	1/4W

< VARIABLE RESISTOR >

RV301	1-238-598-11	RES, ADJ, CARBON 2.2K			
RV311	1-238-598-11	RES, ADJ, CARBON 2.2K			
RV341	1-238-551-11	RES, ADJ, CARBON 220K			
RV401	1-238-598-11	RES, ADJ, CARBON 2.2K			
RV411	1-238-598-11	RES, ADJ, CARBON 2.2K			
RV441	1-238-551-11	RES, ADJ, CARBON 220K			
RV651	1-238-599-11	RES, ADJ, CARBON 4.7K			
RV652	1-238-599-11	RES, ADJ, CARBON 4.7K			

< TRANSFORMER >

T621	1-423-980-11	TRANSFORMER, BIAS OSCILLATION			

****

* A-4673-402-A BD BOARD, COMPLETE

****

< CAPACITOR >

C101	1-126-607-11	ELECT CHIP	47uF	20%	4V
C102	1-163-275-11	CERAMIC CHIP	0.001uF	5%	50V
C103	1-164-346-11	CERAMIC CHIP	1uF		16V
C105	1-163-038-00	CERAMIC CHIP	0.1uF		25V
C106	1-164-695-11	CERAMIC CHIP	0.0022uF	5%	50V
C107	1-164-695-11	CERAMIC CHIP	0.0022uF	5%	50V
C108	1-164-232-11	CERAMIC CHIP	0.01uF		50V
C109	1-164-232-11	CERAMIC CHIP	0.01uF		50V
C110	1-163-989-11	CERAMIC CHIP	0.033uF	10%	25V
C111	1-163-038-00	CERAMIC CHIP	0.1uF		25V
C112	1-163-038-00	CERAMIC CHIP	0.1uF		25V
C113	1-164-695-11	CERAMIC CHIP	0.0022uF	5%	50V
C114	1-164-005-11	CERAMIC CHIP	0.47uF		25V
C115	1-126-607-11	ELECT CHIP	47uF	20%	4V
C116	1-163-143-00	CERAMIC CHIP	0.0012uF	5%	50V
C117	1-164-005-11	CERAMIC CHIP	0.47uF		25V
C118	1-163-038-00	CERAMIC CHIP	0.1uF		25V
C119	1-163-038-00	CERAMIC CHIP	0.1uF		25V
C120	1-135-201-11	TANTALUM CHIP	10uF	20%	4V
C121	1-163-038-00	CERAMIC CHIP	0.1uF		25V
C122	1-164-232-11	CERAMIC CHIP	0.01uF		50V
C123	1-163-038-00	CERAMIC CHIP	0.1uF		25V
C124	1-126-607-11	ELECT CHIP	47uF	20%	4V
C125	1-164-232-11	CERAMIC CHIP	0.01uF		50V
C126	1-163-038-00	CERAMIC CHIP	0.1uF		25V
C127	1-164-695-11	CERAMIC CHIP	0.0022uF	5%	50V
C128	1-163-135-00	CERAMIC CHIP	560PF	5%	50V
C129	1-163-038-00	CERAMIC CHIP	0.1uF		25V
C130	1-164-336-11	CERAMIC CHIP	0.33uF		25V
C131	1-163-038-00	CERAMIC CHIP	0.1uF		25V
C132	1-163-037-11	CERAMIC CHIP	0.022uF	10%	25V
C133	1-163-145-00	CERAMIC CHIP	0.0015uF	5%	50V
C134	1-164-346-11	CERAMIC CHIP	1uF		16V
C135	1-163-117-00	CERAMIC CHIP	100PF	5%	50V
C136	1-164-005-11	CERAMIC CHIP	0.47uF		25V
C137	1-164-232-11	CERAMIC CHIP	0.01uF		50V
C139	1-163-235-11	CERAMIC CHIP	22PF	5%	50V
C140	1-163-235-11	CERAMIC CHIP	22PF	5%	50V
C141	1-163-038-00	CERAMIC CHIP	0.1uF		25V
C142	1-163-038-00	CERAMIC CHIP	0.1uF		25V
C145	1-135-201-11	TANTALUM CHIP	10uF	20%	4V
C146	1-135-201-11	TANTALUM CHIP	10uF	20%	4V
C147	1-163-275-11	CERAMIC CHIP	0.001uF	5%	50V
C148	1-163-275-11	CERAMIC CHIP	0.001uF	5%	50V
C149	1-164-346-11	CERAMIC CHIP	1uF		16V
C153	1-135-259-11	TANTAL. CHIP	10uF	20%	6.3V
C154	1-163-235-11	CERAMIC CHIP	22PF	5%	50V

The components identified by mark ⚠ or dotted line with mark ⚠ are critical for safety. Replace only with part number specified.	Les composants identifiés par une marque ⚠ sont critiques pour la sécurité. Ne les remplacer que par une pièce portant le numéro spécifié.

www.manualscenter.com

BD HP

Ref. No.	Part No.	Description				Remark
		< CONNECTOR >				
CNU101	1-770-014-11	CONNECTOR, FFC/FPC 16P				
CNU102	1-770-013-11	CONNECTOR, FFC/FPC 19P				
		< IC >				
IC101	8-752-069-56	IC	CXA1782BQ			
IC102	8-759-291-06	IC	BA6397FP-T1			
IC103	8-752-372-94	IC	CXD2507AQ			
IC104	8-759-185-29	IC	PCM1710U-BT1			
		< TRANSISTOR >				
Q101	8-729-010-08	TRANSISTOR	MSB710-RT1			
Q102	8-729-424-08	TRANSISTOR	UN2111			
Q103	8-729-421-22	TRANSISTOR	UN2211			
		< RESISTOR >				
R102	1-216-001-00	METAL CHIP	10	5%	1/10W	
R103	1-216-049-00	METAL GLAZE	1K	5%	1/10W	
R104	1-216-097-00	METAL CHIP	100K	5%	1/10W	
R105	1-216-089-00	METAL CHIP	47K	5%	1/10W	
R106	1-216-089-00	METAL CHIP	47K	5%	1/10W	
R107	1-216-089-00	METAL CHIP	47K	5%	1/10W	
R108	1-216-089-00	METAL CHIP	47K	5%	1/10W	
R109	1-216-097-00	METAL CHIP	100K	5%	1/10W	
R112	1-216-077-00	METAL CHIP	15K	5%	1/10W	
R113	1-216-077-00	METAL CHIP	15K	5%	1/10W	
R114	1-216-101-00	METAL CHIP	150K	5%	1/10W	
R115	1-216-101-00	METAL CHIP	150K	5%	1/10W	
R116	1-216-061-00	METAL CHIP	3.3K	5%	1/10W	
R117	1-216-093-00	METAL CHIP	68K	5%	1/10W	
R118	1-216-049-00	METAL GLAZE	1K	5%	1/10W	
R119	1-216-121-00	METAL CHIP	1M	5%	1/10W	
R120	1-216-089-00	METAL CHIP	47K	5%	1/10W	
R121	1-216-114-00	METAL GLAZE	510K	5%	1/10W	
R122	1-216-097-00	METAL CHIP	100K	5%	1/10W	
R123	1-216-099-00	METAL CHIP	120K	5%	1/10W	
R124	1-216-091-00	METAL CHIP	56K	5%	1/10W	
R125	1-216-069-00	METAL CHIP	6.8K	5%	1/10W	
R126	1-216-063-00	METAL CHIP	3.9K	5%	1/10W	
R127	1-216-089-00	METAL CHIP	47K	5%	1/10W	
R128	1-216-105-00	METAL GLAZE	220K	5%	1/10W	
R129	1-216-049-00	METAL GLAZE	1K	5%	1/10W	
R130	1-216-079-00	METAL CHIP	18K	5%	1/10W	
R131	1-216-079-00	METAL CHIP	18K	5%	1/10W	
R132	1-216-061-00	METAL CHIP	3.3K	5%	1/10W	
R133	1-216-061-00	METAL CHIP	3.3K	5%	1/10W	
R134	1-216-065-00	METAL CHIP	4.7K	5%	1/10W	
R135	1-216-065-00	METAL CHIP	4.7K	5%	1/10W	
R136	1-216-073-00	METAL CHIP	10K	5%	1/10W	
R137	1-216-065-00	METAL CHIP	4.7K	5%	1/10W	
R138	1-216-049-00	METAL GLAZE	1K	5%	1/10W	
R139	1-216-033-00	METAL CHIP	220	5%	1/10W	
R140	1-216-081-00	METAL CHIP	22K	5%	1/10W	
R141	1-216-061-00	METAL CHIP	3.3K	5%	1/10W	
R142	1-216-061-00	METAL CHIP	3.3K	5%	1/10W	
R143	1-216-121-00	METAL CHIP	1M	5%	1/10W	
R144	1-216-073-00	METAL CHIP	10K	5%	1/10W	
R145	1-216-097-00	METAL CHIP	100K	5%	1/10W	
R146	1-216-097-00	METAL CHIP	100K	5%	1/10W	
R147	1-216-049-00	METAL GLAZE	1K	5%	1/10W	
R148	1-216-049-00	METAL GLAZE	1K	5%	1/10W	
R149	1-216-049-00	METAL GLAZE	1K	5%	1/10W	
R150	1-216-037-00	METAL CHIP	330	5%	1/10W	
R151	1-216-037-00	METAL CHIP	330	5%	1/10W	
R152	1-216-037-00	METAL CHIP	330	5%	1/10W	
R153	1-216-089-00	METAL CHIP	47K	5%	1/10W	
R154	1-216-065-00	METAL CHIP	4.7K	5%	1/10W	
R156	1-216-081-00	METAL CHIP	22K	5%	1/10W	
R157	1-216-069-00	METAL CHIP	6.8K	5%	1/10W	
R158	1-216-001-00	METAL CHIP	10	5%	1/10W	
		< VARIABLE RESISTOR >				
RV101	1-241-396-11	RES, ADJ, METAL GLAZE 22K				
RV102	1-241-396-11	RES, ADJ, METAL GLAZE 22K				
RV103	1-241-396-11	RES, ADJ, METAL GLAZE 22K				
		< SWITCH >				
S101	1-572-085-11	SWITCH, LEAF (LIMIT SW)				
		< VIBRATOR >				
X101	1-579-280-11	VIBRATOR, CRYSTAL (16.9344MHz)				
**********						
*	1-655-379-11	HP BOARD				
		********				
*	4-942-204-01	PLATE, GROUND				
		< CAPACITOR >				
C718	1-164-159-11	CERAMIC	0.1uF		50V	
C737	1-124-257-00	ELECT	2.2uF	20%	50V	
C738	1-162-294-31	CERAMIC	0.001uF	10%	50V	
C739	1-162-215-31	CERAMIC	47PF	5%	50V	
C740	1-162-290-31	CERAMIC	470PF	10%	50V	
C741	1-124-464-11	ELECT	0.22uF	20%	50V	
C745	1-126-160-11	ELECT	1uF	20%	50V	
C746	1-124-589-11	ELECT	47uF	20%	16V	

Ref. No.	Part No.	Description			Remark
C747	1-124-589-11	ELECT	47uF	20%	16V
C755	1-162-282-31	CERAMIC	100PF	10%	50V
C759	1-162-215-31	CERAMIC	47PF	5%	50V
C790	1-164-159-11	CERAMIC	0.1uF		50V
C792	1-162-306-11	CERAMIC	0.01uF	30%	16V
		< CONNECTOR >			
CN701	1-564-707-11	PIN, CONNECTOR (SMALL TYPE) 5P			
* CN703	1-564-509-11	PLUG, CONNECTOR			
		< IC >			
IC706	8-759-634-51	IC M5218AP			
		< JACK >			
J702	1-507-854-00	JACK, PHONE (MIX MIC)			
J703	1-507-854-00	JACK, PHONE (PHONES)			
		< RESISTOR >			
R739	1-249-417-11	CARBON	1K	5%	1/4W
R740	1-249-441-11	CARBON	100K	5%	1/4W
R741	1-249-417-11	CARBON	1K	5%	1/4W
R742	1-249-433-11	CARBON	22K	5%	1/4W
R746	1-247-807-31	CARBON	100	5%	1/4W
R750	1-249-429-11	CARBON	10K	5%	1/4W
R756	1-247-881-00	CARBON	120K	5%	1/4W
R757	1-249-429-11	CARBON	10K	5%	1/4W

****

*	1-655-377-11	KARAOKE SW BOARD			
		**********			
		< DIODE >			
D514	8-719-046-44	DIODE SEL5221S-TP15 (KARAOKE PON)			
		< RESISTOR >			
R535	1-249-423-11	CARBON	3.3K	5%	1/4W
R536	1-249-427-11	CARBON	6.8K	5%	1/4W
		< SWITCH >			
S528	1-572-184-11	SWITCH, KEYBOARD (KARAOKE PON)			

****

Ref. No.	Part No.	Description			Remark
*	1-650-669-21	LEAF SW BOARD			
		**********			
*	3-381-776-01	HOLDER (LED)			
		< CONNECTOR >			
* CN1001	1-568-854-11	SOCKET, CONNECTOR 11P			
		< TRANSISTOR >			
Q1001	8-719-710-02	TRANSISTOR PHOTO REFLECTOR NJL5165K-A			
Q1002	8-719-710-02	TRANSISTOR PHOTO REFLECTOR NJL5165K-A			
		< RESISTOR >			
R1001	1-249-412-11	CARBON	390	5%	1/4W
R1002	1-249-412-11	CARBON	390	5%	1/4W
R1003	1-249-414-11	CARBON	560	5%	1/4W
R1004	1-247-834-11	CARBON	1.3K	5%	1/4W
R1005	1-247-818-11	CARBON	300	5%	1/4W
		< SWITCH >			
S1001	1-692-832-11	SWITCH, PUSH (1 KEY) (A PLAY)			
S1002	1-692-832-11	SWITCH, PUSH (1 KEY) (B PLAY)			
S1003	1-572-248-11	SWITCH, LEAF (A HALF)			
S1004	1-571-281-21	SWITCH, LEAF (A CrO2)			
S1005	1-571-281-21	SWITCH, LEAF (REC A)			
S1006	1-572-248-11	SWITCH, LEAF (B HALF)			
S1008	1-571-281-21	SWITCH, LEAF (B CrO2)			
S1009	1-571-281-21	SWITCH, LEAF (REC B)			

****

*	1-650-836-11	LOADING BOARD			
		**********			
		< CONNECTOR >			
* CN291	1-568-943-11	PIN, CONNECTOR 5P			
		< SWITCH >			
S291	1-572-086-11	SWITCH, LEAF (LOAD OUT)			
S292	1-572-086-11	SWITCH, LEAF (LOAD IN)			

****

*	A-4377-366-A	MAIN BOARD, COMPLETE (E2, MX, AR)
		**********
*	A-4377-367-A	MAIN BOARD, COMPLETE (E3, MY, SP, HK)
		**********
*	A-4377-368-A	MAIN BOARD, COMPLETE (EA)
		**********

Ref. No.	Part No.	Description			Remark
*	A-4377-369-A	MAIN BOARD, COMPLETE (AUS)			
		**********			
*	A-4377-373-A	MAIN BOARD, COMPLETE (CND)			
		**********			
*	A-4377-383-A	MAIN BOARD, COMPLETE (AE1)			
		**********			
*	A-4377-384-A	MAIN BOARD, COMPLETE (EE)			
		**********			
*	A-4377-385-A	MAIN BOARD, COMPLETE (CIS)			
		**********			
*	A-4377-386-A	MAIN BOARD, COMPLETE (AE2)			
		**********			
*	A-4377-387-A	MAIN BOARD, COMPLETE (G)			
		**********			
*	A-4377-388-A	MAIN BOARD, COMPLETE (IT)			
		**********			
*	A-4377-389-A	MAIN BOARD, COMPLETE (UK2)			
		**********			
*	A-4377-950-A	MAIN BOARD, COMPLETE (UK1)			
		**********			
	7-685-645-79	SCREW +BVTP 3X6 TYPE2 N-S			
		< CAPACITOR >			
C1	1-162-306-11	CERAMIC	0.01uF	30%	16V
C2	1-162-205-31	CERAMIC	18PF	5%	50V
C3	1-162-306-11	CERAMIC	0.01uF	30%	16V
C4	1-162-306-11	CERAMIC	0.01uF	30%	16V
C5	1-126-967-11	ELECT	47uF	20%	16V
C6	1-162-306-11	CERAMIC	0.01uF	30%	16V (AE2, G, IT, UK2)
C10	1-162-306-11	CERAMIC	0.01uF	30%	16V
C11	1-164-159-11	CERAMIC	0.1uF		50V (E3, EA, MY, SP, HK)
C13	1-164-159-11	CERAMIC	0.1uF		50V
C14	1-164-159-11	CERAMIC	0.1uF		50V (E3, EA, MY, SP, HK)
C15	1-136-162-00	FILM	0.056uF	5%	50V (E3, EA, MY, SP, HK)
C16	1-126-933-11	ELECT	100uF	20%	16V (E3, EA, MY, SP, HK)
C17	1-162-306-11	CERAMIC	0.01uF	30%	16V (E3, EA, MY, SP, HK)
C18	1-162-195-31	CERAMIC	4.7PF	10%	50V (E3, EA, MY, SP, HK)
C19	1-102-527-11	CERAMIC	82PF	5%	50V (AEP, EE, UK, CIS)
C20	1-162-211-31	CERAMIC	33PF	5%	50V (AE2, G, IT, UK2)
C21	1-162-306-11	CERAMIC	0.01uF	30%	16V
C22	1-162-306-11	CERAMIC	0.01uF	30%	16V
C23	1-162-199-31	CERAMIC	10PF	5%	50V
C24	1-162-199-31	CERAMIC	10PF	5%	50V
C26	1-126-967-11	ELECT	47uF	20%	16V
C27	1-162-306-11	CERAMIC	0.01uF	30%	16V
C28	1-126-967-11	ELECT	47uF	20%	16V
C29	1-162-306-11	CERAMIC	0.01uF	30%	16V
C30	1-124-257-00	ELECT	2.2uF	20%	50V
C31	1-136-153-00	FILM	0.01uF	5%	50V
C32	1-124-463-00	ELECT	0.1uF	20%	50V
C33	1-164-159-11	CERAMIC	0.1uF		50V
C34	1-162-196-31	CERAMIC	5.6PF	10%	50V (EXCEPT AEP, EE, UK, CIS)
C34	1-162-198-31	CERAMIC	8.2PF	10%	50V (AEP, EE, UK, CIS)
C39	1-162-306-11	CERAMIC	0.01uF	30%	16V
C40	1-162-306-11	CERAMIC	0.01uF	30%	16V
C41	1-164-159-11	CERAMIC	0.1uF		50V
C42	1-162-306-11	CERAMIC	0.01uF	30%	16V
C43	1-162-306-11	CERAMIC	0.01uF	30%	16V
C44	1-162-306-11	CERAMIC	0.01uF	30%	16V
C45	1-162-306-11	CERAMIC	0.01uF	30%	16V
C46	1-162-306-11	CERAMIC	0.01uF	30%	16V
C47	1-126-967-11	ELECT	47uF	20%	16V
C48	1-162-306-11	CERAMIC	0.01uF	30%	16V
C49	1-124-902-00	ELECT	0.47uF	20%	50V
C50	1-124-903-11	ELECT	1uF	20%	50V
C51	1-124-903-11	ELECT	1uF	20%	50V
C52	1-126-964-11	ELECT	10uF	20%	50V
C53	1-126-964-11	ELECT	10uF	20%	50V
C54	1-126-964-11	ELECT	10uF	20%	50V
C55	1-126-964-11	ELECT	10uF	20%	50V
C56	1-126-964-11	ELECT	10uF	20%	50V
C57	1-162-600-11	CERAMIC	0.0047uF	30%	16V
C58	1-162-600-11	CERAMIC	0.0047uF	30%	16V
C59	1-136-159-00	FILM	0.033uF	5%	50V (EXCEPT CND)
C59	1-136-495-11	FILM	0.068uF	5%	50V (CND)
C60	1-136-159-00	FILM	0.033uF	5%	50V (EXCEPT CND)
C60	1-136-495-11	FILM	0.068uF	5%	50V (CND)
C61	1-124-903-11	ELECT	1uF	20%	50V
C62	1-162-294-31	CERAMIC	0.001uF	10%	50V
C63	1-162-303-11	CERAMIC	0.0033uF	30%	16V

www.manualscenter.com

MAIN

Ref. No.	Part No.	Description			Remark
C64	1-126-967-11	ELECT	47uF	20%	16V
C65	1-162-306-11	CERAMIC	0.01uF	30%	16V
C66	1-126-111-11	ELECT	3.3uF	20%	50V
C67	1-126-933-11	ELECT	100uF	20%	10V
C68	1-162-306-11	CERAMIC	0.01uF	30%	16V
C69	1-126-964-11	ELECT	10uF	20%	50V (CIS)
C70	1-126-964-11	ELECT	10uF	20%	50V (CIS)
C94	1-126-967-11	ELECT	47uF	20%	16V
C95	1-162-306-11	CERAMIC	0.01uF	30%	16V
C101	1-162-286-31	CERAMIC	220PF	10%	50V
C102	1-162-600-11	CERAMIC	0.0047uF	30%	16V
C112	1-162-306-11	CERAMIC	0.01uF	30%	16V
C113	1-162-306-11	CERAMIC	0.01uF	30%	16V
C124	1-126-964-11	ELECT	10uF	20%	50V
C125	1-136-161-00	FILM	0.047uF	5%	50V
C126	1-136-161-00	FILM	0.047uF	5%	50V
C127	1-136-169-00	FILM	0.22uF	5%	50V
C128	1-162-305-11	CERAMIC	0.0068uF	30%	16V
C129	1-136-159-00	FILM	0.033uF	5%	50V
C130	1-162-306-11	CERAMIC	0.01uF	30%	16V
C131	1-136-169-00	FILM	0.22uF	5%	50V
C132	1-136-169-00	FILM	0.22uF	5%	50V
C133	1-126-964-11	ELECT	10uF	20%	50V
C134	1-126-964-11	ELECT	10uF	20%	50V
C135	1-136-169-00	FILM	0.22uF	5%	50V
C136	1-136-169-00	FILM	0.22uF	5%	50V
C137	1-162-306-11	CERAMIC	0.01uF	30%	16V
C138	1-136-159-00	FILM	0.033uF	5%	50V
C139	1-162-305-11	CERAMIC	0.0068uF	30%	16V
C140	1-136-169-00	FILM	0.22uF	5%	50V
C141	1-136-161-00	FILM	0.047uF	5%	50V
C142	1-161-494-00	CERAMIC	0.022uF		25V
C143	1-126-964-11	ELECT	10uF	20%	50V
C144	1-162-306-11	CERAMIC	0.01uF	30%	16V
C145	1-124-257-00	ELECT	2.2uF	20%	50V
C146	1-126-964-11	ELECT	10uF	20%	50V
C147	1-162-306-11	CERAMIC	0.01uF	30%	16V
C149	1-124-257-00	ELECT	2.2uF	20%	50V
C150	1-164-159-11	CERAMIC	0.1uF		50V
C151	1-162-286-31	CERAMIC	220PF	10%	50V
C152	1-162-600-11	CERAMIC	0.0047uF	30%	16V
C153	1-162-600-11	CERAMIC	0.0047uF	30%	16V
C154	1-162-600-11	CERAMIC	0.0047uF	30%	16V
C160	1-164-159-11	CERAMIC	0.1uF		50V
C161	1-136-165-00	FILM	0.1uF	5%	50V
C162	1-136-165-00	FILM	0.1uF	5%	50V
C163	1-136-165-00	FILM	0.1uF	5%	50V
C164	1-136-165-00	FILM	0.1uF	5%	50V

Ref. No.	Part No.	Description			Remark
C165	1-162-306-11	CERAMIC	0.01uF	30%	16V
C166	1-162-306-11	CERAMIC	0.01uF	30%	16V
C171	1-109-889-11	ELECT	1uF	20%	50V
C172	1-109-889-11	ELECT	1uF	20%	50V
C173	1-126-964-11	ELECT	10uF	20%	50V
C174	1-126-964-11	ELECT	10uF	20%	50V
C181	1-126-964-11	ELECT	10uF	20%	50V
C182	1-126-964-11	ELECT	10uF	20%	50V
C183	1-162-294-31	CERAMIC	0.001uF	10%	50V
C184	1-162-294-31	CERAMIC	0.001uF	10%	50V
C194	1-162-306-11	CERAMIC	0.01uF	30%	16V
C195	1-162-306-11	CERAMIC	0.01uF	30%	16V
C196	1-126-964-11	ELECT	10uF	20%	50V
C197	1-162-306-11	CERAMIC	0.01uF	30%	16V
C199	1-124-257-00	ELECT	2.2uF	20%	50V
C300	1-162-294-31	CERAMIC	0.001uF	10%	50V
C303	1-136-165-00	FILM	0.1uF	5%	50V
C304	1-162-206-31	CERAMIC	20PF	5%	50V
C305	1-162-206-31	CERAMIC	20PF	5%	50V
C306	1-164-159-11	CERAMIC	0.1uF		50V
C307	1-162-286-31	CERAMIC	220PF	10%	50V
C312	1-162-306-11	CERAMIC	0.01uF	30%	16V
C314	1-126-926-11	ELECT	1000uF	20%	10V
C320	1-126-927-11	ELECT	2200uF	20%	10V
C380	1-126-964-11	ELECT	10uF	20%	50V
C381	1-162-294-31	CERAMIC	0.001uF	10%	50V
C383	1-162-290-31	CERAMIC	470PF	10%	50V
C398	1-162-306-11	CERAMIC	0.01uF	30%	16V
C401	1-162-286-31	CERAMIC	220PF	10%	50V
C402	1-130-479-00	MYLAR	0.0047uF	5%	50V
C403	1-162-303-11	CERAMIC	0.0033uF	30%	16V
C404	1-164-159-11	CERAMIC	0.1uF		50V
C405	1-126-964-11	ELECT	10uF	20%	50V
C406	1-124-903-11	ELECT	1uF	20%	50V
C407	1-124-902-00	ELECT	0.47uF	20%	50V
C408	1-126-964-11	ELECT	10uF	20%	50V
C409	1-124-464-11	ELECT	0.22uF	20%	50V
C410	1-162-600-11	CERAMIC	0.0047uF	30%	16V
C411	1-124-903-11	ELECT	1uF	20%	50V
C422	1-126-933-11	ELECT	100uF	20%	10V
C423	1-126-933-11	ELECT	100uF	20%	10V
C424	1-164-159-11	CERAMIC	0.1uF		50V
C425	1-164-159-11	CERAMIC	0.1uF		50V
C426	1-164-159-11	CERAMIC	0.1uF		50V
C427	1-126-952-11	ELECT	1000uF	20%	16V
C428	1-126-933-11	ELECT	100uF	20%	16V
C430	1-126-964-11	ELECT	10uF	20%	50V
C431	1-126-964-11	ELECT	10uF	20%	50V
C451	1-162-286-31	CERAMIC	220PF	10%	50V

Ref. No.	Part No.	Description			Remark
C452	1-130-479-00	MYLAR	0.0047uF	5%	50V
C453	1-162-303-11	CERAMIC	0.0033uF	30%	16V
C454	1-164-159-11	CERAMIC	0.1uF		50V
C455	1-126-964-11	ELECT	10uF	20%	50V
C456	1-124-903-11	ELECT	1uF	20%	50V
C457	1-124-902-00	ELECT	0.47uF	20%	50V
C458	1-126-964-11	ELECT	10uF	20%	50V
C459	1-124-464-11	ELECT	0.22uF	20%	50V
C460	1-162-600-11	CERAMIC	0.0047uF	30%	16V
C461	1-124-903-11	ELECT	1uF	20%	50V
C801	1-136-165-00	FILM	0.1uF	5%	50V
C802	1-136-165-00	FILM	0.1uF	5%	50V
C803	1-126-974-11	ELECT	3300uF	20%	50V
C804	1-126-974-11	ELECT	3300uF	20%	50V
C805	1-124-122-11	ELECT	100uF	20%	50V
C806	1-124-122-11	ELECT	100uF	20%	50V
C808	1-126-947-11	ELECT	47uF	20%	35V
C809	1-126-936-11	ELECT	3300uF	20%	16V
C810	1-126-943-11	ELECT	2200uF	20%	25V
C811	1-126-952-11	ELECT	1000uF	20%	16V
C812	1-126-952-11	ELECT	1000uF	20%	16V
C813	1-164-159-11	CERAMIC	0.1uF		50V
C814	1-164-159-11	CERAMIC	0.1uF		50V
C815	1-126-933-11	ELECT	100uF	20%	10V
C824	1-126-933-11	ELECT	100uF	20%	10V
C825	1-126-933-11	ELECT	100uF	20%	10V
C826	1-126-916-11	ELECT	1000uF	20%	6.3V
C827	1-126-925-11	ELECT	470uF	20%	10V
C828	1-124-635-00	ELECT	220uF	20%	6.3V
C829	1-124-635-00	ELECT	220uF	20%	6.3V
C830	1-124-257-00	ELECT	2.2uF	20%	50V
C831	1-126-964-11	ELECT	10uF	20%	50V
C832	1-126-964-11	ELECT	10uF	20%	50V
C833	1-128-551-11	ELECT	22uF	20%	50V
C834	1-136-165-00	FILM	0.1uF	5%	50V
C835	1-126-933-11	ELECT	100uF	20%	10V
C836	1-164-159-11	CERAMIC	0.1uF		50V (AE2, G, IT, UK2)
C837	1-164-159-11	CERAMIC	0.1uF		50V (AE2, G, IT, UK2)
C838	1-126-933-11	ELECT	100uF	20%	10V
C840	1-126-967-11	ELECT	47uF	20%	16V
C886	1-164-159-11	CERAMIC	0.1uF		50V (AE2, G, IT, UK2)
C887	1-164-159-11	CERAMIC	0.1uF		50V (AE2, G, IT, UK2)
C9001	1-162-306-11	CERAMIC	0.01uF	30%	16V
C9002	1-162-306-11	CERAMIC	0.01uF	30%	16V

Ref. No.	Part No.	Description	Remark
		< FILTER >	
CF1	1-567-389-11	FILTER, CERAMIC	
CF2	1-567-389-11	FILTER, CERAMIC (AE2, G, IT, UK2)	
CF3	1-567-389-11	FILTER, CERAMIC	
		< CONNECTOR >	
* CN1	1-568-832-11	SOCKET, CONNECTOR 13P (CIS)	
CN101	1-691-768-11	PLUG (MICRO CONNECTOR) 6P	
* CN103	1-568-954-11	PIN, CONNECTOR 5P	
* CN105	1-568-836-11	SOCKET, CONNECTOR 17P	
CN111	1-568-802-11	SOCKET, CONNECTOR 19P	
CN401	1-568-838-11	SOCKET, CONNECTOR 21P	
* CN402	1-568-830-11	SOCKET, CONNECTOR 11P	
* CN404	1-568-449-11	HOUSING, CONNECTOR(PC BOARD)3P	
		< VARIABLE CAPACITOR >	
CV1	1-141-227-00	CAP, TRIMMER 20PF (E3, EA, MY, SP, HK)	
CV2	1-141-227-00	CAP, TRIMMER 20PF (E3, EA, MY, SP, HK)	
		< DIODE >	
D1	8-719-976-30	DIODE KV1560N (E3, EA, MY, SP, HK)	
D21	8-719-933-33	DIODE HZS6A1L	
D41	8-719-987-63	DIODE 1N4148M	
D42	8-719-987-63	DIODE 1N4148M (CIS)	
D43	8-719-987-63	DIODE 1N4148M (CIS)	
D101	8-719-010-33	DIODE UZ-4.7BSB-TP	
D102	8-719-987-63	DIODE 1N4148M	
D103	8-719-987-63	DIODE 1N4148M	
D104	8-719-987-63	DIODE 1N4148M	
D105	8-719-987-63	DIODE 1N4148M	
D106	8-719-210-21	DIODE 11EQS04	
D107	8-719-987-63	DIODE 1N4148M	
D301	8-719-024-99	DIODE 11ES2-NTA2B	
D302	8-719-987-63	DIODE 1N4148M	
D304	8-719-987-63	DIODE 1N4148M	
D349	8-719-987-63	DIODE 1N4148M	
D401	8-719-987-63	DIODE 1N4148M	
D801	8-719-987-63	DIODE 1N4148M	
D802	8-719-987-63	DIODE 1N4148M	
D803	8-719-025-03	DIODE RBA-402-SL	
D804	8-719-024-99	DIODE 11ES2-NTA2B	
D805	8-719-024-99	DIODE 11ES2-NTA2B	
D806	8-719-934-18	DIODE HZS27-2L	
D807	8-719-024-99	DIODE 11ES2-NTA2B	
D808	8-719-024-99	DIODE 11ES2-NTA2B	
D809	8-719-987-63	DIODE 1N4148M	
D810	8-719-987-63	DIODE 1N4148M	
D811	8-719-024-99	DIODE 11ES2-NTA2B	

MAIN

Ref. No.	Part No.	Description	Remark
D812	8-719-024-99	DIODE 11ES2-NTA2B	(CND, AEP, G, IT, EE, UK, CIS)
D812	8-719-210-21	DIODE 11EQS04	(E, EA, AR, HK, MX, MY, SP, AUS)
D813	8-719-024-99	DIODE 11ES2-NTA2B	
D814	8-719-024-99	DIODE 11ES2-NTA2B	(CND, AEP, G, IT, EE, UK, CIS)
D814	8-719-210-21	DIODE 11EQS04	(E, EA, AR, HK, MX, MY, SP, AUS)
D815	8-719-987-63	DIODE 1N4148M	
D819	8-719-987-63	DIODE 1N4148M	
D823	8-719-024-99	DIODE 11ES2-NTA2B	
D824	8-719-024-99	DIODE 11ES2-NTA2B	(CND, AE1)
		< FRONT END >	
FE1	1-465-396-11	FRONT END (3 GANG)	(EE, CIS)
FE1	1-465-673-11	FRONT END (2 BAND)	
FE1	1-693-090-31	FRONT END (FM) (2 GANG)	(E3, HK, MY, SP, AUS)
FE1	1-693-090-41	FRONT END (FM) (2 GANG)	(EA)
FE1	1-693-090-51	FRONT END (FM) (2 GANG)	(E, AR, HK, MX, MY, SP)
FE1	1-693-217-11	FRONT END (4 GANG)	(AE2, G, IT, UK2)
FE2	1-239-260-11	ENCAPSULATED COMPONENT	(CND, G, IT, E2, AR, MX, AUS)
FE2	1-239-262-11	ENCAPSULATED COMPONENT	(E3, EA, MY, SP, HK)
FE2	1-233-281-11	ENCAPSULATED COMPONENT	(AEP, EE, UK, CIS)
		< IC >	
IC1	8-759-200-60	IC TA7060AP	(AE2, G, IT, UK2)
IC2	8-759-200-60	IC TA7060AP	(AE2, G, IT, UK2)
IC21	8-759-288-54	IC LC72130	
IC41	8-759-176-03	IC LA1835	
IC101	8-759-333-93	IC TMP87CP64F-6254	
IC102	8-759-000-48	IC MC14052BCP	
IC104	8-759-140-53	IC uPD4053BC	(E, EA, AR, HK, MX, MY, SP, AUS)
IC105	8-759-822-09	IC LB1641	
IC107	8-759-634-51	IC M5218AP	
IC108	8-759-291-98	IC M62423FP	
IC109	8-759-281-42	IC TC9210P	
IC301	8-759-916-14	IC SN74HC04AN	
IC401	8-759-289-38	IC HA12195NT	
IC402	8-759-822-09	IC LB1641	
IC801	8-759-111-68	IC uPC1237HA	
IC802	8-759-231-53	IC TA7805S	
IC803	8-759-231-58	IC TA7812S	
IC804	8-759-288-53	IC LA5617	
IC805	8-759-165-80	IC PST600C-T	
IC806	8-759-604-30	IC M5F7808	

Ref. No.	Part No.	Description	Remark
		< IFT >	
IFT41	1-404-853-11	TRANSFORMER, IF (CERAMIC FILTER)	
		< JACK >	
* J101	1-569-130-11	JACK, PIN 2P	(AUX IN)
		< COIL >	
L1	1-410-521-11	INDUCTOR 100uH	(E3, EA, MY, SP, HK)
L2	1-408-397-00	INDUCTOR 1uH	(AE2, G, IT, UK2)
L41	1-407-500-00	INDUCTOR 4.7uH	
L401	1-410-482-31	INDUCTOR 100uH	
L801	1-420-872-00	COIL, AIR-CORE	(AE2, G, IT, UK2)
L851	1-420-872-00	COIL, AIR-CORE	(AE2, G, IT, UK2)
		< FILTER >	
LPF41	1-239-845-11	FILTER, LOW PASS	
LPF42	1-239-845-11	FILTER, LOW PASS	
		< TRANSISTOR >	
Q1	8-729-230-99	TRANSISTOR 2SC2669-OY	(EXCEPT AE2, G, IT, UK2)
Q2	8-729-230-99	TRANSISTOR 2SC2669-OY	(EXCEPT AE2, G, IT, UK2)
Q3	8-729-422-57	TRANSISTOR UN4111	
Q8	8-729-231-20	TRANSISTOR 2SK161-YGR	(E3, EA, MY, SP, HK)
Q9	8-729-119-76	TRANSISTOR 2SA1175-HFE	(E3, EA, MY, SP, HK)
Q10	8-729-119-76	TRANSISTOR 2SA1175-HFE	(E3, EA, MY, SP, HK)
Q11	8-729-900-80	TRANSISTOR DTC114ES	(AEP, EE, UK, CIS)
Q12	8-729-900-80	TRANSISTOR DTC114ES	(AEP, EE, UK, E3, EA, CIS, HK, MY, SP)
Q13	8-729-900-80	TRANSISTOR DTC114ES	(AEP, EE, UK, E3, EA, CIS, HK, MY, SP)
Q14	8-729-900-80	TRANSISTOR DTC114ES	(AEP, EE, UK, E3, EA, CIS, HK, MY, SP)
Q105	8-729-119-78	TRANSISTOR 2SC2785-HFE	
Q107	8-729-900-80	TRANSISTOR DTC114ES	
Q108	8-729-900-80	TRANSISTOR DTC114ES	
Q110	8-729-900-80	TRANSISTOR DTC114ES	(E, EA, AR, HK, MX, MY, SP, AUS)
Q170	8-729-422-57	TRANSISTOR UN4111	
Q171	8-729-141-26	TRANSISTOR 2SC3622A-LK	
Q172	8-729-141-26	TRANSISTOR 2SC3622A-LK	
Q173	8-729-119-78	TRANSISTOR 2SC2785-HFE	
Q174	8-729-119-78	TRANSISTOR 2SC2785-HFE	
Q303	8-729-119-78	TRANSISTOR 2SC2785-HFE	
Q401	8-729-119-78	TRANSISTOR 2SC2785-HFE	
Q403	8-729-900-65	TRANSISTOR DTA144ES	

www.manualscenter.com

Ref. No.	Part No.	Description	Remark
Q404	8-729-119-78	TRANSISTOR 2SC2785-HFE	
Q405	8-729-111-29	TRANSISTOR 2SD1616A-K	
Q406	8-729-111-29	TRANSISTOR 2SD1616A-K	
Q407	8-729-111-29	TRANSISTOR 2SD1616A-K	
Q408	8-729-422-57	TRANSISTOR UN4111	
Q409	8-729-900-80	TRANSISTOR DTC114ES	
Q410	8-729-119-76	TRANSISTOR 2SA1175-HFE	
Q411	8-729-900-80	TRANSISTOR DTC114ES	
Q412	8-729-900-65	TRANSISTOR DTA144ES	
Q413	8-729-900-65	TRANSISTOR DTA144ES	
Q414	8-729-900-65	TRANSISTOR DTA144ES	
Q451	8-729-119-78	TRANSISTOR 2SC2785-HFE	
Q801	8-729-900-63	TRANSISTOR DTA124ES	
Q802	8-729-900-89	TRANSISTOR DTC144ES	
Q807	8-729-900-89	TRANSISTOR DTC144ES	
Q808	8-729-140-04	TRANSISTOR 2SB1116A-L	
Q809	8-729-900-89	TRANSISTOR DTC144ES	
Q810	8-729-140-04	TRANSISTOR 2SB1116A-L	
Q811	8-729-140-04	TRANSISTOR 2SB1116A-L	
Q812	8-729-422-57	TRANSISTOR UN4111	
Q813	8-729-111-29	TRANSISTOR 2SD1616A-K	
Q814	8-729-900-80	TRANSISTOR DTC114ES	

< RESISTOR >

Ref. No.	Part No.	Description	Remark
R4	1-249-411-11	CARBON 330 5% 1/4W	
R5	1-249-411-11	CARBON 330 5% 1/4W	
R6	1-249-409-11	CARBON 220 5% 1/4W	
R7	1-249-411-11	CARBON 330 5% 1/4W	
R8	1-249-432-11	CARBON 18K 5% 1/4W	
R9	1-249-434-11	CARBON 27K 5% 1/4W	
R10	1-249-411-11	CARBON 330 5% 1/4W	
R11	1-249-411-11	CARBON 330 5% 1/4W	(AE2, G, IT, UK2)
R12	1-249-432-11	CARBON 18K 5% 1/4W	(AE2, G, IT, UK2)
R13	1-249-434-11	CARBON 27K 5% 1/4W	(AE2, G, IT, UK2)
R14	1-249-411-11	CARBON 330 5% 1/4W	(AE2, G, IT, UK2)
R15	1-249-414-11	CARBON 560 5% 1/4W	(EXCEPT AE2, G, IT, UK2)
R17	1-249-399-11	CARBON 33 5% 1/4W	
R18	1-249-429-11	CARBON 10K 5% 1/4W	(AEP, EE, UK, E3, EA, CIS, HK, MY, SP)
R19	1-249-429-11	CARBON 10K 5% 1/4W	(AEP, EE, UK, E3, EA, CIS, HK, MY, SP)
R20	1-247-903-00	CARBON 1M 5% 1/4W	(E3, EA, MY, SP, HK)
R21	1-249-417-11	CARBON 1K 5% 1/4W	
R22	1-249-417-11	CARBON 1K 5% 1/4W	
R23	1-249-417-11	CARBON 1K 5% 1/4W	
R24	1-249-417-11	CARBON 1K 5% 1/4W	
R25	1-249-425-11	CARBON 4.7K 5% 1/4W	
R26	1-249-435-11	CARBON 33K 5% 1/4W	
R27	1-249-429-11	CARBON 10K 5% 1/4W	
R28	1-249-417-11	CARBON 1K 5% 1/4W	
R29	1-249-423-11	CARBON 3.3K 5% 1/4W	
R30	1-247-811-31	CARBON 150 5% 1/4W	
R31	1-247-807-31	CARBON 100 5% 1/4W	
R32	1-249-421-11	CARBON 2.2K 5% 1/4W	
R33	1-249-425-11	CARBON 4.7K 5% 1/4W	
R34	1-249-425-11	CARBON 4.7K 5% 1/4W	
R35	1-249-425-11	CARBON 4.7K 5% 1/4W	
R36	1-247-807-31	CARBON 100 5% 1/4W	
R37	1-249-429-11	CARBON 10K 5% 1/4W	
R38	1-249-437-11	CARBON 47K 5% 1/4W	
R41	1-249-437-11	CARBON 47K 5% 1/4W	
R42	1-249-423-11	CARBON 3.3K 5% 1/4W	
R43	1-249-442-11	CARBON 510 5% 1/4W	
R44	1-247-807-31	CARBON 100 5% 1/4W	
R45	1-247-842-11	CARBON 3K 5% 1/4W	
R46	1-249-429-11	CARBON 10K 5% 1/4W	
R47	1-249-441-11	CARBON 100K 5% 1/4W	
R48	1-249-423-11	CARBON 3.3K 5% 1/4W	
R49	1-249-423-11	CARBON 3.3K 5% 1/4W	
R50	1-249-426-11	CARBON 5.6K 5% 1/4W	
R51	1-249-426-11	CARBON 5.6K 5% 1/4W	
R52	1-249-435-11	CARBON 33K 5% 1/4W	
R53	1-249-429-11	CARBON 10K 5% 1/4W	
R54	1-249-399-11	CARBON 33 5% 1/4W	
R55	1-249-399-11	CARBON 33 5% 1/4W	(E3, EA, MY, SP, HK)
R56	1-247-807-31	CARBON 100 5% 1/4W	
R91	1-249-425-11	CARBON 4.7K 5% 1/4W	(E3, EA, MY, SP, HK)
R92	1-249-429-11	CARBON 10K 5% 1/4W	(E3, EA, MY, SP, HK)
R93	1-249-429-11	CARBON 10K 5% 1/4W	(E3, EA, MY, SP, HK)
R94	1-249-429-11	CARBON 10K 5% 1/4W	(E3, EA, MY, SP, HK)
R101	1-249-425-11	CARBON 4.7K 5% 1/4W	
R102	1-249-427-11	CARBON 6.8K 5% 1/4W	
R111	1-249-429-11	CARBON 10K 5% 1/4W	
R112	1-249-429-11	CARBON 10K 5% 1/4W	
R114	1-249-429-11	CARBON 10K 5% 1/4W	(E, EA, AR, HK, MX, MY, SP, AUS)

MAIN

Ref. No.	Part No.	Description				Remark
R128	1-249-441-11	CARBON	100K	5%	1/4W	
R129	1-249-441-11	CARBON	100K	5%	1/4W	
R130	1-249-441-11	CARBON	100K	5%	1/4W	
R131	1-247-903-00	CARBON	1M	5%	1/4W	
R133	1-249-417-11	CARBON	1K	5%	1/4W	
R134	1-247-895-00	CARBON	470K	5%	1/4W	
R135	1-249-441-11	CARBON	100K	5%	1/4W	
R144	1-249-415-11	CARBON	680	5%	1/4W	
R145	1-249-417-11	CARBON	1K	5%	1/4W	
R148	1-249-431-11	CARBON	15K	5%	1/4W	
R149	1-249-441-11	CARBON	100K	5%	1/4W	
R150	1-249-421-11	CARBON	2.2K	5%	1/4W	
R151	1-249-425-11	CARBON	4.7K	5%	1/4W	
R152	1-249-427-11	CARBON	6.8K	5%	1/4W	
R154	1-249-441-11	CARBON	100K	5%	1/4W	
R155	1-249-441-11	CARBON	100K	5%	1/4W	
R156	1-249-429-11	CARBON	10K	5%	1/4W	
R157	1-249-429-11	CARBON	10K	5%	1/4W	
R158	1-249-433-11	CARBON	22K	5%	1/4W	
R159	1-249-433-11	CARBON	22K	5%	1/4W	
R160	1-249-429-11	CARBON	10K	5%	1/4W	
R161	1-249-429-11	CARBON	10K	5%	1/4W	
R162	1-247-895-00	CARBON	470K	5%	1/4W	
R163	1-247-895-00	CARBON	470K	5%	1/4W	
R164	1-249-419-11	CARBON	1.5K	5%	1/4W	
R165	1-249-419-11	CARBON	1.5K	5%	1/4W	
R168	1-249-425-11	CARBON	4.7K	5%	1/4W	
R169	1-249-425-11	CARBON	4.7K	5%	1/4W	
R170	1-249-441-11	CARBON	100K	5%	1/4W	
R171	1-249-425-11	CARBON	4.7K	5%	1/4W	
R172	1-249-421-11	CARBON	2.2K	5%	1/4W	
R173	1-249-429-11	CARBON	10K	5%	1/4W	
R174	1-249-425-11	CARBON	4.7K	5%	1/4W	
R175	1-249-421-11	CARBON	2.2K	5%	1/4W	
R176	1-249-429-11	CARBON	10K	5%	1/4W	
R178	1-249-423-11	CARBON	3.3K	5%	1/4W	
R180	1-249-441-11	CARBON	100K	5%	1/4W	
R181	1-249-429-11	CARBON	10K	5%	1/4W	
R182	1-249-429-11	CARBON	10K	5%	1/4W	
R183	1-249-413-11	CARBON	470	5%	1/4W	
R184	1-247-903-00	CARBON	1M	5%	1/4W	
R185	1-247-903-00	CARBON	1M	5%	1/4W	
R188	1-249-423-11	CARBON	3.3K	5%	1/4W	
R194	1-249-415-11	CARBON	680	5%	1/4W	
R195	1-249-417-11	CARBON	1K	5%	1/4W	
R198	1-249-431-11	CARBON	15K	5%	1/4W	
R199	1-249-441-11	CARBON	100K	5%	1/4W	
R300	1-249-429-11	CARBON	10K	5%	1/4W	
R301	1-249-429-11	CARBON	10K	5%	1/4W	
R304	1-249-437-11	CARBON	47K	5%	1/4W	
R306	1-249-429-11	CARBON	10K	5%	1/4W	
R307	1-249-429-11	CARBON	10K	5%	1/4W	
R309	1-247-807-31	CARBON	100	5%	1/4W	
R310	1-247-807-31	CARBON	100	5%	1/4W	
R311	1-247-807-31	CARBON	100	5%	1/4W	
R312	1-247-807-31	CARBON	100	5%	1/4W	
R313	1-247-807-31	CARBON	100	5%	1/4W	
R314	1-247-807-31	CARBON	100	5%	1/4W	
R315	1-247-807-31	CARBON	100	5%	1/4W	
R316	1-249-437-11	CARBON	47K	5%	1/4W	
R317	1-249-433-11	CARBON	22K	5%	1/4W	
R318	1-249-425-11	CARBON	4.7K	5%	1/4W	
R319	1-249-425-11	CARBON	4.7K	5%	1/4W	
R320	1-249-425-11	CARBON	4.7K	5%	1/4W	
R325	1-249-429-11	CARBON	10K	5%	1/4W	
R333	1-249-423-11	CARBON	3.3K	5%	1/4W	
R334	1-249-429-11	CARBON	10K	5%	1/4W	
R335	1-249-429-11	CARBON	10K	5%	1/4W	
R338	1-247-807-31	CARBON	100	5%	1/4W	
R339	1-247-807-31	CARBON	100	5%	1/4W	
R340	1-247-807-31	CARBON	100	5%	1/4W	
R341	1-247-807-31	CARBON	100	5%	1/4W	
R342	1-247-807-31	CARBON	100	5%	1/4W	
R343	1-247-807-31	CARBON	100	5%	1/4W	
R344	1-247-807-31	CARBON	100	5%	1/4W	
R345	1-247-807-31	CARBON	100	5%	1/4W	
R346	1-247-807-31	CARBON	100	5%	1/4W	
R347	1-247-807-31	CARBON	100	5%	1/4W	
R348	1-249-413-11	CARBON	470	5%	1/4W	
R349	1-249-413-11	CARBON	470	5%	1/4W	
R364	1-249-425-11	CARBON	4.7K	5%	1/4W	
R373	1-249-423-11	CARBON	3.3K	5%	1/4W	(E3, EA, MY, SP, HK)
R373	1-249-429-11	CARBON	10K	5%	1/4W	(G, E2, AR, MX, AUS)
R373	1-249-431-11	CARBON	15K	5%	1/4W	(IT, EE)
R373	1-249-433-11	CARBON	22K	5%	1/4W	(AEP, UK)
R373	1-249-435-11	CARBON	33K	5%	1/4W	(CIS)
R374	1-249-423-11	CARBON	3.3K	5%	1/4W	(EE)
R374	1-249-425-11	CARBON	4.7K	5%	1/4W	(CIS)
R374	1-249-429-11	CARBON	10K	5%	1/4W	(AEP, G, IT, UK, EA)
R374	1-249-431-11	CARBON	15K	5%	1/4W	(E3, EA, MY, SP, HK)
R374	1-249-433-11	CARBON	22K	5%	1/4W	(E2, AR, MX)
R378	1-249-429-11	CARBON	10K	5%	1/4W	

Ref. No.	Part No.	Description				Remark
R379	1-249-429-11	CARBON	10K	5%	1/4W	
R380	1-249-429-11	CARBON	10K	5%	1/4W	
R381	1-249-429-11	CARBON	10K	5%	1/4W	
R401	1-249-430-11	CARBON	12K	5%	1/4W	
R402	1-249-431-11	CARBON	15K	5%	1/4W	
R403	1-249-427-11	CARBON	6.8K	5%	1/4W	
R404	1-249-425-11	CARBON	4.7K	5%	1/4W	
R405	1-249-418-11	CARBON	1.2K	5%	1/4W	
R406	1-249-417-11	CARBON	1K	5%	1/4W	
R407	1-249-437-11	CARBON	47K	5%	1/4W	
R408	1-249-417-11	CARBON	1K	5%	1/4W	
R409	1-249-433-11	CARBON	22K	5%	1/4W	
R420	1-249-432-11	CARBON	18K	5%	1/4W	
R421	1-249-429-11	CARBON	10K	5%	1/4W	
R422	1-249-429-11	CARBON	10K	5%	1/4W	
R423	1-249-429-11	CARBON	10K	5%	1/4W	
R424	1-249-429-11	CARBON	10K	5%	1/4W	
R425	1-249-429-11	CARBON	10K	5%	1/4W	
R426	1-249-429-11	CARBON	10K	5%	1/4W	
R427	1-249-429-11	CARBON	10K	5%	1/4W	
R428	1-249-429-11	CARBON	10K	5%	1/4W	
R429	1-249-429-11	CARBON	10K	5%	1/4W	
R430	1-247-866-11	CARBON	30K	5%	1/4W	
R431	1-247-882-11	CARBON	130K	5%	1/4W	
R432	1-249-429-11	CARBON	10K	5%	1/4W	
R433	1-249-425-11	CARBON	4.7K	5%	1/4W	
R434	1-249-425-11	CARBON	4.7K	5%	1/4W	
R435	1-249-425-11	CARBON	4.7K	5%	1/4W	
R436	1-249-417-11	CARBON	1K	5%	1/4W	
R437	1-249-436-11	CARBON	39K	5%	1/4W	
R438	1-249-436-11	CARBON	39K	5%	1/4W	
R439	1-249-437-11	CARBON	47K	5%	1/4W	
R440	1-249-437-11	CARBON	47K	5%	1/4W	
R441	1-249-381-11	CARBON	1	5%	1/4W	
R442	1-249-413-11	CARBON	470	5%	1/4W	
R443	1-249-381-11	CARBON	1	5%	1/4W	
R444	1-249-413-11	CARBON	470	5%	1/4W	
R445	1-249-381-11	CARBON	1	5%	1/4W	
R446	1-249-413-11	CARBON	470	5%	1/4W	
R447	1-249-419-11	CARBON	1.5K	5%	1/4W	
R448	1-249-433-11	CARBON	22K	5%	1/4W	
R449	1-249-435-11	CARBON	33K	5%	1/4W	
R450	1-249-433-11	CARBON	22K	5%	1/4W	
R451	1-249-430-11	CARBON	12K	5%	1/4W	
R452	1-249-431-11	CARBON	15K	5%	1/4W	
R453	1-249-427-11	CARBON	6.8K	5%	1/4W	
R454	1-249-425-11	CARBON	4.7K	5%	1/4W	
R455	1-249-418-11	CARBON	1.2K	5%	1/4W	
R456	1-249-417-11	CARBON	1K	5%	1/4W	
R457	1-249-437-11	CARBON	47K	5%	1/4W	
R458	1-249-417-11	CARBON	1K	5%	1/4W	
R459	1-249-433-11	CARBON	22K	5%	1/4W	
R460	1-249-425-11	CARBON	4.7K	5%	1/4W	
R461	1-249-425-11	CARBON	4.7K	5%	1/4W	
R462	1-249-425-11	CARBON	4.7K	5%	1/4W	
R470	1-249-433-11	CARBON	22K	5%	1/4W	
R480	1-247-864-11	CARBON	24K	5%	1/4W	
⚠R801	1-219-122-00	FUSIBLE	0.33	5%	1/4W	F
⚠R802	1-219-122-00	FUSIBLE	0.33	5%	1/4W	F
R803	1-249-429-11	CARBON	10K	5%	1/4W	
R804	1-249-429-11	CARBON	10K	5%	1/4W	
⚠R805	1-219-122-00	FUSIBLE	0.33	5%	1/4W	F
R806	1-249-417-11	CARBON	1K	5%	1/4W	
R808	1-249-417-11	CARBON	1K	5%	1/4W	
⚠R814	1-219-122-00	FUSIBLE	0.33	5%	1/4W	F
R820	1-249-421-11	CARBON	2.2K	5%	1/4W	
R821	1-249-409-11	CARBON	220	5%	1/4W	
R822	1-249-429-11	CARBON	10K	5%	1/4W	
R823	1-249-421-11	CARBON	2.2K	5%	1/4W	
R824	1-249-429-11	CARBON	10K	5%	1/4W	
R825	1-249-441-11	CARBON	100K	5%	1/4W	
R826	1-249-397-11	CARBON	22	5%	1/4W	
R827	1-249-435-11	CARBON	33K	5%	1/4W	
R828	1-249-425-11	CARBON	4.7K	5%	1/4W	
R829	1-249-425-11	CARBON	4.7K	5%	1/4W	
R830	1-249-409-11	CARBON	220	5%	1/4W	
R831	1-249-439-11	CARBON	68K	5%	1/4W	
R832	1-249-389-11	CARBON	4.7	5%	1/4W	(AE2, G, IT, UK2)
R833	1-249-389-11	CARBON	4.7	5%	1/4W	(AE2, G, IT, UK2)
R834	1-249-393-11	CARBON	10	5%	1/4W	(AE2, G, IT, UK2)
R835	1-249-409-11	CARBON	220	5%	1/4W	
R836	1-249-397-11	CARBON	22	5%	1/4W	
R838	1-249-429-11	CARBON	10K	5%	1/4W	
R840	1-249-417-11	CARBON	1K	5%	1/4W	F
R841	1-249-417-11	CARBON	1K	5%	1/4W	F
R881	1-249-437-11	CARBON	47K	5%	1/4W	
R882	1-249-389-11	CARBON	4.7	5%	1/4W	(AE2, G, IT, UK2)
R883	1-249-389-11	CARBON	4.7	5%	1/4W	(AE2, G, IT, UK2)
R884	1-249-393-11	CARBON	10	5%	1/4W	F (AE2, G, IT, UK2)
R890	1-249-417-11	CARBON	1K	5%	1/4W	F
R891	1-249-417-11	CARBON	1K	5%	1/4W	F

The components identified by mark ⚠ or dotted line with mark ⚠ are critical for safety. Replace only with part number specified.	Les composants identifiés par une marque ⚠ sont critiques pour la sécurité. Ne les remplacer que par une pièce portant le numéro spécifié.

www.manualscenter.com

MAIN PANEL

Ref. No.	Part No.	Description	Remark
		< VARIABLE RESISTOR >	
RV41	1-238-019-11	RES, ADJ, CARBON 47K	
RV42	1-241-630-11	RES, ADJ, CARBON 10K	
RV401	1-241-630-11	RES, ADJ, CARBON 10K	
RV451	1-241-630-11	RES, ADJ, CARBON 10K	
		< RELAY >	
RY801	1-515-921-11	RELAY (12V)	
		< TRANSFORMER >	
T1	1-409-505-11	COIL (ANT. SW3) (E3, EA, MY, SP, HK)	
T2	1-402-960-11	COIL (OSC SW3) (E3, EA, MY, SP, HK)	
		< TERMINAL >	
TB101	1-537-240-31	TERMINAL BOARD (CHECKER PIN) (SPEAKER) (IMPEDANCE USE 6-16Ω)	
		< TERMINAL >	
TM1	1-537-238-21	TERMINAL BOARD (ANTENNA) (CND, E, EA, AR, HK, MX, MY, SP, AUS)	
TM1	1-537-488-11	TERMINAL BOARD (ANTENNA) (AEP, G, IT, EE, UK, CIS)	
		< VIBRATOR >	
X21	1-578-785-11	VIBRATOR, CRYSTAL (4.5MHz)	
X41	1-760-220-21	FILTER, CERAMIC	
X42	1-527-981-00	FILTER, CERAMIC	
X43	1-577-075-11	OSCILLATOR, CERAMIC (19KHz)	
X301	1-579-125-11	VIBRATOR, CERAMIC (8MHz)	
X302	1-567-098-41	VIBRATOR, CRYSTAL (32.768KHz)	
**********			
*	A-4377-374-A	PANEL BOARD, COMPLETE (EXCEPT AE2, IT, UK, G) **********	
*	A-4377-375-A	PANEL BOARD, COMPLETE (AE2, IT, UK) **********	
*	A-4377-707-A	PANEL BOARD, COMPLETE (G) **********	
	3-362-478-01	HOLDER (T), LED	
	4-955-901-11	CUSHION (FL)	
	4-970-853-11	HOUSE, LAMP	
	4-971-014-11	HOLDER, FL TUBE	
	4-971-914-01	HOLDER, LED	
	1-533-293-11	FUSE HOLDER	

Ref. No.	Part No.	Description			Remark
		< CAPACITOR >			
C501	1-126-154-11	ELECT	47uF	20%	6.3V
C502	1-162-282-31	CERAMIC	100PF	10%	50V
C503	1-126-154-11	ELECT	47uF	20%	6.3V
C504	1-162-294-31	CERAMIC	0.001uF	10%	50V
C505	1-162-294-31	CERAMIC	0.001uF	10%	50V
C508	1-162-294-31	CERAMIC	0.001uF	10%	50V
C509	1-164-159-11	CERAMIC	0.1uF		50V
C510	1-164-159-11	CERAMIC	0.1uF		50V
C552	1-126-157-11	ELECT	10uF	20%	16V
C590	1-162-294-31	CERAMIC	0.001uF	10%	50V
C600	1-162-306-11	CERAMIC	0.01uF	30%	16V
C601	1-162-306-11	CERAMIC	0.01uF	30%	16V
C602	1-162-306-11	CERAMIC	0.01uF	30%	16V
C603	1-124-257-00	ELECT	2.2uF	20%	50V
C604	1-162-303-11	CERAMIC	0.0033uF	30%	16V
C605	1-162-303-11	CERAMIC	0.0033uF	30%	16V
C606	1-162-306-11	CERAMIC	0.01uF	30%	16V
C607	1-124-257-00	ELECT	2.2uF	20%	50V
C608	1-162-294-31	CERAMIC	0.001uF	10%	50V
C609	1-162-294-31	CERAMIC	0.001uF	10%	50V
C610	1-162-306-11	CERAMIC	0.01uF	30%	16V
C611	1-124-257-00	ELECT	2.2uF	20%	50V
C612	1-162-286-31	CERAMIC	220PF	10%	50V
C613	1-162-286-31	CERAMIC	220PF	10%	50V
C614	1-162-306-11	CERAMIC	0.01uF	30%	16V
C615	1-124-257-00	ELECT	2.2uF	20%	50V
		< CONNECTOR >			
CN501	1-568-860-11	SOCKET, CONNECTOR 17P			
* CN503	1-568-945-11	PIN, CONNECTOR 7P			
		< DIODE >			
D504	8-719-052-43	DIODE	SML59420C-TP4 (▶II)		
D505	8-719-300-71	LED	SEL2210R (REC)		
D507	8-719-301-59	DIODE	SEL2910A (POPS)		
D508	8-719-301-59	DIODE	SEL2910A (CLASSIC)		
D509	8-719-300-71	LED	SEL2210R (DBFB)		
D510	8-719-301-59	DIODE	SEL2910A (CD)		
D511	8-719-812-44	LED	TL0124 (ENTER/NEXT)		
D519	8-719-329-10	DIODE	SEL2910D-TP3 (PAUSE)		
D520	8-719-301-59	DIODE	SEL2910A (ROCK)		
D521	8-719-301-59	DIODE	SEL2910A (JAZZ)		
D522	8-719-301-59	DIODE	SEL2910A (DANCE:EXCEPT E2, AR, MX, SALSA:E2, AR,MX)		
D523	8-719-301-59	DIODE	SEL2910A (TUNER)		
D524	8-719-301-59	DIODE	SEL2910A (TIMER)		
D525	8-719-301-43	DIODE	SEL2410E-C-TP6 (TUNER/BND)		

Ref. No.	Part No.	Description	Remark
D529	8-719-014-73	DIODE UZP-5.6BC-TP	
D530	8-719-987-63	DIODE 1N4148M	
D531	8-719-987-63	DIODE 1N4148M	
D532	8-719-987-63	DIODE 1N4148M	
D533	8-719-987-63	DIODE 1N4148M	
D541	8-719-301-59	DIODE SEL2910A (ROCK)	
D542	8-719-301-59	DIODE SEL2910A (JAZZ)	
D543	8-719-301-59	DIODE SEL2910A (DANCE:EXCEPT E2, AR, MX, SALSA:E2, AR, MX)	
D544	8-719-301-59	DIODE SEL2910A (POPS)	
D545	8-719-301-59	DIODE SEL2910A (CLASSIC)	
		< FILTER >	
FL501	1-517-341-21	INDICATOR TUBE, FLUORESCENT	
		< IC >	
IC501	8-752-866-01	IC CXP82612-009Q	
IC502	8-749-923-43	IC GP1U57XB	
IC503	8-759-634-51	IC M5218AP	
IC504	8-759-634-51	IC M5218AP	
		< TRANSISTOR >	
Q501	8-729-422-57	TRANSISTOR UN4111	
Q502	8-729-118-01	TRANSISTOR 2SB1116-K	
Q503	8-729-118-01	TRANSISTOR 2SB1116-K	
Q507	8-729-119-76	TRANSISTOR 2SA1175-HFE	
Q511	8-729-119-76	TRANSISTOR 2SA1175-HFE	
Q512	8-729-119-76	TRANSISTOR 2SA1175-HFE	
Q513	8-729-119-76	TRANSISTOR 2SA1175-HFE	
Q514	8-729-119-76	TRANSISTOR 2SA1175-HFE	
Q515	8-729-119-76	TRANSISTOR 2SA1175-HFE	
Q516	8-729-119-76	TRANSISTOR 2SA1175-HFE	
Q517	8-729-119-76	TRANSISTOR 2SA1175-HFE	
Q518	8-729-119-76	TRANSISTOR 2SA1175-HFE	
Q519	8-729-119-76	TRANSISTOR 2SA1175-HFE	
Q520	8-729-119-76	TRANSISTOR 2SA1175-HFE	
		< RESISTOR >	
R501	1-249-429-11	CARBON 10K 5% 1/4W	
R502	1-249-429-11	CARBON 10K 5% 1/4W	
R503	1-249-429-11	CARBON 10K 5% 1/4W	
R504	1-249-429-11	CARBON 10K 5% 1/4W	
R505	1-249-429-11	CARBON 10K 5% 1/4W	
R506	1-249-429-11	CARBON 10K 5% 1/4W	
R507	1-249-429-11	CARBON 10K 5% 1/4W	
R508	1-249-429-11	CARBON 10K 5% 1/4W	
R509	1-249-429-11	CARBON 10K 5% 1/4W	
R510	1-249-429-11	CARBON 10K 5% 1/4W	
R511	1-249-419-11	CARBON 1.5K 5% 1/4W	
R512	1-247-811-31	CARBON 150 5% 1/4W	
R513	1-249-410-11	CARBON 270 5% 1/4W	
R514	1-249-408-11	CARBON 180 5% 1/4W	
R515	1-249-409-11	CARBON 220 5% 1/4W	
R516	1-249-411-11	CARBON 330 5% 1/4W	
R517	1-249-413-11	CARBON 470 5% 1/4W	
R518	1-247-807-31	CARBON 100 5% 1/4W	
R519	1-249-409-11	CARBON 220 5% 1/4W	
R520	1-247-811-31	CARBON 150 5% 1/4W	
R521	1-247-807-31	CARBON 100 5% 1/4W	
R522	1-249-409-11	CARBON 220 5% 1/4W	
R524	1-249-419-11	CARBON 1.5K 5% 1/4W	
R525	1-247-811-31	CARBON 150 5% 1/4W	
R526	1-249-410-11	CARBON 270 5% 1/4W	
R527	1-249-408-11	CARBON 180 5% 1/4W	
R537	1-249-419-11	CARBON 1.5K 5% 1/4W	
R538	1-247-811-31	CARBON 150 5% 1/4W	
R539	1-249-410-11	CARBON 270 5% 1/4W	
R540	1-249-408-11	CARBON 180 5% 1/4W	
R541	1-249-409-11	CARBON 220 5% 1/4W	
R542	1-249-411-11	CARBON 330 5% 1/4W	
R543	1-249-413-11	CARBON 470 5% 1/4W	
R544	1-249-414-11	CARBON 560 5% 1/4W	
R545	1-249-416-11	CARBON 820 5% 1/4W	
R546	1-249-418-11	CARBON 1.2K 5% 1/4W	
R547	1-249-420-11	CARBON 1.8K 5% 1/4W	
R548	1-249-423-11	CARBON 3.3K 5% 1/4W	
R549	1-249-427-11	CARBON 6.8K 5% 1/4W	
R550	1-249-419-11	CARBON 1.5K 5% 1/4W	
R551	1-249-419-11	CARBON 1.5K 5% 1/4W	
R552	1-247-807-31	CARBON 100 5% 1/4W	
R557	1-249-414-11	CARBON 560 5% 1/4W	
R558	1-249-416-11	CARBON 820 5% 1/4W	
R559	1-249-418-11	CARBON 1.2K 5% 1/4W	
R560	1-249-420-11	CARBON 1.8K 5% 1/4W	
R561	1-249-423-11	CARBON 3.3K 5% 1/4W	
R563	1-247-903-00	CARBON 1M 5% 1/4W	
R564	1-247-807-31	CARBON 100 5% 1/4W	
R565	1-247-807-31	CARBON 100 5% 1/4W	
R566	1-247-807-31	CARBON 100 5% 1/4W	
R567	1-247-807-31	CARBON 100 5% 1/4W	
R568	1-247-807-31	CARBON 100 5% 1/4W	
R569	1-249-429-11	CARBON 10K 5% 1/4W	
R570	1-249-421-11	CARBON 2.2K 5% 1/4W	
R571	1-249-429-11	CARBON 10K 5% 1/4W	
R572	1-249-421-11	CARBON 2.2K 5% 1/4W	
R576	1-249-404-00	CARBON 82 5% 1/4W	
R577	1-247-807-31	CARBON 100 5% 1/4W	

PANEL POLAR

Ref. No.	Part No.	Description				Remark
R578	1-247-811-31	CARBON	150	5%	1/4W	
R579	1-247-811-31	CARBON	150	5%	1/4W	
R581	1-247-807-31	CARBON	100	5%	1/4W	
R582	1-247-807-31	CARBON	100	5%	1/4W	
R583	1-247-807-31	CARBON	100	5%	1/4W	
R584	1-249-404-00	CARBON	82	5%	1/4W	
R585	1-249-409-11	CARBON	220	5%	1/4W	
R586	1-249-409-11	CARBON	220	5%	1/4W	
R587	1-249-409-11	CARBON	220	5%	1/4W	
R588	1-249-409-11	CARBON	220	5%	1/4W	
R589	1-249-421-11	CARBON	2.2K	5%	1/4W	
R590	1-247-807-31	CARBON	100	5%	1/4W	
R591	1-247-807-31	CARBON	100	5%	1/4W	
R592	1-247-807-31	CARBON	100	5%	1/4W	
R593	1-249-429-11	CARBON	10K	5%	1/4W	
R596	1-249-429-11	CARBON	10K	5%	1/4W	
R600	1-249-435-11	CARBON	33K	5%	1/4W	
R601	1-249-441-11	CARBON	100K	5%	1/4W	
R602	1-247-895-00	CARBON	470K	5%	1/4W	
R604	1-249-435-11	CARBON	33K	5%	1/4W	
R605	1-249-441-11	CARBON	100K	5%	1/4W	
R606	1-247-895-00	CARBON	470K	5%	1/4W	
R608	1-249-435-11	CARBON	33K	5%	1/4W	
R609	1-249-441-11	CARBON	100K	5%	1/4W	
R610	1-247-895-00	CARBON	470K	5%	1/4W	
R612	1-249-435-11	CARBON	33K	5%	1/4W	
R613	1-249-441-11	CARBON	100K	5%	1/4W	
R614	1-247-895-00	CARBON	470K	5%	1/4W	
R616	1-249-437-11	CARBON	47K	5%	1/4W	
R617	1-249-437-11	CARBON	47K	5%	1/4W	
R618	1-249-437-11	CARBON	47K	5%	1/4W	
R619	1-249-437-11	CARBON	47K	5%	1/4W	
R654	1-247-811-31	CARBON	150	5%	1/4W	
R655	1-247-811-31	CARBON	150	5%	1/4W	
R656	1-247-811-31	CARBON	150	5%	1/4W	
R657	1-247-811-31	CARBON	150	5%	1/4W	

< SWITCH >

S501	1-467-869-11	ENCODER, ROTARY (VOLUME)
S504	1-572-184-11	SWITCH, KEYBOARD (CLOCK SET)
S505	1-572-184-11	SWITCH, KEYBOARD (DISPLAY)
S506	1-572-184-11	SWITCH, KEYBOARD (FUNCTION)
S507	1-572-184-11	SWITCH, KEYBOARD (▶II)
S508	1-572-184-11	SWITCH, KEYBOARD (■)
S509	1-572-184-11	SWITCH, KEYBOARD (⏏ OPEN/CLOSE)
S516	1-572-184-11	SWITCH, KEYBOARD (DBFB)
S517	1-572-184-11	SWITCH, KEYBOARD (TUNER MEMORY)
S518	1-572-184-11	SWITCH, KEYBOARD (ENTER/NEXT)
S519	1-572-184-11	SWITCH, KEYBOARD (TUNER/BAND)
S529	1-572-184-11	SWITCH, KEYBOARD (ROCK)
S530	1-572-184-11	SWITCH, KEYBOARD (POPS)
S531	1-572-184-11	SWITCH, KEYBOARD (JAZZ)
S532	1-572-184-11	SWITCH, KEYBOARD (CLASSIC)
S533	1-572-184-11	SWITCH, KEYBOARD (DANCE:EXCEPT E2, AR, MX, SALSA:E2, AR, MX)
S534	1-572-184-11	SWITCH, KEYBOARD (TIMER SET)
S535	1-572-184-11	SWITCH, KEYBOARD (DAILY)
S536	1-572-184-11	SWITCH, KEYBOARD (TIMER REC)
S537	1-572-184-11	SWITCH, KEYBOARD (PROGRAM)
S538	1-572-184-11	SWITCH, KEYBOARD (SHUFFLE)
S539	1-572-184-11	SWITCH, KEYBOARD (CONTINUE)
S540	1-572-184-11	SWITCH, KEYBOARD (TUNING MODE)
S541	1-572-184-11	SWITCH, KEYBOARD (MONO)
S548	1-572-184-11	SWITCH, KEYBOARD (DOLBY NR)
S549	1-572-184-11	SWITCH, KEYBOARD (DIRECTION MODE)
S550	1-572-184-11	SWITCH, KEYBOARD (CD SYNCHRO)
S551	1-572-184-11	SWITCH, KEYBOARD (HI SPEED DUBBING)
S552	1-572-184-11	SWITCH, KEYBOARD (REC)
S553	1-572-184-11	SWITCH, KEYBOARD (PAUSE)
S557	1-572-184-11	SWITCH, KEYBOARD (SYSTEM POWER)

< VIBRATOR >

X501	1-567-819-11	VIBRATOR, CERAMIC (4MHz)

****

*	A-4377-454-A	POLAR BOARD, COMPLETE (CIS)				

****

< CAPACITOR >

C1701	1-162-294-31	CERAMIC	0.001uF	10%	50V
C1702	1-130-014-00	FILM	470PF	5%	50V
C1703	1-124-902-00	ELECT	0.47uF	20%	50V
C1704	1-124-902-00	ELECT	0.47uF	20%	50V
C1705	1-164-098-11	CERAMIC	0.047uF		12V
C1706	1-124-903-11	ELECT	1uF	20%	50V
C1707	1-162-288-31	CERAMIC	330PF	10%	50V
C1710	1-137-364-11	FILM	0.001uF	5%	50V
C1711	1-137-364-11	FILM	0.001uF	5%	50V
C1712	1-130-736-11	FILM	0.01uF	5%	50V
C1713	1-130-736-11	FILM	0.01uF	5%	50V
C1714	1-124-903-11	ELECT	1uF	20%	50V
C1715	1-124-903-11	ELECT	1uF	20%	50V
C1716	1-124-903-11	ELECT	1uF	20%	50V

www.manualscenter.com

Ref. No.	Part No.	Description				Remark
C1720	1-162-306-11	CERAMIC	0.01uF	30%	16V	
C1723	1-162-306-11	CERAMIC	0.01uF	30%	16V	
C1724	1-162-306-11	CERAMIC	0.01uF	30%	16V	
C1725	1-124-477-11	ELECT	47uF	20%	25V	
C1726	1-124-903-11	ELECT	1uF	20%	50V	
C1727	1-124-903-11	ELECT	1uF	20%	50V	
C1728	1-104-792-51	ELECT	33uF	20%	16V	
		< CONNECTOR >				
* CN1701	1-568-832-11	SOCKET, CONNECTOR 13P				
		< TRIMMER >				
CT1701	1-141-260-00	CAP, TRIMMER	50PF			
		< DIODE >				
D1701	8-719-987-63	DIODE	1N4148M			
D1703	8-719-987-63	DIODE	1N4148M			
D1704	8-719-987-63	DIODE	1N4148M			
D1705	8-719-987-63	DIODE	1N4148M			
		< IC >				
IC1701	8-759-063-04	IC	IR3R42			
IC1703	8-759-140-53	IC	uPD4053BC			
		< COIL >				
L1701	1-409-497-11	COIL (FILTER)				
		< TRANSISTOR >				
Q1701	8-729-900-61	TRANSISTOR	DTA114ES			
Q1702	8-729-900-80	TRANSISTOR	DTC114ES			
Q1704	8-729-900-80	TRANSISTOR	DTC114ES			
		< RESISTOR >				
R1701	1-249-433-11	CARBON	22K	5%	1/4W	
R1702	1-249-435-11	CARBON	33K	5%	1/4W	
R1703	1-249-427-11	CARBON	6.8K	5%	1/4W	
R1704	1-247-858-11	CARBON	13K	5%	1/4W	
R1705	1-249-417-11	CARBON	1K	5%	1/4W	
R1706	1-249-417-11	CARBON	1K	5%	1/4W	
R1707	1-249-441-11	CARBON	100K	5%	1/4W	
R1708	1-249-440-11	CARBON	82K	5%	1/4W	
R1709	1-249-439-11	CARBON	68K	5%	1/4W	
R1710	1-249-439-11	CARBON	68K	5%	1/4W	
R1711	1-249-439-11	CARBON	68K	5%	1/4W	
R1714	1-249-441-11	CARBON	100K	5%	1/4W	
R1715	1-249-441-11	CARBON	100K	5%	1/4W	
R1716	1-249-441-11	CARBON	100K	5%	1/4W	
R1717	1-249-441-11	CARBON	100K	5%	1/4W	
R1718	1-249-429-11	CARBON	10K	5%	1/4W	
R1719	1-249-429-11	CARBON	10K	5%	1/4W	
R1721	1-249-434-11	CARBON	27K	5%	1/4W	
R1722	1-249-441-11	CARBON	100K	5%	1/4W	
		< VARIABLE RESISTOR >				
RV1701	1-238-600-11	RES, ADJ, CARBON 10K				
RV1702	1-238-599-11	RES, ADJ, CARBON 4.7K				
		< TEST PIN >				
* TP1701	1-560-061-00	PIN, CONNECTOR 3P				
* TP1702	1-560-061-00	PIN, CONNECTOR 3P				

****

*	A-4377-364-A	POWER BOARD, COMPLETE				
		**********				
		(E, EA, AR, HK, MX, MY, SP, AUS)				
*	A-4377-370-A	POWER BOARD, COMPLETE (CND)				
		**********				
*	A-4377-376-A	POWER BOARD, COMPLETE (AE1, EE, CIS)				
		**********				
*	A-4377-377-A	POWER BOARD, COMPLETE (AE2, IT, UK)				
		**********				
*	A-4377-708-A	POWER BOARD, COMPLETE (G)				
		**********				
*	4-942-204-01	PLATE, GROUND				
		< CAPACITOR >				
C901	1-124-927-11	ELECT	4.7uF	20%	100V	
C902	1-162-292-31	CERAMIC	680PF	10%	50V	
C903	1-162-286-31	CERAMIC	220PF	10%	50V	
C904	1-128-551-11	ELECT	22uF	20%	50V	
C905	1-126-967-11	ELECT	47uF	20%	50V	
C906	1-124-122-11	ELECT	100uF	20%	50V	
			(CND, AEP, G, IT, EE, UK, CIS)			

POWER

Ref. No.	Part No.	Description	Remark
C906	1-128-576-11	ELECT 100uF 20% 63V	(E, EA, AR, HK, MX, MY, SP, AUS)
C908	1-128-551-11	ELECT 22uF 20% 50V	
C910	1-136-495-11	FILM 0.068uF 5% 50V	
C911	1-136-495-11	FILM 0.068uF 5% 50V	
C920	1-126-923-11	ELECT 220uF 20% 10V	
C925	1-162-284-31	CERAMIC 150PF 10% 50V	
C951	1-124-927-11	ELECT 4.7uF 20% 100V	
C952	1-162-292-31	CERAMIC 680PF 10% 50V	
C953	1-162-286-31	CERAMIC 220PF 10% 50V	
C954	1-128-551-11	ELECT 22uF 20% 50V	
C955	1-126-967-11	ELECT 47uF 20% 50V	
C956	1-124-122-11	ELECT 100uF 20% 50V	(CND, AEP, G, IT, EE, UK, CIS)
C956	1-128-576-11	ELECT 100uF 20% 63V	(E, EA, AR, HK, MX, MY, SP, AUS)
C960	1-136-495-11	FILM 0.068uF 5% 50V	
C961	1-136-495-11	FILM 0.068uF 5% 50V	
		< CONNECTOR >	
CN901	1-691-770-11	PLUG (MICRO CONNECTOR) 8P	
CN902	1-691-765-11	PLUG (MICRO CONNECTOR) 3P	
		< DIODE >	
D901	8-719-987-63	DIODE 1N4148M	
D902	8-719-987-63	DIODE 1N4148M	
D903	8-719-987-63	DIODE 1N4148M	
D951	8-719-987-63	DIODE 1N4148M	
		< IC >	
IC901	8-749-900-96	IC STK-4142MK2	(CND, AEP, G, IT, EE, UK, CIS)
IC901	8-749-900-34	IC STK-4182MK2	(E, EA, AR, HK, MX, MY, SP, AUS)
		< TRANSISTOR >	
Q901	8-729-140-84	TRANSISTOR 2SC1841-PAFAEA	(CND, E, EA, AR, HK, MX, MY, SP, AUS)
Q901	8-729-116-83	TRANSISTOR 2SD1616-K	(AEP, G, IT, EE, UK, CIS)
Q951	8-729-140-84	TRANSISTOR 2SC1841-PAFAEA	(CND, E, EA, AR, HK, MX, MY, SP, AUS)
Q951	8-729-116-83	TRANSISTOR 2SD1616-K	(AEP, G, IT, EE, UK, CIS)
		< RESISTOR >	
R901	1-249-417-11	CARBON 1K 5% 1/4W	
R902	1-249-437-11	CARBON 47K 5% 1/4W	
R903	1-249-417-11	CARBON 1K 5% 1/4W	
R904	1-249-437-11	CARBON 47K 5% 1/4W	
R905	1-249-425-11	CARBON 4.7K 5% 1/4W	
R906	1-249-425-11	CARBON 4.7K 5% 1/4W	
R907	1-249-425-11	CARBON 4.7K 5% 1/4W	
R908	1-249-425-11	CARBON 4.7K 5% 1/4W	
⚠R909	1-212-881-11	FUSIBLE 100 5% 1/4W	
⚠R910	1-217-151-00	RES, METAL PLATE 0.22 10% 2W	(CND, AEP, G, IT, EE, UK, CIS)
⚠R910	1-217-156-00	RES, METAL PLATE 0.22 10% 5W	(E, EA, AR, HK, MX, MY, SP, AUS)
R911	1-249-417-11	CARBON 1K 5% 1/4W	
R912	1-249-431-11	CARBON 15K 5% 1/4W	
R913	1-249-441-11	CARBON 100K 5% 1/4W	
R914	1-249-421-11	CARBON 2.2K 5% 1/4W	
R915	1-249-421-11	CARBON 2.2K 5% 1/4W	
R916	1-249-421-11	CARBON 2.2K 5% 1/4W	
R917	1-249-421-11	CARBON 2.2K 5% 1/4W	
R918	1-249-397-11	CARBON 22 5% 1/4W	
R919	1-249-397-11	CARBON 22 5% 1/4W	
R927	1-249-429-11	CARBON 10K 5% 1/4W	
R928	1-249-441-11	CARBON 100K 5% 1/4W	
R930	1-249-429-11	CARBON 10K 5% 1/4W	
R942	1-249-429-11	CARBON 10K 5% 1/4W	
⚠R944	1-217-637-00	FUSIBLE 1 5% 1/4W	
R951	1-249-417-11	CARBON 1K 5% 1/4W	
R952	1-249-437-11	CARBON 47K 5% 1/4W	
R953	1-249-417-11	CARBON 1K 5% 1/4W	
R954	1-249-437-11	CARBON 47K 5% 1/4W	
R955	1-249-425-11	CARBON 4.7K 5% 1/4W	
R956	1-249-425-11	CARBON 4.7K 5% 1/4W	
R957	1-249-425-11	CARBON 4.7K 5% 1/4W	
R958	1-249-425-11	CARBON 4.7K 5% 1/4W	
⚠R959	1-212-881-11	FUSIBLE 100 5% 1/4W	
⚠R960	1-217-151-00	RES, METAL PLATE 0.22 10% 2W	(CND, AEP, G, IT, EE, UK, CIS)
⚠R960	1-217-156-00	RES, METAL PLATE 0.22 10% 5W	(E, EA, AR, HK, MX, MY, SP, AUS)
R961	1-249-417-11	CARBON 1K 5% 1/4W	
R962	1-249-431-11	CARBON 15K 5% 1/4W	
R963	1-249-441-11	CARBON 100K 5% 1/4W	
R968	1-249-397-11	CARBON 22 5% 1/4W	
R969	1-249-397-11	CARBON 22 5% 1/4W	

****

The components identified by mark ⚠ or dotted line with mark ⚠ are critical for safety. Replace only with part number specified.	Les composants identifiés par une marque ⚠ sont critiques pour la sécurité. Ne les remplacer que par une pièce portant le numéro spécifié.

Ref. No.	Part No.	Description	Remark
*	1-655-376-11	TC SW BOARD	
		**********	
		< CONNECTOR >	
CN505	1-568-954-11	PIN, CONNECTOR (STRAIGHT) 5P	
		< DIODE >	
D512	8-719-033-06	DIODE SEL5920A (A)	
D513	8-719-046-42	DIODE SEL5421E-TH8F (▶)	
D526	8-719-033-06	DIODE SEL5920A (B)	
D527	8-719-046-42	DIODE SEL5421E-TH8F (◀)	
		< RESISTOR >	
R528	1-249-409-11	CARBON 220 5% 1/4W	
R529	1-249-411-11	CARBON 330 5% 1/4W	
R530	1-249-413-11	CARBON 470 5% 1/4W	
R531	1-249-414-11	CARBON 560 5% 1/4W	
R532	1-249-416-11	CARBON 820 5% 1/4W	
R533	1-249-418-11	CARBON 1.2K 5% 1/4W	
R534	1-249-420-11	CARBON 1.8K 5% 1/4W	
		< SWITCH >	
S520	1-572-184-11	SWITCH, KEYBOARD (A DECK/B DECK)	
S521	1-572-184-11	SWITCH, KEYBOARD (▶)	
S522	1-572-184-11	SWITCH, KEYBOARD (◀)	
S523	1-572-184-11	SWITCH, KEYBOARD (■)	
S524	1-572-184-11	SWITCH, KEYBOARD (▶▶)	
S525	1-572-184-11	SWITCH, KEYBOARD (◀◀)	

****

Ref. No.	Part No.	Description	Remark
*	1-655-380-11	TRANSFORMER BOARD	
		**********	
		< CAPACITOR >	
C548	1-164-159-11	CERAMIC 0.1uF 50V	
		< CONNECTOR >	
* CN801	1-564-526-11	PLUG, CONNECTOR 11P	
CN851	1-564-321-00	PIN, CONNECTOR 2P	
		< FUSE >	
⚠F801	1-532-259-00	FUSE (T250V 1.6A) (E, EA, AR, HK, MX, MY, SP, AUS)	
⚠F801	1-532-743-11	FUSE, GLASS CYLINDRICAL (DIA.5) (125V 2A) (CND)	
⚠F802	1-532-215-00	FUSE (T250V 0.8A) (E, EA, AR, HK, MX, MY, SP, AUS)	
⚠F802	1-532-284-00	FUSE (T250V 0.63A) (AEP, G, IT, EE, UK, CIS)	
		< RESISTOR >	
⚠R800	1-202-725-00	SOLID 3.3M 10% 1/2W (CND)	
		< SWITCH >	
⚠S801	1-572-675-11	SWITCH, POWER VOLTAGE CHANGE (VOLTAGE SELECTOR) (E, EA, AR, HK, SP)	
		< TRANSFORMER >	
⚠T801	1-427-793-12	TRANSFORMER, POWER (E, EA, AR, HK, MX, MY, SP, AUS)	
⚠T801	1-427-801-12	TRANSFORMER, POWER (AEP, G, IT, EE, UK, CIS)	
⚠T801	1-427-813-12	TRANSFORMER, POWER (CND)	

****

Ref. No.	Part No.	Description	Remark
		MISCELLANEOUS	
		**********	
⚠10	1-569-007-11	ADAPTER, CONVERSION 2P (E3)	
⚠10	1-569-008-11	ADAPTER, CONVERSION 2P (EA, SP, AR)	
⚠10	1-770-019-11	ADAPTOR, CONVERSION (HK)	
15	1-590-036-31	WIRE (FLAT TYPE) (13 CORE) (CIS)	
63	1-751-713-11	WIRE (FLAT TYPE) (21 CORE) (UK1)	
63	1-769-689-11	WIRE (FLAT TYPE) (21 CORE) (EXCEPT UK1)	
64	1-769-404-11	WIRE (FLAT TYPE) (11 CORE) (UK1)	
64	1-769-688-11	WIRE (FLAT TYPE) (11 CORE) (EXCEPT UK1)	
126	1-696-060-11	WIRE, PARALLEL (FFC) (17 CORE) (UK1)	
126	1-769-690-11	WIRE (FLAT TYPE) (17 CORE) (EXCEPT UK1)	
252	1-452-719-11	MAGNET ASSY	
262	1-751-806-11	WIRE (FLAT TYPE) (5 CORE)	
⚠304	8-848-376-11	DEVICE, OPTICAL KSS-213B/S-N	
305	1-769-069-11	WIRE (FLAT TYPE) (16 CORE)	
⚠CNP801	1-575-651-11	CORD, POWER (AEP, G, IT, EE, EA, CIS, AR, HK, MY, SP)	
⚠CNP801	1-575-653-11	CORD, POWER (E, MX)	
⚠CNP801	1-690-609-21	CORD, POWER (CND)	
⚠CNP801	1-696-847-11	CORD, POWER (AUS)	
⚠CNP801	1-751-520-21	CORD, POWER (UK)	
HP101	1-500-093-11	HEAD, MAGNETIC (PLAYBACK) (DECK-A)	
HRPE101	1-500-094-11	HEAD, MAGNETIC (REC/PB/ERASE) (DECK-B)	
M1	X-3369-110-1	MOTOR ASSY (CAPSTAN)	
M2	X-3369-111-1	MOTOR ASSY (TRIGGER)	
M101	X-4917-523-3	BASE (OUTSERT) ASSY (SPINDLE MOTOR)	
M102	X-4917-504-1	MOTOR ASSY (SLED MOTOR)	
M903	A-4604-363-A	MOTOR (L) ASSY (LOADING)	

****

The components identified by mark ⚠ or dotted line with mark ⚠ are critical for safety. Replace only with part number specified.	Les composants identifiés par une marque ⚠ sont critiques pour la sécurité. Ne les remplacer que par une pièce portant le numéro spécifié.

www.manualscenter.com

Ref. No.	Part No.	Description	Remark
		ACCESSORIES & PACKING MATERIALS	
		**********	
	1-467-967-11	REMOTE COMMANDER (RM-S33) (UK)	
	1-501-374-11	ANTENNA, LOOP (UK)	
	1-501-594-11	ANTENNA (FM) (UK)	
	4-941-762-01	COVER (MLY), BATTERY (for RM-S33) (UK)	
	3-798-757-11	MANUAL, INSTRUCTION (ENGLISH) (UK)	
*	4-972-288-01	CUSHION (FRONT)	
*	4-972-289-01	CUSHION (REAR)	
*	4-973-942-01	INDIVIDUAL CARTON (UK)	

****

****
HARDWARE LIST
****

#3	7-685-646-79	SCREW +BVTP 3X8 TYPE2 N-S
#5	7-621-770-67	SCREW +BVTT 2.6X6 (S)
#6	7-621-775-00	SCREW +B 2.6X3
#7	7-621-775-10	SCREW +B 2.6X4
#8	7-623-921-01	RING, RETAINING, CAPSTAN
#9	7-685-533-19	SCREW +BTP 2.6X6 TYPE2 N-S
#10	7-685-534-19	SCREW +BTP 2.6X8 TYPE2 N-S
#11	7-621-255-15	SCREW +P 2X3
#12	7-685-650-79	SCREW +BVTP 3X16 TYPE2 IT-3
#13	7-682-548-04	SCREW +BVTT 3X8 (S)
#15	7-685-871-01	SCREW +BVTT 3X6 (S)
#16	7-685-131-19	SCREW +BTP 2.6X4 TYPE2 N-S

English
95B0590-1
Printed in Japan
© 1995. 2

9-960-111-11

Sony Corporation
Consumer A&V Products Company
Home A&V Products Div.

Published by Home A&V Products Div.
Quality Engineering Dept.