ICF-SW100E/SW100S

AN-100

SERVICE MANUAL

• The ICF-SW100S and ICF-SW100E differ only in supplied accessories.

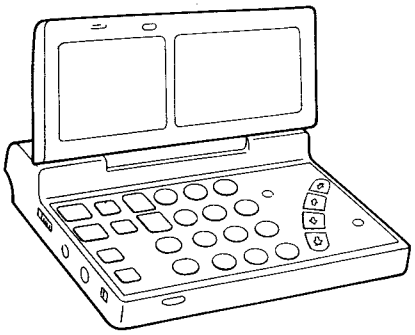

US Model
Canadian Model
Tourist Model
ICF-SW100S

AEP Model
E Model
ICF-SW100E/SW100S

UK Model
Australian Model
ICF-SW100E

SPECIFICATIONS

Circuit system: FM: Superheterodyne
SW/MW/LW: Dual conversion superheterodyne

Frequency range

Band	Italy model	Saudi Arabia model	Other models
FM	87.5–108.0 MHz	87.5–108.0 MHz	76.0–108.0 MHZ
SW	3850–26100 kHz	1621–26100 kHz	1621–29999 kHz
MW	530–1620 kHz	530–1620 kHz	530–1620 kHz
LW	150–285 kHz	150–285 kHz	150–529 kHz

Intermediate frequency: FM: 10.7 MHz
SW/MW/LW: 55.845 MHZ (first), 455 kHz (second)

Speaker: Approx. 40 mm (1 5/8 inches) dia, 8 ohms

Power output: 250 mW (at 10 % harmonic distortion)

Outputs: Recording output jack (stereo minijack)
output level 245 mV (–10 dBs)
output impedance 10 kilohm or less
Headphones jack (stereo minijack) 16 ohms

Power requirements: 3 V DC
Two R6 (size AA) batteries
AC power adaptor
AC-E312: 120 V, 60 Hz (for USA model)
AC-E314: 100–240 V, 50/60 Hz (for Canada model)
AC-E311/E313: 100–240 V, 50/60 Hz (for other models)
Optional DCC-E130L car battery

Battery life: Using Sony SUM-3 (NS) batteries:
FM: approx. 12 hours, AM: approx. 9 hours
Using Sony AM-3 (N) alkaline batteries:
FM: approx. 23 hours, AM: approx. 18 hours
(When listening for four hours a day at normal volume)

Dimensions: Approx. 110.6 × 23.5 × 72.6 mm (w/h/d)
(4 3/8 × 15/16 × 2 7/8 inches)
including projecting parts and controls

Mass: Approx. 220 g (7.8 oz) including batteries

Accessories supplied: ICF-SW100S:
Stereo headphones (1)
AC power adaptor (1)
AC plug adaptor (1)
Active antenna (1)
Suction cup (1)
Carrying case (1)
Wave handbook (1)
ICF-SW100E:
Stereo headphones (1)
Compact antenna (1)
Carrying case (1)
Wave handbook (1)

Note

This appliance conforms with EEC Directive 87/308/EEC regarding interference suppression.

Design and specifications subject to change without notice.

FM Stereo/SW/MW/LW
PLL Synthesized Receiver

SONY®

MICROFILM

www.manualscenter.com

FEATURES

- An FM stereo/SW/MW/LW receiver with worldwide band coverage.
- Quartz controlled PLL (Phase Locked Loop) synthesizer system using a microcomputer for easy pinpoint tuning. The tuned frequency is digitally displayed.
- FM stereo recepion for headphones.

Worldtime clock	Finding out the time anywhere in the world by selecting only the city name.
Preset tuning	Tuning in a preset station by selecting the name of the station. Up to 5 stations in every 10 paged memories can be preset for button-touch tuning.
Direct tuning	Tuning in the station by inputting the frequency of the station directly
Manual tuning	Even if you don't know the frequency of the station, you can tune in the station precisely.
Scan tuning	Automatic searching of a station
Editable label	Naming preset stations and one time zone with 6 characters.
Timer standby	Receiving a desired station at the desired time.
Sleep timer	Turning the radio off automatically in 60 minutes.
Power sources	Three different power sources: internal batteries, house current, car batteries.

The ICF-SW100S and ICF-SW100E differ only in supplied accessories. Sold type might be different from country to country.

The ICF-SW100S system includes the following components.
- FM stereo/SW/MW/LW PLL synthesized receiver ICF-SW100
- AC power adaptor: AC-E311 for the Saudi Arabia model, AC-E313 for the other models
- AC plug adaptor
- Active antenna AN-100
- Stereo headphones
- Carrying case

The ICF-SW100E system includes the following components.
- FM stereo/SW/MW/LW PLL synthesized receiver ICF-SW100
- Compact antenna AN-71 (supplied only for the Saudi Arabia model)
- Stereo headphones
- Carrying case

TABLE OF CONTENTS

Section *Title* *Page*

1. GENERAL

Location and Function of Controls ····· 3
Power Sources ····· 4
Setting the Clock ····· 4
Tuning in by Selecting a Preset Station Name ····· 5
Direct Tuning ····· 6
Manual Tuning ····· 6
Scan Tuning ····· 7
Prestting a Station ····· 7
Editing Labels ····· 8
Using the Standby Function ····· 8
Using the Sleep Timer ····· 9
For Better SW/MW/LW Reception ····· 9
Recording Radio Programs ····· 10

2. DISASSEMBLY

2-1. Chassis ····· 11
2-2. Cabinet (Rear) (Lid) ····· 11

3. ELECTRICAL ADJUSTMENTS ····· 12

4. DIAGRAMS

4-1. IC Pin Functions
•IC102 μPD1724GB-599-1A7
(PLL SINTHESIZER CONTROL) ····· 15
•IC603 MSM64164C-029
(MAIN SYSTEM CONTROL) ····· 16
•IC604 MSM64164C-030
(SUB SYSTEM CONTROL) ····· 17
4-2. Block Diagram ····· 18
4-3. Semiconductor Lead Layouts ····· 21
4-4. Schematic Diagram
— ACTIVE Antenna (AN-100) Section — ····· 23
4-5. Printed Wiring Board
— ACTIVE Antenna (AN-100) Section — ····· 25
4-6. Printed Wiring Board — Tuner Section — ····· 28
4-7. Schematic Diagram — Tuner Section — ····· 31
4-8. Schematic Diagram — Control Section — ····· 34
4-9. Printed Wiring Board — Control Section — ····· 37

5. EXPLODED VIEWS

5-1. MAIN Section ····· 39
5-2. Active Antenna (AN-100) Section ····· 40

6. ELECTRICAL PARTS LIST ····· 41

www.manualscenter.com

Location and Function of Controls

Refer to the pages indicated ( ) in for details.

Front

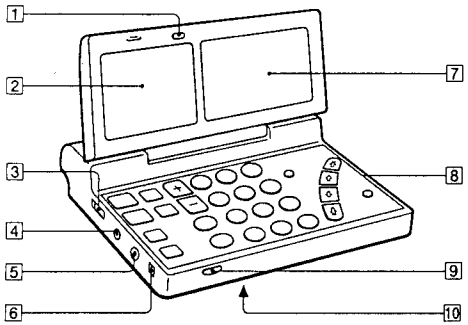

1 **LIGHT button**
Press this button to illuminate the display window for about 15 seconds.
2 **Speaker**
3 **MAIN POWER ON/OFF switch**
Set this switch to ON when using this radio. Set the switch to OFF when carrying the radio to prevent turning the power on accidentally.
4 **DC IN 3V (external power input) jack** (49)
5 **ACTIVE ANT jack** (69)
6 **SENS DX/LOCAL (FM/AM sensitivity) selector** (56)
7 **Display**
8 **Control panel**
9 **PUSH OPEN button**
10 **Carrying case attachment**
It is a tapped hole on the bottom. Fasten or unfasten the screw of the carrying case with a coin.

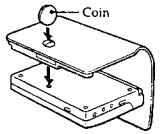

Rear

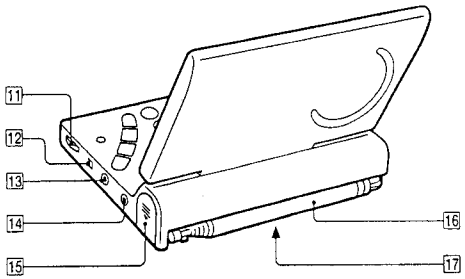

11 **VOL (volume) control**
12 **AM TONE/FM MODE switch**
In AM band: works as a tone selector
In FM band: works as a monaural/stereo selector
13 **LINE OUT (recording output) jack** (72)
14 **(headphones) jack**
When the stereo headphones are plugged in, no sound comes from the speaker. You can listen FM stereo.
15 **Battery compartment** (48)
16 **Telescopic antenna** (55)
17 **RESET button**
There is a button in the small hole. Press this button with an pointed object when the unit functions incorrectly because of an electric discharge caused by static electricity, etc. When this button is pressed, the clock is reset. The preset stations are permanently retained.

Control panel

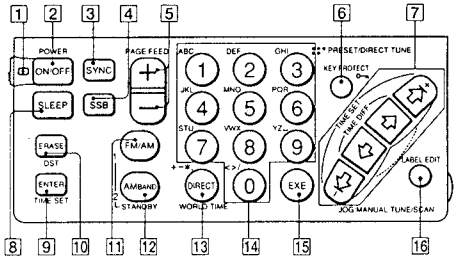

1 **Main power indicator**
2 **POWER ON/OFF button**
3 **SYNC button**
4 **SSB button** (not applied for the Saudi Arabia model)
5 **PAGE FEED +/– buttons**
6 **KEY PROTECT button**
7 **JOG/MANUAL TUNE/SCAN buttons**
8 **SLEEP button**
9 **ENTER/TIME SET button**
10 **ERASE/DST button**
11 **FM/AM/STANDBY 1 button**
12 **AM BAND/STANDBY 2 button**
13 **DIRECT/WORLD TIME button**
14 **PRESET/DIRECT TUNE buttons**
15 **EXE (execute) button**
16 **LABEL EDIT button**

Display

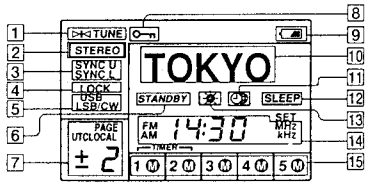

1 **Tuning indicator**
Appears when a station is tuned in.
2 **STEREO indicator**
Appears when a stereo program is tuned in.
3 **SYNC U/L (SYNC mode) indicators**
4 **LOCK (SYNC lock) indicator**
Appears when the synchronous detection is performed.
5 **USB/LSB/CW (SSB mode) indicators** (not applied for the Saudi Arabia model)
6 **STANDBY indicator**
Appears when the standby timer is reserved.
7 **Memory page/time difference display**
8 **Key protect indicator**
While this indicator appears, all the functions of the buttons are locked.
9 **Battery empty indicator**
10 **Label display**
Names of the preset stations, cities, broadcast bands, or meter bands are displayed.
• When the name of a preset station is displayed: (Frequency is displayed when the name is not preset.) — *95 . 75
• When the meter band descriptor is displayed: — 120mb
11 **World time indicator**
Appears when a world time is displayed.
12 **SLEEP indicator**
Appears when the sleep timer is operating.
13 **DST indicator**
Appears when the daylight saving time (summer time) is specified.
14 **Time/frequency display**
15 **Preset memory indicators**

This section is extracted from instruction manual.

Power Sources

Installing Batteries

Install two R6 (size AA) batteries with correct polarity.

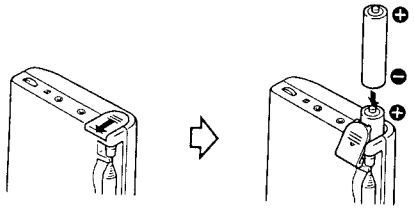

House Current

Use the AC-E311/E313 AC power adaptor (supplied only for the ICF-SW100S).

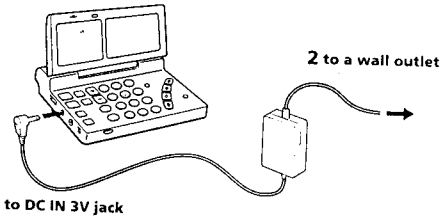

12V Car Battery

For use on 12 V car battery, connect the Sony DCC-E130L car battery cord (optional) to the DC IN 3V jack.

Note on the lid of the battery compartment
Do not open the lid forcibly. It cannot be fully opened as illustrated.

Note
When the batteries are removed for a long time, the clock and timer setting will be erased. In this case, set them again.

Battery replacement
- When the batteries are exhausted, the sound becomes weak or distorted and the indication flashes in the display. Replace all the batteries with new ones. When the batteries run down completely, the power is turned off and indication flashes.
- When removing the batteries, the indication stops flashing. Replace the batteries within ten minutes. Otherwise, the current time and the timer settings will be erased. However, the preset stations will not be erased.
- For battery life, see "Specifications".

Notes
- If the AC cord plug cannot be inserted to the wall outlet, use the supplied AC plug adaptor.
- The internal batteries are automatically disconnected when the AC power adaptor or the car battery cord is connected to the DC IN 3V jack.
- After using the AC power adaptor or the car battery cord, disconnect the DC IN 3V jack first. When the cord is connected to the DC IN 3V jack, the radio does not operate by the internal batteries.
- Keep the batteries installed for the built-in computer back-up even if you use the external power sources. However, replace the batteries once a year because they are discharged gradually.
- Use only the recommended AC power adaptor or car battery cord manufactured by Sony. The polarity of the plugs of other manufacturers may be different.

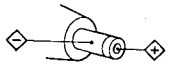
Polarity of the plug

Setting the Clock

Set the time when the radio is turned off.
Local time means the time in your area and world time means the time in a certain place in the world.

Setting the Local Current Time

The current time is set for the local time.
Before setting the clock, check the time difference between the local time in your area and the UTC (Universal Time Coordinated) time by referring to the table on page 52. Major city names and their time difference from the UTC are already memorized at the factory.

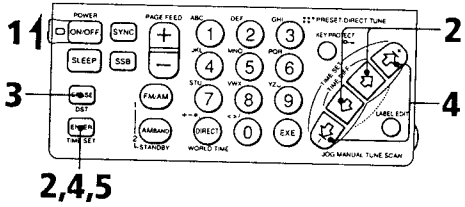

1 **Set MAIN POWER ON/OFF to ON.**
When you first install batteries or reset the clock, "0:00" flashes in the display. **Press TIME SET.**

2 **While holding down TIME SET, press inner buttons of JOG/MANUAL TUNE/SCAN** until your city name or the time difference between your local time and the UTC time appears in the display.

When even the world time indicator is displayed, the local time is specified by pressing TIME SET.

3 When daylight saving time (summer time) is not used in your area or is already displayed, skip this step.
Press DST if your area is now under daylight saving time.
appears in the display.

4 **While holding down TIME SET, press outer buttons of JOG/MANUAL TUNE/SCAN** to adjust the clock to the current local time. Every pressing JOG/MANUAL TUNE/SCAN changes the time setting by one minute. To advance the time digits rapidly, keep JOG/MANUAL TUNE/SCAN pressed.

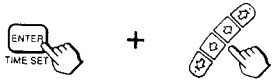

5 **Release TIME SET.**
The " : " indication starts flashing, and the clock begins to operate.

While listening to the radio
You cannot set the clock while you are listening to the radio. Be sure to press POWER ON/OFF to turn the radio off and then set the clock.

The display when MAIN POWER ON/OFF is OFF
The current time is displayed.

Zero second adjustment
If you want to adjust the time exactly to the second with a telephone time signal, proceed as in the following example.
Example: To set to 19:15
1 Adjust the time indication to 19:15 in step 4 above, and keep TIME SET pressed.
2 Release TIME SET simultaneously with the telephone time signal. The clock will operate showing the precise time.

For Areas Where Daylight Saving Time (Summer Time) Is Used

Press DST during the summer time period to make appear, as stated in step 3 above, and press again at the end of the summer time. The time indication will be changed automatically. When the clock has been set during the standard time period, press DST at the beginning of the daylight saving time. The time indication will change to the daylight saving time indication.

www.manualscenter.com — 6 —

Direct Tuning

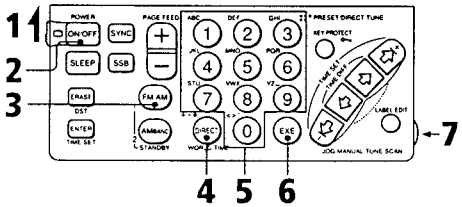

Examples

FM 92.5 MHz

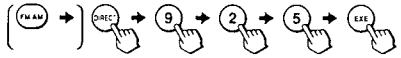

AM 1242 kHz

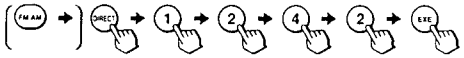

AM 1000 kHz

AM 21000 kHz

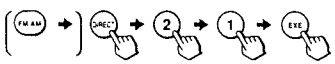

1 **Set MAIN POWER ON/OFF to ON.**
2 **Press POWER ON/OFF.** The radio is turned on.
3 **Press FM/AM** to select the band (FM or AM).
4 **Press DIRECT.** The frequency in the display is erased.
5 **Enter the frequency of the desired station directly by pressing the PRESET/DIRECT TUNE buttons 0 - 9.** You should press a button within 10 seconds after pressing the precedent button.
Minimum entry digit
AM: 1 kHz
FM: 0.05 MHz (50 kHz)
For FM band, decimal point is not required.
For AM band, lower triple zero digits can be omitted.
(See the left examples.)
6 **Press EXE.**
When the station is tuned in, the tuning indicator appears in the display.
7 **Adjust VOL(volume).**
To turn off the radio, press POWER ON/OFF.

The TRY AGAIN Indication

If you input a frequency outside the frequency range, beeps sound and "TRY" and "AGAIN" are displayed. Press DIRECT and enter the correct frequency again.

Note
After pressing a button, press the next button within 10 seconds. If you do not, the display will return to the previously received station.

If you input a wrong frequency
Press DIRECT to cancel the entry, and perform the above procedure from step 4 with the correct frequency.

When the sound is distorted
Normally set SENS to DX. However, when the sound is distorted, set it to LOCAL.

On AM TONE selector
Set AM TONE to NEWS. Vocal will be heard more clearly. When you are listening to music, set it to MUSIC. This function does not work in FM band.

On FM MODE selector (only for listening through stereo headphones)
For FM reception, normally set FM MODE to ST (stereo). When it is hard to hear the broadcast due to noise, set to MONO (monaural). The reception will be more state and noise will be reduced. In this mode, there is no stereo effect.

To Prevent Accidental Change of the Received Station

Press KEY PROTECT 🔑. The 🔑 mark appears in the display window and all the buttons on the control panel do not work.
To release the key protect function, press KEY PROTECT 🔑 again.

Manual Tuning

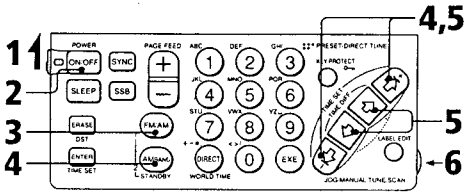

1 **Set MAIN POWER ON/OFF to ON.**
2 **Press POWER ON/OFF.** The radio is turned on.
3 **Press FM/AM** to select the band (FM or AM).
4 If you select the FM band, skip this step.
While pressing the AM BAND, press the outer buttons of JOG/MANUAL TUNE/SCAN repeatedly to select the desired band or meter band.

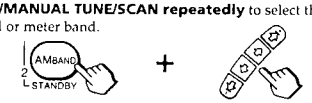

The minimum frequency in that band or meter band is received.
5 **Press an outer or inner button of JOG/MANUAL TUNE/SCAN** to search for a desired station. Pressing the outer or inner buttons changes the frequency in the following frequency step.

Band	Outer buttons	Inner buttons
FM	50 kHz	50 kHz
SW	5 kHz	1 kHz
MW	9/10 kHz	1 kHz
LW	3 kHz	1 kHz
SSB (AM)	1 kHz	0.1 kHz

When the station is tuned in, the tuning indicator appears in the display.
6 **Adjust VOL(volume).**
To turn off the radio, press POWER ON/OFF.

What is a meter band?
SW is divided into 13 bands by the wave length (meter).
Each band is called a meter band. (See the table on page 61.)

Frequency band does not change
If you keep pressing JOG/MANUAL TUNE/SCAN, the frequency will repeat in the following ranges.

Band	Inner buttons	Outer buttons *1
FM	76 ⟷ 108 MHz *2	76 ⟷ 108 MHz *2
AM	150 ⟷ 29999 kHz *3	in each broadcast band or meter band

*1 Scan tuning mode
*2 87.5 ⟷ 108 MHz for the Saudi Arabia model
*3 150 ⟷ 26100 kHz for the Saudi Arabia model

To Receive the SSB (Single Side Band) (not available for the Saudi Arabia model)
Press SSB repeatedly while the radio is on.
Every press changes the display as follows.
(normal) → USB → LSB/CW

What is SSB?
SSB is very popular among ham and business radio users and will be found on all of the amateur bands because of its signal intelligibility.
In general, SSB transmissions employ USB modulation, and for amateur bands lower than 10 MHz, LSB is often used.

What is CW (Continuous Wave)?
CW is also popular among ham and business radio. In CW transmission, the amplitude of a carrier is not modulated while that of other system is modulated. CW conveys information by interrupting a carrier using Morse code. It can be heard as a beat sound only with the unit equipped with the BFO circuits. To understand the information transmitted by CW, you need to learn the Morse code.

To Receive the SYNC (Synchronous Detection)
Press SYNC repeatedly while the radio is on.
Every press changes the display as follows.
(normal) → SYNC U → SYNC L

When the synchronous detection is locked, "LOCK" indication appears in the display.

What is synchronous detection?
There are two big problems in AM reception: distortion due to fading and interference from adjacent stations. The synchronous detection is effective in solving these problems. Distortion due to fading is caused by over-modulation, which occurs when a carrier component of the received signal is attenuated on the way. In this receiver, a pure carrier frequency with no level variation, perfectly synchronized with the original carrier, is generated in the synchronous detector circuit and is mixed with the received signal to compensate the attenuated carrier component. In this way, distortion is remarkably reduced. On the other hand, AM (SW, MW, and LW) broadcasting generally uses double-sideband transmission, in which modulated signals are transmitted using both the upper and lower sidebands (USB and LSB). In most cases, one of the sidebands is affected by interference from adjacent stations (beats). In the synchronous detector circuit, one of USB and LSB can be received. This allows clear reception without interference from adjacent stations.

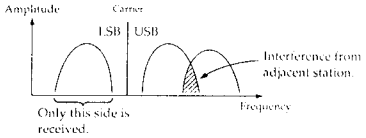

Time Difference Between Local Time and UTC (Universal Time Coordinated)

The table shows the difference between the local time and the UTC time in each area. The differences marked with a plus sign (+) indicate the number of hours ahead of the UTC. The differences marked with a minus sign (–) indicate the number of hours behind the UTC.
To see the time difference during the period for daylight saving time (summer time) if necessary, add one hour to the difference indicated in the table.

Time difference	Label* preset	City or area	Other cities in the area	MW auto scan step
± 0	LONDON	London	Lisbon	9 kHz
+ 1	C.EURO	Center Europe	Amsterdam, Berlin, Brussels, Madrid, Paris, Rome, Stockholm, Vienne, Zurich	
+ 2	CAIRO	Cairo	Athens, Istanbul	
+ 3	JEDDAH	Jeddah	Nairobi, Riyadh, Moscow	
+ 4	DUBAI	Dubai		
+ 5	KARACH	Karachi		
+ 6	DHAKA	Dhaka(Dacca)		
+ 7	BNGKOK	Bangkok	Jakarta	
+ 8	S.PORE	Singapore	Beijing, Hongkong	
+ 9	TOKYO	Tokyo	Seoul	
+ 10	SYDNEY	Sydney	Guam	
+ 11	SOLMON	Solomon	Noumea	
+ 12	AUKLND	Auckland	Fiji	
– 11	SAMOA	Samoa		
– 10	HAWAII	Hawaii	Honolulu, Tahiti	10 kHz
– 9	ANCHRG	Anchorage		
– 8	L.A.	Los Angeles	San Francisco, Vancouver	
– 7	DENVER	Denver	Calgary	
– 6	CHICAG	Chicago	Dallas, Mexico	
– 5	N.Y.	New York	Lima, Panama, Toronto	
– 4	CARACS	Caracas	Santiago	
– 3	RIO	Rio de Janeiro	Buenos Aires, San Paulo	
– 2	FN.ISL	Fernando Island		9 kHz
– 1	AZORES	Azores Island		

* Max. 6 characters

If desired city name is not preset
Select with the time difference between the time in desired place and the UTC. You can also edit one of the labels of time difference that indicates a city name. (See page 64.)

About the MW Channel Step

The MW channel step is the basic interval of the frequency allocation system, and differs from country to country.
The auto scan step is automatically changed in correspondence with the UTC time difference which is set as your local time. See the above table.

Finding Out the Current Time in Some Place in the World

When the radio is off, you can find out the time in some other place in the world.

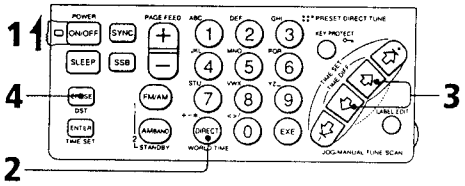

1 **Set the MAIN POWER ON/OFF to ON.**
2 When the LOCAL time indication is displayed, **Press WORLD TIME to display the world time indication.**
3 **Press the inner buttons of JOG/MANUAL TUNE/SCAN** until the desired city name or the time difference between desired place and the UTC appears.
4 When daylight saving time (summer time) is not used in the desired place or ☼ is already displayed, skip this step.
Press DST if the desired place is now under daylight saving time. ☼ appears in the display.

Tuning in by Selecting a Preset Station Name

Once the frequencies of the stations are preset, you can tune in the station easily just by selecting the memory page and pressing the desired preset button.
Up to 50 stations of either FM or AM, 5 stations for every 10 pages, can be preset. Some stations are already preset in this unit at the factory.
Let's try to receive some of the preset stations.
To preset the stations, go on to the next section to learn how to tune in a station by direct, manual or scan tuning and read the "Presetting a Station (page 62)" and "Editing Labels (page 64)".

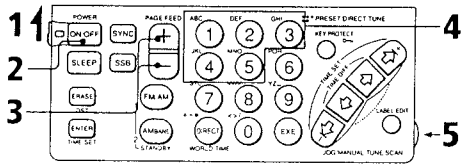

1 **Set MAIN POWER ON/OFF to ON.**
2 **Press POWER ON/OFF.**
3 **Select the desired memory page by pressing PAGE FEED +/–.** When you select memory page 1, beeps sound.
4 **Press the desired PRESET/DIRECT TUNE button 1 to 5.**
The station preset on that button will be tuned in.
5 **Adjust VOL(volume).**
To turn off the radio, press POWER ON/OFF.

Ex. When selecting AM 5975 kHz on button 1 of page 0

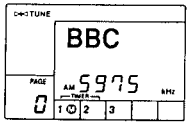

The illustration does not necessarily show the preset memory or station.

To check your presetting
Tune in a desired preset station. The preset label and frequency of the preset station is displayed.
You can also edit the preset label of the preset stations. (See page 64.)

To Improve Reception

For MW/LW recepion
Retract the telescopic antenna.
The built-in ferrite bar antenna activates. Since this antenna is directional, rotate the unit horizontally for optimum direction.

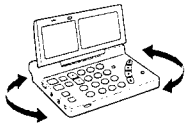

For SW reception
Pull out the telescopic antenna to its full length and set it vertically.

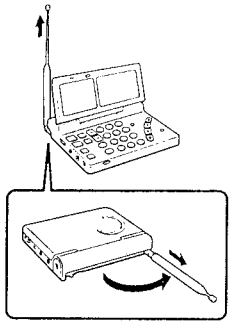

For FM reception
pull out the telescopic antenna to expose its swivel base and adjust its length, angle and direction.

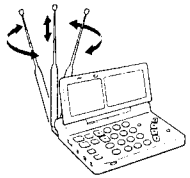

www.manualscenter.com

Scan Tuning

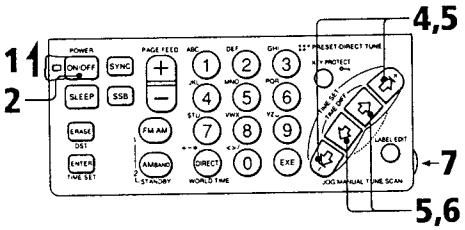

1 **Set MAIN POWER ON/OFF to ON.**
2 **Press POWER ON/OFF.**
3 **Receive a broadcast band** by way of direct tuning or manual tuning. (Refer to the table on page 61 for the frequency range of each broadcast band.)
4 **Keep pressing one of outer buttons of JOG/MANUAL TUNE/SCAN for about 2 seconds.** "SCAN" will appear in the label display and scan tuning will begin within the frequency range of the table on page 61. When a station is received, the scanning will stop automatically for about 2 seconds and the tuning indicator appears in the display.
5 **Press one of JOG/MANUAL TUNE/SCAN again** to listen to the station being received. The scan tuning stops and the station being received is tuned in.
6 **Tune in the station more precisely by inner buttons of JOG/MANUAL TUNE/SCAN.**
7 **Adjust VOL(volume).**
To turn off the radio, press POWER ON/OFF.

The Frequency Range of the Auto Scan for Each Broadcast Band

Broadcast band		Frequency range	SW meter band
AM	LW	150 kHz – 529 kHz *1	—
	MW	530 kHz – 1620 kHz (10 kHz step)*2	—
		531 kHz – 1620 kHz (9 kHz step)*2	—
	SW	2250 kHz – 2550 kHz	120 meter band
		3150 kHz – 3450 kHz	90 meter band
		3850 kHz – 4050 kHz	75 meter band
		4700 kHz – 5100 kHz	60 meter band
		5900 kHz – 6250 kHz	49 meter band
		7100 kHz – 7400 kHz	41 meter band
		9400 kHz – 10000 kHz	31 meter band
		11500 kHz – 12150 kHz	25 meter band
		13500 kHz – 13900 kHz	22 meter band
		15000 kHz – 15700 kHz	19 meter band
		17450 kHz – 18000 kHz	16 meter band
		21400 kHz – 21950 kHz	13 meter band
		25600 kHz – 26100 kHz	11 meter band
FM		76.00 MHz – 108.00 MHz *3	—

*1 150 – 285 kHz for the Saudi Arabia model
*2 The frequency range is different according to the channel step which is linked to the Local Time.
*3 87.50 – 108.00 MHz for the Saudi Arabia model

The frequency allocation (channel step)
LW: 3 kHz
MW: 9 kHz/10 kHz
SW: 5 kHz
FM: 50 kHz

When scan tuning stops too often
Set SENS to LOCAL.

Frequency band does not change
If you do not stop scanning, the scanning will repeat in the range of the broadcast band or meter band (see the above table).

Presetting a Station

Once the frequencies of the stations are preset, you can tune in the station easily just by selecting the memory page and pressing the desired preset button (page 54).
Some stations are already preset in this unit at the factory.

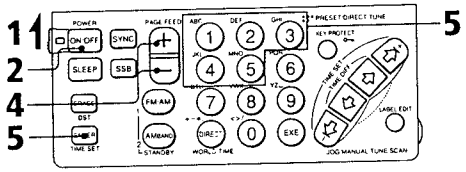

Ex. To preset FM 95.75 MHz on button 1 of page 3

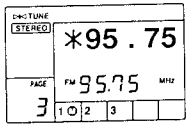

1 **Set MAIN POWER ON/OFF to ON.**
2 **Press POWER ON/OFF.**
3 **Tune in a desired station** by way of direct tuning (see page 56), manual tuning (see page 58) or scan tuning (see page 60).
4 **Press PAGE FEED +/– to display a desired memory page from 0 to 9.** When you select memory page 1, beeps sound.
5 **While keeping ENTER pressed, press one of the PRESET/DIRECT TUNE buttons 1 to 5.**
The desired station is preset on that button. The preset number and ⓜ mark appears in the display and the frequency with an asterisk "*" is displayed as the label.

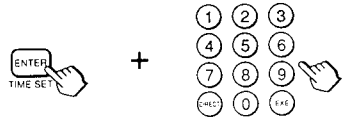

The number of stations you can preset
Up to 50 stations of either FM or AM, 5 stations for every 10 pages, can be preset to PRESET/DIRECT TUNE button 1 to 5.

To check your presetting
Tune in a desired preset station (see page 54). The preset label and frequency of the preset station is displayed.
You can also edit the preset label of the preset stations. (See page 64.)

To change the preset station
Preset a station to the desired PRESET/DIRECT TUNE button 1 to 5 of the desired memory page. The station previously preset to the button is erased.

To erase the preset station
1 Select the desired memory page by pressing PAGE FEED +/–.
2 While pressing ERASE, press the desired PRESET/DIRECT TUNE button 1 to 5 which you want to erase. The preset number and ⓜ mark in the preset memory display are disappear and the station preset to that button is erased. The label displayed is retained until you change the frequency received.

Editing Labels

You can edit the label (up to 6 characters) of the preset stations or one of the time difference.

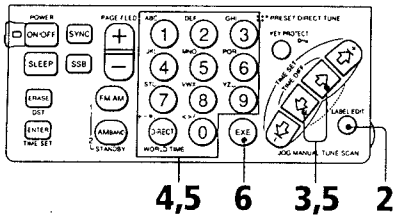

1 Display the label you want to edit by way of the preset tuning (see page 54) or the worldtime clock (see page 53).
2 Press LABEL EDIT. The first character of the label flashes.
3 Press the inner buttons of JOG/MANUAL TUNE/SCAN to move the cursor to the character which you want to edit.
4 Press the desired PRESET/DIRECT TUNE button to enter the character. The characters upper-left of each PRESET/DIRECT TUNE button shows the character which is entered by pressing the button. Every press of the button changes the character as follows.
Ex. Pressing the PRESET/DIRECT TUNE 1

A → B → C → 1

1 A B C 1	2 D E F 2	3 G H I 3
4 J K L 4	5 M N O 5	6 P Q R 6
7 S T U 7	8 V W X 8	9 Y Z _ * 9
DRCT + − * .	0 < > / 0	—

*_ indicates space character.

5 Fix all characters of the label which you want to edit.
During editing characters, you should press a button within 15 seconds after pressing the precedent button.
6 Press EXE. Beep sounds and the displayed characters are preset as the label.

When the flashing of the character stops
This occurs when you have not pressed any button within 15 seconds during editing characters. Press LABEL EDIT again.

To interrupt the editing
Press LABEL EDIT.

To preset a station with the label
When a ⊙ mark is displayed in the preset memory display, you can preset a label by simply editing it.
You can also preset a label together with the frequency when presetting a station, perform the following procedure.
1 Tune in a station by way of direct tuning (see page 56), manual tuning (see page 58) or scan tuning (see page 60).
2 Edit the label by the above steps from 2 to 6.
3 Preset the station by the steps 4 and 5 in the "Presetting a Station (page 62)". The label displayed will be stored in memory together with the frequency.

When you edit a label of time difference
If you have already changed the label of another time difference, it is canceled and returned to the original label.

Using The Standby Function

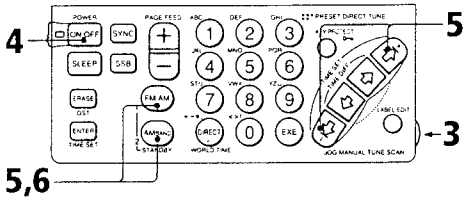

1 Preset the station which you want to listen to at the desired time to the PRESET/DIRECT TUNE 1 or 2 of page 0.
The station preset to preset 1 is for standby 1 and preset 2 for standby 2.

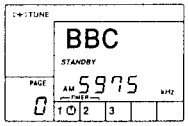

2 Tune in the desired preset station which is preset in the step 1.
3 Adjust VOL(volume).
4 Press POWER ON/OFF.
The radio will be turned off.

5 Set the time by pressing outer buttons of JOG/MANUAL TUNE/SCAN while keeping STANDBY 1 or STANDBY 2 pressed. The STANDBY indicator and "SET" flash in the display while pressing STANDBY 1 or STANDBY 2.

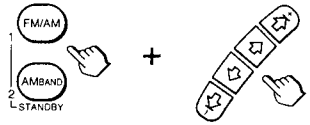

EX. Setting 7:15 to STANDBY 1

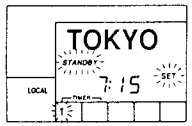

When the world time is displayed, the time display automatically changes to the local time.
If you keep a JOG/MANUAL TUNE/SCAN pressed, the time will change continuously.
6 Stop pressing STANDBY 1 or STANDBY 2. The current time appears in the display, and the STANDBY indicator will continue to be displayed.

When you set the standby time
Be sure to turn the radio off. You cannot set the sandby time while you are listening to the radio.

To cancel the standby mode
Either press STANDBY 1 or STANDBY 2 so that the STANDBY indication disappears or set MAIN POWER ON/OFF to OFF.

When you are listening to the radio at the preset time
The frequency will change to that preset to the appropriate preset button.

When the radio is turned on at the standby time
The radio will be turned off automatically after about 60 minutes.

When no frequency is preset to the appropriate preset button
When the preset time has come, beeps sound within about 30 minutes. To stop the beep, press any key.

Once you preset the standby time
The radio is turned on at the same time everyday.

You can set both the standby 1 and 2 at a time
When the standby time comes during the other standby works, the next standby will work with the appropriate frequency.

If you set standby 1 and 2 to a same desired time
Only the standby 1 will work.

When you use the standby function abroad
Since the standby time is linked to the Local Time, set the place you stay as the local area before presetting the standby time.

To check the preset standby time
Press STANDBY 1 or 2. When you have already set the standby 1 or 2, press STANDBY 1 or 2 again to display the preset standby time.

To change the preset standby time
Set the desired standby time, and the time previously set is erased.

www.manualscenter.com

Recording Radio Programs

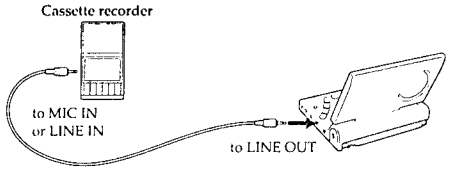

Cassette recorder		Connecting cable
Type	Jack	
Monaural	MIC IN (minijack)	RK-G135
Stereo	MIC IN (minijack)	RK-G134
	LINE IN (minijack)	RK-G136
	LINE IN (pinjack)	RK-G129

Tune in a desired radio program and set the cassette recorder to the record mode.

Note
The VOL (volume) control setting on the radio has no effect on the recording.

Stereo recording
When you record with a stereo recorder, FM stereo programs are recorded in stereo and AM programs are recorded monaurally to both channels.

Using the Sleep Timer

Before using the sleep timer, set the clock (see page 50).

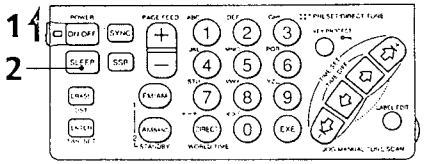

1 **Set MAIN POWER ON/OFF to ON.**
2 **Press SLEEP.**
The radio is turned on. The "SLEEP" indication appears in the display.
3 **Tune in the desired station and adjust the volume.**
The radio will be turned off automatically after about 60 minutes.

To turn off the radio before the sleep time
Press POWER ON/OFF.

When you press SLEEP while listening to the radio
The radio will be turned off automatically after about 60 minutes.

To prolong the listening time
Press SLEEP again. The radio will be turned off about 60 minutes later.

If you press SLEEP after the radio is turned off
The sleep timer activates and the last station to be tuned in will be received.

For Better SW/MW/LW Reception

Using the Active Antenna AN-100 (supplied for ICF-SW100S)

When using the active antenna, collapse the telescopic antenna.

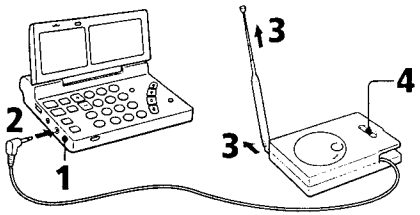

1 **Set SENS of the radio to DX.**
2 **Pull out the output cable from the active antenna and plug it into the ACTIVE ANT jack.**
3 **Extend the telescopic antenna of the active antenna.**
4 **Set AM BPF FREQ to WIDE.** When the sound is distorted, set it to a suitable frequency range.
5 **Turn on the radio and tune in the desired station.**

It is also possible to set the antenna module on the floor.

Note
Connect only the antenna recommended in this manual to the ACTIVE ANT jack. Do not connect any other type, since power (DC 3V) is supplied to this jack for the specific antennas.

After use
1 Collapse the telescopic antenna.
2 Reel up the output cable.

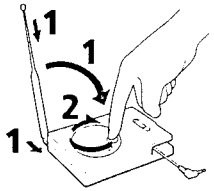

Using the SW Compact Antenna AN-71 (supplied only for the Saudi Arabia model ICF-SW100E)

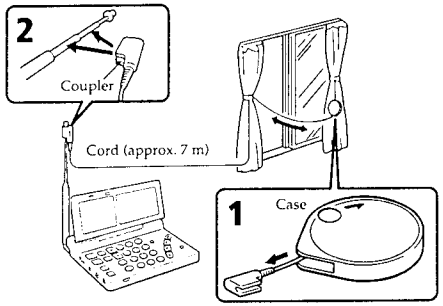

1 **Fully pull out the cord from the case.**
2 **Attach the coupler to the telescopic antenna.**
3 When the window can be opened: **Extend the cord and the case out through the window,** after making sure there is no danger.
When the window cannot be opened: **Fully extend the cord along the frame of the window.**

After use

Notes
- When receiving MW or LW broadcasts without the active antenna, be sure to disconnect a SW external antenna. Otherwise, you cannot receive them as the built-in ferrite bar antenna does not function.
- If there is lightning, do not touch the wire of an external antenna and disconnect its AC power adaptor (if connected) immediately. Never touch the antenna wire during a lightning storm.
- When using an external antenna, retract the telescopic antenna.
- Locate the outdoor antenna as far away from the street as possible.
- For details about the external antenna, refer to its instruction manual.

Using the Wide Range Antenna (not supplied)

Use the wide range antenna AN-1 or AN-102 (not supplied).
There are following two methods.

Method A (For SW reception)
With a connecting cord, connect the OUTPUT jack of the antenna controller (supplied with the AN-1 or AN-102) and the ACTIVE ANT jack of the ICF-SW100.

Method B (For MW/LW reception only)
1 With the connecting cord, connect the OUTPUT jack of the antenna controller and the INPUT jack of the antenna coupler (supplied with the AN-1 or AN-102).
2 Put the antenna coupler near the ICF-SW100.

Example: When the AN-1 is used.

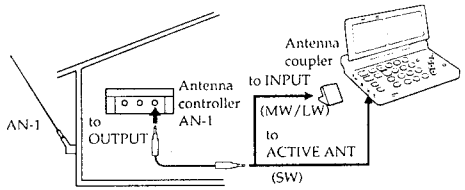

SECTION 2
DISASSEMBLY

NOTE: Follow the disassembly procedure in the numerical order given.

2-1. CABINET (REAR) (LID)

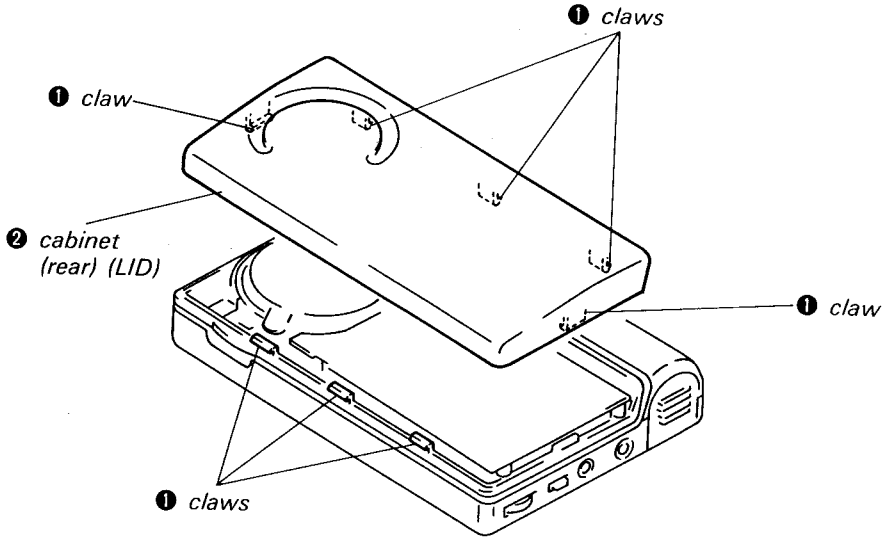

2-2. CHASSIS

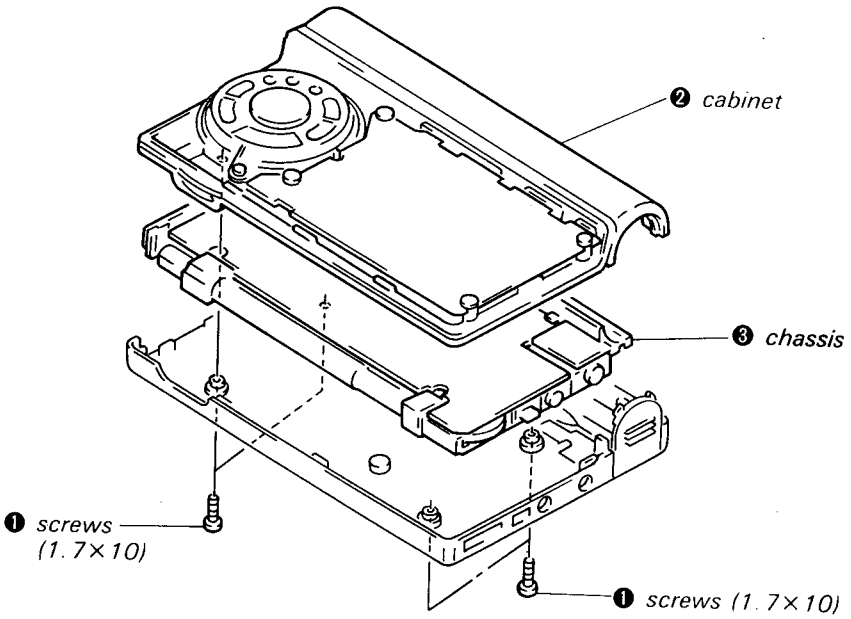

www.manualscenter.com

SECTION 3
ELECTRICAL ADJUSTMENTS

- **Parts location diagram relevant to the adjustment**

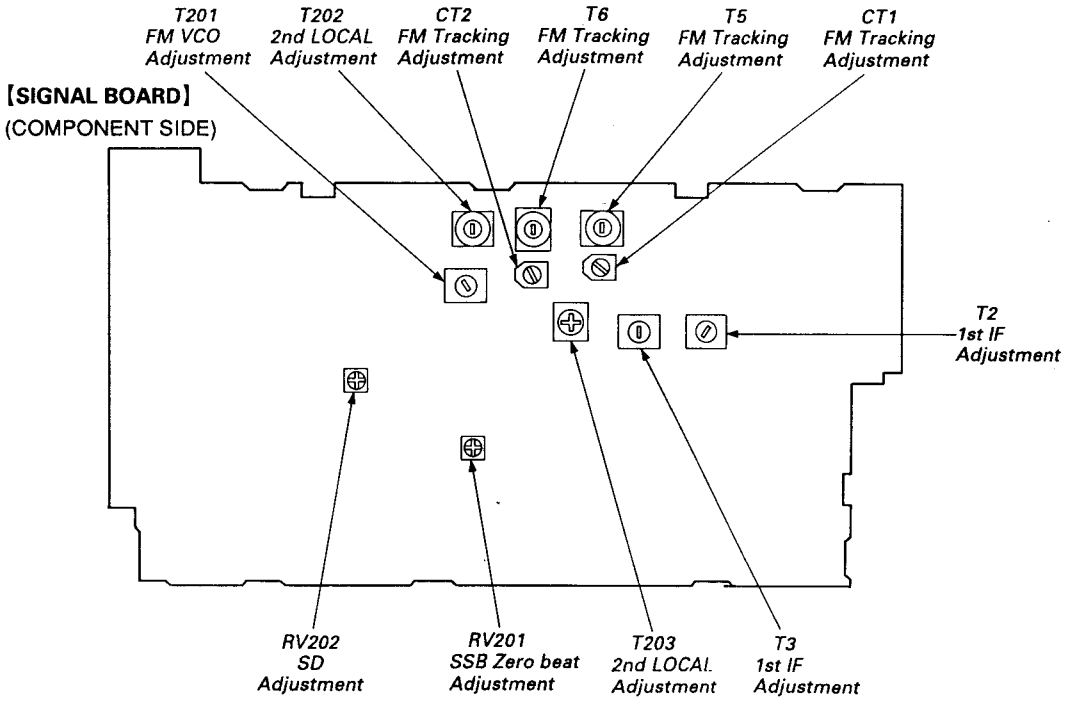

- **AM SECTION**

2nd LOCAL ADJUSTMENT

Setup:

VOLUME control: as required

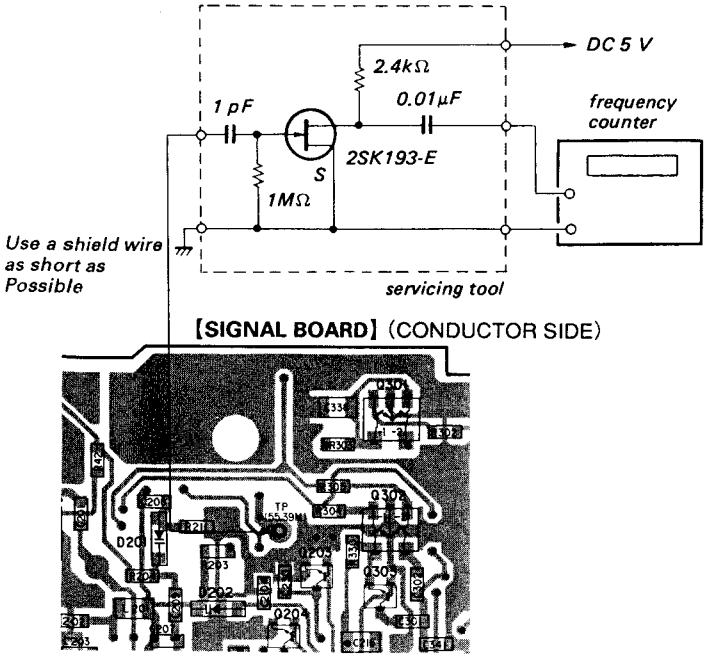

Procedure:

1. Tune the set to AM 150 kHz.
2. Press the [SSB] key, and confirm that [USB] is displayed.
3. Press the [⇩] key (outside).
4. Adjust T202 (Pink) to obtain a 55.38997 – 55.39003 MHz on the frequency counter.
5. Press the [⇩] key (inside) only once. (Return to 2 if wrong)
6. Adjust T203 (Yellow) to obtain a 55.38907 – 55.38913 MHz on the frequency counter.

1st IF ADJUSTMENT

Setup:

VOLUME control: as required

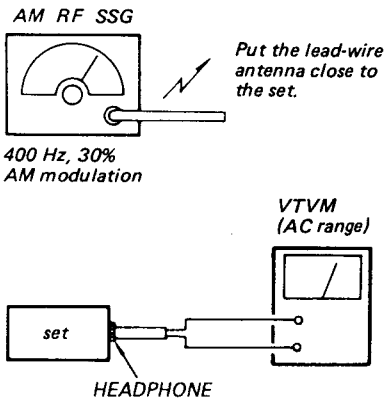

Procedure:

1. Set the frequencies of the AM RF SSG and the frequency display of the set to 150 kHz.
2. Adjust T2 and T3 to obtain a maximum reading on the VTVM.

• FM SECTION

FM FREQUENCY COVERAGE (VCO VOLTAGE) ADJUSTMENT

Setup:

VOLUME control: as required

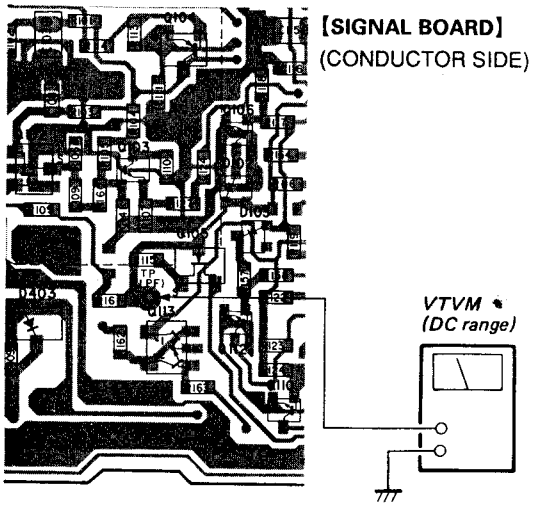

Procedure:

1. Tune the set to 76 MHz.
2. Adjust T201 to obtain a 1.75 – 1.85 V on the VTVM.
3. Tune the set to 108 MHz.
4. Make sure that the VTVM reading is below 11V.

FM STEREO ADJUSTMENT

Setup:

VOLUME control: as reguired

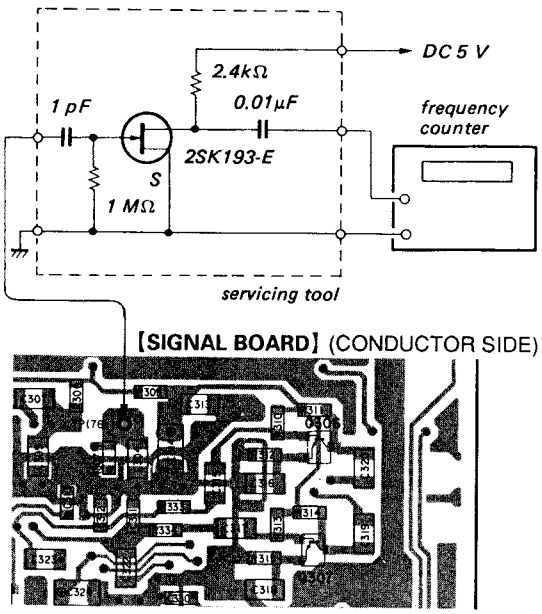

Procedure:

1. Adjust RV301 to obtain a 75.7 – 76.3 kHz on the frequency counter.

FM TRACKING ADJUSTMENT

NOTE: This adjustment should be performed after the remove Rod-Antenna (ANT1).
This adjustment should be performed after the FM FREQUENCY-COVERAGE ADJUSTMENT.

Setup:

VOLUME control: as required

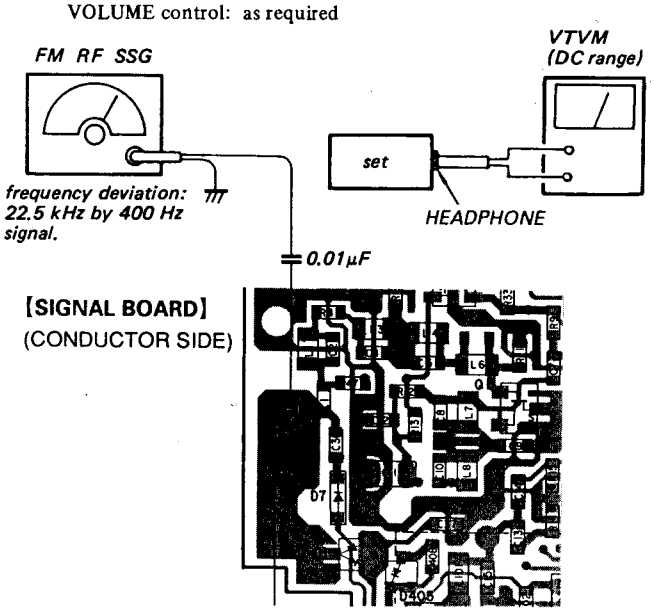

Procedure:

1. Set the frequencies of the FM RF SSG and the frequency display of the set to 76 MHz.
2. Adjust T5 and T6 to obtain a maximum reading on the VTVM.
3. Set the frequencies of the FM RF SSG and the frequency display of the set to 108 MHz.
4. Adjust CT1 and CT2 to obtain a maximum reading on the VTVM.
5. Repeat the above steps several times, and finish the adjustment with the trimmers CT1 and CT2.

www.manualscenter.com

SD ADJUSTMENT

Setup:

VOLUME control: as required

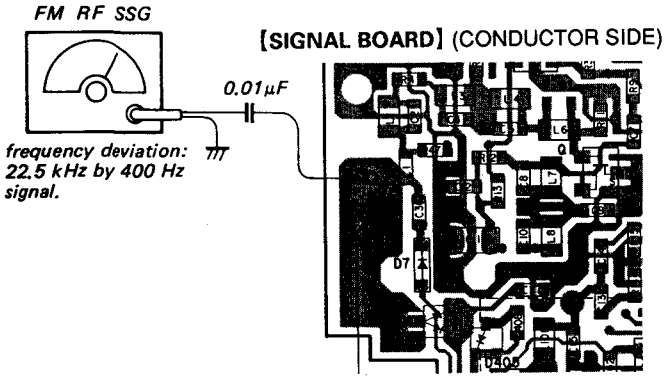

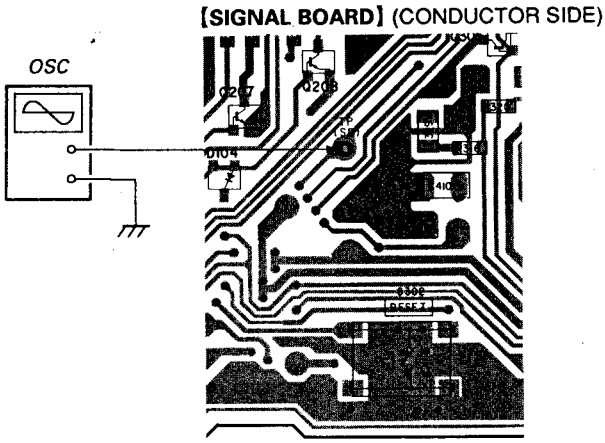

Procedure:

1. Set the frequencies of the FM RF SSG and the frequency display of the set to 93 MHz.
2. Adjust the RV202 so that a waveform on oscilloscope is as shown below.

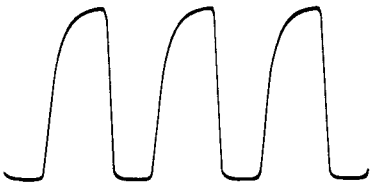

SSB ZERO BEAT ADJUSTMENT

Setup:

BAND select switch: AM
MODE: SSB (USB or LSB/CW)

Procedure:

1. Tune to the strong and stable AM station nearby.
2. Adjust the RV201 to attain zero beat (no beat sound heard).
3. Change the mode to the alternative band (LSB/CW if USB), and check if the zero beat is retained.
   If not, readjust.

SECTION 4
DIAGRAMS

4-1. IC PIN FUNCTIONS

•IC102 μPD1724GB-599-1A7 (PLL SINTHESIZER CONTROL)

Pin No.	Pin Name	I/O	Description
1 — 10	LCD10 — LCD1	O	Not used this set.
11	N. C	—	No connection.
12 — 14	COM3 — COM1	O	Not used this set.
15	VSS3	—	Not used this set.
16	CAP2	—	
17	CAP1	—	
18	VSS2	—	
19	N. C	O	Not used this set.
20	BEEP	O	Beep signal (1kHz/3kHz) output terminal.
21	N. C	—	No connection.
22	VDD	—	Power supply terminal.
23	VCOH	I	FM local oscillation input terminal.
24	VCOM	I	AM local oscillation input terminal. (PLL local oscillation frequency input at direct frequency division.)
25	VCOL	I	Not used this set.
26	VSS1	—	Ground terminal.
27	EO1	O	Not used this set.
28	EO2	O	PLL error output terminal.
29	CE	I	Chip enable input terminal. (Device select signal input. "H" : Normal operation.)
30	XO	O	75kHz clock oscillation output terminal.
31	XI	I	75kHz clock oscillation input terminal.
32	VSS4	—	Not used this set.
33	BAR/$\overline{\text{ROD}}$	O	BAR/ROD select. "H" : BAR "L" : ROD
34	AM/$\overline{\text{FM}}$	O	AM/FM select. "H" : AM "L" : FM
35	W/$\overline{\text{N}}$	O	Not used this set.
36	IF POWER	O	Power supply control terminal.
37	D/A	O	A/D conversion to get the voltage for the 2nd local shift.
38			
39			
40			
41	SSB/$\overline{\text{SYNC}}$	O	SSB/SYNC select. "H" : SSB "L" : SYNC
42	ENV/$\overline{\text{PSN}}$	O	ENV/PSN select. "H" : ENV "L" : PSN
43	USB/$\overline{\text{LSB}}$	O	USB/LSB select. "H" : USB "L" : LSB
44	READY	O	Ready signal output to SUB system control (IC604).
45	DATA	I	Data signal input from SUB system control (IC604).
46	CLK	I	Clock signal input from SUB system control (IC604).
47	REQ	I	Request signal input from SUB system control (IC604).
48	UNLOCK	I	PLL UNLOCK detection.
49, 50	N. C	—	No connection.
51 — 56	S16 — S11	O	Not used this set.

www.manualscenter.com

•IC603 MSM64164C-029 (MAIN SYSTEM CONTROL)

Pin No.	Pin Name	I/O	Description
1 — 15	MS20 — MS6	O	Segment signal output to LCD (LCD601).
16	VDET2	I	Battery voltage detection input terminal.
17	VDET1	I	Battery voltage detection input terminal.
18	MAIN POWER	I	Tuner power control signal input from S701 (MAIN POWER switch).
19	SCK IN	I	Clock signal input from SUB system control (IC604).
20	INT	I	Interrupt signal input from SUB system control (IC604).
21 — 24	KR4 — KR1	I	Key Return terminal.
25 — 27	KS7 — KS5	O	Key Source terminal.
28	BD	—	Not used this set.
29	VEE	—	Minus power supply terminal for inner logic.
30	VDD	—	Power supply terminal.
31 — 39	N. C	—	Not used this set.
40	VSS1	—	LCD driving bias output terminal.
41	VSS	—	Ground terminal.
42	VSS2	—	LCD driving bias output terminal.
43	VSS3	—	LCD driving bias output terminal.
44	C1	—	Capacitor connection terminal for LCD driving bias generator.
45	C2	—	Capacitor connection terminal for LCD driving bias generator.
46 — 49	MC1 — MC4	O	Common signal output to LCD (LCD601).
50 — 54	MS1 — MS5	O	Segment signal output to LCD (LCD601).
55 — 58	KS4 — KS1	O	Key source terminal.
59	DO	O	Data signal output to EEP ROM (IC606).
60	SK	O	Clock signal output to EEP ROM (IC606).
61	CS	O	Chip select signal output to EEP ROM (IC606).
62	N. C	—	Not used this set.
63	OSC2	O	High speed clock oscillation terminal.
64	OSC1	I	High speed clock oscillation terminal.
65	VDD	—	Not used this set.
66	XTO	O	32,768kHz clock oscillation output terminal.
67	XTI	I	32,768kHz clock oscillation input terminal.
68	RST	I	System reset input terminal.
69, 70	N. C	—	Not used this set.
71	MUTE	O	Mute signal output terminal.
72	SOUT	O	Data signal output to SUB system control (IC604).
73	START	O	Start signal output to SUB system control (IC604).
74	SCK OUT	O	Clock signal output to SUB system control (IC604).
75, 76	KR5, KR6	I	Key Return terminal.
77	SIN	I	Data signal input from SUB system control (IC604).
78	EDI	I	Data signal input from EEP ROM (IC606).
79, 80	MS22, MS21	O	Segment signal output to LCD (LCD601).

•IC604 MSM64164C-030 (SUB SYSTEM CONTROL)

Pin No.	Pin Name	I/O	Description
1 — 15	SS28 — SS14	O	Segment signal output to LCD (LCD601).
16	SD	I	SD signal input from IC201. (Active "L")
17	TUNE	I	TUNE signal input from IC201. (Active "L")
18	STEREO	I	STEREO/MONO select signal input terminal. "L" : STEREO
19	EDI	—	Not used this set.
20	EDO	—	Not used this set.
21	SCK IN	I	Clock signal input from MAIN system control (IC603).
22	POWER	O	Power control signal output to PLL synthessizer control (IC102).
23	REQ	O	Request signal output to PLL synthessizer control (IC102).
24	READY	I	Ready signal input from PLL synthessizer control (IC102).
25	DATA	O	Data signal output to PLL synthessizer control (IC102).
26	CLK	O	Clock signal output to PLL synthessizer control (IC102).
27	LIGHT	O	Not used this set.
28	N .C	—	Not used this set.
29	VEE	—	Minus power supply terminal for inner logic.
30	VDD	—	Power supply terminal.
31 — 39	N. C	—	Not used this set.
40	VSS1	—	LCD driving bias output terminal.
41	VSS	—	Ground terminal.
42	VSS2	—	LCD driving bias output terminal.
43	VSS3	—	LCD driving bias output terminal.
44	C1	—	Capacitor connection terminal for LCD driving bias generator.
45	C2	—	Capacitor connection terminal for LCD driving bias generator.
46 — 49	SC1 — SC4	O	Common signal output to LCD (LCD601).
50 — 62	SS1 — SS13	O	Segment signal output to LCD (LCD601).
63	OSC2	O	High speed clock oscillation terminal.
64	OSC1	I	High speed clock oscillation terminal.
65	VDD		Power supply terminal.
66	XTO	O	Not used this set.
67	XTI	I	32,768kHz clock oscillation input terminal.
68	RST	I	System reset input terminal.
69, 70	N. C	—	Not used this set.
71	N. C	—	No connection.
72	SOUT	O	Data signal output to MAIN system control (IC603).
73	SCK OUT	O	Clock signal output to MAIN system control (IC603).
74	START	O	Start signal output to MAIN system control (IC603).
75	N. C	—	No connection .
76	INT	I	Interrupt signal input from MAIN system control (IC603).
77	SIN	I	Data signal input from MAIN system control (IC603).
78	N. C	—	No connection.
79, 80	SS30, SS29	O	Segment signal output to LCD(LCD601).

www.manualscenter.com

4-2. BLOCK DIAGRAM

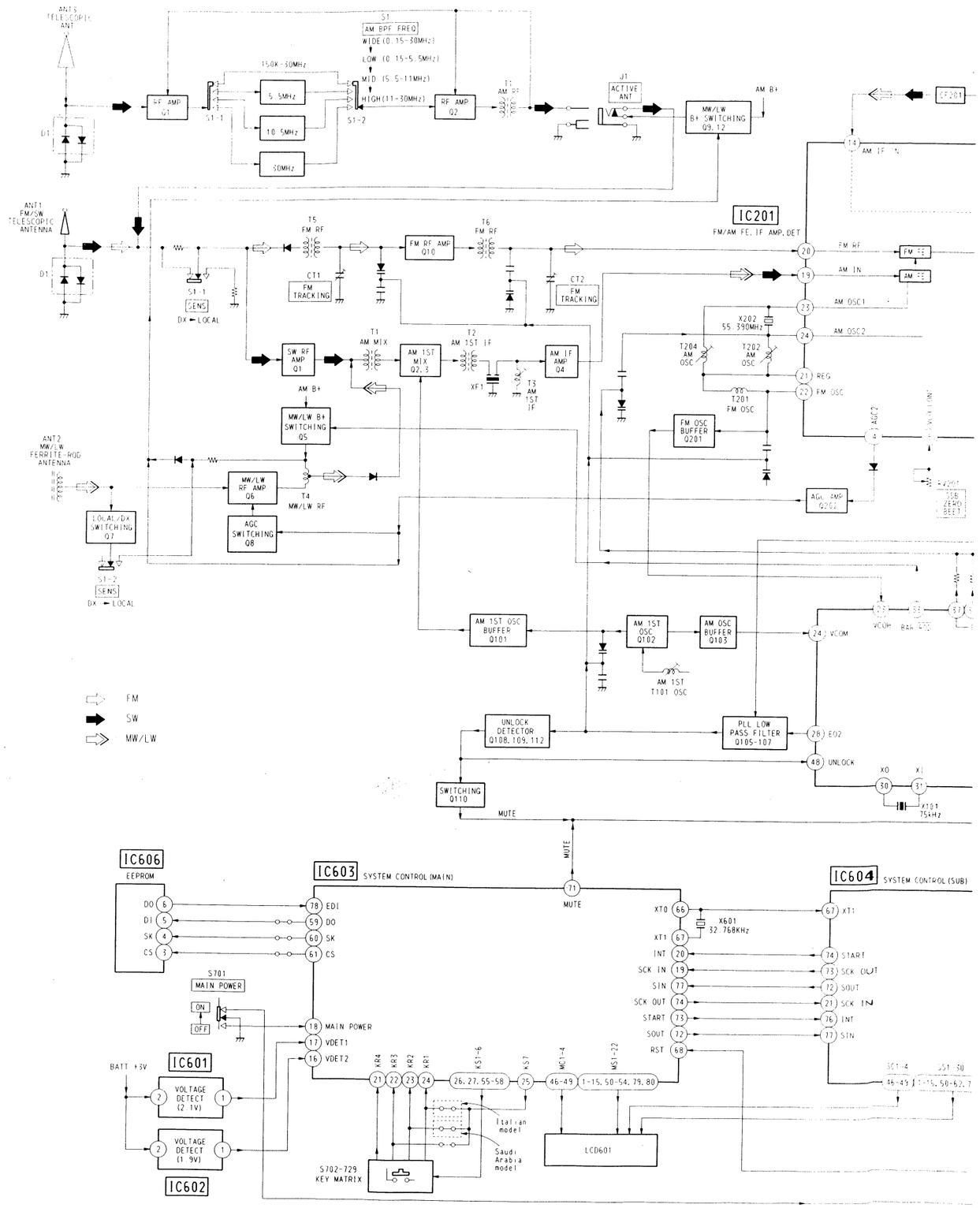

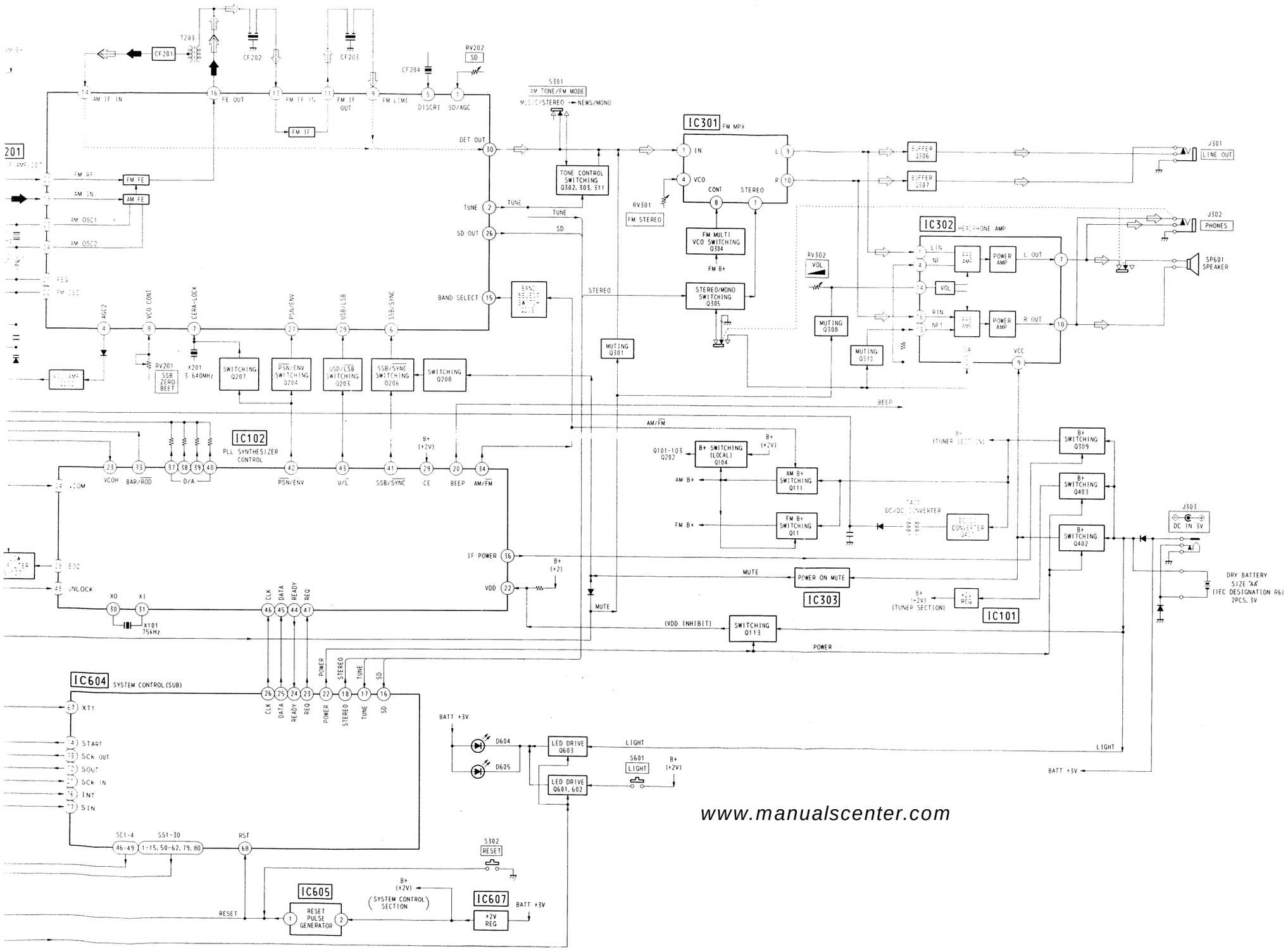

www.manualscenter.com

4-3. SEMICONDUCTOR LEAD LAYOUTS

AK93C65LF-E1
LA5002M

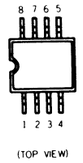

CXA1376AM

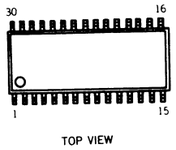

CXA1622M

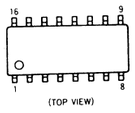

LA3335M

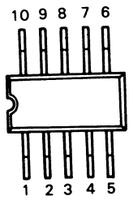

MSM64164C-029
MSM64164C-030

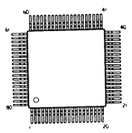

S-80717SN-DE-T1
S-80719SN-DG
S-80723SN-DL-T1

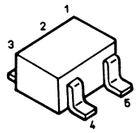

S-81220PG-PS-T1

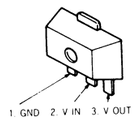

μPD1724GB-599-1A7

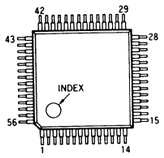

2SB1197K-Q
2SC4177-L6
2SC4178-F13
DTA144TU
DTC144TU

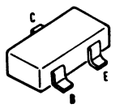

2SK209-G
2SK508-K51

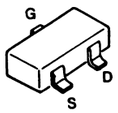

2SK210-GR
2SK238-K16
2SK238-K16A

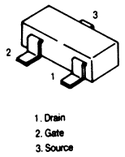

FMW1

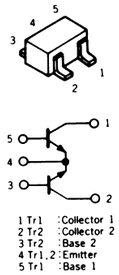

XN4608

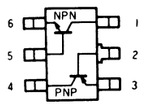

1SS226

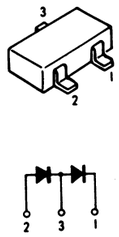

1SS318

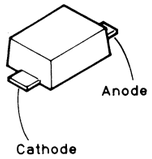

1T363

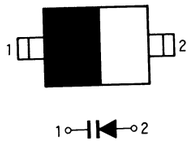

DAN202U

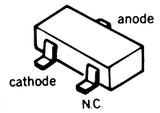

DTZ12

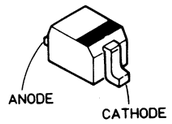

IMN10

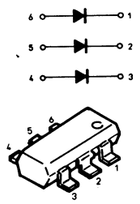

RB411D

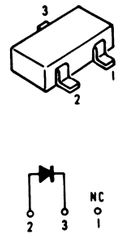

RB715F

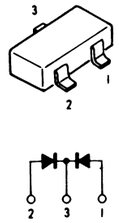

CL-181G-C

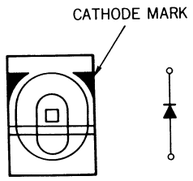

www.manualscenter.com

4-4. SCHEMATIC DIAGRAM —ACTIVE ANTENNA (AN-100) Section—

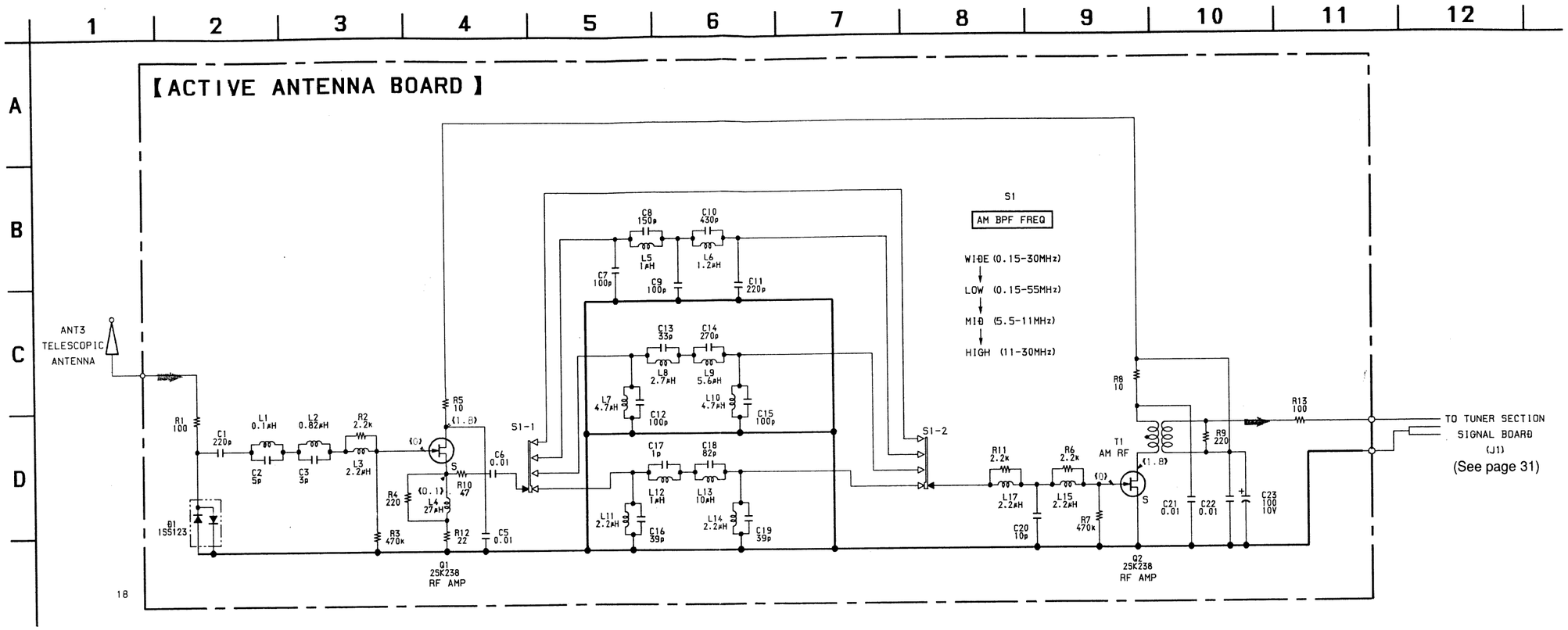

Note:

- All capacitors are in μF unless otherwise noted. pF: μμF 50WV or less are not indicated except for electrolytics and tantalums.
- All resistors are in Ω and 1/4 W or less unless otherwise specified.
- Power voltage is supplied through miniplug connected to the active antenna jack.
- Voltage and waveforms are dc with respect to ground under detuned conditions.
  《 》: SW
- Voltages are taken with a VOM (Input Impedance 10MΩ). Voltage variations may be noted due to normal production tolerances.
- Signal path.
  ➡ : SW

www.manualscenter.com

4-5. PRINTED WIRING BOARD —ACTIVE ANTENNA (AN-100) Section—

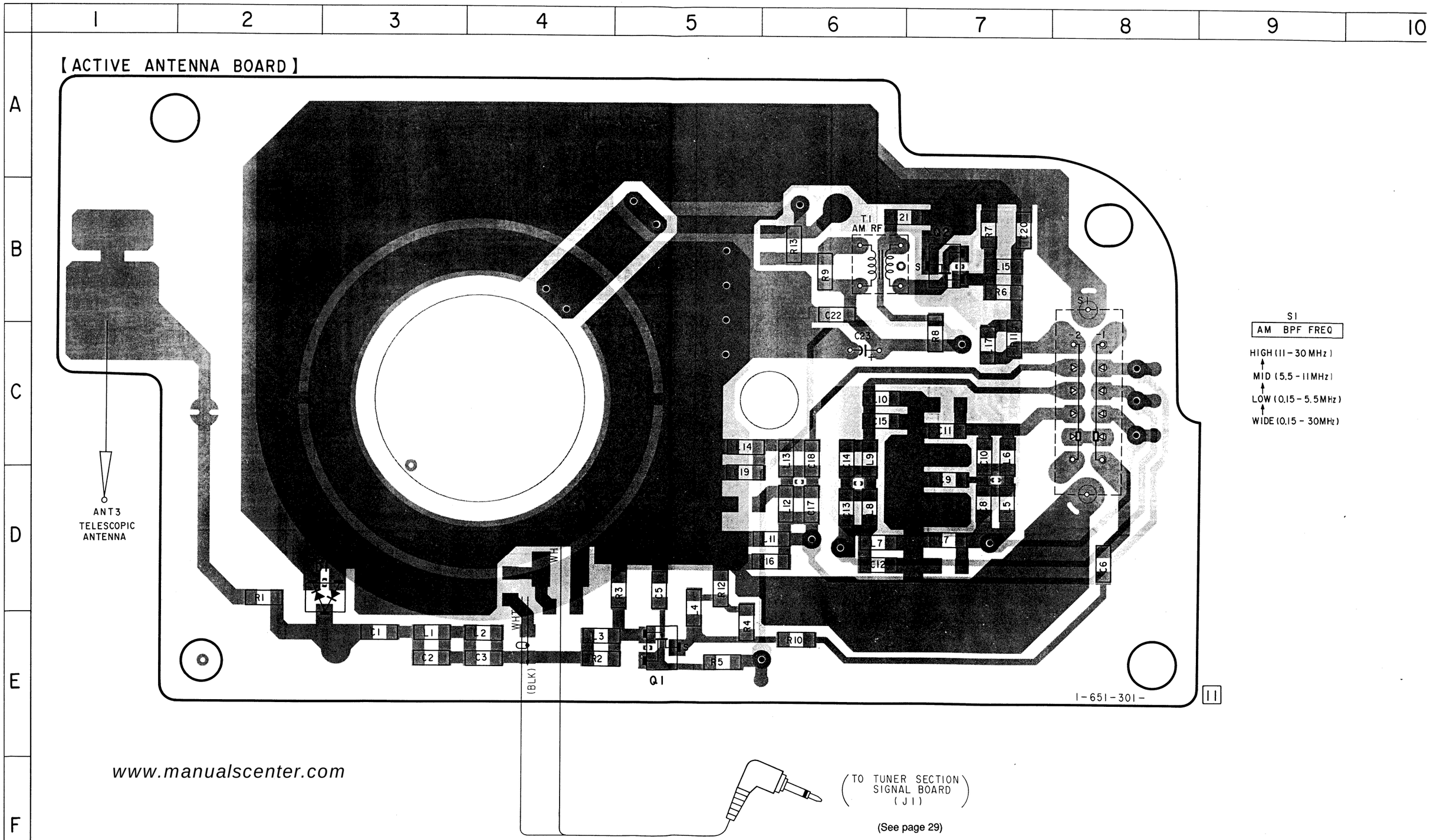

www.manualscenter.com

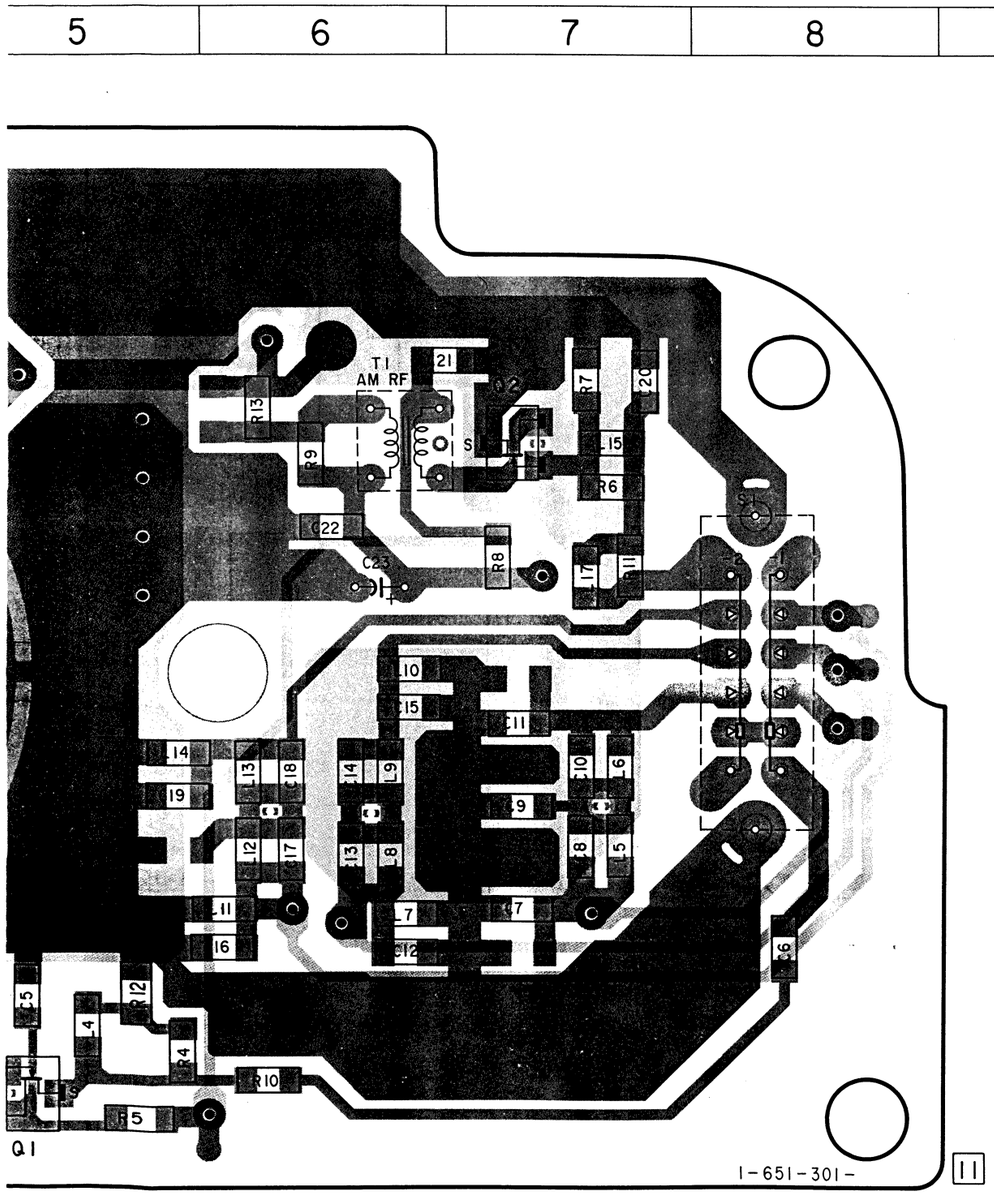

S1

AM BPF FREQ
HIGH (11-30MHz)
↑
MID (5.5-11MHz)
↑
LOW (0.15-5.5MHz)
↑
WIDE (0.15-30MHz)

• **Semiconductor Location**

Ref. No.	Location
D1	D-2
Q1	E-5
Q2	B-7

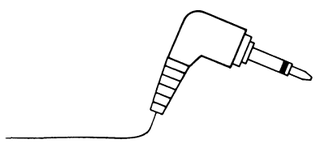

(TO TUNER SECTION SIGNAL BOARD (J1))

(See page 29)

www.manualscenter.com

Note:

- ○—— : parts extracted from the component side.
- —— : parts extracted from the conductor side.
- ● : Through hole.
- : Pattern on the side which is seen.
- : Pattern of the rear side.

4-6. PRINTED WIRING BOARD —TUNER Section—

• **Semiconductor Location**

Ref. No.	Location	Ref. No.	Location
D1	D-13	Q12	B-10
D2	C-15	Q101	D-14
D3	B-15	Q102	E-15
D4	B-11	Q103	E-15
D5	B-17	Q104	D-15
D6	B-18	Q105	E-16
D7	C-13	Q106	D-16
D101	E-14	Q107	D-16
D102	E-16	Q108	E-16
D103	E-16	Q109	F-16
D104	E-19	Q110	F-16
D201	B-19	Q111	D-10
D202	C-19	Q112	F-16
D203	D-18	Q113	F-15
D401	B-4	Q201	D-18
D402	B-3	Q202	D-17
D403	F-15	Q203	C-20
D405	D-14	Q204	C-19
		Q205	D-18
IC101	D-9	Q206	D-19
IC102	E-8	Q207	E-19
IC201	D-6	Q208	D-19
IC301	C-4	Q301	B-20
IC302	D-4	Q302	B-20
IC303	F-7	Q303	C-20
		Q304	D-20
Q1	C-14	Q305	D-20
Q2	C-15	Q306	C-22
Q3	C-15	Q307	D-22
Q4	C-16	Q308	B-23
Q5	C-15	Q309	F-10
Q6	B-15	Q310	E-22
Q7	B-16	Q311	B-23
Q8	C-16	Q401	B-4
Q9	B-2	Q402	F-4
Q10	B-17	Q403	E-10
Q11	B-17	Q404	F-4

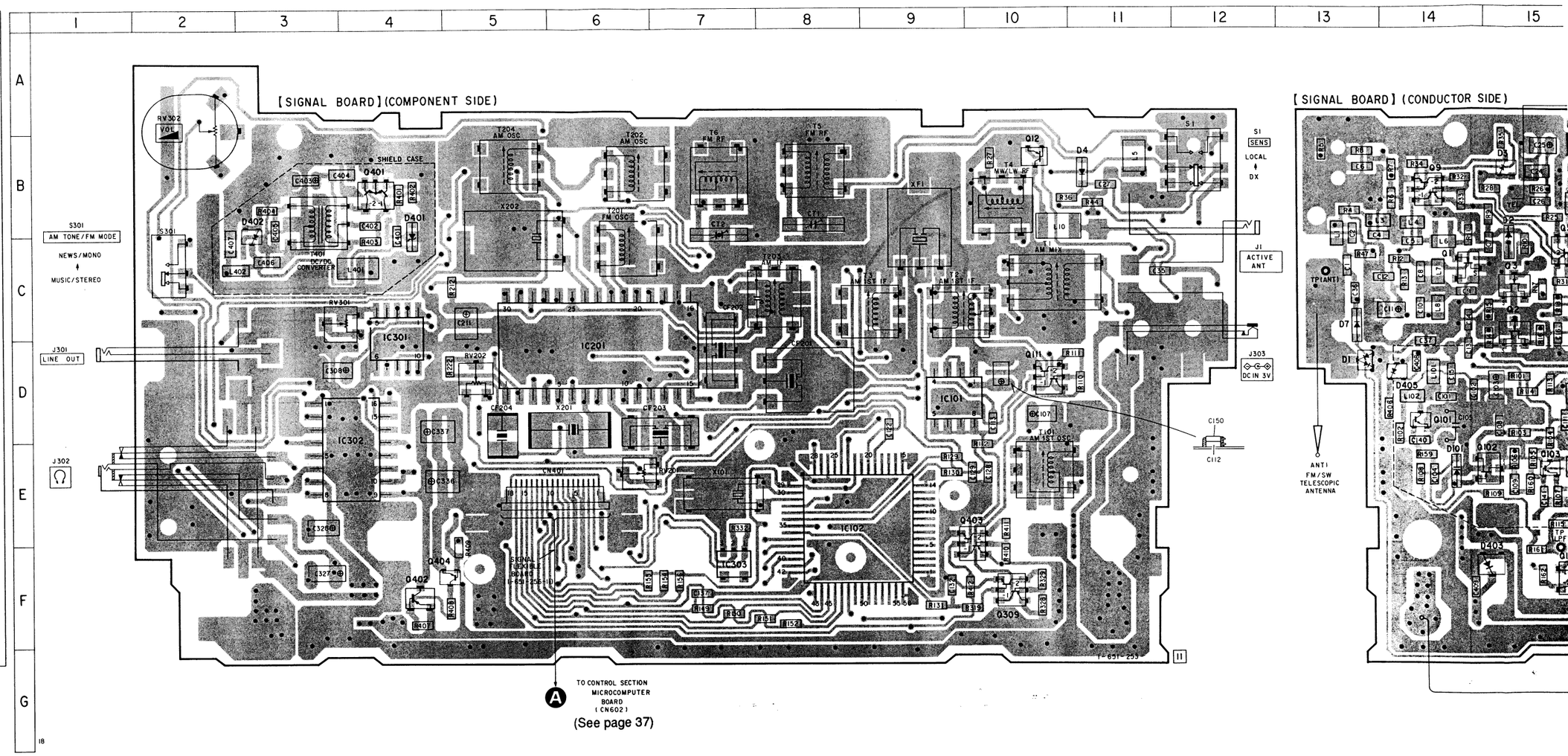

Note:

- ○—— : parts extracted from the component side.
- —— : parts extracted from the conductor side.
- ● : Through hole.
- ▒ : Pattern from the side which enables seeing.

(The other layers'patterns are not indicated.)

Caution:	
Pattern face side: (Conductor Side)	Parts on the pattern face side seen from the pattern face are indicated.
Parts face side: (Component Side)	Parts on the parts face side seen from the parts face are indicated.

www.manualscenter.com

6	7	8	9	10	11	12	13	14	15	16	17	18	19	20	21	22	23

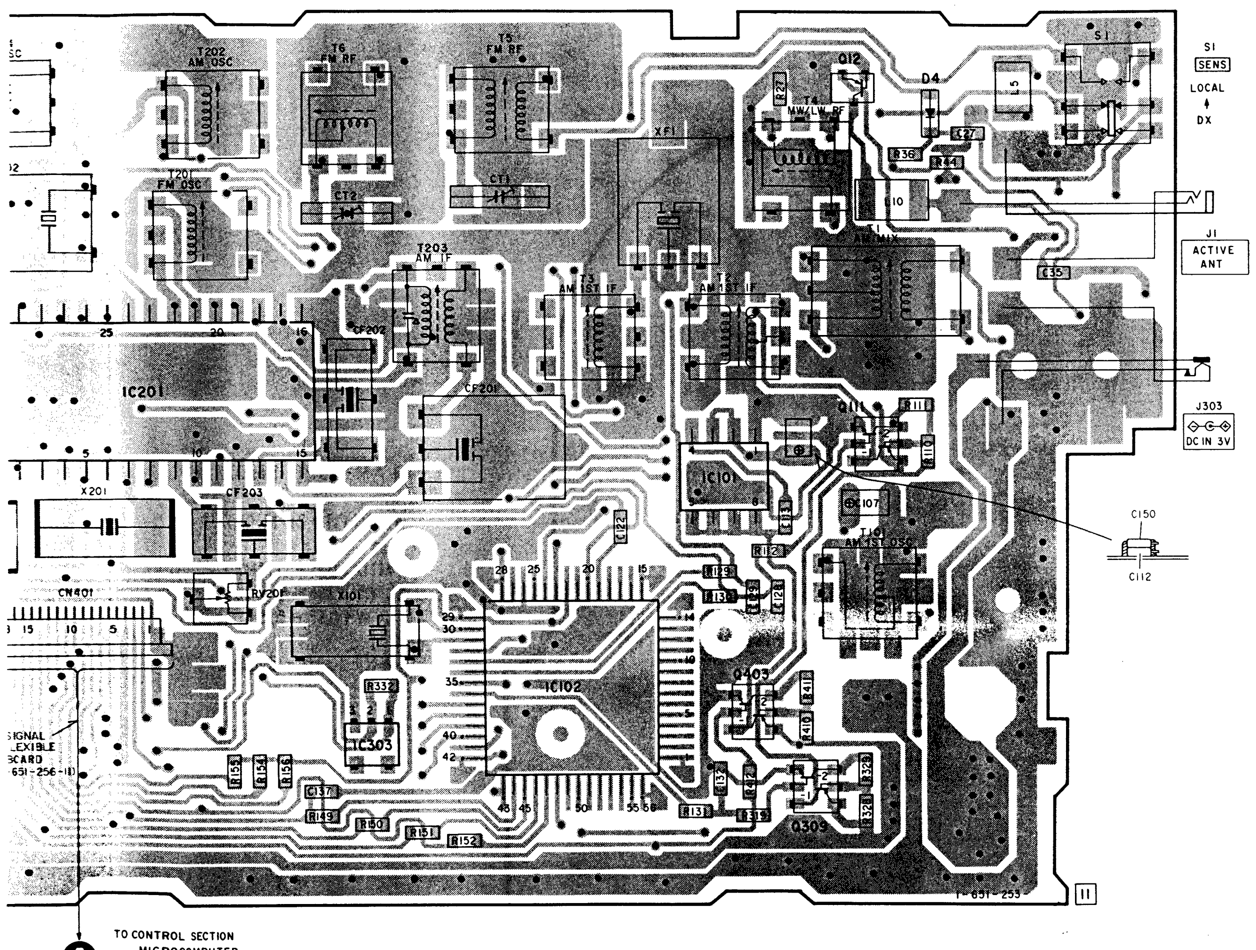

TO CONTROL SECTION MICROCOMPUTER BOARD (CN602)

(See page 37)

[SIGNAL BOARD] (CONDUCTOR SIDE)

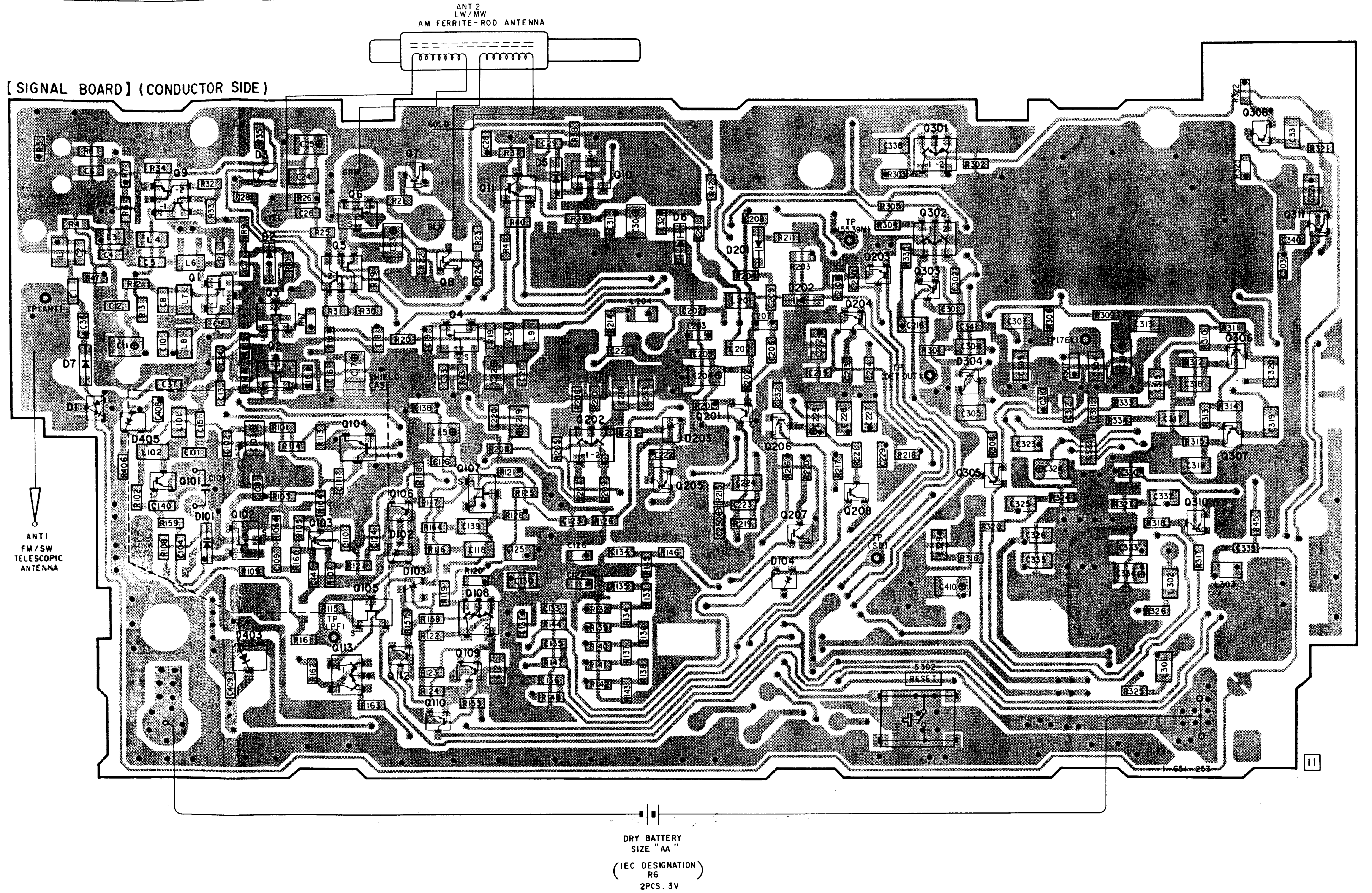

www.manualscenter.com

Note:

- All capacitors are in μF unless otherwise noted. pF: μμF 50WV or less are not indicated except for electrolytics and tantalums.
- All resistors are in Ω and 1/4 W or less unless otherwise specified.
- ▬ : B+ Line
- ▭ : adjustment for repair.
- Power voltage is dc 3 V and fed with regulated dc power supply from external power voltage jack.
- Voltage and waveforms are dc with respect to ground under detuned conditions.
  no mark : FM
  ( ) : LW/MW
  《 》: SW
- Voltages are taken with a VOM (Input Impedance 10MΩ). Voltage variations may be noted due to normal production tolerances.
- Waveforms are taken with a oscilloscope. Voltage variations may be noted due to normal production tolerances.
- Circled numbers refer to waveforms.
- Signal path.
  ⇨ : FM
  ⇨⇨ : LW/MW
  ➡ : SW

IC101 LA5002M

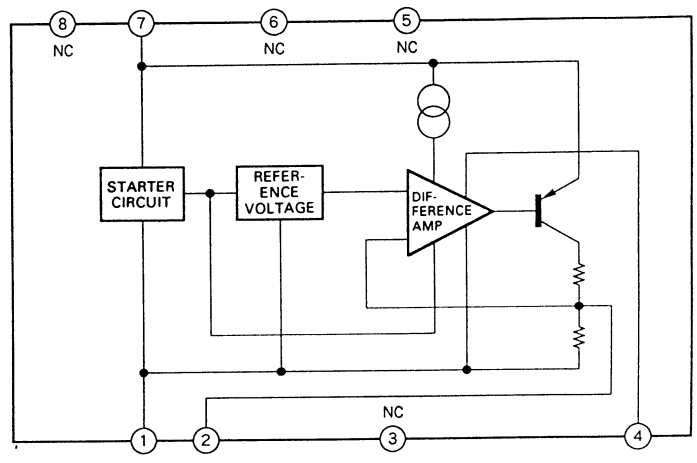

4-7 SCHEMATIC DIAGRAM —TUNER Section—

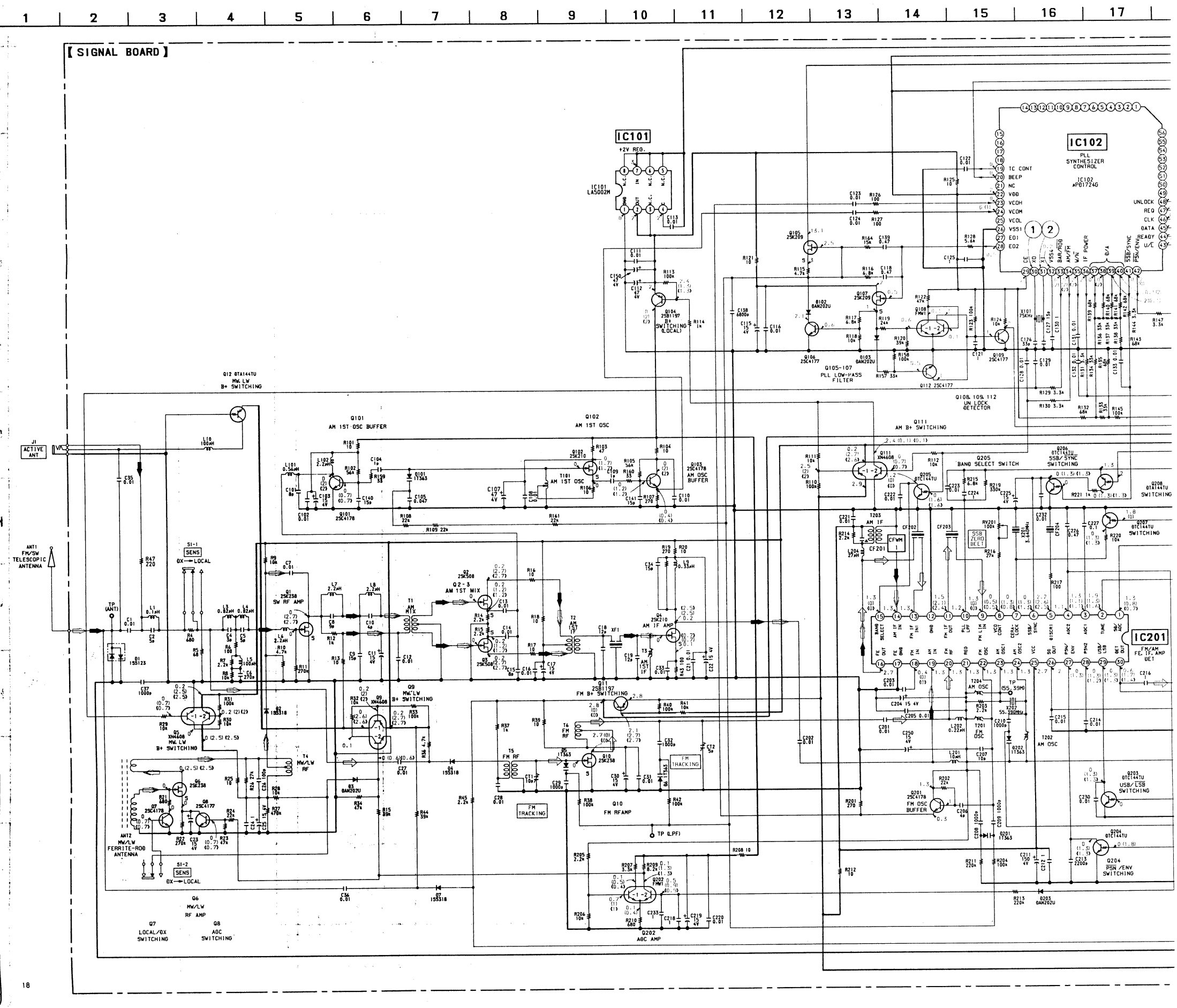

www.manualscenter.com

IC301 LA3335M

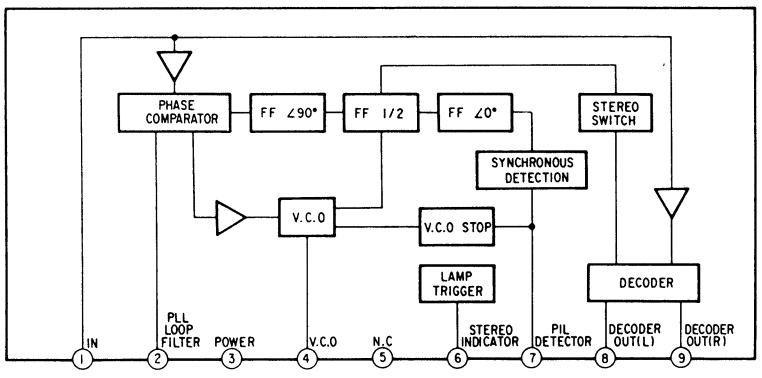

IC302 CXA1622M

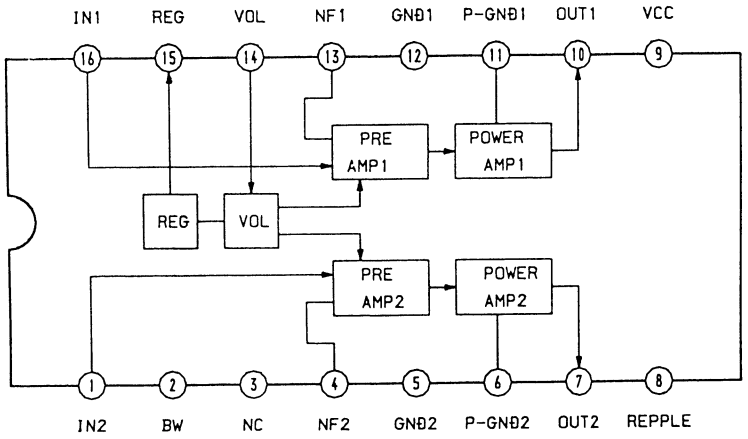

IC201 CXA1376AM

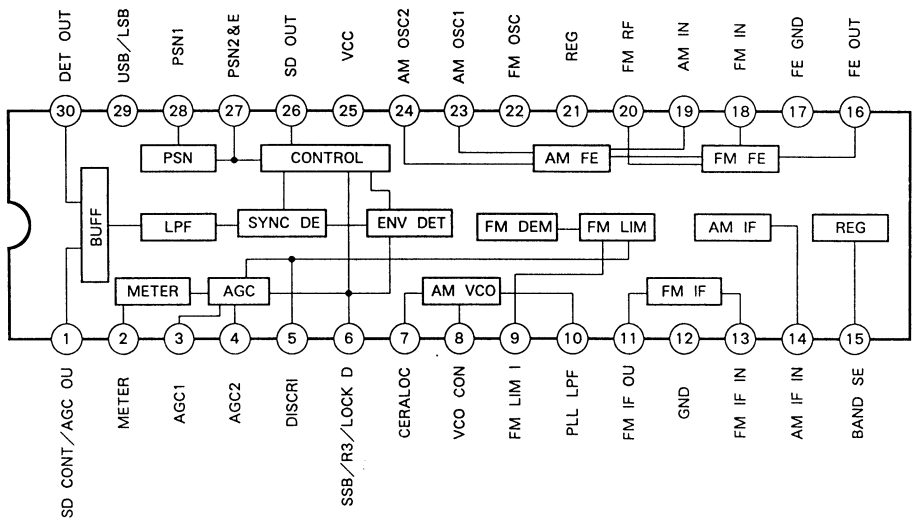

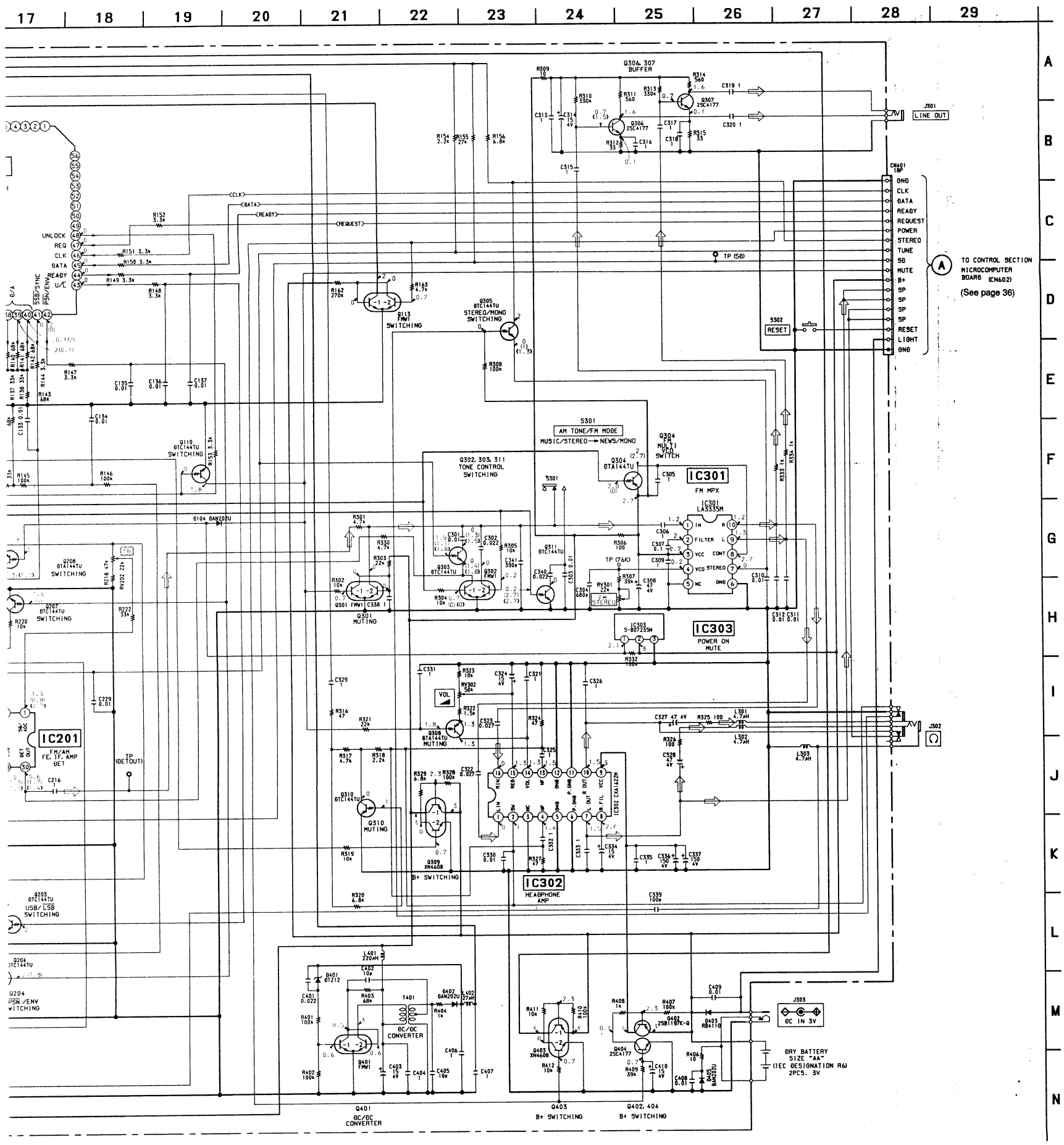

• **Waveforms**

【SIGNAL BOARD】

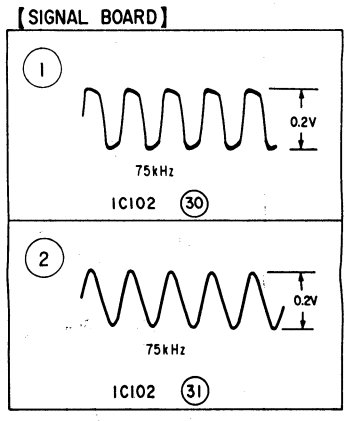

www.manualscenter.com

www.manualscenter.com

4-8. SCHEMATIC DIAGRAM —CONTROL Section—

• **Waveforms**

[MICROCOMPUTER BOARD]

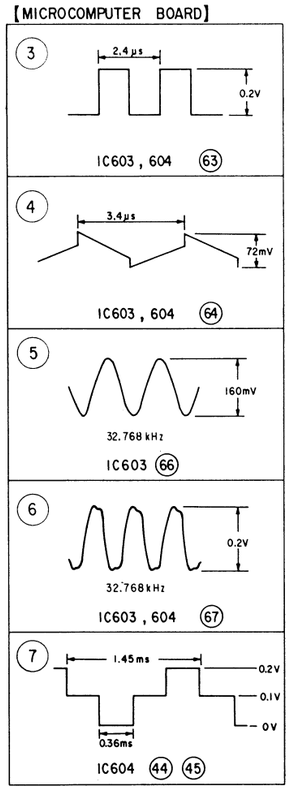

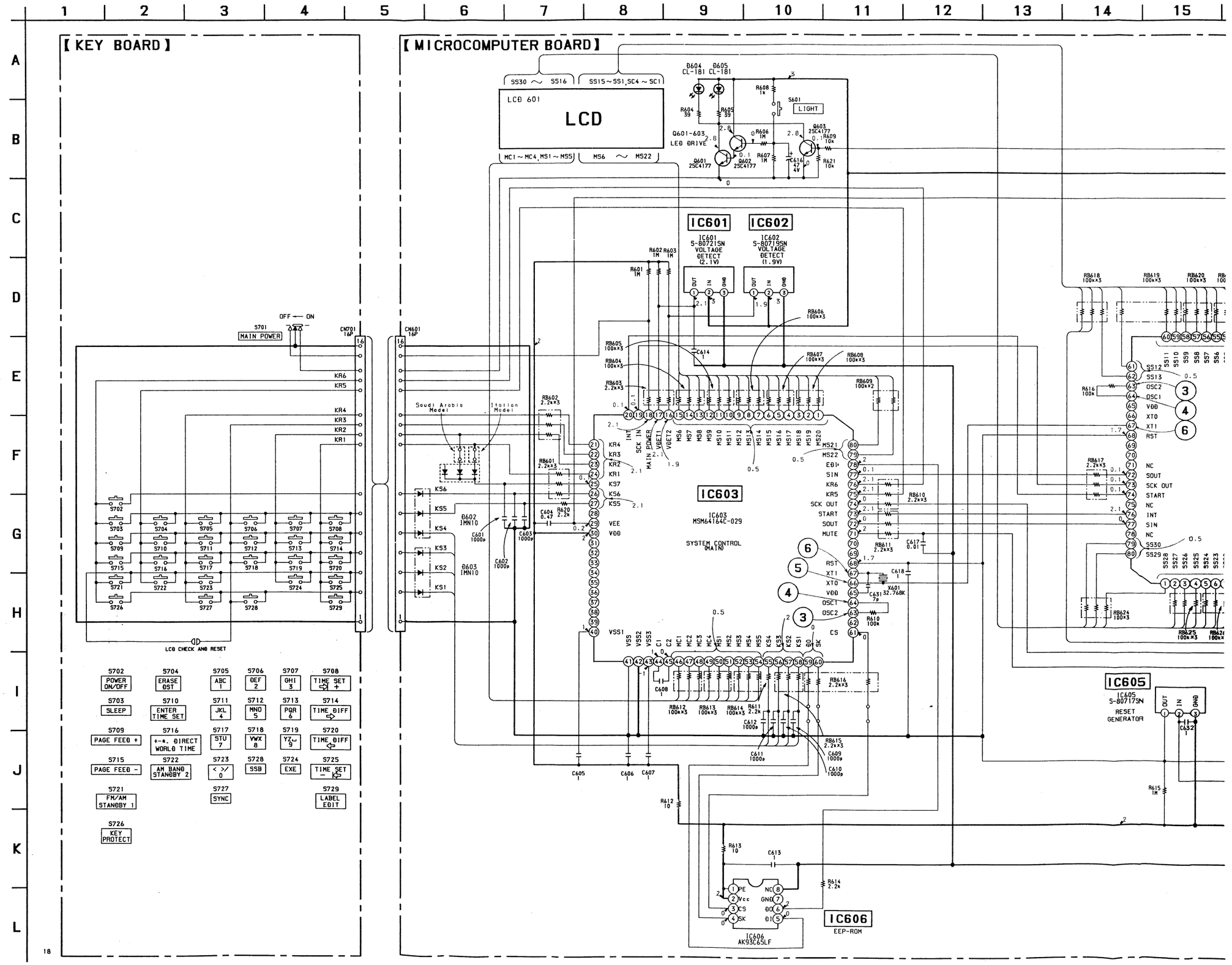

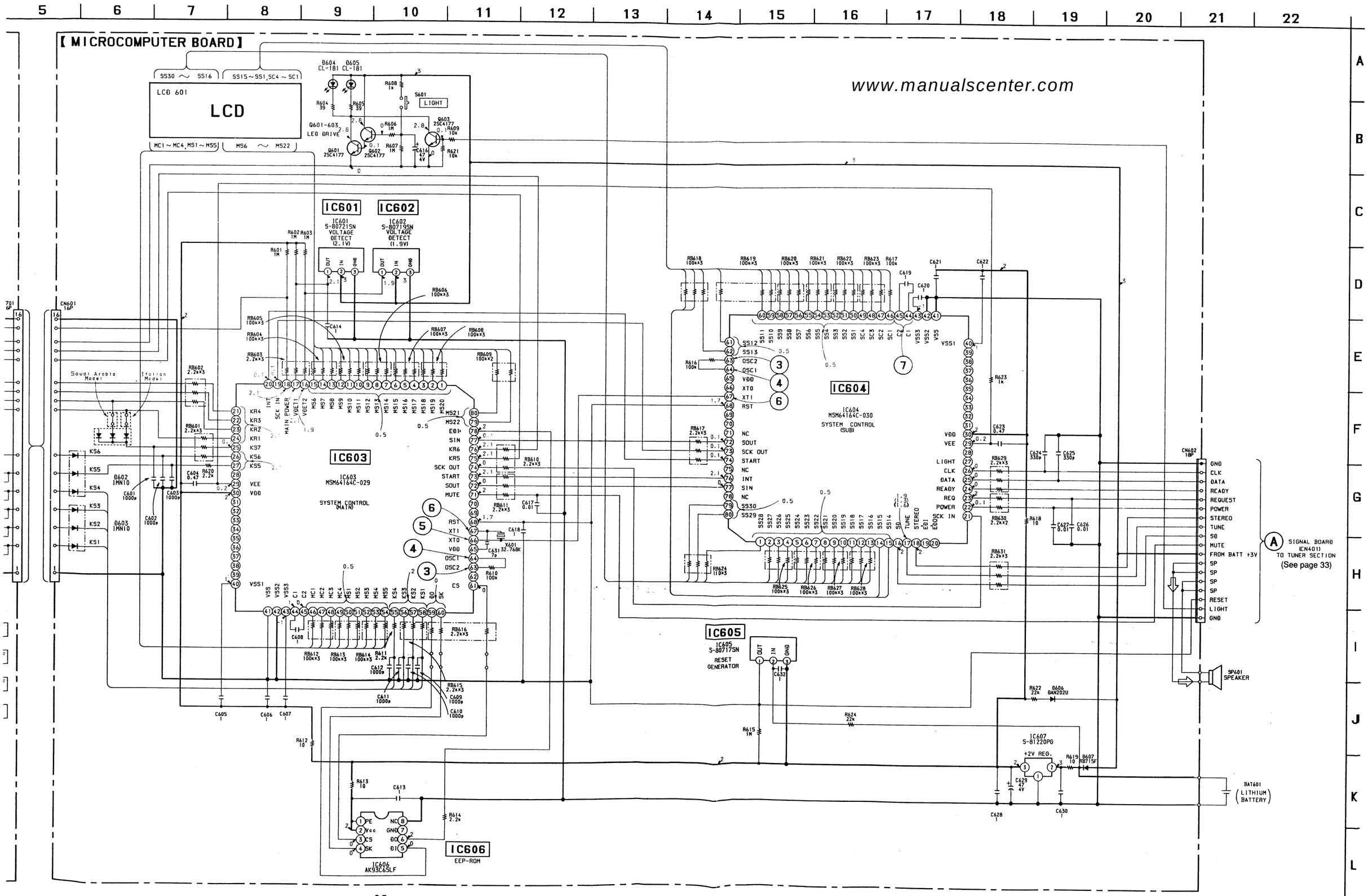

www.manualscenter.com

Note:

- All capacitors are in μF unless otherwise noted. pF: μμF 50WV or less are not indicated except for electrolytics and tantalums.
- All resistors are in Ω and 1/4 W or less unless otherwise specified.
- ▬▬ : B+ Line
- ▭ : adjustment for repair.
- Power voltage is dc 3 V and fed with regulated dc power supply from external power voltage jack.
- Voltage and waveforms are dc with respect to ground under detuned conditions.
  no mark : FM
  ( ) : LW/MW
  《 》: SW
- Voltages are taken with a VOM (Input Impedance 10MΩ). Voltage variations may be noted due to normal production tolerances.
- Waveforms are taken with a oscilloscope. Voltage variations may be noted due to normal production tolerances.
- Circled numbers refer to waveforms.
- Signal path.
  ⇨ : FM

IC606 AK93C65LF-E1

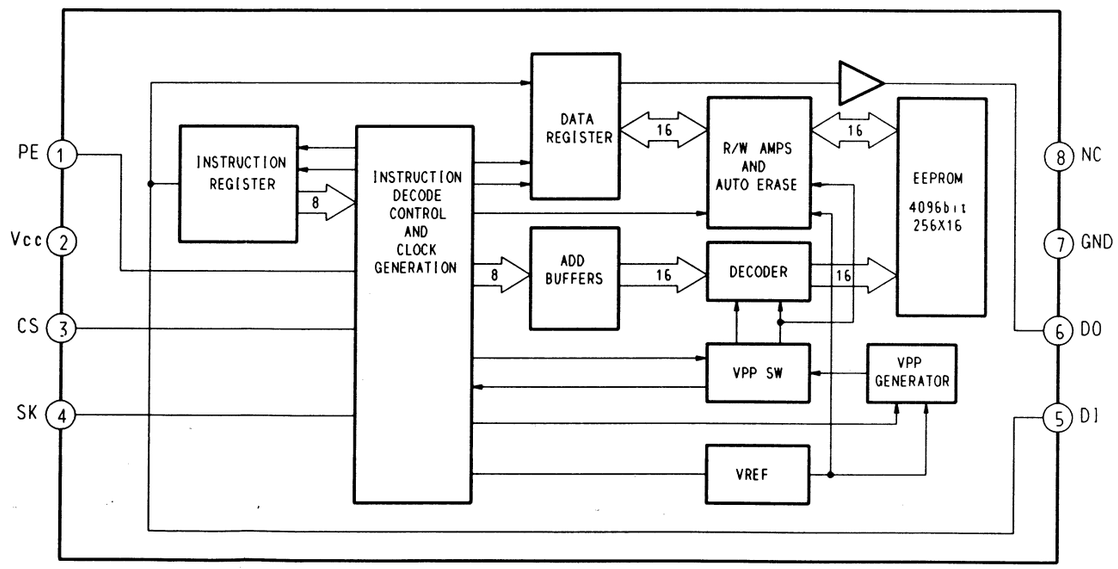

www.manualscenter.com

4-9. PRINTED WIRING BOARDS –CONTROL Section–

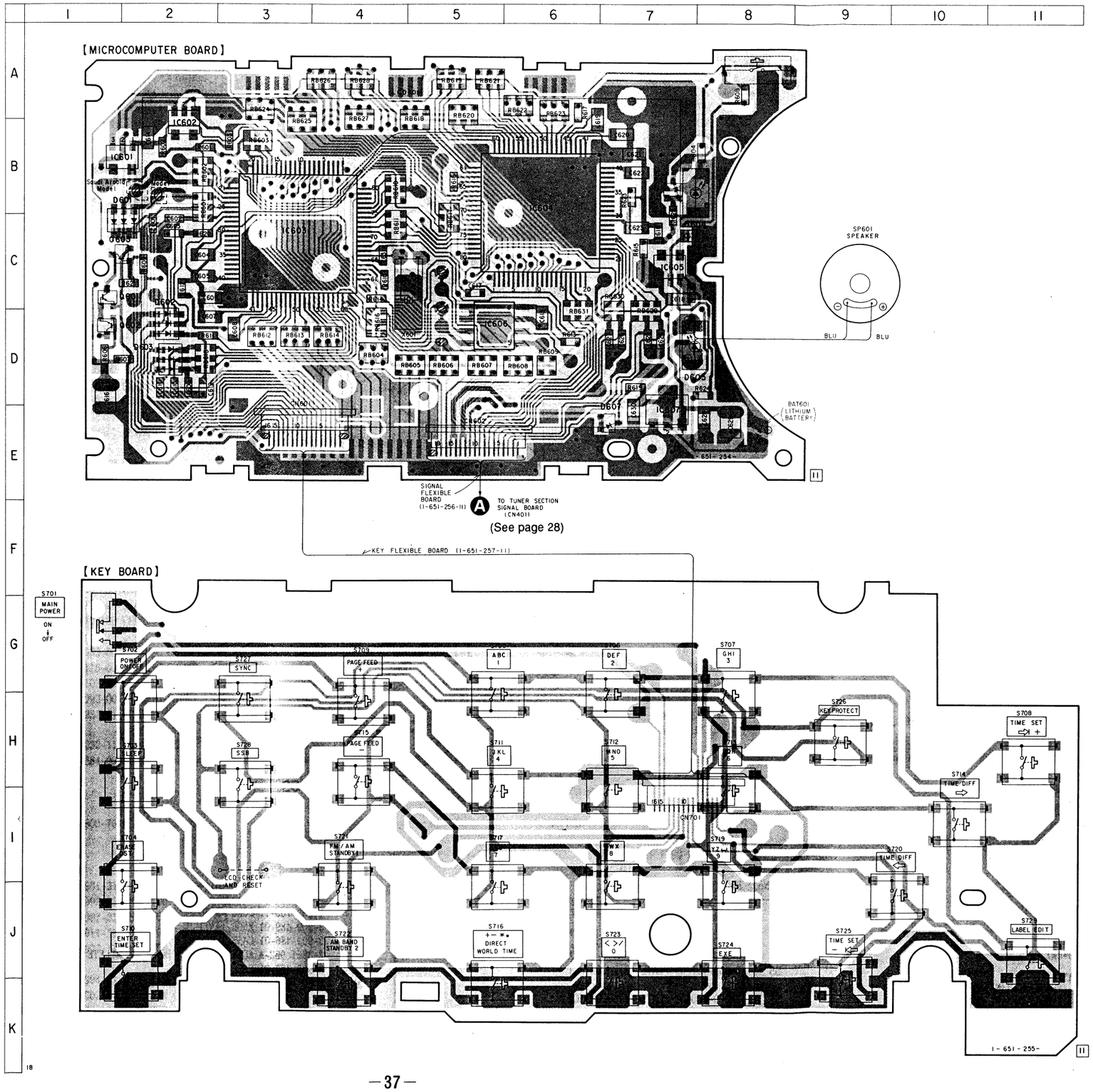

- **Semiconductor Location**

Ref. No.	Location
D601	C-1
D602	D-2
D603	D-2
D604	B-7
D605	D-7
D606	B-7
D607	E-7
IC601	B-1
IC602	B-2
IC603	C-3
IC604	B-6
IC605	C-7
IC606	D-5
IC607	E-7
Q601	C-2
Q602	D-2
Q603	C-1

www.manualscenter.com

Note:

- ○—— : parts extracted from the component side.
- —— : parts extracted from the conductor side.
- ● : Through hole.
- : Pattern on the side which is seen.
- : Pattern of the rear side.
- ▭ : Chip components extracted from the rear side.

SECTION 5
EXPLODED VIEWS

NOTE:
- -xx,-x mean standardized parts, so they may have some differences from the original one.
- Color Indication of Appearance Parts
  Example:
  KNOB, BALANCE (WHITE)...(RED)
  ↑ Parts color ↑ Cabinet's color
- Items marked "*" are not stocked since they are seldom required for routine service. Some delay should be anticipated when ordering these items.
- The mechanical parts with no reference number in the exploded views are not supplied.
- Abbreviation
  EA: Saudi Arabia

5-1. MAIN SECTION

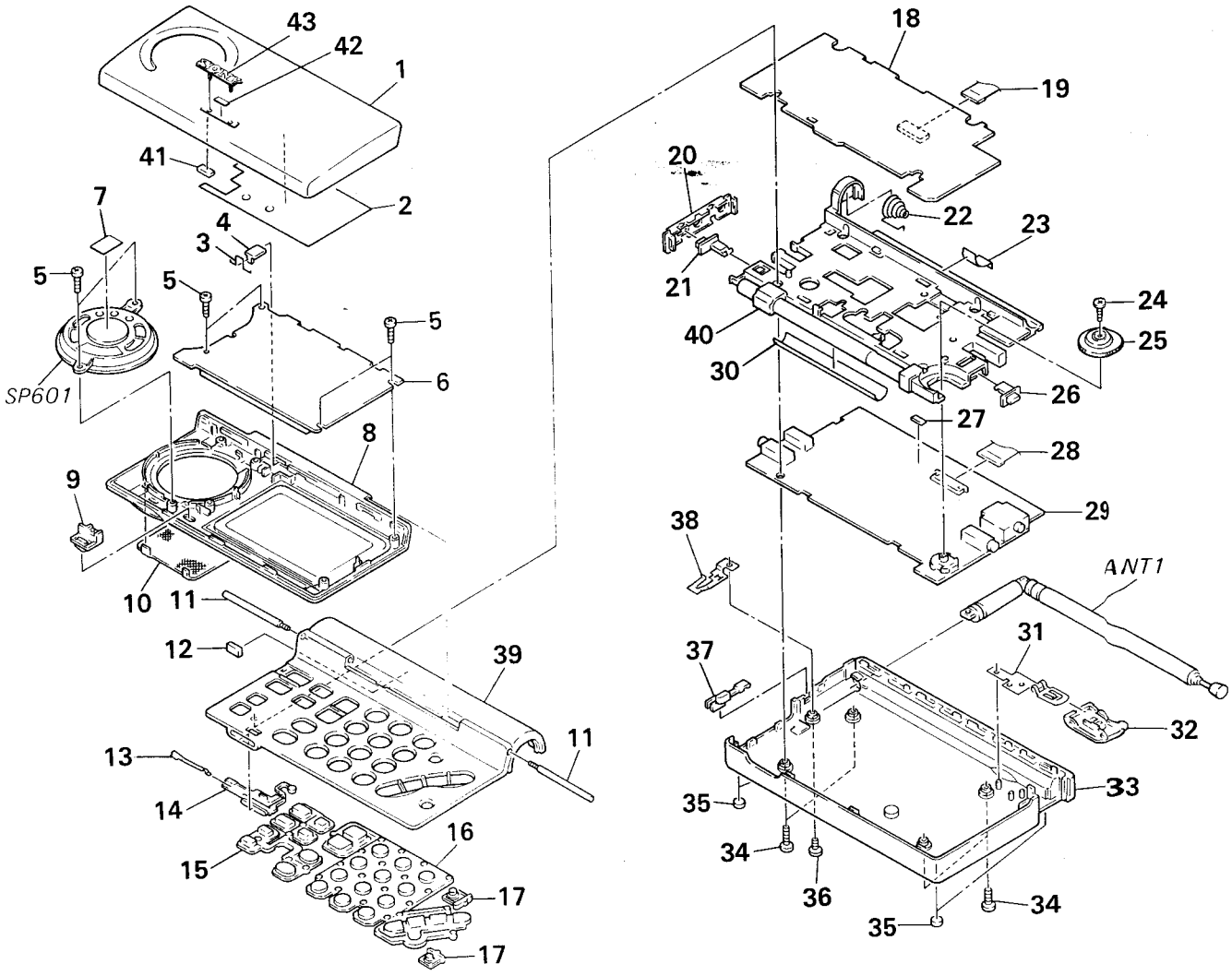

Ref.No.	Part No.	Description	Remark
1	3-909-832-01	CABINET (REAR) (LID)	
2	3-911-703-01	COPPER LEAF	
3	3-913-417-01	SPRING	
4	3-911-702-01	PLATE, CLICK	
5	3-384-797-01	SCREW	
*6	A-3661-961-A	MICROCOMPUTER BOARD, COMPLETE	
7	3-565-241-01	CLOTH (B)1 UNWEAVED	
8	X-3367-833-1	CABINET (FRONT) (LID) ASSY	
9	3-909-839-01	BUTTON (LIGHT)	
10	3-909-851-01	GRILLE, SP	
11	3-909-857-01	SCREW, SHAFT	
12	3-913-419-01	CUSHION	
13	3-911-701-01	SPRING (B), LEAF	
14	3-909-842-01	CLAW (LOCK)	
15	3-909-838-01	BUTTON (MEMORY)	
16	3-909-837-01	BUTTON (10 KEY)	
17	3-909-840-01	BUTTON (KYEPRO)	
*18	A-3661-960-A	KEY BOARD, COMPLETE	
19	1-651-257-11	PC BOARD, FLEXIBLE (KEY)	
20	3-909-847-01	PANEL, SIDE	
21	3-909-846-01	KNOB (SENS)	
22	3-909-853-01	SPRING, BATTERY COIL	

Ref.No.	Part No.	Description	Remark
23	4-017-441-01	CUSHION (B)	
24	3-892-318-00	SCREW, SMALL	
25	3-909-836-01	KNOB (VOL)	
26	3-909-835-01	KNOB (TONE)	
27	3-831-441-XX	CUSHION	
28	1-651-256-11	PC BOARD, FLEXIBLE (SIGNAL)	
*29	A-3679-561-A	SIGNAL BOARD, COMPLETE	
30	9-911-830-XX	CUSHION	
*31	A-3638-005-A	TERMINAL (+) ASSY, BATTERY	
32	3-909-841-01	LID, BATTERY CASE	
33	3-909-831-01	CABINET (REAR) (MAIN)	
34	3-910-063-01	SCREW, TAPPING (1.7X10)	
35	3-910-062-01	FOOT, RUBBER	
36	3-719-381-01	SCREW (M2X4)	
37	3-909-834-01	KNOB (POWER)	
38	3-909-492-01	PLATE (ANT), CONTACT	
39	X-3368-534-1	CABINET (FRONT) (MAIN) ASSY (except EA)	
39	X-3368-535-1	CABINET (FRONT) (MAIN) ASSY (EA)	
40	X-3368-536-1	CHASSIS ASSY	
*41	4-023-575-01	CUSHION, LID	
42	3-355-482-01	SHEET (KT), ADHESIVE	
43	3-736-833-01	EMBLEM (NO.3), SONY	
ANT1	1-501-658-11	ANTENNA, TELESCOPIC	

5-2. ACTIVE ANTENNA (AN-100) SECTION (ICF-SW100S)

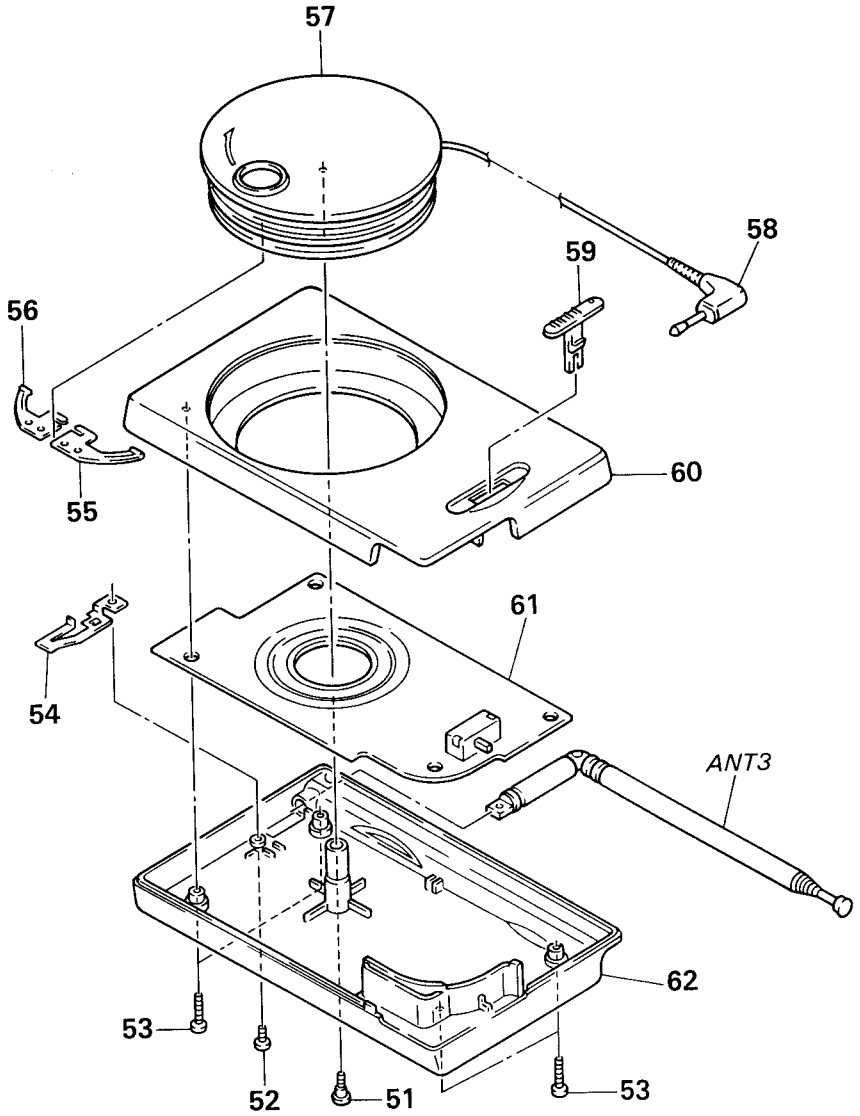

Ref.No.	Part No.	Description	Remark
51	3-895-517-11	SCREW (2), TAPPING, STEP	
52	7-621-255-20	SCREW +P 2X4	
53	3-910-063-01	SCREW, TAPPING (1.7X10)	
54	3-909-492-01	PLATE (ANT), CONTACT	
55	3-909-491-01	PLATE (B), CONTACT	
56	3-909-490-01	PLATE (A), CONTACT	
57	3-909-488-01	REEL	

Ref.No.	Part No.	Description	Remark
58	1-559-706-11	CORD (WITH PLUG)	
59	3-909-489-01	KNOB (ANT)	
60	3-909-486-01	CASE (UPPER)	
*61	A-3661-962-A	ACTIVE ANTENNA BOARD, COMPLETE	
62	3-909-487-01	CASE (LOWER)	
ANT3	1-501-658-11	ANTENNA, TELESCOPIC	
SP601	1-504-493-11	SPEAKER (4CM)	

www.manualscenter.com

SECTION 6
ELECTRICAL PARTS LIST

ACTIVE ANTENNA

NOTE:
- Due to standardization, replacements in the parts list may be different from the parts specified in the diagrams or the components used on the set.
- -XX and -X mean standardized parts, so they may have some difference from the original one.
- RESISTORS
  All resistors are in ohms.
  METAL: Metal-film resistor.
  METAL OXIDE: Metal oxide-film resistor.
  F: nonflammable
- Items marked "*" are not stocked since they are seldom required for routine service. Some delay should be anticipated when ordering these items.
- SEMICONDUCTORS
  In each case, u : μ, for example:
  uA··· : μA···, uPA··· : μPA···, uPB··· : μPB···, uPC··· : μPC···, uPD··· : μPD···
- CAPACITORS
  uF : μF
- COILS
  uH : μH
- Abbreviations
  CND: Canadian
  G: German
  IT: Italian
  FR: French
  EA: Saudi Arabia
  AUS: Australian
  JE: Tourist

Ref.No.	Part No.	Description			Remark
*	A-3661-962-A	ACTIVE ANTENNA BOARD, COMPLETE (ICF-SW100S)			
		**********			
		< CAPACITOR >			
C1	1-163-125-00	CERAMIC CHIP	220PF	5%	50V
C2	1-163-088-00	CERAMIC CHIP	5PF		50V
C3	1-163-086-00	CERAMIC CHIP	3PF		50V
C5	1-164-232-11	CERAMIC CHIP	0.01uF		50V
C6	1-164-232-11	CERAMIC CHIP	0.01uF		50V
C7	1-163-117-00	CERAMIC CHIP	100PF	5%	50V
C8	1-163-121-00	CERAMIC CHIP	150PF	5%	50V
C9	1-163-117-00	CERAMIC CHIP	100PF	5%	50V
C10	1-163-132-00	CERAMIC CHIP	430PF	5%	50V
C11	1-163-125-00	CERAMIC CHIP	220PF	5%	50V
C12	1-163-117-00	CERAMIC CHIP	100PF	5%	50V
C13	1-163-105-00	CERAMIC CHIP	33PF	5%	50V
C14	1-163-127-00	CERAMIC CHIP	270PF	5%	50V
C15	1-163-117-00	CERAMIC CHIP	100PF	5%	50V
C16	1-163-107-00	CERAMIC CHIP	39PF	5%	50V
C17	1-163-083-00	CERAMIC CHIP	1PF		50V
C18	1-163-115-00	CERAMIC CHIP	82PF	5%	50V
C19	1-163-107-00	CERAMIC CHIP	39PF	5%	50V
C20	1-163-093-00	CERAMIC CHIP	10PF	5%	50V
C21	1-164-232-11	CERAMIC CHIP	0.01uF		50V
C22	1-164-232-11	CERAMIC CHIP	0.01uF		50V
C23	1-124-584-00	ELECT	100uF	20%	10V
		< DIODE >			
D1	8-719-800-76	DIODE 1SS226			
		< COIL >			
L1	1-410-981-31	INDUCTOR CHIP	0.1uH		
L2	1-410-992-11	INDUCTOR CHIP	0.82uH		
L3	1-410-997-31	INDUCTOR CHIP	2.2uH		
L4	1-412-011-31	INDUCTOR CHIP	27uH		
L5	1-410-993-11	INDUCTOR CHIP	1uH		
L6	1-410-994-11	INDUCTOR CHIP	1.2uH		
L7	1-412-002-31	INDUCTOR CHIP	4.7uH		
L8	1-410-998-31	INDUCTOR CHIP	2.7uH		
L9	1-412-003-41	INDUCTOR CHIP	5.6uH		
L10	1-412-002-31	INDUCTOR CHIP	4.7uH		
L11	1-410-997-31	INDUCTOR CHIP	2.2uH		
L12	1-410-993-11	INDUCTOR CHIP	1uH		
L13	1-412-006-31	INDUCTOR CHIP	10uH		
L14	1-410-997-31	INDUCTOR CHIP	2.2uH		
L15	1-410-997-31	INDUCTOR CHIP	2.2uH		
L17	1-410-997-31	INDUCTOR CHIP	2.2uH		
		< TRANSISTOR >			
Q1	8-729-105-89	TRANSISTOR	2SK238-K16A		
Q2	8-729-105-89	TRANSISTOR	2SK238-K16A		
		< RESISTOR >			
R1	1-216-025-00	METAL CHIP	100	5%	1/10W
R2	1-216-057-00	METAL CHIP	2.2K	5%	1/10W
R3	1-216-113-00	METAL CHIP	470K	5%	1/10W
R4	1-216-033-00	METAL CHIP	220	5%	1/10W
R5	1-216-001-00	METAL CHIP	10	5%	1/10W
R6	1-216-057-00	METAL CHIP	2.2K	5%	1/10W
R7	1-216-113-00	METAL CHIP	470K	5%	1/10W
R8	1-216-001-00	METAL CHIP	10	5%	1/10W
R9	1-216-033-00	METAL CHIP	220	5%	1/10W
R10	1-216-017-00	METAL CHIP	47	5%	1/10W
R11	1-216-057-00	METAL CHIP	2.2K	5%	1/10W
R12	1-216-009-00	METAL CHIP	22	5%	1/10W
R13	1-216-025-00	METAL CHIP	100	5%	1/10W
		< SWITCH >			
S1	1-571-717-21	SWITCH, SLIDE (AM BPF FREQ WIDE/LW/MID/HIGH)			
		< TRANSFORMER >			
T1	1-426-357-11	TRANSFORMER, AM RF			
		**********			

KEY MICROCOMPUTER

Ref.No.	Part No.	Description	Remark
*	A-3661-960-A	KEY BOARD, COMPLETE	
		**********	
		< CONNECTOR >	
CN701	1-764-370-11	HOUSING, FPC CONNECTOR(ZIF)16P	
		< SWITCH >	
S701	1-571-275-11	SWITCH, SLIDE (MAIN POWER)	
S702	1-572-938-21	SWITCH, TACTIL (POWER ON/OFF)	
S703	1-572-938-21	SWITCH, TACTIL (SLEEP)	
S704	1-572-938-21	SWITCH, TACTIL (ERASE DST)	
S705	1-572-938-21	SWITCH, TACTIL (ABC 1)	
S706	1-572-938-21	SWITCH, TACTIL (DEF 2)	
S707	1-572-938-21	SWITCH, TACTIL (GHI 3)	
S708	1-572-938-21	SWITCH, TACTIL (TIME SET ⇨ +)	
S709	1-572-938-21	SWITCH, TACTIL (PAGE FEED +)	
S710	1-572-938-21	SWITCH, TACTIL (ENTER TIME SET)	
S711	1-572-938-21	SWITCH, TACTIL (JKL 4)	
S712	1-572-938-21	SWITCH, TACTIL (MNO 5)	
S713	1-572-938-21	SWITCH, TACTIL (PQR 6)	
S714	1-572-938-21	SWITCH, TACTIL (TIME DIFF ⇨)	
S715	1-572-938-21	SWITCH, TACTIL (PAGE FEED -)	
S716	1-572-938-21	SWITCH, TACTIL (+ - *. DIRECT WORLD TIME)	
S717	1-572-938-21	SWITCH, TACTIL (STU 7)	
S718	1-572-938-21	SWITCH, TACTIL (VWX 8)	
S719	1-572-938-21	SWITCH, TACTIL (YZ␣9)	
S720	1-572-938-21	SWITCH, TACTIL (TIME DIFF ⇦)	
S721	1-572-938-21	SWITCH, TACTIL (FM/AM STANDBY 1)	
S722	1-572-938-21	SWITCH, TACTIL (AM BAND STANDBY 2)	
S723	1-572-938-21	SWITCH, TACTIL (< > / 0)	
S724	1-572-938-21	SWITCH, TACTIL (EXE)	
S725	1-572-938-21	SWITCH, TACTIL (TIME SET - ⇦)	
S726	1-572-938-21	SWITCH, TACTIL (KEY PROTECT)	
S727	1-572-938-21	SWITCH, TACTIL (SYNC)	
S728	1-572-938-21	SWITCH, TACTIL (SSB)	
S729	1-572-938-21	SWITCH, TACTIL (LABEL EDIT)	

****

Ref.No.	Part No.	Description	Remark
*	A-3661-961-A	MICROCOMPUTER BOARD, COMPLETE	
		**********	

Ref.No.	Part .	
51	3-895-517-.	**********
52	7-621-255-20	
53	3-910-063-01	SC.
54	3-909-492-01	PLATE
55	3-909-491-01	PLATE (L.
56	3-909-490-01	PLATE (A), Cu.
57	3-909-488-01	REEL

Ref.No.	Part No.	Description			Remark
		< CAPACITOR >			
C601	1-162-964-11	CERAMIC CHIP	0.001uF	10%	50V
C602	1-162-964-11	CERAMIC CHIP	0.001uF	10%	50V
C603	1-162-964-11	CERAMIC CHIP	0.001uF	10%	50V
C604	1-164-005-11	CERAMIC CHIP	0.47uF		25V
C605	1-164-346-11	CERAMIC CHIP	1uF		16V
C606	1-164-346-11	CERAMIC CHIP	1uF		16V
C607	1-164-346-11	CERAMIC CHIP	1uF		16V
C608	1-164-346-11	CERAMIC CHIP	1uF		16V
C609	1-162-964-11	CERAMIC CHIP	0.001uF	10%	50V
C610	1-162-964-11	CERAMIC CHIP	0.001uF	10%	50V
C611	1-162-964-11	CERAMIC CHIP	0.001uF	10%	50V
C612	1-162-964-11	CERAMIC CHIP	0.001uF	10%	50V
C613	1-164-346-11	CERAMIC CHIP	1uF		16V
C614	1-164-346-11	CERAMIC CHIP	1uF		16V
C616	1-135-254-11	TANTAL. CHIP	47uF	20%	4V
C617	1-162-970-11	CERAMIC CHIP	0.01uF	10%	25V
C618	1-164-346-11	CERAMIC CHIP	1uF		16V
C619	1-164-346-11	CERAMIC CHIP	1uF		16V
C620	1-164-346-11	CERAMIC CHIP	1uF		16V
C621	1-164-346-11	CERAMIC CHIP	1uF		16V
C622	1-164-346-11	CERAMIC CHIP	1uF		16V
C623	1-164-005-11	CERAMIC CHIP	0.47uF		25V
C624	1-162-961-11	CERAMIC CHIP	330PF	10%	50V
C625	1-162-961-11	CERAMIC CHIP	330PF	10%	50V
C626	1-162-970-11	CERAMIC CHIP	0.01uF	10%	25V
C627	1-162-970-11	CERAMIC CHIP	0.01uF	10%	25V
C628	1-164-346-11	CERAMIC CHIP	1uF		16V
C629	1-135-254-11	TANTAL. CHIP	47uF	20%	4V
C630	1-164-346-11	CERAMIC CHIP	1uF		16V
C631	1-162-938-11	CERAMIC CHIP	7PF	0.5PF	50V
C632	1-164-346-11	CERAMIC CHIP	1uF		16V
		< CONNECTOR >			
CN601	1-764-370-11	HOUSING, FPC CONNECTOR(ZIF)16P			
CN602	1-764-368-11	HOUSING, FPC CONNECTOR(ZIF)18P			
		< DIODE >			
D601	8-719-951-22	DIODE	IMN10		
D602	8-719-951-22	DIODE	IMN10		
D603	8-719-951-22	DIODE	IMN10		
D604	8-719-037-71	LED	CL-181G-C		
D605	8-719-037-71	LED	CL-181G-C		
D606	8-719-941-86	DIODE	DAN202U		
D607	8-719-988-82	DIODE	RB715F		

www.manualscenter.com

Ref.No.	Part No.	Description	Remark
		< IC >	
IC601	8-759-249-34	IC S-80719SN-DG	
IC602	8-759-255-02	IC S-80723SN-DL-T1	
IC603	8-759-254-75	IC MSM64164C-029	
IC604	8-759-254-74	IC MSM64164C-030	
IC605	8-759-255-03	IC S-80717SN-DE-T1	
IC606	8-759-255-05	IC AK93C65LF-E1	
IC607	8-759-255-04	IC S-81220PG-PS-T1	
		< LIQUID CRYSTAL DISPLAY >	
LCD601	1-810-427-11	DISPLAY PANEL, LIQUID CRYSTAL	
		< TRANSISTOR >	
Q601	8-729-117-32	TRANSISTOR 2SC4177-L6	
Q602	8-729-117-32	TRANSISTOR 2SC4177-L6	
Q603	8-729-117-32	TRANSISTOR 2SC4177-L6	
		< RESISTOR >	
R601	1-216-857-11	METAL CHIP 1M 5% 1/16W	
R602	1-216-857-11	METAL CHIP 1M 5% 1/16W	
R603	1-216-857-11	METAL CHIP 1M 5% 1/16W	
R604	1-216-804-11	METAL CHIP 39 5% 1/16W	
R605	1-216-804-11	METAL CHIP 39 5% 1/16W	
R606	1-216-857-11	METAL CHIP 1M 5% 1/16W	
R607	1-216-857-11	METAL CHIP 1M 5% 1/16W	
R608	1-216-821-11	METAL CHIP 1K 5% 1/16W	
R609	1-216-833-11	METAL CHIP 10K 5% 1/16W	
R610	1-216-845-11	METAL CHIP 100K 5% 1/16W	
R611	1-216-825-11	METAL CHIP 2.2K 5% 1/16W	
R612	1-216-797-11	METAL CHIP 10 5% 1/16W	
R613	1-216-797-11	METAL CHIP 10 5% 1/16W	
R614	1-216-825-11	METAL CHIP 2.2K 5% 1/16W	
R615	1-216-857-11	METAL CHIP 1M 5% 1/16W	
R616	1-216-845-11	METAL CHIP 100K 5% 1/16W	
R617	1-216-845-11	METAL CHIP 100K 5% 1/16W	
R618	1-216-797-11	METAL CHIP 10 5% 1/16W	
R619	1-216-797-11	METAL CHIP 10 5% 1/16W	
R620	1-216-825-11	METAL CHIP 2.2K 5% 1/16W	
R621	1-216-833-11	METAL CHIP 10K 5% 1/16W	
R622	1-216-837-11	METAL CHIP 22K 5% 1/16W	
R623	1-216-821-11	METAL CHIP 1K 5% 1/16W	
R624	1-216-837-11	METAL CHIP 22K 5% 1/16W	
		< RESISTOR BLOCK >	
RB601	1-236-631-11	RES, NETWORK	
RB602	1-236-631-11	RES, NETWORK	
RB603	1-236-631-11	RES, NETWORK	
RB604	1-236-502-11	RES, NETWORK	
RB605	1-236-502-11	RES, NETWORK	
RB606	1-236-502-11	RES, NETWORK	
RB607	1-236-502-11	RES, NETWORK	
RB608	1-236-502-11	RES, NETWORK	
RB609	1-236-875-11	RES, NETWORK	
RB610	1-236-631-11	RES, NETWORK	
RB611	1-236-631-11	RES, NETWORK	
RB612	1-236-502-11	RES, NETWORK	
RB613	1-236-502-11	RES, NETWORK	
RB614	1-236-502-11	RES, NETWORK	
RB615	1-236-631-11	RES, NETWORK	
RB616	1-236-631-11	RES, NETWORK	
RB617	1-236-631-11	RES, NETWORK	
RB618	1-236-502-11	RES, NETWORK	
RB619	1-236-502-11	RES, NETWORK	
RB620	1-236-502-11	RES, NETWORK	
RB621	1-236-502-11	RES, NETWORK	
RB622	1-236-502-11	RES, NETWORK	
RB623	1-236-502-11	RES, NETWORK	
RB624	1-236-502-11	RES, NETWORK	
RB625	1-236-502-11	RES, NETWORK	
RB626	1-236-502-11	RES, NETWORK	
RB627	1-236-502-11	RES, NETWORK	
RB628	1-236-502-11	RES, NETWORK	
RB629	1-236-631-11	RES, NETWORK	
RB630	1-236-855-11	RES, NETWORK	
RB631	1-236-631-11	RES, NETWORK	
		< SWITCH >	
S601	1-572-473-11	SWITCH, TACTIL (LIGHT)	
		< VIBRATOR >	
X601	1-760-201-11	VIBRATOR, CRYSTAL (32.768 kHz)	

****

*	A-3679-561-A	SIGNAL BOARD, COMPLETE	
		**********	
*	3-909-850-01	SHIELD (DDCON)	
	3-909-856-01	PLATE (BATTERY), CONTACT	
*	3-909-858-01	SHIELD (VCO)	
		< CAPACITOR >	
C1	1-162-970-11	CERAMIC CHIP 0.01uF 0% 25V	
C2	1-162-936-11	CERAMIC CHIP 5PF 0.25 PF 50V	
C4	1-162-934-11	CERAMIC CHIP 3PF 0.25 PF 50V	
C5	1-162-936-11	CERAMIC CHIP 5PF 0.25 PF 50V	
C6	1-162-958-11	CERAMIC CHIP 270PF % 50V	

SIGNAL

Ref.No.	Part No.	Description			Remark
C7	1-162-970-11	CERAMIC CHIP	0.01uF	10%	25V
C8	1-162-940-11	CERAMIC CHIP	9PF	0.5PF	50V
C9	1-162-943-11	CERAMIC CHIP	15PF	5%	50V
C10	1-162-935-11	CERAMIC CHIP	4PF	0.25PF	50V
C11	1-135-235-11	TANTAL. CHIP	15uF	20%	4V
C12	1-162-970-11	CERAMIC CHIP	0.01uF	10%	25V
C13	1-162-970-11	CERAMIC CHIP	0.01uF	10%	25V
C14	1-162-970-11	CERAMIC CHIP	0.01uF	10%	25V
C15	1-162-939-11	CERAMIC CHIP	8PF	0.5PF	50V
C16	1-162-970-11	CERAMIC CHIP	0.01uF	10%	25V
C17	1-135-235-11	TANTAL. CHIP	15uF	20%	4V
C18	1-162-942-11	CERAMIC CHIP	12PF	5%	50V
C19	1-162-942-11	CERAMIC CHIP	12PF	5%	50V
C21	1-162-970-11	CERAMIC CHIP	0.01uF	10%	25V
C22	1-135-235-11	TANTAL. CHIP	15uF	20%	4V
C23	1-135-235-11	TANTAL. CHIP	15uF	20%	4V
C24	1-164-346-11	CERAMIC CHIP	1uF		16V
C25	1-135-235-11	TANTAL. CHIP	15uF	20%	4V
C26	1-162-953-11	CERAMIC CHIP	100PF	5%	50V
C27	1-162-970-11	CERAMIC CHIP	0.01uF	10%	25V
C28	1-162-970-11	CERAMIC CHIP	0.01uF	10%	25V
C29	1-162-964-11	CERAMIC CHIP	0.001uF	10%	50V
C30	1-135-235-11	TANTAL. CHIP	15uF	20%	4V
C31	1-162-970-11	CERAMIC CHIP	0.01uF	10%	25V
C32	1-162-964-11	CERAMIC CHIP	0.001uF	10%	50V
C33	1-162-970-11	CERAMIC CHIP	0.01uF	10%	25V
C34	1-162-943-11	CERAMIC CHIP	15PF	5%	50V
C35	1-162-970-11	CERAMIC CHIP	0.01uF	10%	25V
C36	1-162-970-11	CERAMIC CHIP	0.01uF	10%	25V
C37	1-162-964-11	CERAMIC CHIP	0.001uF	10%	50V
C101	1-162-939-11	CERAMIC CHIP	8PF	0.5PF	50V
C102	1-162-970-11	CERAMIC CHIP	0.01uF	10%	25V
C103	1-135-235-11	TANTAL. CHIP	15uF	20%	4V
C104	1-162-930-11	CERAMIC CHIP	1PF	0.25PF	50V
C105	1-161-021-11	CERAMIC	0.047uF	10%	25V
C107	1-135-254-11	TANTAL. CHIP	47uF	20%	4V
C108	1-162-970-11	CERAMIC CHIP	0.01uF	10%	25V
C109	1-162-930-11	CERAMIC CHIP	1PF	0.25PF	50V
C110	1-162-970-11	CERAMIC CHIP	0.01uF	10%	25V
C111	1-162-970-11	CERAMIC CHIP	0.01uF	10%	25V
C112	1-135-254-11	TANTAL. CHIP	47uF	20%	4V
C113	1-162-970-11	CERAMIC CHIP	0.01uF	10%	25V
C115	1-135-235-11	TANTAL. CHIP	15uF	20%	4V
C116	1-162-970-11	CERAMIC CHIP	0.01uF	10%	25V
C118	1-107-823-11	CERAMIC CHIP	0.47uF	10%	16V
C121	1-164-346-11	CERAMIC CHIP	1uF		16V
C122	1-162-970-11	CERAMIC CHIP	0.01uF	10%	25V
C123	1-162-970-11	CERAMIC CHIP	0.01uF	10%	25V
C124	1-162-970-11	CERAMIC CHIP	0.01uF	10%	25V

Ref.No.	Part No.	Description			Remark
C125	1-164-346-11	CERAMIC CHIP	1uF		16V
C126	1-162-947-11	CERAMIC CHIP	33PF	5%	50V
C127	1-164-185-11	CERAMIC CHIP	13PF	5%	50V
C128	1-162-970-11	CERAMIC CHIP	0.01uF	10%	25V
C129	1-162-970-11	CERAMIC CHIP	0.01uF	10%	25V
C130	1-164-346-11	CERAMIC CHIP	1uF		16V
C131	1-162-970-11	CERAMIC CHIP	0.01uF	10%	25V
C132	1-162-970-11	CERAMIC CHIP	0.01uF	10%	25V
C133	1-162-970-11	CERAMIC CHIP	0.01uF	10%	25V
C134	1-162-970-11	CERAMIC CHIP	0.01uF	10%	25V
C135	1-162-970-11	CERAMIC CHIP	0.01uF	10%	25V
C136	1-162-970-11	CERAMIC CHIP	0.01uF	10%	25V
C137	1-162-970-11	CERAMIC CHIP	0.01uF	10%	25V
C138	1-162-969-11	CERAMIC CHIP	0.0068uF	10%	25V
C139	1-107-823-11	CERAMIC CHIP	0.47uF	10%	16V
C140	1-162-943-11	CERAMIC CHIP	15PF	5%	50V
C141	1-162-943-11	CERAMIC CHIP	15PF	5%	50V
C150	1-135-254-11	TANTAL. CHIP	47uF	20%	4V
C201	1-162-970-11	CERAMIC CHIP	0.01uF	10%	25V
C202	1-162-970-11	CERAMIC CHIP	0.01uF	10%	25V
C203	1-162-970-11	CERAMIC CHIP	0.01uF	10%	25V
C204	1-135-235-11	TANTAL. CHIP	15uF	20%	4V
C205	1-162-970-11	CERAMIC CHIP	0.01uF	10%	25V
C206	1-162-935-11	CERAMIC CHIP	4PF	0.25PF	50V
C207	1-162-941-11	CERAMIC CHIP	10PF	0.5PF	50V
C208	1-162-964-11	CERAMIC CHIP	0.001uF	10%	50V
C209	1-162-964-11	CERAMIC CHIP	0.001uF	10%	50V
C210	1-162-964-11	CERAMIC CHIP	0.001uF	10%	50V
C211	1-135-339-11	TANTAL. CHIP	150uF	20%	4V
C212	1-164-346-11	CERAMIC CHIP	1uF		16V
C213	1-162-966-11	CERAMIC CHIP	0.0022uF	10%	50V
C214	1-162-970-11	CERAMIC CHIP	0.01uF	10%	25V
C215	1-162-970-11	CERAMIC CHIP	0.01uF	10%	25V
C216	1-164-346-11	CERAMIC CHIP	1uF		16V
C218	1-164-346-11	CERAMIC CHIP	1uF		16V
C219	1-135-235-11	TANTAL. CHIP	15uF	20%	4V
C220	1-162-970-11	CERAMIC CHIP	0.01uF	10%	25V
C221	1-162-970-11	CERAMIC CHIP	0.01uF	10%	25V
C222	1-162-970-11	CERAMIC CHIP	0.01uF	10%	25V
C223	1-162-970-11	CERAMIC CHIP	0.01uF	10%	25V
C224	1-164-346-11	CERAMIC CHIP	1uF		16V
C225	1-135-235-11	TANTAL. CHIP	15uF	20%	4V
C226	1-107-823-11	CERAMIC CHIP	0.47uF	10%	16V
C227	1-163-038-00	CERAMIC CHIP	0.1uF		25V
C229	1-162-970-11	CERAMIC CHIP	0.01uF	10%	25V
C230	1-162-970-11	CERAMIC CHIP	0.01uF	10%	25V
C232	1-162-970-11	CERAMIC CHIP	0.01uF	10%	25V
C233	1-164-346-11	CERAMIC CHIP	1uF		16V

www.manualscenter.com

Ref.No.	Part No.	Description			Remark
C250	1-135-235-11	TANTAL. CHIP	15uF	20%	4V
C301	1-162-970-11	CERAMIC CHIP	0.01uF	10%	25V
C302	1-164-227-11	CERAMIC CHIP	0.022uF	10%	25V
C303	1-162-970-11	CERAMIC CHIP	0.01uF	10%	25V
C304	1-163-137-00	CERAMIC CHIP	680PF	5%	50V
C305	1-164-346-11	CERAMIC CHIP	1uF		16V
C306	1-164-346-11	CERAMIC CHIP	1uF		16V
C307	1-163-038-00	CERAMIC CHIP	0.1uF		25V
C308	1-135-254-11	TANTAL. CHIP	47uF	20%	4V
C309	1-164-346-11	CERAMIC CHIP	1uF		16V
C310	1-162-970-11	CERAMIC CHIP	0.01uF	10%	25V
C311	1-162-970-11	CERAMIC CHIP	0.01uF	10%	25V
C312	1-162-970-11	CERAMIC CHIP	0.01uF	10%	25V
C313	1-164-346-11	CERAMIC CHIP	1uF		16V
C314	1-135-235-11	TANTAL. CHIP	15uF	20%	4V
C315	1-164-346-11	CERAMIC CHIP	1uF		16V
C316	1-164-346-11	CERAMIC CHIP	1uF		16V
C317	1-164-346-11	CERAMIC CHIP	1uF		16V
C318	1-164-346-11	CERAMIC CHIP	1uF		16V
C319	1-164-346-11	CERAMIC CHIP	1uF		16V
C320	1-164-346-11	CERAMIC CHIP	1uF		16V
C321	1-164-346-11	CERAMIC CHIP	1uF		16V
C322	1-163-986-00	CERAMIC CHIP	0.027uF	10%	25V
C323	1-163-986-00	CERAMIC CHIP	0.027uF	10%	25V
C324	1-135-235-11	TANTAL. CHIP	15uF	20%	4V
C325	1-164-346-11	CERAMIC CHIP	1uF		16V
C326	1-164-346-11	CERAMIC CHIP	1uF		16V
C327	1-135-254-11	TANTAL. CHIP	47uF	20%	4V
C328	1-135-254-11	TANTAL. CHIP	47uF	20%	4V
C329	1-164-346-11	CERAMIC CHIP	1uF		16V
C330	1-162-970-11	CERAMIC CHIP	0.01uF	10%	25V
C331	1-164-346-11	CERAMIC CHIP	1uF		16V
C332	1-164-346-11	CERAMIC CHIP	1uF		16V
C333	1-164-346-11	CERAMIC CHIP	1uF		16V
C334	1-135-235-11	TANTAL. CHIP	15uF	20%	4V
C335	1-164-346-11	CERAMIC CHIP	1uF		16V
C336	1-135-339-11	TANTAL. CHIP	150uF	20%	4V
C337	1-135-339-11	TANTAL. CHIP	150uF	20%	4V
C338	1-164-346-11	CERAMIC CHIP	1uF		16V
C339	1-162-953-11	CERAMIC CHIP	100PF	5%	50V
C340	1-164-227-11	CERAMIC CHIP	0.022uF	10%	25V
C341	1-164-145-11	CERAMIC CHIP	390PF	5%	50V
C401	1-164-227-11	CERAMIC CHIP	0.022uF	10%	25V
C402	1-162-941-11	CERAMIC CHIP	10PF	0.5PF	50V
C403	1-135-235-11	TANTAL. CHIP	15uF	20%	4V
C404	1-164-346-11	CERAMIC CHIP	1uF		16V
C405	1-162-941-11	CERAMIC CHIP	10PF	0.5PF	50V
C406	1-164-346-11	CERAMIC CHIP	1uF		16V
C407	1-164-346-11	CERAMIC CHIP	1uF		16V
C408	1-162-970-11	CERAMIC CHIP	0.01uF	10%	25V
C409	1-162-970-11	CERAMIC CHIP	0.01uF	10%	25V
C410	1-135-235-11	TANTAL. CHIP	15uF	20%	4V

< FILTER >

CF201	1-760-199-11	FILTER, CERAMIC
CF202	1-579-974-11	FILTER, CERAMIC
CF203	1-579-974-11	FILTER, CERAMIC
CF204	1-577-312-91	FILTER, CERAMIC

< CONNECTOR >

CN401	1-764-369-11	CONNECTOR, FFC/FPC (ZIF) 18P

< TRIMMER >

CT1	1-141-327-11	CAP, VAR, TRIMMER (CHIP TYPE)
CT2	1-141-325-11	CAP, VAR, TRIMMER (CHIP TYPE)

< DIODE >

D1	8-719-800-76	DIODE	1SS226
D2	8-719-971-18	DIODE	1SS318
D3	8-719-941-86	DIODE	DAN202U
D4	8-719-971-18	DIODE	1SS318
D5	8-719-002-81	DIODE	1T363
D6	8-719-002-81	DIODE	1T363
D7	8-719-971-18	DIODE	1SS318
D101	8-719-002-81	DIODE	1T363
D102	8-719-941-86	DIODE	DAN202U
D103	8-719-941-86	DIODE	DAN202U
D104	8-719-941-86	DIODE	DAN202U
D201	8-719-002-81	DIODE	1T363
D202	8-719-002-81	DIODE	1T363
D203	8-719-941-86	DIODE	DAN202U
D401	8-719-977-34	DIODE	DTZ12
D402	8-719-941-86	DIODE	DAN202U
D403	8-719-975-40	DIODE	RB411D
D405	8-719-941-86	DIODE	DAN202U

< IC >

IC101	8-759-804-76	IC	LA5002M
IC102	8-759-254-73	IC	uPD1724GB-599-1A7
IC201	8-752-064-32	IC	CXA1376AM
IC301	8-759-804-98	IC	LA3335M
IC302	8-752-058-42	IC	CXA1622M
IC303	8-759-255-02	IC	S-80723SN-DL-T1

< JACK >

J1	1-764-624-11	JACK (ACTIVE ANT)
J301	1-764-624-11	JACK (LINE OUT)

SIGNAL

Ref.No.	Part No.	Description	Remark
J302	1-764-625-11	JACK (Ω)	
J303	1-764-628-21	JACK, DC(POLARITY UNIFIED TYPE)	(DC IN 3V)

< COIL >

Ref.No.	Part No.	Description	Remark
L1	1-410-981-31	INDUCTOR CHIP 0.1uH	
L3	1-410-992-11	INDUCTOR CHIP 0.82uH	
L4	1-410-992-11	INDUCTOR CHIP 0.82uH	
L5	1-410-216-31	INDUCTOR CHIP 100uH	
L6	1-410-997-31	INDUCTOR CHIP 2.2uH	
L7	1-410-997-31	INDUCTOR CHIP 2.2uH	
L8	1-410-997-31	INDUCTOR CHIP 2.2uH	
L9	1-410-987-11	INDUCTOR CHIP 0.33uH	
L10	1-410-216-31	INDUCTOR CHIP 100uH	
L101	1-410-990-31	INDUCTOR CHIP 0.56uH	
L102	1-410-997-31	INDUCTOR CHIP 2.2uH	
L201	1-412-006-31	INDUCTOR CHIP 10uH	
L202	1-410-985-11	INDUCTOR CHIP 0.22uH	
L204	1-412-011-31	INDUCTOR CHIP 27uH	
L301	1-412-002-31	INDUCTOR CHIP 4.7uH	
L302	1-412-002-31	INDUCTOR CHIP 4.7uH	
L303	1-412-002-31	INDUCTOR CHIP 4.7uH	
L401	1-410-220-31	INDUCTOR CHIP 220uH	
L402	1-412-011-31	INDUCTOR CHIP 27uH	

< TRANSISTOR >

Ref.No.	Part No.	Description	Remark
Q1	8-729-123-86	TRANSISTOR 2SK238-K16	
Q2	8-729-116-64	TRANSISTOR 2SK508-K51	
Q3	8-729-116-64	TRANSISTOR 2SK508-K51	
Q4	8-729-208-47	TRANSISTOR 2SK210-GR	
Q5	8-729-402-16	TRANSISTOR XN4608	
Q6	8-729-123-86	TRANSISTOR 2SK238-K16	
Q7	8-729-117-72	TRANSISTOR 2SC4178-F13	
Q8	8-729-117-32	TRANSISTOR 2SC4177-L6	
Q9	8-729-402-16	TRANSISTOR XN4608	
Q10	8-729-123-86	TRANSISTOR 2SK238-K16	
Q11	8-729-904-86	TRANSISTOR 2SB1197K-Q	
Q12	8-729-921-58	TRANSISTOR DTA144TU	
Q101	8-729-117-72	TRANSISTOR 2SC4178-F13	
Q102	8-729-208-47	TRANSISTOR 2SK210-GR	
Q103	8-729-117-72	TRANSISTOR 2SC4178-F13	
Q104	8-729-904-86	TRANSISTOR 2SB1197K-Q	
Q105	8-729-220-93	TRANSISTOR 2SK209-G	
			L6
C121			
C122	1		L6
C123	1-1[illegible]		
C124	1-162-[illegible]		L6

Ref.No.	Part No.	Description	Remark
Q113	8-729-903-10	TRANSISTOR FMW1	
Q201	8-729-117-72	TRANSISTOR 2SC4178-F13	
Q202	8-729-903-10	TRANSISTOR FMW1	
Q203	8-729-921-08	TRANSISTOR DTC144TU	
Q204	8-729-921-08	TRANSISTOR DTC144TU	
Q205	8-729-921-08	TRANSISTOR DTC144TU	
Q206	8-729-921-08	TRANSISTOR DTC144TU	
Q207	8-729-921-08	TRANSISTOR DTC144TU	
Q208	8-729-921-58	TRANSISTOR DTA144TU	
Q301	8-729-903-10	TRANSISTOR FMW1	
Q302	8-729-903-10	TRANSISTOR FMW1	
Q303	8-729-921-08	TRANSISTOR DTC144TU	
Q304	8-729-921-58	TRANSISTOR DTA144TU	
Q305	8-729-921-08	TRANSISTOR DTC144TU	
Q306	8-729-117-32	TRANSISTOR 2SC4177-L6	
Q307	8-729-117-32	TRANSISTOR 2SC4177-L6	
Q308	8-729-921-58	TRANSISTOR DTA144TU	
Q309	8-729-402-16	TRANSISTOR XN4608	
Q310	8-729-921-08	TRANSISTOR DTC144TU	
Q311	8-729-921-08	TRANSISTOR DTC144TU	
Q401	8-729-903-10	TRANSISTOR FMW1	
Q402	8-729-904-86	TRANSISTOR 2SB1197K-Q	
Q403	8-729-402-16	TRANSISTOR XN4608	
Q404	8-729-117-32	TRANSISTOR 2SC4177-L6	

< RESISTOR >

Ref.No.	Part No.	Description	Remark
R4	1-216-819-11	METAL CHIP 680 5% 1/16W	
R5	1-216-807-11	METAL CHIP 68 5% 1/16W	
R6	1-216-809-11	METAL CHIP 100 5% 1/16W	
R7	1-216-825-11	METAL CHIP 2.2K 5% 1/16W	
R8	1-216-833-11	METAL CHIP 10K 5% 1/16W	
R9	1-216-833-11	METAL CHIP 10K 5% 1/16W	
R10	1-216-829-11	METAL CHIP 4.7K 5% 1/16W	
R11	1-216-850-11	METAL CHIP 270K 5% 1/16W	
R12	1-216-821-11	METAL CHIP 1K 5% 1/16W	
R13	1-216-797-11	METAL CHIP 10 5% 1/16W	
R14	1-216-825-11	METAL CHIP 2.2K 5% 1/16W	
R15	1-216-825-11	METAL CHIP 2.2K 5% 1/16W	
R16	1-216-797-11	METAL CHIP 10 5% 1/16W	
R17	1-216-797-11	METAL CHIP 10 5% 1/16W	
R18	1-216-797-11	METAL CHIP 10 5% 1/16W	
R19	1-216-814-11	METAL CHIP 270 5% 1/16W	
R20	1-216-797-11	METAL CHIP 10 5% 1/16W	
R21	1-216-819-11	METAL CHIP 680 5% 1/16W	
R22	1-216-850-11	METAL CHIP 270K 5% 1/16W	
R23	1-216-841-11	METAL CHIP 47K 5% 1/16W	
R24	1-216-837-11	METAL CHIP 22K 5% 1/16W	
R25	1-216-797-11	METAL CHIP 10 5% 1/16W	

www.manualscenter.com

Ref.No.	Part No.	Description			Remark
R26	1-216-838-11	METAL CHIP	27K	5%	1/16W
R27	1-216-853-11	METAL CHIP	470K	5%	1/16W
R28	1-216-833-11	METAL CHIP	10K	5%	1/16W
R29	1-216-833-11	METAL CHIP	10K	5%	1/16W
R30	1-216-833-11	METAL CHIP	10K	5%	1/16W
R31	1-216-845-11	METAL CHIP	100K	5%	1/16W
R32	1-216-833-11	METAL CHIP	10K	5%	1/16W
R33	1-216-845-11	METAL CHIP	100K	5%	1/16W
R34	1-216-841-11	METAL CHIP	47K	5%	1/16W
R35	1-216-840-11	METAL CHIP	39K	5%	1/16W
R36	1-216-829-11	METAL CHIP	4.7K	5%	1/16W
R37	1-216-821-11	METAL CHIP	1K	5%	1/16W
R38	1-216-845-11	METAL CHIP	100K	5%	1/16W
R39	1-216-797-11	METAL CHIP	10	5%	1/16W
R40	1-216-845-11	METAL CHIP	100K	5%	1/16W
R41	1-216-833-11	METAL CHIP	10K	5%	1/16W
R42	1-216-845-11	METAL CHIP	100K	5%	1/16W
R43	1-216-809-11	METAL CHIP	100	5%	1/16W
R44	1-216-829-11	METAL CHIP	4.7K	5%	1/16W
R45	1-216-825-11	METAL CHIP	2.2K	5%	1/16W
R47	1-216-813-11	METAL CHIP	220	5%	1/16W
R101	1-216-797-11	METAL CHIP	10	5%	1/16W
R102	1-216-842-11	METAL CHIP	56K	5%	1/16W
R103	1-216-805-11	METAL CHIP	47	5%	1/16W
R104	1-216-797-11	METAL CHIP	10	5%	1/16W
R105	1-216-842-11	METAL CHIP	56K	5%	1/16W
R106	1-216-797-11	METAL CHIP	10	5%	1/16W
R107	1-216-814-11	METAL CHIP	270	5%	1/16W
R108	1-216-837-11	METAL CHIP	22K	5%	1/16W
R109	1-216-837-11	METAL CHIP	22K	5%	1/16W
R110	1-216-845-11	METAL CHIP	100K	5%	1/16W
R111	1-216-833-11	METAL CHIP	10K	5%	1/16W
R112	1-216-833-11	METAL CHIP	10K	5%	1/16W
R113	1-216-845-11	METAL CHIP	100K	5%	1/16W
R114	1-216-821-11	METAL CHIP	1K	5%	1/16W
R115	1-216-829-11	METAL CHIP	4.7K	5%	1/16W
R116	1-216-831-11	METAL CHIP	6.8K	5%	1/16W
R117	1-216-831-11	METAL CHIP	6.8K	5%	1/16W
R118	1-216-833-11	METAL CHIP	10K	5%	1/16W
R119	1-218-293-11	METAL CHIP	24K	5%	1/16W
R120	1-216-840-11	METAL CHIP	39K	5%	1/16W
R121	1-216-797-11	METAL CHIP	10	5%	1/16W
R122	1-216-841-11	METAL CHIP	47K	5%	1/16W
R123	1-216-845-11	METAL CHIP	100K	5%	1/16W
R124	1-216-833-11	METAL CHIP	10K	5%	1/16W
R125	1-216-797-11	METAL CHIP	10	5%	1/16W
R126	1-216-809-11	METAL CHIP	100	5%	1/16W
R127	1-216-809-11	METAL CHIP	100	5%	1/16W

Ref.No.	Part No.	Description			Remark
R128	1-216-830-11	METAL CHIP	5.6K	5%	1/16W
R129	1-216-827-11	METAL CHIP	3.3K	5%	1/16W
R130	1-216-827-11	METAL CHIP	3.3K	5%	1/16W
R131	1-216-827-11	METAL CHIP	3.3K	5%	1/16W
R132	1-216-843-11	METAL CHIP	68K	5%	1/16W
R133	1-216-839-11	METAL CHIP	33K	5%	1/16W
R134	1-216-839-11	METAL CHIP	33K	5%	1/16W
R135	1-216-843-11	METAL CHIP	68K	5%	1/16W
R136	1-216-839-11	METAL CHIP	33K	5%	1/16W
R137	1-216-839-11	METAL CHIP	33K	5%	1/16W
R138	1-216-839-11	METAL CHIP	33K	5%	1/16W
R139	1-216-843-11	METAL CHIP	68K	5%	1/16W
R140	1-216-843-11	METAL CHIP	68K	5%	1/16W
R141	1-216-843-11	METAL CHIP	68K	5%	1/16W
R142	1-216-843-11	METAL CHIP	68K	5%	1/16W
R143	1-216-843-11	METAL CHIP	68K	5%	1/16W
R144	1-216-827-11	METAL CHIP	3.3K	5%	1/16W
R145	1-216-845-11	METAL CHIP	100K	5%	1/16W
R146	1-216-845-11	METAL CHIP	100K	5%	1/16W
R147	1-216-827-11	METAL CHIP	3.3K	5%	1/16W
R148	1-216-827-11	METAL CHIP	3.3K	5%	1/16W
R149	1-216-827-11	METAL CHIP	3.3K	5%	1/16W
R150	1-216-827-11	METAL CHIP	3.3K	5%	1/16W
R151	1-216-827-11	METAL CHIP	3.3K	5%	1/16W
R152	1-216-827-11	METAL CHIP	3.3K	5%	1/16W
R153	1-216-827-11	METAL CHIP	3.3K	5%	1/16W
R154	1-216-825-11	METAL CHIP	2.2K	5%	1/16W
R155	1-216-838-11	METAL CHIP	27K	5%	1/16W
R156	1-216-831-11	METAL CHIP	6.8K	5%	1/16W
R157	1-216-839-11	METAL CHIP	33K	5%	1/16W
R158	1-216-845-11	METAL CHIP	100K	5%	1/16W
R159	1-216-803-11	METAL CHIP	33	5%	1/16W
R160	1-216-803-11	METAL CHIP	33	5%	1/16W
R161	1-216-837-11	METAL CHIP	22K	5%	1/16W
R162	1-216-850-11	METAL CHIP	270K	5%	1/16W
R163	1-216-829-11	METAL CHIP	4.7K	5%	1/16W
R164	1-216-835-11	METAL CHIP	15K	5%	1/16W
R201	1-216-814-11	METAL CHIP	270	5%	1/16W
R202	1-216-837-11	METAL CHIP	22K	5%	1/16W
R203	1-216-825-11	METAL CHIP	2.2K	5%	1/16W
R204	1-216-845-11	METAL CHIP	100K	5%	1/16W
R205	1-216-825-11	METAL CHIP	2.2K	5%	1/16W
R206	1-216-833-11	METAL CHIP	10K	5%	1/16W
R207	1-216-827-11	METAL CHIP	3.3K	5%	1/16W
R208	1-216-797-11	METAL CHIP	10	5%	1/16W
R209	1-216-832-11	METAL CHIP	8.2K	5%	1/16W
R210	1-216-819-11	METAL CHIP	680	5%	1/16W
R211	1-216-849-11	METAL CHIP	220K	5%	1/16W
R212	1-216-797-11	METAL CHIP	10	5%	1/16W

SIGNAL

Ref.No.	Part No.	Description			Remark
R213	1-216-849-11	METAL CHIP	220K	5%	1/16W
R214	1-216-825-11	METAL CHIP	2.2K	5%	1/16W
R215	1-216-831-11	METAL CHIP	6.8K	5%	1/16W
R216	1-216-838-11	METAL CHIP	27K	5%	1/16W
R217	1-216-809-11	METAL CHIP	100	5%	1/16W
R218	1-216-841-11	METAL CHIP	47K	5%	1/16W
R219	1-216-851-11	METAL CHIP	330K	5%	1/16W
R220	1-216-833-11	METAL CHIP	10K	5%	1/16W
R221	1-216-821-11	METAL CHIP	1K	5%	1/16W
R222	1-216-839-11	METAL CHIP	33K	5%	1/16W
R301	1-216-829-11	METAL CHIP	4.7K	5%	1/16W
R302	1-216-833-11	METAL CHIP	10K	5%	1/16W
R303	1-216-837-11	METAL CHIP	22K	5%	1/16W
R304	1-216-833-11	METAL CHIP	10K	5%	1/16W
R305	1-216-833-11	METAL CHIP	10K	5%	1/16W
R306	1-216-809-11	METAL CHIP	100	5%	1/16W
R307	1-216-840-11	METAL CHIP	39K	5%	1/16W
R308	1-216-845-11	METAL CHIP	100K	5%	1/16W
R309	1-216-797-11	METAL CHIP	10	5%	1/16W
R310	1-216-851-11	METAL CHIP	330K	5%	1/16W
R311	1-216-818-11	METAL CHIP	560	5%	1/16W
R312	1-216-803-11	METAL CHIP	33	5%	1/16W
R313	1-216-851-11	METAL CHIP	330K	5%	1/16W
R314	1-216-818-11	METAL CHIP	560	5%	1/16W
R315	1-216-803-11	METAL CHIP	33	5%	1/16W
R316	1-216-805-11	METAL CHIP	47	5%	1/16W
R317	1-216-829-11	METAL CHIP	4.7K	5%	1/16W
R318	1-216-825-11	METAL CHIP	2.2K	5%	1/16W
R319	1-216-833-11	METAL CHIP	10K	5%	1/16W
R320	1-216-831-11	METAL CHIP	6.8K	5%	1/16W
R321	1-216-837-11	METAL CHIP	22K	5%	1/16W
R322	1-216-823-11	METAL CHIP	1.5K	5%	1/16W
R323	1-216-833-11	METAL CHIP	10K	5%	1/16W
R324	1-216-805-11	METAL CHIP	47	5%	1/16W
R325	1-216-809-11	METAL CHIP	100	5%	1/16W
R326	1-216-809-11	METAL CHIP	100	5%	1/16W
R327	1-216-805-11	METAL CHIP	47	5%	1/16W
R328	1-216-845-11	METAL CHIP	100K	5%	1/16W
R329	1-216-831-11	METAL CHIP	6.8K	5%	1/16W
R330	1-216-829-11	METAL CHIP	4.7K	5%	1/16W
R332	1-216-845-11	METAL CHIP	100K	5%	1/16W
R333	1-216-821-11	METAL CHIP	1K	5%	1/16W
R334	1-216-821-11	METAL CHIP	1K	5%	1/16W
R401	1-216-845-11	METAL CHIP	100K	5%	1/16W
R402	1-216-845-11	METAL CHIP	100K	5%	1/16W
R403	1-216-843-11	METAL CHIP	68K	5%	1/16W
R404	1-216-821-11	METAL CHIP	1K	5%	1/16W
R406	1-216-797-11	METAL CHIP	10	5%	1/16W
R407	1-216-845-11	METAL CHIP	100K	5%	1/16W
R408	1-216-821-11	METAL CHIP	1K	5%	1/16W
R409	1-216-840-11	METAL CHIP	39K	5%	1/16W
R410	1-216-845-11	METAL CHIP	100K	5%	1/16W
R411	1-216-833-11	METAL CHIP	10K	5%	1/16W
R412	1-216-833-11	METAL CHIP	10K	5%	1/16W

< VARIABLE RESISTOR >

RV201	1-241-597-11	RES, ADJ, CARBON 100K
RV202	1-223-587-11	RES, ADJ, CARBON 22K
RV301	1-223-587-11	RES, ADJ, CARBON 22K
RV302	1-223-573-11	RES, VAR, CARBON 50K (VOL ◢)

< SWITCH >

S1	1-571-674-11	SWITCH, SLIDE (SENS DX/LOCAL)
S301	1-571-275-11	SWITCH, SLIDE (AM TONE/FM MODE)
S302	1-572-938-21	SWITCH, TACTIL (RESET)

< TRANSFORMER >

T1	1-423-981-11	TRANSFORMER, HIGH FREQUENCY (AM MIX)
T2	1-403-633-11	TRANSFORMER, IF (AM 1ST IF)
T3	1-403-634-11	TRANSFORMER, IF (AM 1ST IF)
T4	1-423-983-11	TRANSFORMER, HIGH FREQUENCY (MW/LW RF)
T5	1-403-636-11	COIL (WITH CORE) (FM RF)
T6	1-403-637-11	COIL (WITH CORE) (FM RF)
T101	1-403-629-11	COIL (WITH CORE) (AM 1ST OSC)
T201	1-403-638-11	COIL (WITH CORE) (FM OSC)
T202	1-403-632-11	COIL (WITH CORE) (AM OSC)
T203	1-403-631-11	TRANSFORMER, IF (AM IF)
T204	1-403-630-11	COIL (WITH CORE) (AM OSC)
T401	1-449-021-21	COIL, DC/DC/ CONVERTER

< VIBRATOR >

X101	1-579-744-21	VIBRATOR, CRYSTAL (75kHz)
X201	1-760-200-11	VIBRATOR, CERAMIC (3.640 MHz)
X202	1-760-197-11	VIBRATOR, CRYSTAL (55.390 MHz)

< FILTER >

XF1	1-760-198-11	FILTER, CRYSTAL

****

MISCELLANEOUS
****

19	1-651-257-11	PC BOARD, FLEXIBLE (KEY)
28	1-651-256-11	PC BOARD, FLEXIBLE (SIGNAL)
58	1-559-706-11	CORD (WITH PLUG)
ANT1	1-501-658-11	ANTENNA, TELESCOPIC
ANT2	1-501-658-11	ANTENNA, TELESCOPIC
SP601	1-504-493-11	SPEAKER (4CM)

www.manualscenter.com

Ref.No.	Part No.	Description	Remark
		ACCESSORIES & PACKING MATERIALS **********	
	1-467-543-11	ADAPTOR, AC (AC-E311) (SW100S:G, IT, E, EA)	
	1-467-543-21	ADAPTOR, AC (AC-E312) (S100WS:US)	
	1-467-543-31	ADAPTOR, AC (AC-E313) (SW100S:JE)	
	1-467-543-41	ADAPTOR, AC (AC-E314) (SW100S:CND)	
	1-569-007-11	ADAPTER, CONVERSION 2P (SW100S:JE)	
	1-569-008-11	ADAPTER, CONVERSION 2P (SW100S:G, IT, FR, E, EA)	
	1-573-856-11	ADAPTOR, CHANGE (SW100S:CND)	
	3-757-853-01	MANUAL, INSTRUCTION (SW100S:EA, JE, /SW100E:EA) (JAPANESE, ENGLISH, KOREAN, ARABIC)	
	3-757-853-41	MANUAL, INSTRUCTION (SW100S:US, FR, E/SW100E:FR, E) (ENGLISH, FRENCH, SPANISH, SWEDISH, PORTGUESE)	
	3-757-853-51	MANUAL, INSTRUCTION (SW100S:CND, G, IT/SW100E:G, UK, AUS) (ENGLISH, FRENCH, GERMAN, DUTCH, ITALIAN)	
	3-893-802-10	BOOK, GUIDE, WAVE	
	3-899-567-01	PLATE (ASSY), ABSORPTION	
	3-910-057-01	CASE, CARRYING	
	3-910-059-01	INDIVIDUAL CARTON (SW100S)	
	3-910-065-01	INDIVIDUAL CARTON (SW100E)	
	3-912-505-01	LIST, FREQUENCY	
	8-953-314-95	HEADPHONE MDR-E757/BK SET	
	X-3321-270-1	ATTACHMENT	
	A-3604-167-A	AN-71 (SW100E)	
	3-895-517-11	SCREW (2), TAPPING, STEP (SW100E)	

www.manualscenter.com

English
94A18105-1
Printed in Japan
©1994.1

9-959-320-11

Sony Corporation
Personal Telecommunications Group