clarion

Clarion (Taiwan) Manufacturing Co., Ltd.
Export Division-5F., Building F, No.69-8, Sec.2, Chung Tsun East Road, Tamsui, Taipei Shien, Taiwan, R.O.C.
Tel:02-2809-1333 Fax:02-2808-3348
Clarion Co., Ltd.
Export Division-22-3, Shibuya 2-chome, Shibuyaku, Tokyo, 150-8335 Japan Tel:03-3400-1121

Published by Service Dept.
298-5795-00 MAR.2000 P
Printed in Taiwan R.O.C.

Service Manual

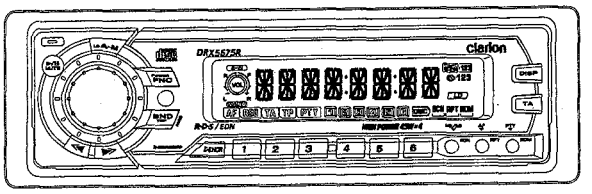

RDS-EON FM/MW/LW Radio CD Combination With CD Changer Control

Model ***DRX5675R***

(PE-2315E)

■ SPECIFICATIONS

Radio section

Tuning system:	PLL synthesizer tuner
Receiving frequencies:	FM 87.5MHz to 108MHz (0.05MHz steps) MW 531kHz to 1602kHz (9kHz steps) LW 153kHz to 279kHz (3kHz steps)

CD Player section

System:	Compact disc digital audio system
Frequency response:	5Hz to 20kHz(±1dB)
Signal to noise ratio:	100dB(1kHz) IHF-A
Dynamic range:	95dB(1kHz)
Distortion:	0.01%

General

Max. power output:	4×45W(EIAJ)
Power supply voltage:	14V DC(10.8 to 15.6V allowable),negative ground
Power consumption:	Less than 15A
Speaker impedance:	4Ω(4Ω to 8Ω allowable)
Auto antenna rated current:	500mA or less
Weight:	Main unit 1.7kg
Dimensions(mm):	Main unit 178(W)×50(H)×155(D)

※Specifications and design are subject to change without notice for further improvement.

■ NOTE

※We cannot supply PWB with component parts in principle. When a circuit on PWB has failure, please repair it by component parts base. Parts which are not mentioned in service manual are not supplied.

■ COMPONENTS

PE-2315E-A

Main unit	————	1
Mounting bracket	300-7742-00	1
DCP case	335-5734-30	1
ESCUTCHEON(OUT-ES)	370-5879-00	1
Parts bag	————	
Removal key	331-2497-00	2
Cord clamp	335-0837-07	1
Rubber cap	345-3653-20	1
Screw	716-0726-01	1
A-lead(for cellular phone)	850-6681-50	1

■ FEATURES

1. RDS-Pro Receiver with Controller for MD or CD Changer (6/12 disc)
2. CD-Deck with 1-Bit D/A Converter and 8-Times Oversampling
3. Fully Detachable Flip Down Control Panel With Large Multi-Colour LC-Display
6. High Power 4×45W Max./4-Channel RCA Line Level Output

■ To engineers in charge of repair or inspection of our products.

Before repair or inspection, make sure to follow the instructions so that customers and Engineers in charge of repair or inspection can avoid suffering any risk or injury.

1.Use specified parts.
The system uses parts with special safety features against fire and voltage. Use only parts with equivalent characteristics when replacing them.
The use of unspecified parts shall be regarded as remodeling for which we shall not be liable. The onus of product liability(PL) shall not be our responsibility in cases where an accident or failure is as a result of unspecified parts being used.

2.Place the parts and wiring back in their original positions after replacement or re-wiring.
For proper circuit construction, use of insulationtubes, bonding, gaps to PWB, etc, is involved. The wiring connection and routing to the PWB are specially planned using clamps to keep away from heated and high voltage parts. Ensure that they are placed back in their original positions after repair or inspection.
If extended damage is caused due to negligence during repair, the legal responsibility shall be with the repairing company.

3.Check for safety after repair.
Check that the screws, parts and wires are put back securely in their original position after repair. Ensure for safety reasons there is no possibility of second ary problems around the repaired spots.
If extended damage is caused due to negligence of repair, the legal responsibility shall be with the repair ing company.

4.Caution in removal and making wiring connection to the parts for the automobile.
Disconnect the battery terminal after turning the ignition key off. If wrong wiring connections are made with the battery connected, a short circuit and/or fire may occur.
If extensive damage is caused due to negligence of repair, the legal responsibility shall be with the repair ing company.

5.Cautions regarding chips.
Do not reuse removed chips even when no abnormality is observed in their appearance. Always replace them with new ones. (The chip parts include resistors, capacitors, diodes, transistors, etc). The negative pole of tantalum capacitors is highly susceptible to heat, so use special care when replacing them and check the operation afterwards.

6.Cautions in handing flexible PWB
Before working with a soldering iron, make sure that the iron tip temperature is around 270°C. Take care not to applthe iron tip repeatedly (more than three times) to the say me patterns. Also take care not to apply the tip with force.

7.Turn the unit OFF during disassembly and parts replacement. Recheck all work before you apply power to the unit.

8.Cautions in checking that the optical pickup lights up.
The laser is focused on the disc reflection surface through the lens of the optical pickup. When checking that the laser optical diode lights up, keep your eyes more than 30cms away from the lens. Prolonged viewing of the laser within 30cms may damage your eyesight.

9.Cautions in handing the optical pickup
The laser diode of the optical pickup can be damaged by electrostatic charge caused by your clothes and body.
Make sure to avoid electrostatic charges on your clothes or body, or discharge static electricity before handling the optical pickup.

9-1.Laser diode
The laser diode terminals are shorted for transportation in order to prevent electrostatic damage. After replacement, open the shorted circuit. When removing the pickup from the mechanism, short the terminals by soldering them to prevent this damage.

9-2.Actuator
The actuator has a powerful magnetic circuit. If a magnetic material is put close to it, its characteristics will change. Ensure that no foreign substances enter through the ventilation slots in the cover.

9-3.Cleaning the lens
Dust on the optical lens affects performance. To clean the lens, apply a small amount of isopropolalcohol to lens paper and wipe the lens gently.

■ CAUTIONS

This appliance contains a laser system and is classified as a "CLASS 1 LASER PRODUST". To use this model properly, read this Owner's Manual carefully and keep this manual for your future reference. In case of any trouble with this player, please contact your nearest "AUTHORIZED service station". To prevent direct exposure to the laser beam, do not try to open the enclosure.

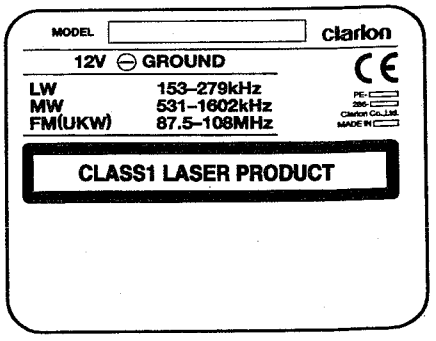

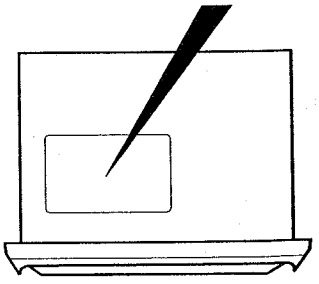

Bottom view of Main Unit

■ NOTES OF ISO CONNECTOR

1.For VW and Audi vehicles, change the position of fuse installation as shown on the diagram.(Figure 1)

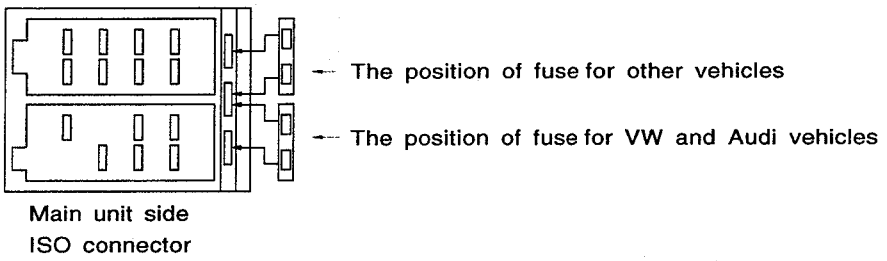

Figure 1

2.The lead include with the unit must be connected to the specified position of the vehicle's ISO connector in order to use the "triggered audio mute for cellular telephones" function.(Figure 2)

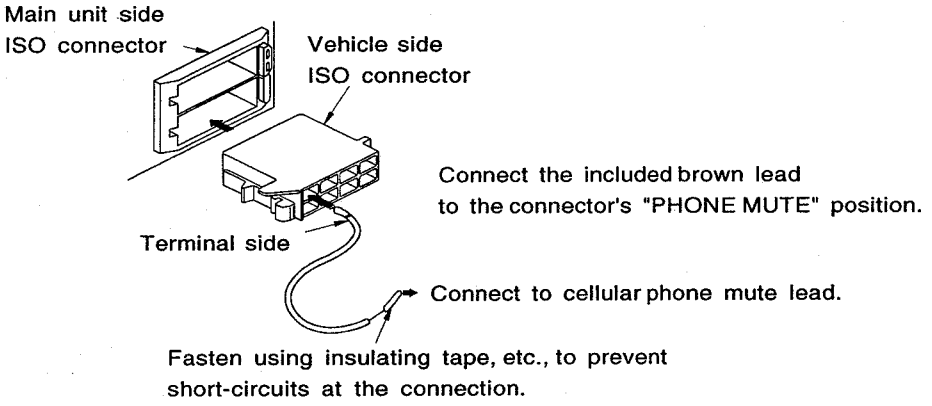

Figure 2

■ TROUBLESHOOTING

	Problem	Cause	Measure
General	Power dose not turn on. (No sound is produced.)	Fuse is blown.	Replace with a fuse of the same amperage as the old fuse.
		Incorrect wiring.	Consult your store of purchase.
	No sound output when operating the unit with amplifiers or power antenna attached.	Power antenna lead is shorted to ground or excessive current is required for remote-on the amplifiers or power antenna.	1.Turn the unit off. 2.Remove all wires attached to the power antenna lead. Check each wire for a possible short to ground using an ohm meter. 3.Turn the unit back on. 4.Reconnect each amplifier remote wire to the power antenna lead one by one. If the amplifiers turn off before all wires are attached, use an external relay to provide remote-on voltage (excessive current required).
	Nothing happens when buttons are pressed. Display is not accurate.	The microprocessor has malfunctioned due to noise, etc.	Turn off the power, then press the OPEN button and remove the DCP. Press the reset button for about 2 seconds with a thin rod. 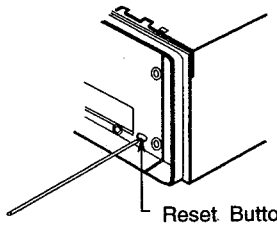
		DCP or main unit connectors are dirty.	Wipe the dirt off with a soft cloth moistened with cleaning alcohol.
CD	Compact disc cannot be loaded.	Another compact disc is already loaded.	Eject the compact disc before loading the new one.
	Sund skips or is noisy.	Compact disc is dirty.	Clean the compact disc with a soft cloth.
		Compact disc is heavily scratched or warped.	Replace with a compact disc with on scratches.
	Sound is bad directly after power is turned on.	Water droplets may form on the internal lens when the car is parked in a humid place.	Let dry for about 1 hour with the power on.

■ ERROR DISPLAYS

If an error occurs, one of the following displays is displayed.
Take the measures described below to eliminate the problem.

	Error Display	Cause	Measure
CD	ERROR 2	A CD is caught inside the CD deck and is not ejected.	This is a failure of CD deck's mechanism and consIt your store of purchase.
	ERROR 3	A CD cannot be played due to scratches, etc.	Replace with a non-scratched, non-qarped disc.
	ERROR 6	A CD is loaded upside-down inside the CD deck and does not play.	Eject the disc then reload it properly.
CD changer	ERROR 2	A CD inside the CD changer is not loaded.	This is a failure of CD changer's mechanism and consult your store of purchase.
	ERROR 3	A CD inside the CD changer cannot be played due to scratches, etc.	Replace with a non-scratched, non-warped disc.
	ERROR 6	A CD inside the CD changer cannot be played because it is loaded upside-down.	Eject the disc then reload it properly.

If an error display other than the ones described above appears, press the reset button. If the problem persists, turn off the power and consult your store of purchase.

■ ADJUSTMENT

Item	Procedure	Measuring instrument
S-meter	1.Input the 98.1MHz/30dB μ (400Hz-MOD 30%)signal. 2.Turn on the power switch. And press the AF button and CH6 button at the same time.(TEST MODE) 3.Adjust the reading of LCD indicator to [30----00] (3.0V±0.2V)by VR1.	SG

Adjustment point

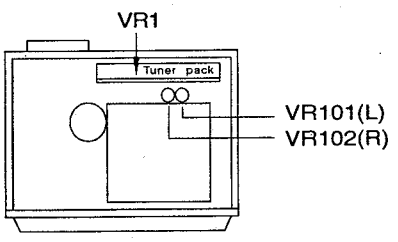

Top side of main unit

■BLOCK DIAGRAM

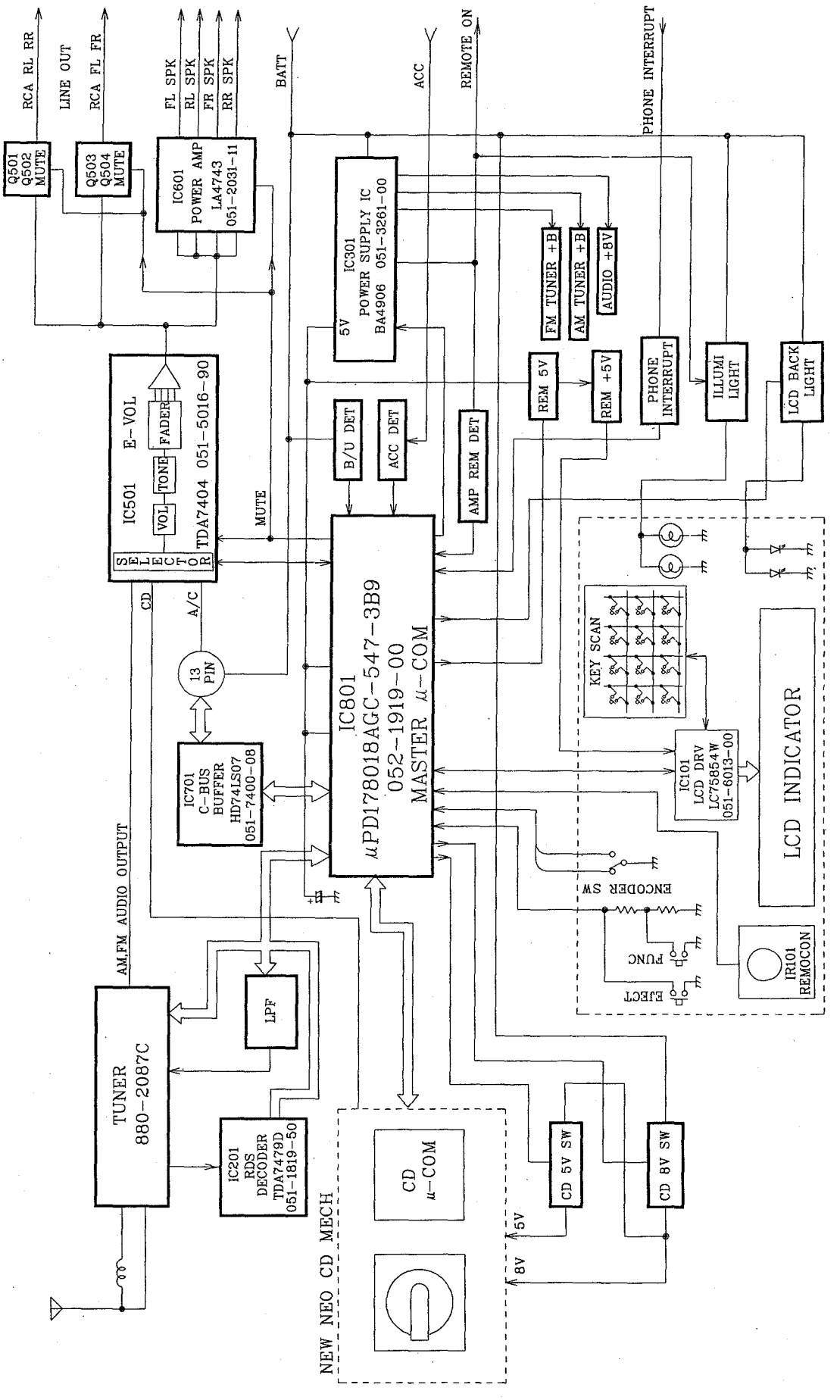

■ EXPLANATION OF IC:

■ μ PD178018AGC-547-3B9 Q52-1919-00 MASTER MICRO COMPUTER

1.Outward Form : 80 pins QFP
2.Terminal Description

pin 1 : KEY_A/D : I : FUNC/EJECT/DCP detection terminal for A/D converter
pin 2 : RDS S_METER : I : RDS S_METER detection terminal for A/D converter
pin 3 : RDS_NOISE : I : RDS NOISE detection terminal for A/D converter
pin 4 : VOL CW : I : Use for rolling volume
pin 5 : VOL CCW : I : Use for rolling volume
pin 6 : NOISE_DISCHG : O : Noise is off
pin 7 : LCD_SI : I : Serial data communication line to LCD Control IC
pin 8 : LCD_SO : O : Serial data communication line to LCD Control IC
pin 9 : LCD_SCK : O : Serial data communication line to LCD Control IC
pin 10 : LCD_CE : O : Serial data communication line to LCD Control IC
pin 11 : C-BUS SRQ : I : "C-BUS" Serial data communication line
pin 12 : C-BUS_SI : I : "C-BUS" Serial data communication line
pin 13 : C-BUS_SO : O : "C-BUS" Serial data communication line
pin 14 : C-BUS_SCK : O : "C-BUS" Serial data communication line
pin 15 : B/L + B : O : NC
pin 16 : SYS_MUTE : O : Output mute. While it is "LOW", mute is "ON"
pin 17 : REM + 5 : O : REM 5V power supply control terminal
pin 18 : STAND BY : O : Power supply IC control terminal
pin 19 : E_VOL CLK : O : E_VOL use
pin 20 : E_VOL DATA : O : E_VOL use
pin 21 : GND : — : GND
pin 22 : VDD : — : VDD
pin 23 : MODE1 FM/AM : O : While "HI"=FM and "LO"=AM, power supply is "ON"
pin 24 : MODE2 ANT : O : While "HI"=ANT, power supply is "ON"
pin 25 : MUTE SPEED : O : During RDS follow-up motion, mute speed at "LO"; usually it is at "HI"
pin 26 : IF_REQ : O : During seeking, it is at "HI"; while detecting RDS SD, it is at "LO"
pin 27 : ST : O : Usually input "ST" lights at "LO"; always at "HI" during seeking
pin 28 : AM IF CNT : I : AM IF counter
pin 29 : FM IF CNT : I : FM IF counter
pin 30 : VDD : — : VDD
pin 31 : FM OSC : I : FM VCO input terminal
pin 32 : AM OSC : I : AM VCO input terminal
pin 33 : GND : — : GND
pin 34 : FM EO : O : FM PLL VT
pin 35 : AM EO : O : AM PLL VT
pin 36 : GND : — : GND
pin 37 : NC : I : GND
pin 38 : NC : I : GND
pin 39 : SD/ST_IND : I : While AM/FM SD IN/FM ST is "0", "ST" lights
pin 40 : RDS MUTE : O : During RDS follow-up motion, mute is at "HI"; usually it is at "LO"
pin 41 : AM_DX/LO : O : AM DX/LO output terminal, LOCAL is at "HI"
pin 42 : AMP REM_DET : I : While protecting circuit motion, it is at "HI"
pin 43 : SLAVE ON : I : NC
pin 44 : MASTER_ON : O : NC
pin 45 : NC : O : NC
pin 46 : FM_DX/LO : O : FM DX/LO output terminal, LOCAL is at "HI"
pin 47 : CD_8V REM : O : CD power supply control terminal + 8V
pin 48 : CD_5V REM : O : CD power supply control terminal + 5V
pin 49 : PHONE AUDIO : I : Connected to GND
pin 50 : NC : I : NC
pin 51 : CW : O : Mechanical photo snesor input terminal. Terminal to detect the disc position in loading status, chucking status and other machine status. With disc, "H" is input. Without disc, "L" is input.
pin 52 : CCW : O : Mechanical photo snesor input terminal. Terminal to detect the disc position in loading status, chucking status and other machine status. With disc, "H" is input. Without disc, "L" is input.
pin 53 : TR_C : I : Mechanical photo snesor input terminal. Terminal to detect the disc position in loading status, chucking status and other machine status. With disc, "H" is input. Without disc, "L" is input.
pin 54 : TR_B : I : Mechanical photo snesor input terminal. Terminal to detect the disc position in loading status, chucking status and other machine status. With disc, "H" is input. Without disc, "L" is input.
pin 55 : TR_A : I : Mechanical photo snesor input terminal. Terminal to detect the disc position in loading status, chucking status and other machine status. With disc, "H" is input. Without disc, "L" is input.
pin 56 : CHU_SW : I : Mechanical photo snesor input terminal. Terminal to detect the disc position in loading status, chucking status and other machine status. With disc, "H" is input. Without disc, "L" is input.
pin 57 : NC : I : NC
pin 58 : CD_RESET : O : CD MECH connects to RESET
pin 59 : CCE : O : CD MECH chip enable
pin 60 : BUCK : O : CD MECH data bus clock
pin 61 : BUS_3 : I/O : CD MECH data bus
pin 62 : BUS_2 : I/O : CD MECH data bus
pin 63 : BUS_1 : I/O : CD MECH data bus
pin 64 : BUS_0 : I/O : CD MECH data bus
pin 65 : L/M : O : LW="HI", MW="LO"
pin 66 : RDS_DATA : I : RDS data input terminal
pin 67 : RDS_CLK : I : RDS clock input terminal
pin 68 : B/U_DET : I : B/U detecting terminal
pin 69 : ACC_IN : I : ACC detecting terminal
pin 70 : REMOCON : I : Remote control
pin 71 : KEY_INT : I : To 1 pin
pin 72 : SBSY : I : Connected to CD MECH
pin 73 : PHONE_INT : I : Phone interrupted
pin 74 : CPU REG : — : 0.047 μ F to GND
pin 75 : GND : — : GND
pin 76 : XOUT : — : X-TAL 4.5MHz
pin 77 : XIN : — : X-TAL 4.5MHz
pin 78 : OSC REG : — : 0.047 μ F to GND
pin 79 : VDD : — : VDD
pin 80 : RESET : I : System reset with 22K to 68 pin

CD MECH : LOADING MOTOR CONTROL

PIN No	NAME	LOADING	EJECT	BREAK	STOP
51	MCW	H	L	H	L
52	MCCW	L	H	H	L

■ EXPLODED VIEW · PARTS LIST:

DCP Section

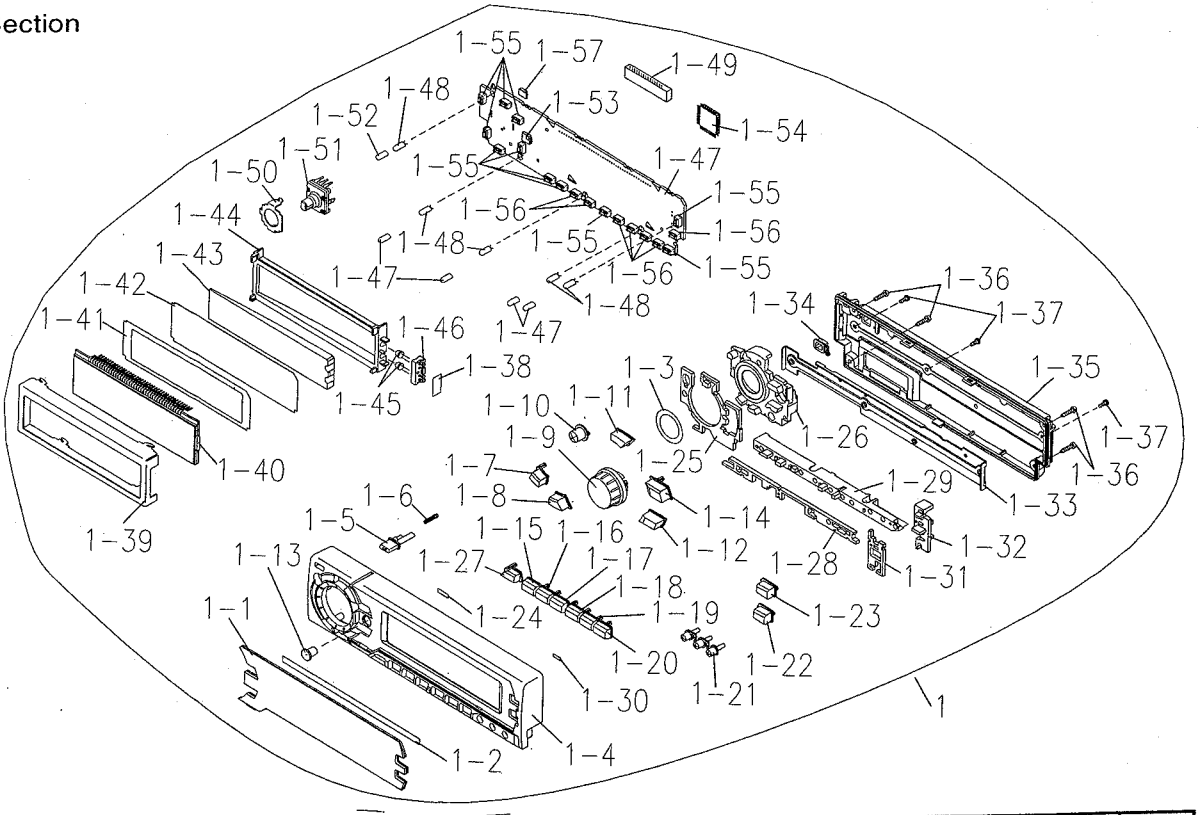

NO.	PARTS NO.	DESCRIPTION	Q'TY
1	DCP-180-700	DCP ASSY	1
1-1	373-0922-00	DIAL-CVR	1
1-2	347-6205-00	DOUBLE FACE	1
1-3	347-6206-00	SHADE	1
1-4	370-5855-00	ESCUTCHEON	1
1-5	382-5664-00	BUTTON	1
1-6	750-3404-00	SPRING	1
1-7	382-5650-00	BUTTON	1
1-8	382-5649-00	BUTTON	1
1-9	380-5467-01	KNOB	1
1-10	382-5651-00	BUTTON	1
1-11	382-5652-00	BUTTON	1
1-12	382-5648-00	BUTTON	1
1-13	335-5828-00	IR-FILTER	1
1-14	382-5647-00	BUTTON	1
1-15	382-5654-00	BUTTON	1
1-16	382-5655-00	BUTTON	1
1-17	382-5656-00	BUTTON	1
1-18	382-5657-00	BUTTON	1
1-19	382-5658-00	BUTTON	1
1-20	382-5659-00	BUTTON	1
1-21	382-5663-00	BUTTON	1
1-22	382-5660-01	BUTTON	1
1-23	382-5661-00	BUTTON	1
1-24	347-6193-00	SHADE	1
1-25	345-8406-00	SPONGE(L)	1
1-26	335-6206-00	ILLUMI PART(L)	1
1-27	382-5653-00	BUTTON	1
1-28	345-8405-00	SPONGE	1
1-29	335-6205-00	ILLUMI PART(M)	1

NO.	PARTS NO.	DESCRIPTION	Q'TY
1-30	347-6192-00	SHADE	1
1-31	345-8404-00	SPONGE(R)	1
1-32	335-6204-20	ILLUMI PART(R)	1
1-33	331-2524-00	REAR-CVR-PLATE	1
1-34	382-5141-00	BUTTON	1
1-35	335-5837-01	REAR-CVR	1
1-36	716-0872-12	PAD SCREW	4
1-37	738-2035-17	PRECISION SCREW	3
1-38	347-6191-00	SHADE	1
1-39	331-2807-00	LCD CVR	1
1-40	379-1177-41	INDICATOR	1
1-41	347-6172-00	FILM	1
1-42	347-6173-00	SHADE	1
1-43	335-6211-00	LCD ILLUMI	1
1-44	335-6207-00	LCD HOLDER	1
1-45	001-7046-00	DIODE	2
1-46	335-6215-00	LED HOLDER	1
1-47	039-1624-00	SWITCH PWB (WITHOUT COMPONENT)	1
1-48	017-0444-00	PILOTLAMP	5
1-49	076-0535-01	PLUG	1
1-50	331-2814-00	JOG-SW-HOLDER	1
1-51	016-9900-66	VR W/SHAFT	1
1-52	345-4441-37	LAMP CAP	5
1-53	060-4008-00	IR-RECEIVE	1
1-54	051-6013-00	IC	1
1-55	013-6305-50	TACT SWITCH	11
1-56	013-6001-50	SWITCH	7
1-57	013-6511-50	ILLUMI SWITCH	1

Main Section

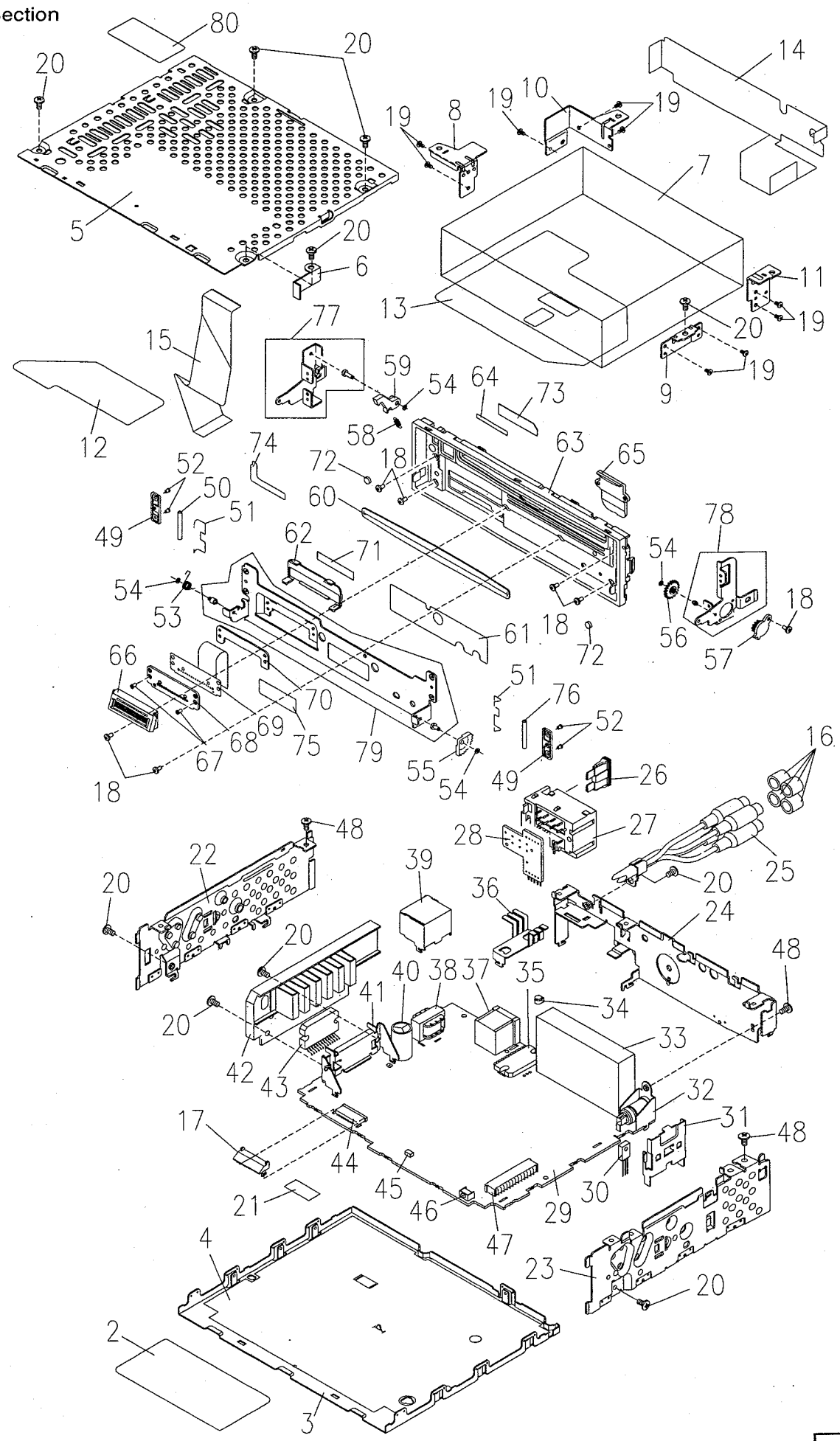

DRX5675R

NO.	PARTS NO.	DESCRIPTION	QTY
2	286-9336-00	SETPLATE	1
3	304-0460-00	LOWER-CVR	1
4	347-5918-00	INSULATOR	1
5	303-0472-00	UPPER-CVR	1
6	331-2744-00	STOPPER	1
7	929-0092-80	CD-MECH-MO	1
8	331-2491-00	CD-SUB-BRKT	1
9	331-2492-00	CD-SUB-BRKT	1
10	331-2493-00	CD-SUB-BRKT	1
11	331-2494-00	CD-SUB-BRKT	1
12	347-5416-00	INSULATOR	1
13	347-5916-02	INSULATOR	1
14	347-6201-00	INSULATOR	1
15	816-2391-00	FLATCABLE	1
16	345-3799-20	RUBBER CAP	4
17	335-6019-00	CN-CVR	1
18	780-2004-01	SCREW	7
19	716-0717-10	STEEL SCREW	9
20	731-3006-80	TAPTIGHT	10
21	347-6215-00	SPACER-FILM	1
22	305-0274-00	SIDE-CVR(L)	1
23	305-0275-00	SIDE-CVR(R)	1
24	307-0627-10	REAR-CVR	1
25	855-5428-50	RCA PIN CORD	1
26	060-0057-57	AUTO-FUSE(15A)	1
27	074-1115-00	OUTLET SOCKET	1
28	039-1400-30	ISO-PWB (WITHOUT COMPONENT)	1
29	039-1639-00	MAIN PWB (WITHOUT COMPONENT)	1
30	103-2012-00	TRANSISTOR	1
31	313-1651-20	HEAT SINK	1
32	092-9000-41	ANT RECEPT	1
33	880-2087C	TUNER	1
34	012-4738-13	VARIABLE-R	1
35	051-3261-00	IC	1
36	313-1772-00	HEAT SINK	1
37	074-1126-10	OUTLET SOCKET	1
38	009-9006-50	CHOKE	1
39	331-2820-00	SHIELD CASS	1
40	042-0447-00	SLUMI ELECTROLYTE-C	1
41	331-2255-20	IC-HOLDER	1

NO.	PARTS NO.	DESCRIPTION	QTY
42	313-1744-20	HEAT SINK	1
43	051-2031-11	IC	1
44	074-1198-68	OUTLET SOCKET	1
45	001-7011-96	DIODE	1
46	013-6100-00	SWITCH	1
47	074-0986-26	OUTLET SOCKET	1
48	714-3006-81	MACHINE SCREW	3
49	335-5821-01	SPING HOLDER	2
50	341-1704-20	ROLLER(LEFT)	1
51	750-3327-01	SPRING	2
52	738-1722-17	PRECISION SCREW	4
53	750-3342-00	SPRING	1
54	746-0761-00	WASHER	4
55	613-0684-00	FAN GEAR	1
56	613-0683-00	GEAR	1
57	613-0687-00	GEAR DAMPER	1
58	750-3341-00	SPRING	1
59	335-5820-00	HOOK	1
60	346-0114-01	LEATHER SHEET	1
61	290-7676-00	LABEL	1
62	335-5822-00	CN-CVR	1
63	370-5766-02	INNER-ES	1
64	347-5923-00	DOUBLE FACE	1
65	335-5817-00	ILLUMI PLATE	1
66	074-1145-02	OUTLET SOCKET	1
67	781-1735-00	SCREW	2
68	039-1306-00	DCP-PWB (WITHOUT COMPONENT)	1
69	039-1328-01	FPC (WITHOUT COMPONENT)	1
70	347-5935-00	SPACER	1
71	347-5919-00	SURGE PROTECTOR	1
72	345-8265-00	CUSHION	2
73	347-5920-00	COVER FILM	1
74	347-5941-00	HEAT-PROTECT	1
75	291-0078-00	STICKER	1
76	341-1710-00	R0LLER(RIGHT)	1
77	946-0071-01	ARM-L-ASSY	1
78	946-0072-01	ARM-R-ASSY	1
79	946-0070-00	HOLDER-ASSY	1
80	291-0083-00	STICKER	1

■ ELECTRICAL PARTS LIST:

Main PWB (B1) section

REF No.	PART No.	DESCRIPTION
IC 201	051-1819-50	TDA7479D
IC 202	051-0350-55	NJM4558M
IC 301	051-3261-00	BA4906
IC 501	051-5016-90	TDA7404
IC 601	051-2031-11	LA4743
IC 701	051-7400-08	HD74LS07FP
IC 801	052-1919-00	μPD178018AGC
Q 101	108-0669-00	2SK669
Q 102	102-2712-51	2SC2712GL
Q 103	102-2712-51	2SC2712GL
Q 104	102-2712-51	2SC2712GL
Q 105	103-1306-00	2SD1306
Q 107	125-0002-03	RN2403
Q 108	125-2004-02	RN1402
Q 201	125-0002-02	RN2402
Q 204	125-2004-02	RN1402
Q 205	125-2004-02	RN1402
Q 301	102-2712-51	2SC2712GL
Q 303	102-2712-51	2SC2712GL
Q 304	102-2712-51	2SC2712GL
Q 305	101-1237-00	2SB1237
Q 306	125-0002-02	RN2402
Q 307	125-0002-02	RN2402
Q 401	103-1858-00	2SD1858
Q 402	125-0002-02	RN2402
Q 403	125-2004-06	RN1406
Q 404	125-2004-06	RN1406
Q 405	101-1243-00	2SB1243
Q 406	103-2012-00	2SD2012
Q 407	103-1858-00	2SD1858
Q 408	125-2004-02	RN1402
Q 501	103-1306-00	2SD1306
Q 502	103-1306-00	2SD1306
Q 503	103-1306-00	2SD1306
Q 504	103-1306-00	2SD1306
Q 601	125-0002-02	RN2402
Q 701	125-2004-02	RN1402
Q 802	101-1243-00	2SB1243
Q 803	125-2004-02	RN1402
Q 804	100-1162-00	2SA1162
Q 805	103-1858-00	2SD1858
Q 806	100-1162-00	2SA1162
Q 807	125-2004-02	RN1402
Q 901	100-1162-00	2SA1162
D 201	001-0330-00	1SS119
D 202	001-0330-00	1SS119
D 301	001-0376-41	MTZ7.5JB
D 302	001-0376-26	MTZ4.7JB
D 303	001-0466-01	S5688G
D 306	001-0466-01	S5688G
D 306	001-0466-01	S5688G
D 307	001-0330-00	1SS119

REF No.	PART No.	DESCRIPTION
D 308	001-0330-00	1SS119
D 309	001-0330-00	1SS119
D 401	001-0376-32	MTZ5.6JB
D 402	001-0376-47	MTZ9.1JB
D 403	001-0330-00	1SS119
D 601	001-0592-00	RM4Z
D 602	001-0466-01	S5688G
D 603	001-0466-01	S5688G
D 604	001-0466-01	S5688G
D 605	001-0466-01	S5688G
D 606	001-0466-01	S5688G
D 607	001-0466-01	S5688G
D 608	001-0466-01	S5688G
D 609	001-0466-01	S5688G
D 610	001-0330-00	1SS119
D 701	001-0330-00	1SS119
D 702	001-0330-00	1SS119
D 801	001-0330-00	1SS119
D 802	001-7011-06	CL-150SR-CD
D 803	001-0377-10	MA4030L
D 804	001-0376-47	MTZ9.1JB
D 901	001-0330-00	1SS119
L 101	010-4007-00	5.6 μH
L 102	010-2230-38	220H
L 103	010-2230-31	56 μH
L 104	010-2230-38	220 μH
L 201	010-2230-38	220 μH
L 601	009-9006-50	CHOKE
L 701	010-2230-26	22 μH
L 801	010-2230-38	220 μH
L 803	010-2230-26	22 μH
L 804	010-2230-14	2.2 μH
X 201	061-3013-00	4.332MHz
X 801	061-1064-00	4.5MHz
C 101	176-1801-00	50V 18PF
C 102	178-1032-78	25V 0.01 μF
C 103	178-1032-78	25V 0.01 μF
C 104	178-1022-78	50V 1000PF
C 105	183-1073-22	10V 100 μF
C 106	183-1073-22	10V 100 μF
C 107	183-1073-22	10V 100 μF
C 108	176-1011-00	50V 100PF
C 109	178-3312-78	50V 330PF
C 110	178-1022-78	50V 1000PF
C 111	178-1522-78	50V 1500PF
C 112	183-1053-62	50V 1 μF
C 113	176-1011-00	50V 100PF
C 114	176-1011-00	50V 100PF
C 115	178-2232-78	25V 0.022 μF
C 116	178-2232-78	25V 0.022 μF
C 117	183-4753-62	50V 4.7 μF
C 118	178-2232-78	25V 0.022 μF

REF No.	PART No.	DESCRIPTION
C 120	178-5622-78	50V 5600PF
C 121	178-3332-78	25V 0.033 μF
C 122	178-1032-78	25V 0.01 μF
C 123	183-4743-62	50V 0.47 μF
C 124	042-9002-01	50V 3.3 μF (LN)
C 125	178-1232-78	25V 0.012 μF
C 126	178-1032-78	25V 0.01 μF
C 127	176-1007-00	50V 10PF
C 128	183-1073-22	10V 100 μF
C 129	183-1063-52	35V 10 μF
C 130	178-1032-78	25V 0.01 μF
C 131	178-1022-78	50V 1000PF
C 132	176-1011-00	50V 100PF
C 134	176-1007-00	50V 10PF
C 135	178-1022-78	50V 1000PF
C 136	178-1032-78	25V 0.01 μF
C 201	178-8212-78	50V 820PF
C 202	178-6812-78	50V 680PF
C 203	176-8201-00	50V 82PF
C 204	176-4701-00	50V 47PF
C 205	176-1007-00	50V 10PF
C 206	183-2253-62	50V 2.2 μF
C 207	183-4763-32	16V 47 μF
C 208	178-5612-78	50V 560PF
C 209	178-1022-78	50V 1000PF
C 211	178-2232-78	25V 0.022 μF
C 212	178-2232-78	25V 0.022 μF
C 213	178-1032-78	25V 0.01 μF
C 214	178-3312-78	50V 330PF
C 216	178-1042-78	25V 0.1 μF
C 302	172-1041-10	50V 0.1 μF
C 303	172-1031-10	50V 0.01 μF
C 305	183-1063-52	35V 10 μF
C 307	176-1007-00	50V 10PF
C 401	183-1073-22	10V 100 μF
C 402	183-1063-52	35V 10 μF
C 404	183-1073-22	10V 100 μF
C 405	183-1063-52	35V 10 μF
C 406	178-1532-78	25V 0.015 μF
C 407	178-1532-78	25V 0.015 μF
C 408	178-1022-78	50V 1000PF
C 409	178-1032-78	25V 0.01 μF
C 410	178-1022-78	50V 1000PF
C 411	178-1032-78	25V 0.01 μF
C 501	178-1042-78	25V 0.1 μF
C 502	178-1042-78	25V 0.1 μF
C 503	183-1053-62	50V 1 μF
C 504	183-1053-62	50V 1 μF
C 505	183-1053-62	50V 1 μF
C 506	183-1053-62	50V 1 μF
C 509	183-4763-32	16V 47 μF
C 510	182-1063-33	16V 10 μF

REF No.	PART No.	DESCRIPTION
C 511	182-1063-33	16V 10 μF
C 512	182-1063-33	16V 10 μF
C 513	182-1063-33	16V 10 μF
C 514	183-1063-52	35V 10 μF
C 515	178-1032-78	25V 0.01 μF
C 516	178-1022-78	50V 1000PF
C 520	176-2701-00	50V 27PF
C 521	178-1022-78	50V 1000PF
C 522	178-1022-78	50V 1000PF
C 523	178-4712-78	50V 470PF
C 601	172-2231-10	50V 0.022 μF
C 602	042-0447-00	16V 2200 μF
C 603	183-3353-62	50V 3.3 μF
C 604	183-4743-62	50V 0.47 μF
C 605	183-4763-32	16V 47 μF
C 606	182-4746-63	50V 0.47 μF
C 607	182-4746-63	50V 0.47 μF
C 608	182-4746-63	50V 0.47 μF
C 609	182-4746-63	50V 0.47 μF
C 611	172-1041-10	50V 0.1 μF
C 612	172-1041-10	50V 0.1 μF
C 613	172-1041-10	50V 0.1 μF
C 614	172-1041-10	50V 0.1 μF
C 701	178-4732-78	25V 0.047 μF
C 801	176-2201-00	50V 22PF
C 802	176-2201-00	50V 22PF
C 803	178-4732-78	25V 0.047 μF
C 804	178-4732-78	25V 0.047 μF
C 805	178-1032-78	25V 0.01 μF
C 806	183-4763-32	16V 47 μF
C 807	183-1073-22	10V 100 μF
C 808	178-1032-78	25V 0.01 μF
C 815	178-1042-78	25V 0.1 μF
C 816	178-1022-78	50V 1000PF
C 817	176-1011-00	50V 100PF
C 818	178-1032-78	25V 0.01 μF
C 820	178-4732-78	25V 0.047 μF
R 102	117-1021-10	1/10W 1KΩ
R 103	117-2731-10	1/10W 27KΩ
R 104	117-3311-10	1/10W 330Ω
R 105	117-4721-10	1/10W 4.7KΩ
R 106	117-1021-10	1/10W 1KΩ
R 107	117-3311-10	1/10W 330Ω
R 108	117-5631-10	1/10W 56KΩ
R 109	117-6821-10	1/10W 6.8KΩ
R 110	117-1021-10	1/10W 1KΩ
R 111	117-2221-10	1/10W 2.2KΩ
R 112	117-1021-10	1/10W 1KΩ
R 113	117-5631-10	1/10W 56KΩ
R 114	117-6821-10	1/10W 6.8KΩ
R 116	117-2221-10	1/10W 2.2KΩ

REF No.	PART No.	DESCRIPTION
R 117	117-1021-10	1/10W 1KΩ
R 203	117-2221-10	1/10W 2.2KΩ
R 205	117-3321-10	1/10W 3.3KΩ
R 206	117-3331-10	1/10W 33KΩ
R 207	117-1031-10	1/10W 10KΩ
R 208	117-1231-10	1/10W 12KΩ
R 211	117-2211-10	1/10W 220Ω
R 212	117-1041-10	1/10W 100KΩ
R 301	117-4731-10	1/10W 47KΩ
R 302	117-2231-10	1/10W 22KΩ
R 303	117-2231-10	1/10W 22KΩ
R 305	117-2231-10	1/10W 22KΩ
R 308	117-4721-10	1/10W 4.7KΩ
R 309	117-4721-10	1/10W 4.7KΩ
R 311	111-3321-91	1/4WSS 3.3KΩ
R 312	117-1031-10	1/10W 10KΩ
R 313	117-4721-10	1/10W 4.7KΩ
R 314	117-1031-10	1/10W 10KΩ
R 402	117-1041-10	1/10W 100KΩ
R 403	117-1041-10	1/10W 100KΩ
R 404	117-1041-10	1/10W 100KΩ
R 406	117-4731-10	1/10W 47KΩ
R 407	111-2291-91	1/4WSS 2.2Ω
R 408	111-2291-91	1/4WSS 2.2Ω
R 412	111-2211-91	1/4WSS 220Ω
R 413	111-1221-91	1/4WSS 1.2KΩ
R 414	117-4731-10	1/10W 47KΩ
R 415	111-4711-91	1/4WSS 470Ω
R 501	117-4721-10	1/10W 4.7KΩ
R 502	117-4721-10	1/10W 4.7KΩ
R 503	117-1021-10	1/10W 1KΩ
R 504	117-1021-10	1/10W 1KΩ
R 505	117-1031-10	1/10W 10KΩ
R 506	117-1031-10	1/10W 10KΩ
R 507	117-3311-10	1/10W 330Ω
R 508	117-3311-10	1/10W 330Ω
R 509	117-1021-10	1/10W 1KΩ
R 510	117-1021-10	1/10W 1KΩ
R 511	117-1031-10	1/10W 10KΩ
R 512	117-1031-10	1/10W 10KΩ
R 513	117-3311-10	1/10W 330Ω
R 514	117-3311-10	1/10W 330Ω
R 515	117-4721-10	1/10W 4.7KΩ
R 516	117-4721-10	1/10W 4.7KΩ
R 517	117-4721-10	1/10W 4.7KΩ
R 518	117-4721-10	1/10W 4.7KΩ
R 519	117-4721-10	1/10W 4.7KΩ
R 520	117-4721-10	1/10W 4.7KΩ
R 524	117-1031-10	1/10W 10KΩ
R 602	117-1031-10	1/10W 10KΩ
R 604	117-1231-10	1/10W 12KΩ

REF No.	PART No.	DESCRIPTION
R 605	117-4721-10	1/10W 4.7KΩ
R 606	117-4721-10	1/10W 4.7KΩ
R 607	117-4721-10	1/10W 4.7KΩ
R 608	117-4721-10	1/10W 4.7KΩ
R 610	117-4721-10	1/10W 4.7KΩ
R 701	117-4721-10	1/10W 4.7KΩ
R 702	117-4721-10	1/10W 4.7KΩ
R 703	117-1021-10	1/10W 1KΩ
R 704	117-4721-10	1/10W 4.7KΩ
R 705	117-1021-10	1/10W 1KΩ
R 706	117-4721-10	1/10W 4.7KΩ
R 707	117-1021-10	1/10W 1KΩ
R 708	111-1001-91	1/4WSS 10Ω
R 709	117-1031-10	1/10W 10KΩ
R 711	117-4731-10	1/10W 47KΩ
R 801	117-1041-10	1/10W 100KΩ
R 802	117-2221-10	1/10W 2.2KΩ
R 803	117-1031-10	1/10W 10KΩ
R 804	117-2221-10	1/10W 2.2KΩ
R 805	117-1031-10	1/10W 10KΩ
R 806	117-1031-10	1/10W 10KΩ
R 810	117-2231-10	1/10W 22KΩ
R 811	117-1021-10	1/10W 1KΩ
R 812	117-1021-10	1/10W 1KΩ
R 818	117-4731-10	1/10W 47KΩ
R 819	117-1041-10	1/10W 100KΩ
R 820	117-1041-10	1/10W 100KΩ
R 821	117-2221-10	1/10W 2.2KΩ
R 822	117-1031-10	1/10W 10KΩ
R 823	111-5611-91	1/4WSS 560Ω
R 824	111-1011-91	1/4WSS 100Ω
R 825	111-1011-91	1/4WSS 100Ω
R 826	117-1821-10	1/10W 1.8KΩ
R 827	117-1041-10	1/10W 100KΩ
R 829	111-4711-81	1/2WSS 470Ω
R 830	117-1031-10	1/10W 10KΩ
R 831	117-1021-10	1/10W 1KΩ
R 832	117-1031-10	1/10W 10KΩ
R 833	117-2231-10	1/10W 22KΩ
R 834	117-4731-10	1/10W 47KΩ
R 901	117-1031-10	1/10W 10KΩ
R 902	117-4721-10	1/10W 4.7KΩ
R 903	117-4731-10	1/10W 47KΩ
SUP101	060-0122-20	DSP-141N
VR 101	012-4738-13	470KΩ
CN 101	074-1198-68	OUTLET SOCKET
CN 102	074-1115-00	OUTLET SOCKET
CN 105	074-1126-10	OUTLET SOCKET
CN 106	074-0986-26	OUTLET SOCKET
S 301	013-6100-00	RESET SWITCH
FUSE	060-0057-57	15A

Switch PWB (B2) section

REF No.	PART No.	DESCRIPTION
IC 101	051-6013-00	LC75854W
D 101	001-0529-41	MA8075M
D 102	001-0529-41	MA8075M
D 103	001-7046-00	NSPW310BS
D 104	001-7046-00	NSPW310BS
C 101	178-4732-78	25V 0.047 μF
C 102	178-4732-78	25V 0.047 μF
C 103	178-1022-78	50V 1000PF
C 104	178-4732-78	25V 0.047 μF
C 105	042-0416-51	6.3V 10 μF
R 101	117-2221-10	1/10W 2.2KΩ
R 102	117-2221-10	1/10W 2.2KΩ
R 103	117-2221-10	1/10W 2.2KΩ
R 104	117-4731-10	1/10W 47KΩ
R 105	117-1031-10	1/10W 10KΩ
R 106	117-3921-10	1/10W 3.9KΩ
R 107	117-1241-10	1/10W 120KΩ

REF No.	PART No.	DESCRIPTION
R 108	032-0092-80	1/10W 330Ω 1%
R 109	032-0092-80	1/10W 330Ω 1%
R 110	032-0092-80	1/10W 330Ω 1%
R 111	032-0092-80	1/10W 330Ω 1%
R 112	117-1021-10	1/10W 1KΩ
R 113	117-1011-10	1/10W 100Ω
R 114	117-1021-10	1/10W 1KΩ
CN 101	076-0535-01	PLUG
PL 101	017-0444-00	14V 50MA
PL 102	017-0444-00	14V 50MA
PL 103	017-0444-00	14V 50MA
PL 104	017-0444-00	14V 50MA
PL 105	017-0444-00	14V 50MA
S 101	013-6001-50	SKQCAB
S 102	013-6305-00	SKQMAH
S 103	013-6305-00	SKQMAH
S 104	013-6001-50	SKQCAB

REF No.	PART No.	DESCRIPTION
S 105	013-6001-50	SKQCAB
S 106	013-6001-50	SKQCAB
S 107	013-6305-00	SKQMAH
S 108	013-6305-00	SKQMAH
S 109	013-6001-50	SKQCAB
S 110	013-6001-50	SKQCAB
S 111	013-6305-00	SKQMAH
S 112	013-6305-00	SKQMAH
S 113	013-6305-00	SKQMAH
S 114	013-6001-50	SKQCAB
S 115	013-6305-00	SKQMAH
S 116	013-6305-00	SKQMAH
S 117	013-6305-00	SKQMAH
S 118	016-9900-66	SIM-026MT
S 119	013-6511-50	LS9J2M-1SR-T
S 120	013-6305-00	SKQMAH
IR 101	060-4008-00	RS-171

■ CIRCUIT DIAGRAM:

Switch PWB (B2) section

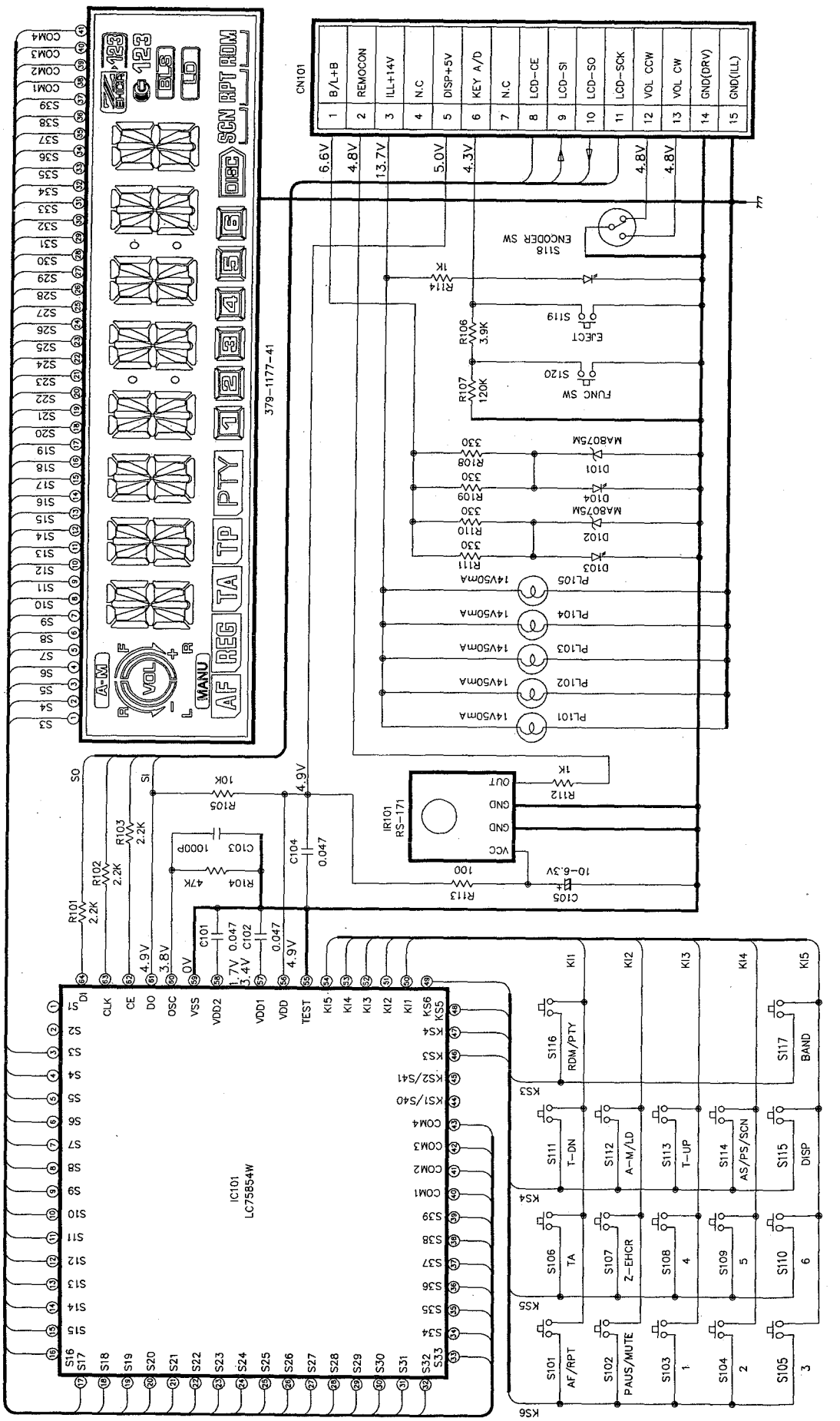

■ PRINTED WIRING BOARD:

Switch PWB (B2) section

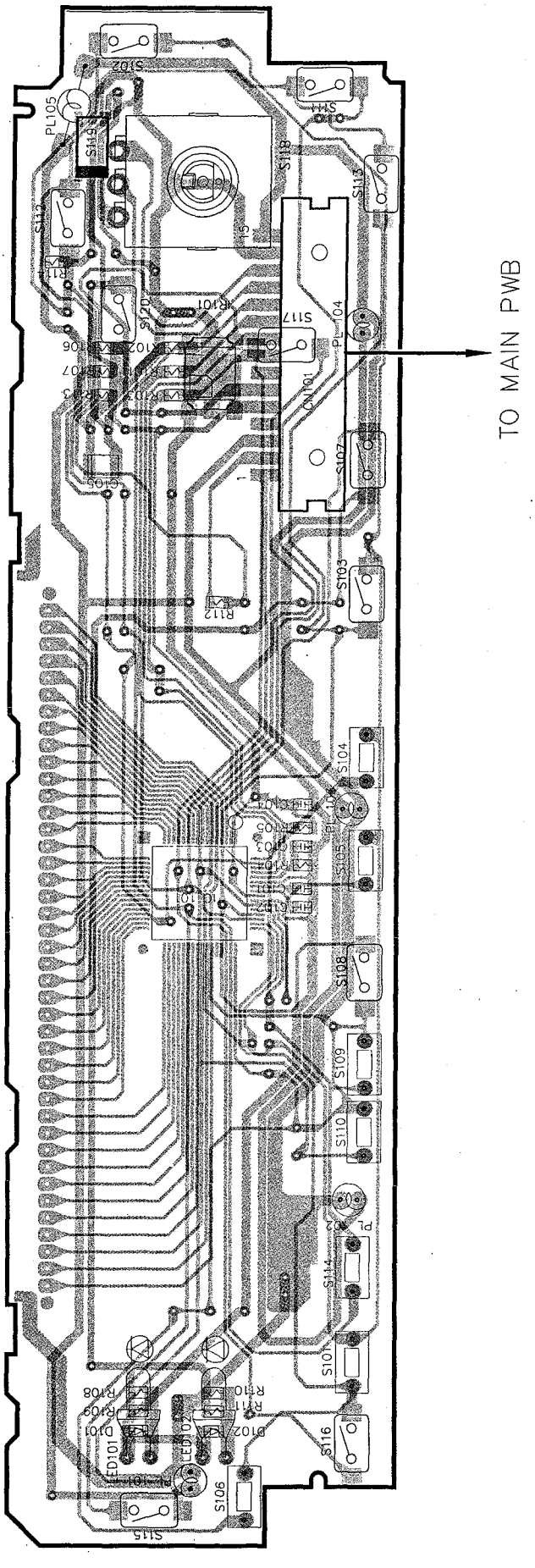

■ CIRCUIT DIAGRAM:

Main PWB (B1) section

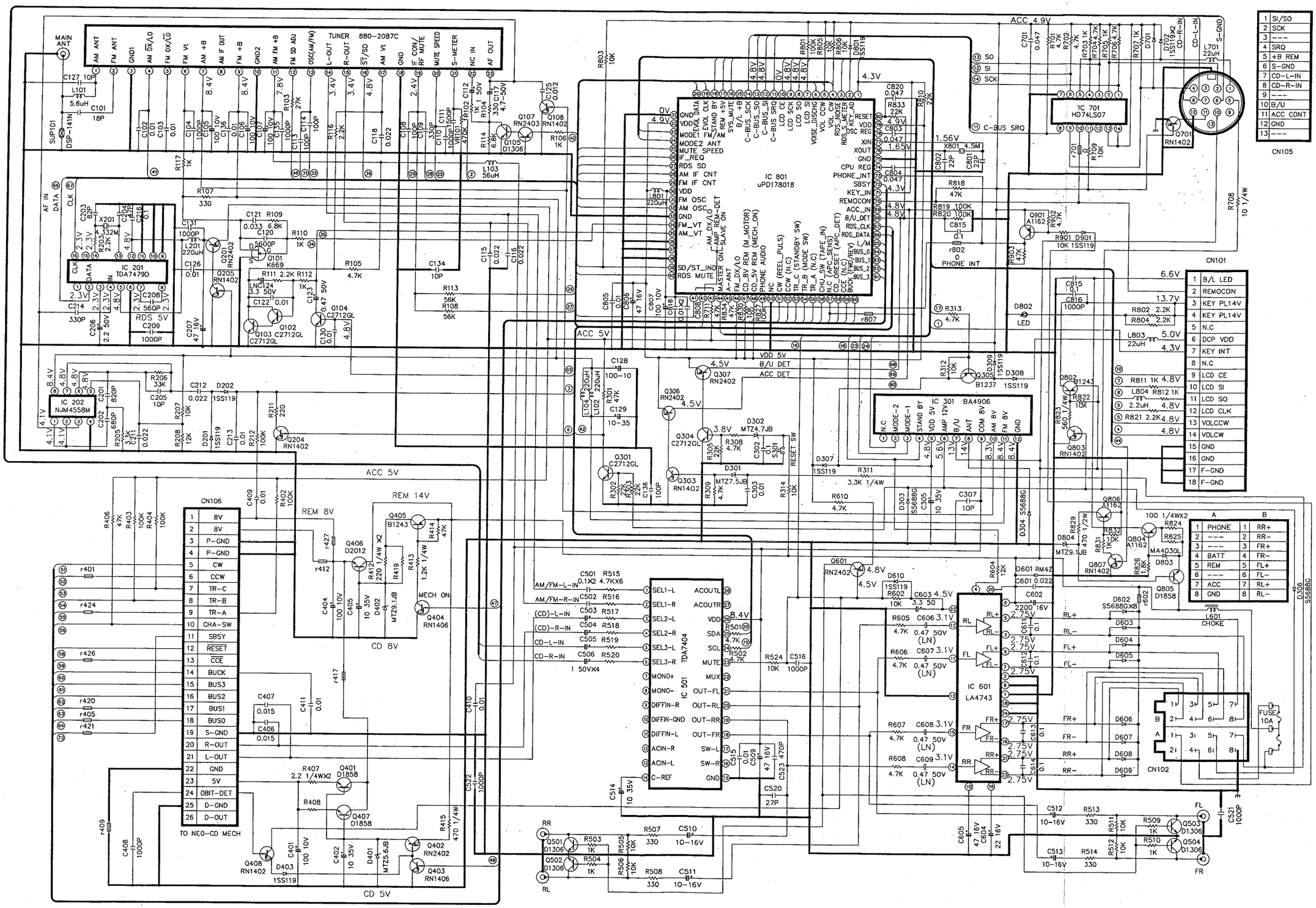

■ PRINTED WIRING BOARD:

Main PWB (B1) section

C-BUS LINE

CASE	SHIELD
1	SO/SI
2	SCK
3	---------
4	SRQ
5	+B REM
6	S-GND

C-BUS LINE

7	Lch-IN
8	Rch-IN
9	--------
10	B/U
11	ACC COUT
12	GND
13	--------

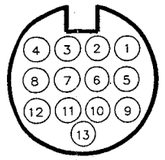

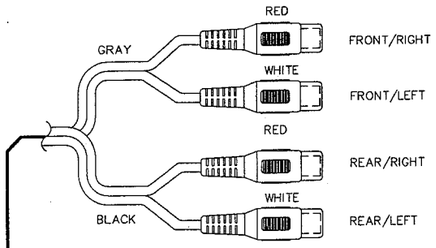

RCA LINE OUT
855-5428-50

ISO PWB (B3) section

092-9000-41

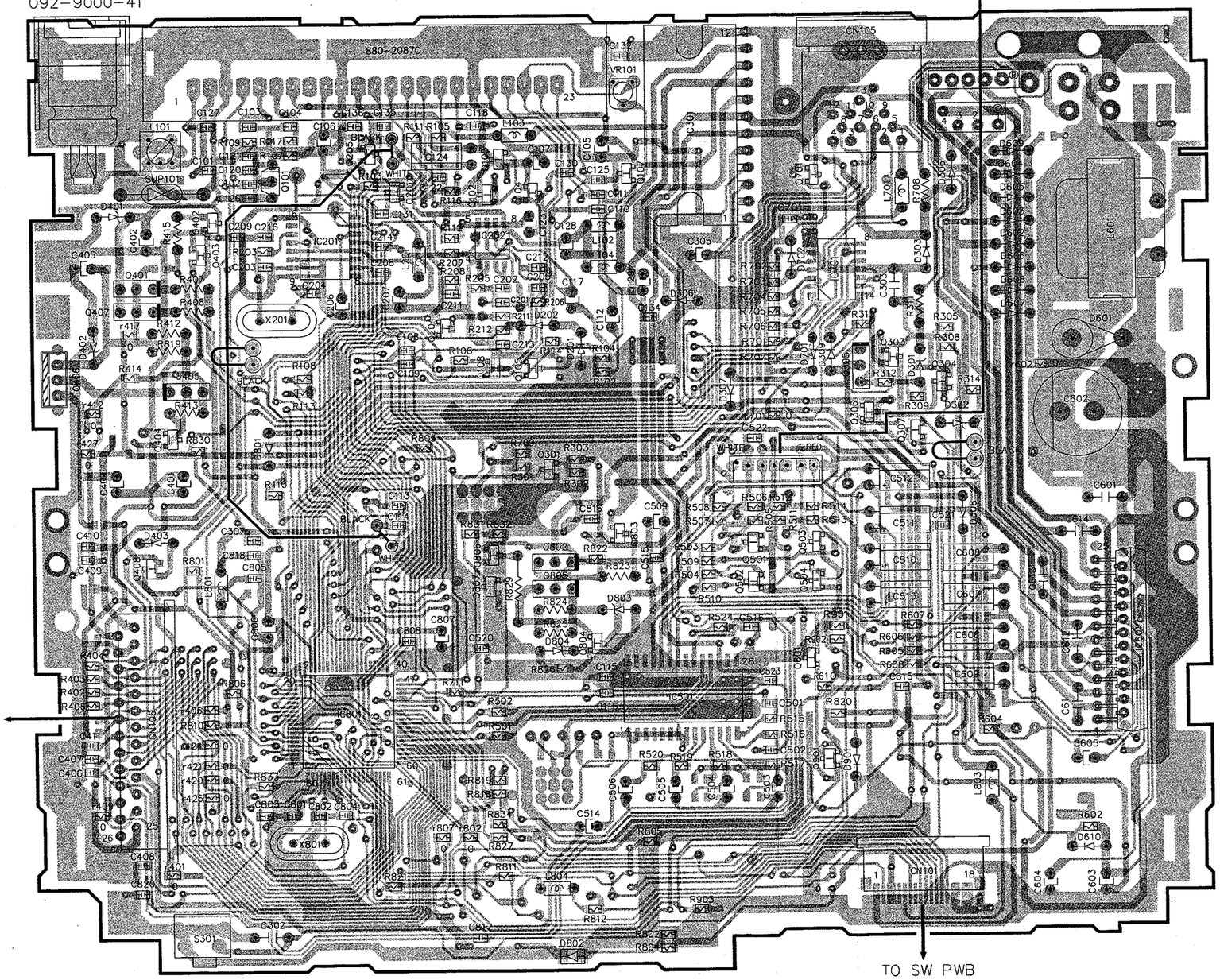

ISO PWB (B3) section

Ⓒ TO MAIN PWB

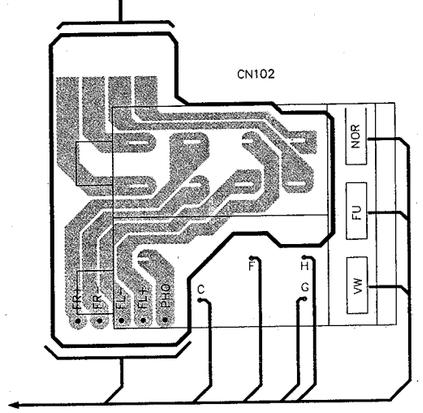

Ⓑ TO MAIN PWB

16P OUTLET SOCKET

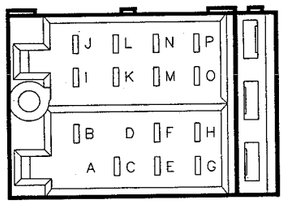

	A		B
A	---	I	RR⊖
B	PHONE	J	RR⊕
C	BATT	K	FR⊖
D	---	L	FR⊕
E	---	M	FL⊖
F	REM	N	FL⊕
G	GND	O	RL⊖
H	ACC	P	RL⊕

■ EXPLODED VIEW:

CD mechanism section 929-0092-80(BB-CD)

Drive unit section

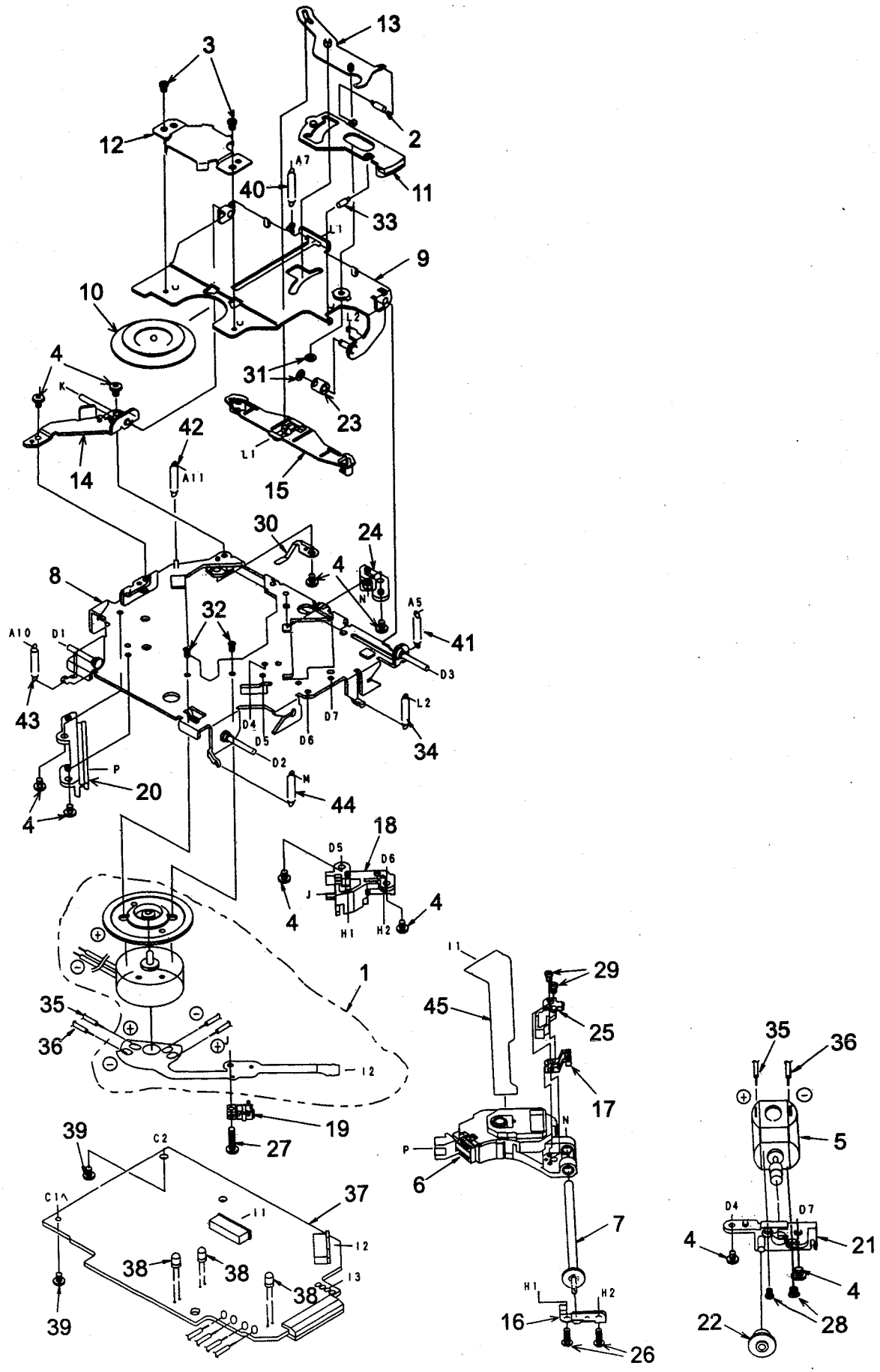

■ PARTS LIST:

Note) Several different parts of the same reference number are alternative parts.
One of those parts is used in the set.

Drive unit section

NO.	PARTS NO.	DESCRIPTION	QTY
1	SMA-151-100	MOTOR ASSY (SPINDLE)	1
2	750-3098-00	L-LINK SPRING	1
3	716-1468-00	SCREW (M2×2.5)	2
4	716-2003-81	SCREW (M2×3)	10
5	SMA-146-100	MOTOR ASSY (SLED)	1
6	969-0008-00	PICK UP UNIT	1
7	HBS-432-100	LS-GEAR ASSY	1
8	966-0447-05	DR-PLATE-ASSY	1
9	966-0449-22	CLAMP-LINK-ASSY	1
10	621-0205-02	CLAMPER RING	1
11	621-0251-03	LOCK LINK	1
12	620-0198-03	CLAMPER PLATE	1
13	966-0314-01	STOP LINK-ASSY	1
14	966-0448-21	SIDE PLATE-ASSY	1
15	621-0252-03	DISC STOPPER	1
16	620-0491-03	SPRING PLATE	1
17	966-0454-00	SCREW H-RACK-ASSY	1
18	621-0358-02	LS-HOLDER-F	1
19	013-7100-00	SWITCH (LIMIT)	1
20	621-0357-03	PICK UP GUIDE	1
21	621-0253-02	MOTOR HOLDER	1
22	621-0255-02	SECOND GEAR	1
23	622-1073-02	CLAMPER ROLLER	1
24	621-0359-02	LS-HOLDER-R	1

NO.	PARTS NO.	DESCRIPTION	QTY
25	621-0375-00	SH-BASE	1
26	716-0675-00	SCREW (M2×5.5)	2
27	716-1555-00	WAVE SCREW (φ2×8)	1
28	732-2004-11	SEMS SCREW (M2×4)	2
29	739-1735-17	PRECISION SCREW (M1.7×3.5)	2
30	620-0690-01	RATTLE PLATE	1
31	746-0761-00	WASHER	2
32	716-1733-00	SCREW (M1.7×2.3)	2
33	750-3099-00	ES-SPRING	1
34	750-3097-03	CLAMPER SPRING	1
35	816-2373-00	LEAD WIRE (WHT)	1
36	816-2372-00	LEAD WIRE (BLU)	1
37	039-1576-00	CD PWB (WITHOUT COMPONENT)	1
38	001-0563-00	LED	3
39	716-1670-00	SCREW (M2×4)	2
40	750-3202-00	CENTER SPRING-B	1
41	750-3096-01	DR-SPRING R	1
42	750-3164-00	DR-SPRING LR	1
43	750-3188-00	DR-SPRING F-B	1
44	750-3201-00	DR-SPRING F-R	1
45	039-1587-00	FPC (WITHOUT COMPONENT)	1

MECH chassis section

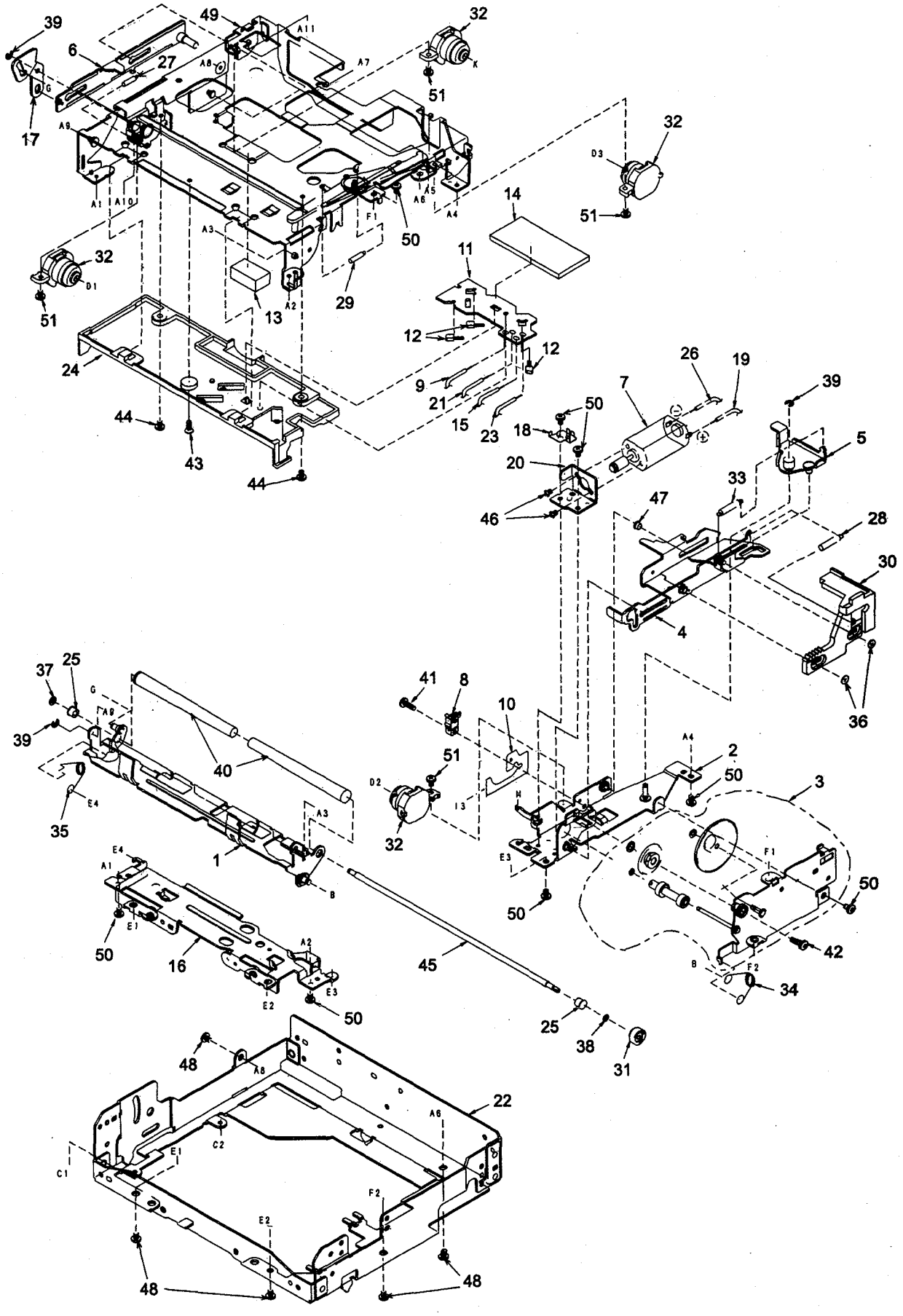

MECH chassis section

NO.	PARTS NO.	DESCRIPTION	QTY
1	966-0309-04	L-DISC-G-ASSY	1
2	966-0310-06	SHIFT-P-CH-ASSY	1
3	HBS-430-100	GEAR PLATE ASSY	1
4	966-0312-06	SHIFT-PLATE-ASSY	1
5	966-0358-01	DRIVE-L-PLATE-ASSY	1
6	966-0359-03	SIDE-L-PLATE-ASSY	1
7	SMA-147-100	MOTOR ASSY (LOADING)	1
8	013-3879-01	CHUCKING SWITCH	1
9	804-4910-60	VINYL-COAT-WIRE (YEL)	1
10	039-0586-01	CHUCKING SWITCH PWB (WITHOUT COMPONENT)	1
11	039-0588-01	SENSOR PWB (WITHOUT COMPONENT)	1
12	060-0252-01	PHOTO-TR	3
13	345-7513-01	CLAMPER SHEET	1
14	345-7514-00	SENSOR PWB SHEET	1
15	802-4910-60	VINYL-COAT-WIRE (RED)	1
16	620-0485-04	FRONT PLATE	1
17	620-0488-01	S-L-LINK PLATE	1
18	620-0489-02	MOTOR PLATE	1
19	802-4904-60	VINYL-COAT-WIRE (RED)	1
20	620-0492-01	MOTOR BRACKET	1
21	801-4910-60	VINYL-COAT-WIRE (BRN)	1
22	620-0773-01	CD-MECH-BRKT	1
23	800-4910-60	VINY-COAT-WIRE (BLK)	1
24	621-0402-01	U-DISC GUIDE-F	1
25	621-0243-02	ROLLER SLEEVE	2

NO.	PARTS NO.	DESCRIPTION	QTY
26	800-4904-60	VINYL-COAT-WIRE (BLK)	1
27	750-3189-00	SIDE-L-SPRING	1
28	750-3098-00	L-LINK SPRING	1
29	750-3094-00	S-ARM SPRING	1
30	621-0248-07	RACK GEAR	1
31	621-0249-02	ROLLER GEAR	1
32	629-0074-00	DAMPER	4
33	750-3092-03	SHIFT SPRING	1
34	750-3091-03	LOADING-SPRING-R	1
35	750-3090-02	LOADING-SPRING-L	1
36	746-0877-02	WASHER	2
37	746-0762-00	WASHER	1
38	746-0712-03	WASHER	1
39	743-1500-10	E-RING	3
40	621-0258-03	LOADING ROLLER	2
41	716-1742-00	SCREW (M2×5)	1
42	716-1704-00	SCREW (M2×7)	1
43	716-1677-00	SCREW (M2×5)	1
44	716-1507-00	SCREW (M2×3)	2
45	622-1072-05	ROLLER SHAFT	1
46	716-1468-00	SCREW (M2×2.5)	2
47	622-1219-01	SHIFT ROLLER	1
48	714-2603-81	SCREW (M2.6×3)	5
49	966-0308-10	CHASSIS ASSY	1
50	714-2003-81	SCREW (M2×3)	8
51	716-1670-00	SCREW (M2×4)	4

■ ELECTRICAL PARTS LIST:

CD mechanism section (B3)

Note)Several different parts of the same reference number are alternative parts.
One of those parts is used in the set.

REF No.	PART No.	DESCRIPTION
C1	163-1073-10	6.3V 100 μ F
C3	178-1042-78	0.1 μ F
C4	178-2222-78	2200pF
C5	178-1042-78	0.1 μ F
C6	178-1042-78	0.1 μ F
C7	178-1042-78	0.1 μ F
C8	176-1501-00	15pF CH
C9	176-1501-00	15pF CH
C10	176-1201-00	12pF CH
C11	178-1042-78	0.1 μ F
C13	178-1042-78	0.1 μ F
C14	178-1042-78	0.1 μ F
C15	178-1042-78	0.1 μ F
C16	178-1042-78	0.1 μ F
C17	163-1073-31	16V 100 μ F
C18	176-4701-00	47pF CH
C19	178-1532-78	0.015 μ F
C20	178-1032-78	0.01 μ F
C21	178-2722-78	2700pF
C22	178-4722-78	4700pF
C23	178-1042-78	0.1 μ F
C24	178-1042-78	0.1 μ F
C25	178-1042-78	0.1 μ F
C26	178-4712-78	470pF
C27	178-4712-78	470pF
C28	178-4732-78	0.047 μ F
C29	178-4732-78	0.047 μ F
C30	178-4732-78	0.047 μ F
C31	178-4732-78	0.047 μ F
C32	163-4763-05	4V 47 μ F
C33	163-4763-05	4V 47 μ F
C34	176-1801-00	18pF CH
C35	176-6097-00	6pF CH

REF No.	PART No.	DESCRIPTION
C36	176-6801-00	68pF CH
C37	176-2201-00	22pF CH
C38	178-1042-78	0.1 μ F
C39	163-4763-05	4V 47 μ F
C44	178-2242-78	0.22 μ F
C45	178-2242-78	0.22 μ F
C46	163-4763-10	6.3V 47 μ F
C47	178-8222-78	8200pF
C48	178-1042-78	0.1 μ F
C50	163-1073-10	6.3V 100 μ F
C51	178-1042-78	0.1 μ F
C52	178-2232-78	0.022 μ F
C54	176-2201-00	22pF CH
C61	178-1042-78	0.1 μ F
C63	178-1042-78	0.1 μ F
C64	178-1042-78	0.1 μ F
C65	178-1042-78	0.1 μ F
D4	001-0516-00	MA111
IC1	051-5704-00	TA2096FN
IC2	051-6342-00	TC9462F
IC3	051-6045-08	BA5984FP
J1	074-1138-66	16P
J2	074-1138-06	6P
L1	010-2155-93	10 μ H
L3	010-2199-74	10 μ H J
Q1	101-1188-50	2SB1188PQR
R1	117-2211-10	1/10W 220 Ω
R2	117-2211-10	1/10W 220 Ω
R3	117-5611-10	1/10W 560 Ω
R4	117-5611-10	1/10W 560 Ω
R5	117-4711-10	1/10W 470 Ω
R6	117-3311-10	1/10W 330 Ω
R7	117-4721-10	1/10W 4.7K Ω

REF No.	PART No.	DESCRIPTION
R8	117-1041-10	1/10W 100K Ω
R9	117-1031-10	1/10W 10K Ω
R10	117-4731-10	1/10W 47K Ω
R12	117-4741-10	1/10W 470K Ω
R13	117-3331-10	1/10W 33K Ω
R14	117-3321-10	1/10W 3.3K Ω
R15	117-1031-10	1/10W 10K Ω
R16	117-3321-10	1/10W 3.3K Ω
R17	117-3321-10	1/10W 3.3K Ω
R18	117-3321-10	1/10W 3.3K Ω
R19	117-3321-10	1/10W 3.3K Ω
R20	117-3321-10	1/10W 3.3K Ω
R21	117-2221-10	1/10W 2.2K Ω
R22	117-8211-10	1/10W 820K Ω
R23	117-9131-10	1/10W 91K Ω
R24	117-1041-10	1/10W 100K Ω
R25	117-1041-10	1/10W 100K Ω
R26	117-1841-10	1/10W 180K Ω
R27	117-1841-10	1/10W 180K Ω
R28	117-2211-10	1/10W 220 Ω
R29	117-2201-10	1/10W 22 Ω
R30	117-1041-10	1/10W 100K Ω
R31	117-1041-10	1/10W 100K Ω
R32	117-1041-10	1/10W 100K Ω
R33	117-1041-10	1/10W 100K Ω
R34	117-1041-10	1/10W 100K Ω
R35	117-2241-10	1/10W 220K Ω
R36	117-1041-10	1/10W 100K Ω
R37	117-1041-10	1/10W 100K Ω
R38	117-8231-10	1/10W 82K Ω
R39	117-1841-10	1/10W 180K Ω
X1	061-3500-90	16.920MHz

Sensor PWB section (B4)

REF No.	PART No.	DESCRIPTION
Q101	060-0252-01	PT4850F

REF No.	PART No.	DESCRIPTION
Q102	060-0252-01	PT4850F

REF No.	PART No.	DESCRIPTION
Q103	060-0252-01	PT4850F

Chucking SW PWB section (B5)

REF No.	PART No.	DESCRIPTION
S2	013-3879-01	SPPB12

Limit SW PWB section (B6)

REF No.	PART No.	DESCRIPTION
S1	013-7100-00	SPPB11

■ PRINTED WIRING BOARD:

CD mechanism section 929-0092-80(BB-CD)

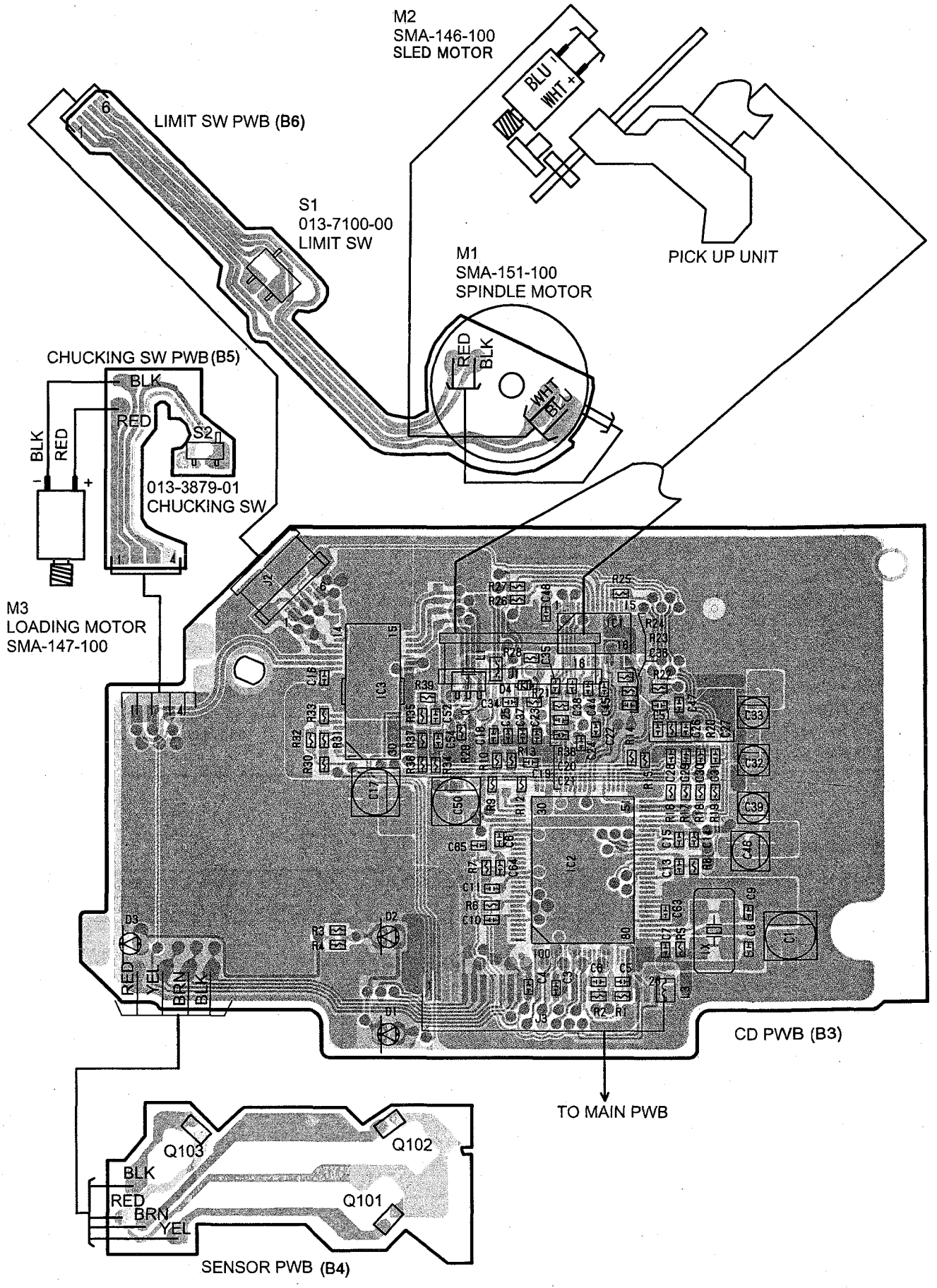

DRX5675R

■ CIRCUIT DIAGRAM:

CD mechanism section 929-0092-80(BB-CD)

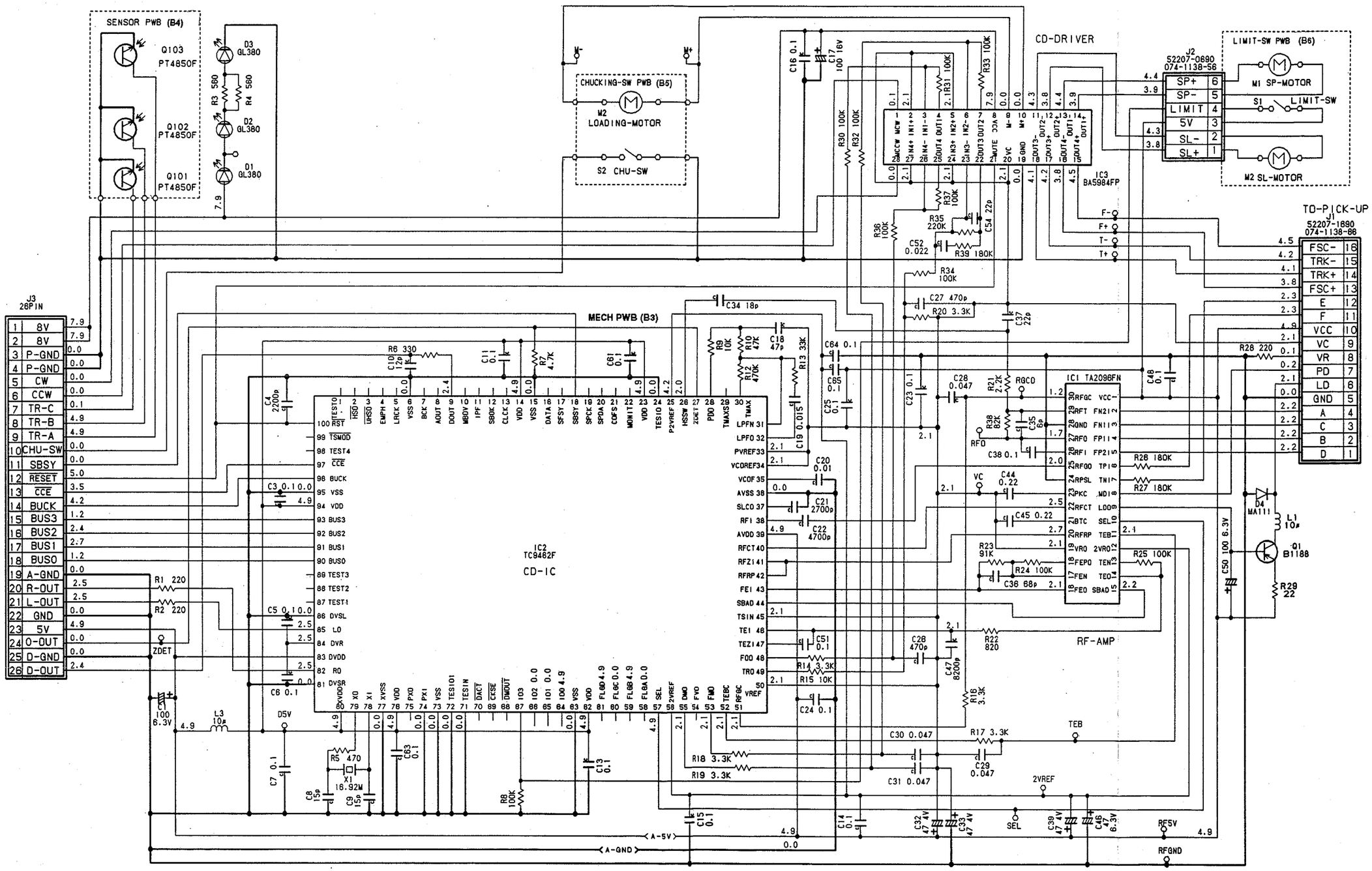

DRX5675R